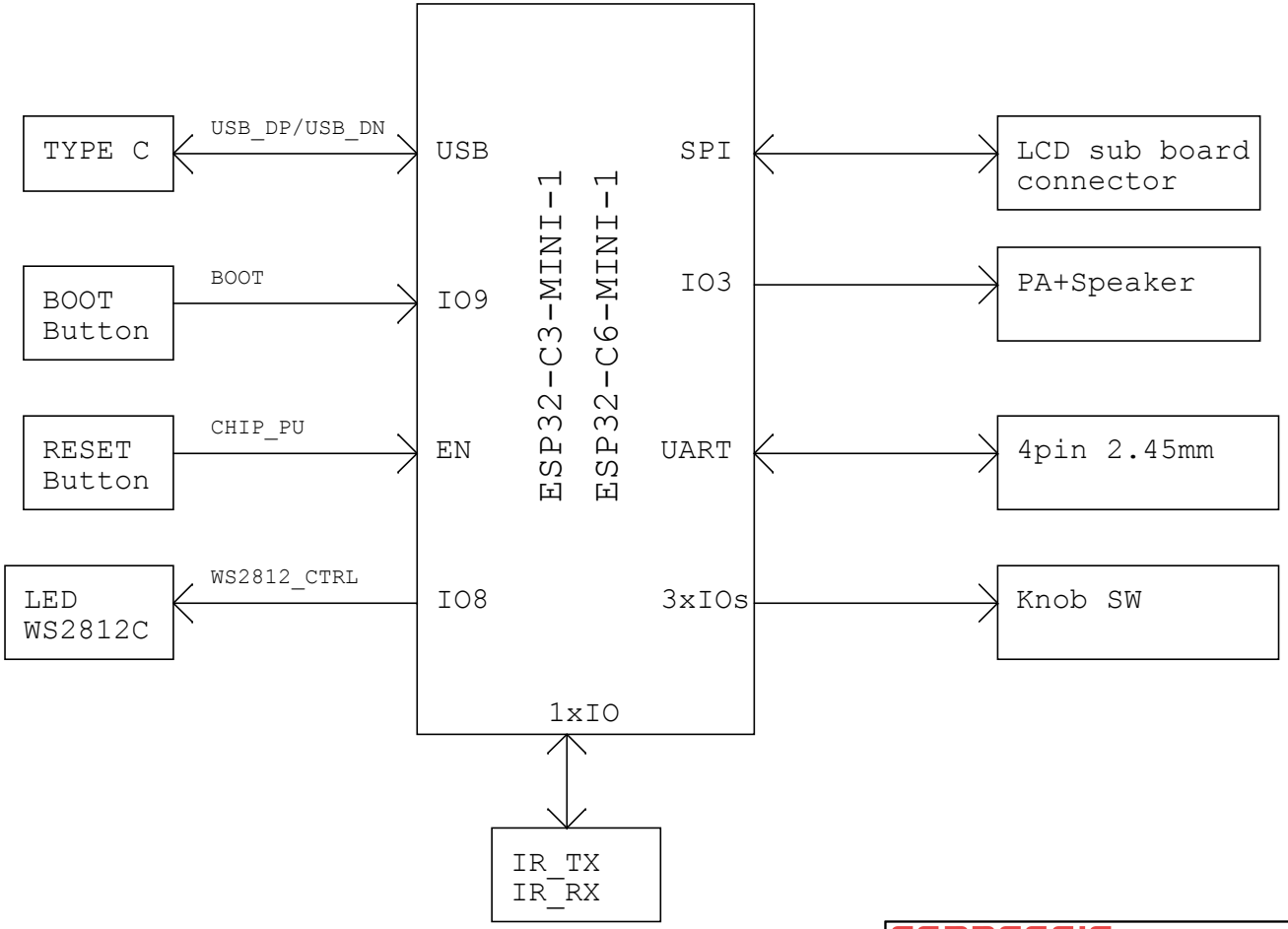

ESPRESSIF

乐鑫信息科技（上海）股份有限公司

Title	ESP32-C3-C6-LCDkit-MB		
Size A	Page Name Overview	Rev 1.1	Proprietary
Date: Tuesday, April 18, 2023		Sheet 1 of 2	

USB

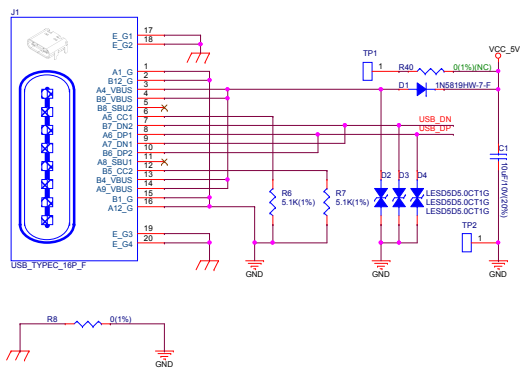

MCU

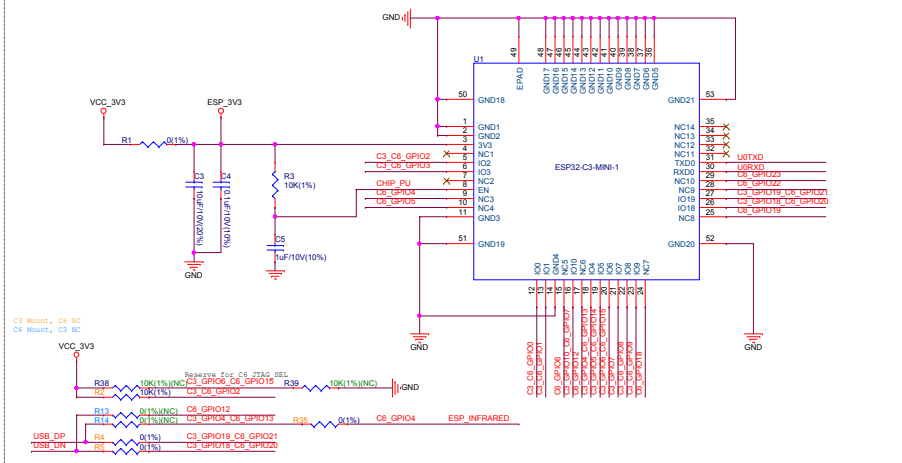

PIN Number	ESP32-C3-MINI-1	ESP32-C6-MINI-1
1,2,11,14,36~53	GND	GND
3	3V3	3V3
4,7,32~35	NC	NC
5	IO2	IO2
6	IO3	IO3
8	EN	EN
9	NC	IO4
10	NC	IO5
12	IO0	IO0
13	IO1	IO1
15	NC	IO6
16	IO10	IO7
17	NC	IO12
18	IO4	IO13
19	IO5	IO14
20	IO6	IO15
21	IO7	NC
22	IO8	IO8
23	IO9	IO9
24	NC	IO18
25	NC	IO19
26	IO18	IO20
27	IO19	IO21
28	NC	IO22
29	NC	IO23
30	RXD0	RXD0
31	TXD0	TXD0

3V3 LDO

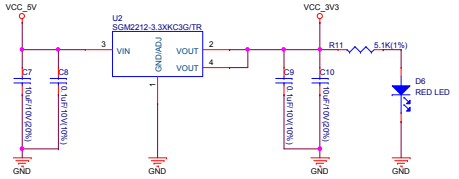

RGB LED

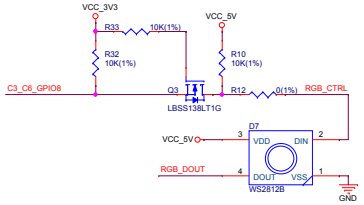

UART&RGB Connector

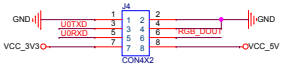

Mounting Holes

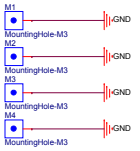

BUTTON

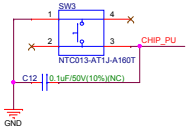

KNOB SW

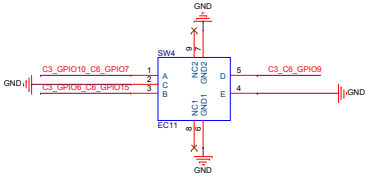

IR Receiver

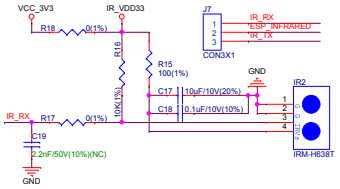

IR Transmitter

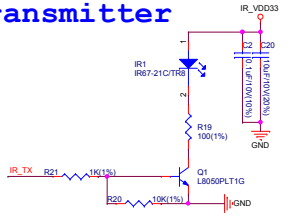

SPI LCD Connector

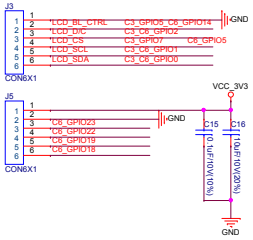

PA&Speaker

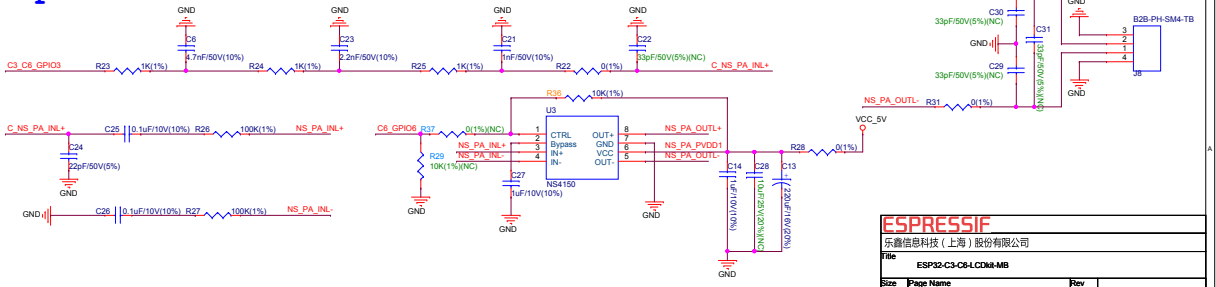

ESPRESSIF

乐鑫信息科技（上海）股份有限公司

Title			
ESP32-C3-C6-LCDkit-MB			
Size C	Page Name Module	Rev 1.1	Proprietary
Date: Tuesday, April 18, 2023		Sheet 2 of 2	