Hardware Block:

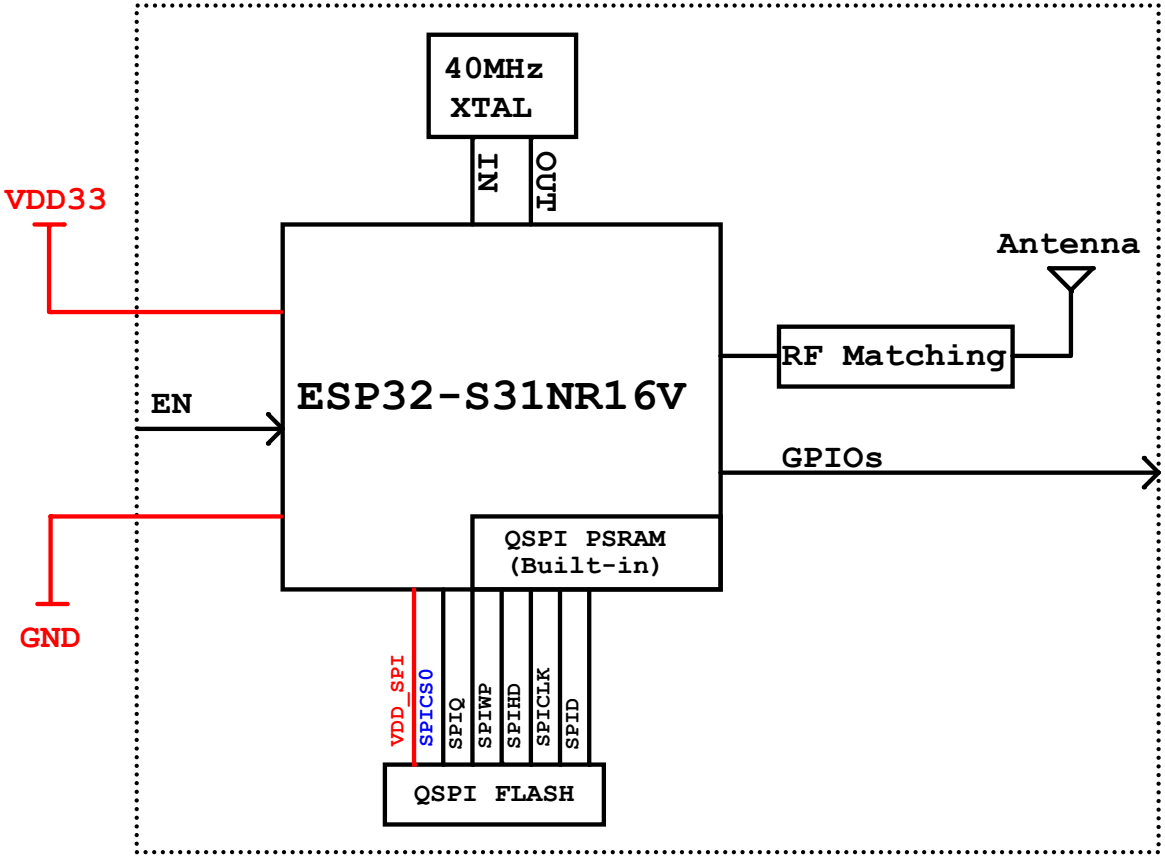

ESPRESSIF			
乐鑫信息科技（上海）股份有限公司			
Title: ESP32-S31-WROOM-3			
Size: B	Page Name: <01_Block_Diagram>	Rev: 1.2	Confidential and Proprietary
Date: Friday, August 14, 2026		Sheet 1 of 2	

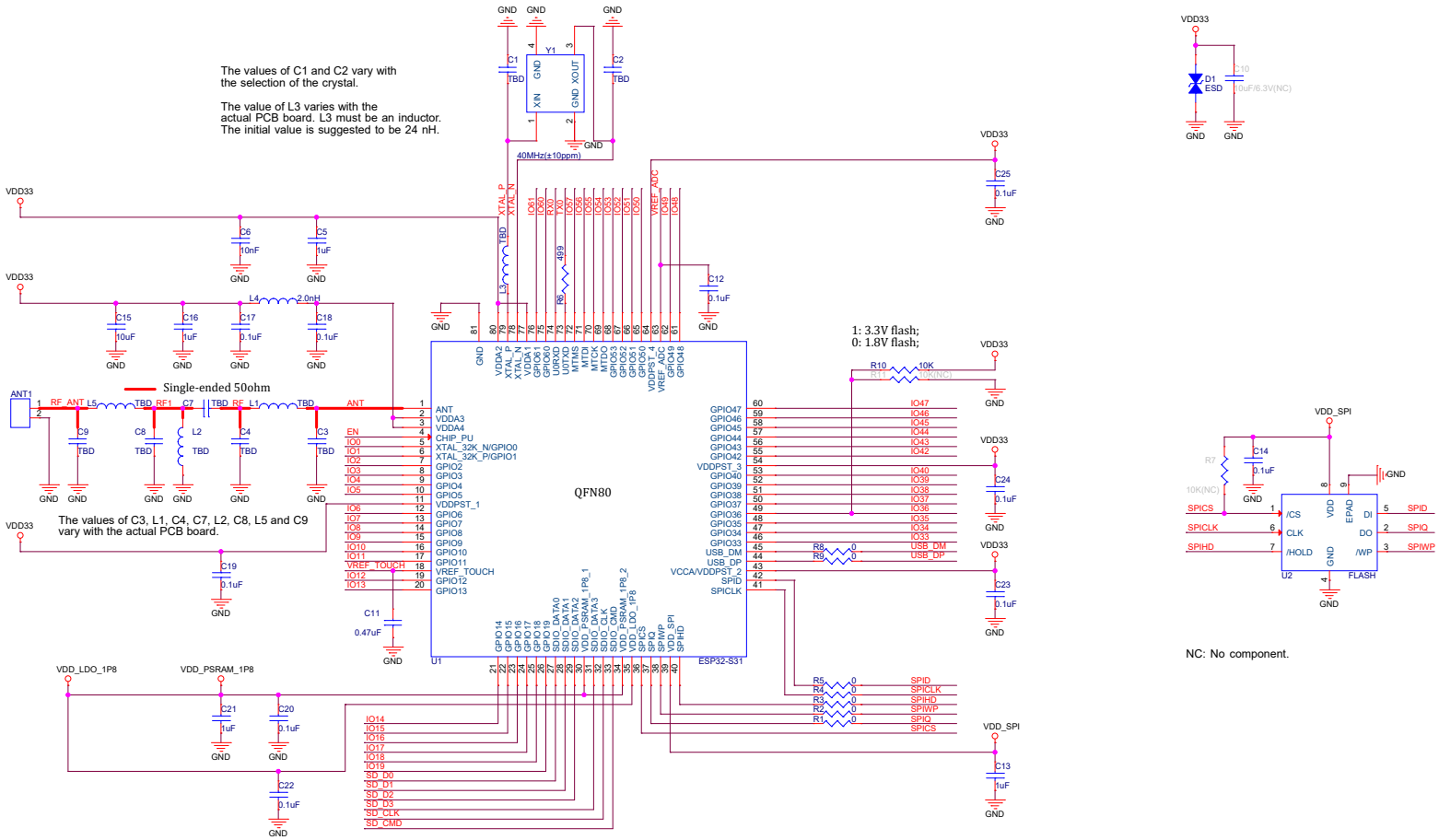

NC: No component.

ESPRESSIF			
乐鑫信息科技（上海）股份有限公司			
Title	ESP32-S31-WROOM-3		
Size C	Page Name <02_ESP32-S31-WROOM-3>	Rev 1.2	Confidential and Proprietary
Date: Friday, August 14, 2026		Sheet 2 of 2	