ESP32

ESP-IDF Programming Guide

Release v4.4.3
Espressif Systems
Nov 08, 2022

Table of contents

Table of contents i

1 Get Started 3
- 1.1 Introduction . . . 3
- 1.2 What You Need . . . 3
- 1.3 Development Board Overviews . . . 4
  - 1.3.1 ESP32-DevKitC V4 Getting Started Guide . . . 4
  - 1.3.2 ESP-WROVER-KIT V4.1 Getting Started Guide . . . 11
  - 1.3.3 ESP32-PICO-KIT V4 / V4.1 Getting Started Guide . . . 34
  - 1.3.4 ESP32-Ethernet-Kit V1.2 Getting Started Guide . . . 44
  - 1.3.5 ESP32-DevKitS(-R) . . . 71
  - 1.3.6 ESP32-PICO-KIT-1 . . . 77
  - 1.3.7 ESP32-PICO-DevKitM-2 . . . 83
  - 1.3.8 ESP32-DevKitM-1 . . . 89
- 1.4 Installation Step by Step . . . 93
  - 1.4.1 Setting up Development Environment . . . 93
  - 1.4.2 Creating Your First Project . . . 93
- 1.5 Step 1. Install prerequisites . . . 94
  - 1.5.1 Standard Setup of Toolchain for Windows . . . 94
  - 1.5.2 Standard Setup of Toolchain for Linux . . . 98
  - 1.5.3 Standard Setup of Toolchain for Mac OS . . . 99
- 1.6 Step 2. Get ESP-IDF . . . 101
  - 1.6.1 Linux and macOS . . . 101
  - 1.6.2 Windows . . . 101
- 1.7 Step 3. Set up the tools . . . 101
  - 1.7.1 Windows . . . 102
  - 1.7.2 Linux and macOS . . . 102
  - 1.7.3 Alternative File Downloads . . . 102
  - 1.7.4 Customizing the tools installation path . . . 103
- 1.8 Step 4. Set up the environment variables . . . 103
  - 1.8.1 Windows . . . 103
  - 1.8.2 Linux and macOS . . . 103
- 1.9 Step 5. Start a Project . . . 104
  - 1.9.1 Linux and macOS . . . 104
  - 1.9.2 Windows . . . 104
- 1.10 Step 6. Connect Your Device . . . 104
- 1.11 Step 7. Configure . . . 104
  - 1.11.1 Linux and macOS . . . 104
  - 1.11.2 Windows . . . 105
- 1.12 Step 8. Build the Project . . . 105
- 1.13 Step 9. Flash onto the Device . . . 106
  - 1.13.1 Encountered Issues While Flashing? . . . 106
  - 1.13.2 Normal Operation . . . 107
- 1.14 Step 10. Monitor . . . 108
- 1.15 Updating ESP-IDF . . . 109
- 1.16 Related Documents . . . 109

1.16.1 Establish Serial Connection with ESP32 . . . 109
1.16.2 Build and Flash with Eclipse IDE . . . 115
1.16.3 Getting Started with VS Code IDE . . . 116
1.16.4 IDF Monitor . . . 117
1.16.5 Customized Setup of Toolchain . . . 120
1.16.6 Get Started (Legacy GNU Make) . . . 126

2 API Reference **151**
2.1 Bluetooth API . . . 151
2.1.1 Controller && VHCI . . . 151
2.1.2 BT COMMON . . . 160
2.1.3 BT LE . . . 166
2.1.4 CLASSIC BT . . . 288
2.1.5 NimBLE-based host APIs . . . 380
2.1.6 ESP-BLE-MESH . . . 383
2.2 Networking APIs . . . 666
2.2.1 Wi-Fi . . . 666
2.2.2 Ethernet . . . 769
2.2.3 Thread . . . 796
2.2.4 IP Network Layer . . . 802
2.2.5 Application Layer . . . 821
2.3 Peripherals API . . . 821
2.3.1 Analog to Digital Converter (ADC) . . . 821
2.3.2 Digital To Analog Converter (DAC) . . . 845
2.3.3 General Purpose Timer . . . 848
2.3.4 GPIO & RTC GPIO . . . 859
2.3.5 Inter-Integrated Circuit (I2C) . . . 881
2.3.6 Inter-IC Sound (I2S) . . . 898
2.3.7 LCD . . . 915
2.3.8 LED Control (LEDC) . . . 928
2.3.9 Motor Control Pulse Width Modulator (MCPWM) . . . 946
2.3.10 Pulse Counter (PCNT) . . . 974
2.3.11 Remote Control (RMT) . . . 985
2.3.12 SD Pull-up Requirements . . . 1004
2.3.13 SDMMC Host Driver . . . 1008
2.3.14 SD SPI Host Driver . . . 1014
2.3.15 SDIO Card Slave Driver . . . 1018
2.3.16 Sigma-delta Modulation . . . 1029
2.3.17 SPI Master Driver . . . 1032
2.3.18 SPI Slave Driver . . . 1057
2.3.19 ESP32-WROOM-32SE (Secure Element) . . . 1064
2.3.20 Touch Sensor . . . 1065
2.3.21 Two-Wire Automotive Interface (TWAI) . . . 1081
2.3.22 Universal Asynchronous Receiver/Transmitter (UART) . . . 1098
2.4 Application Protocols . . . 1125
2.4.1 ASIO port . . . 1125
2.4.2 ESP-MQTT . . . 1126
2.4.3 ESP-TLS . . . 1139
2.4.4 OpenSSL-APIs . . . 1151
2.4.5 ESP HTTP Client . . . 1179
2.4.6 HTTP Server . . . 1194
2.4.7 HTTPS server . . . 1220
2.4.8 ICMP Echo . . . 1223
2.4.9 ESP Local Control . . . 1228
2.4.10 mDNS Service . . . 1237
2.4.11 ESP-Modbus . . . 1252
2.4.12 ESP WebSocket Client . . . 1275
2.4.13 ESP Serial Slave Link . . . 1283

2.4.14 ESP x509 Certificate Bundle . . . 1300
2.4.15 IP Network Layer . . . 1302
2.5 Provisioning API . . . 1303
2.5.1 Protocol Communication . . . 1303
2.5.2 Unified Provisioning . . . 1314
2.5.3 Wi-Fi Provisioning . . . 1319
2.6 Storage API . . . 1336
2.6.1 FAT Filesystem Support . . . 1336
2.6.2 Manufacturing Utility . . . 1342
2.6.3 Non-volatile storage library . . . 1347
2.6.4 NVS Partition Generator Utility . . . 1369
2.6.5 SD/SDIO/MMC Driver . . . 1376
2.6.6 SPI Flash API . . . 1387
2.6.7 SPIFFS Filesystem . . . 1416
2.6.8 Virtual filesystem component . . . 1420
2.6.9 Wear Levelling API . . . 1436
2.7 System API . . . 1440
2.7.1 App Image Format . . . 1440
2.7.2 Application Level Tracing . . . 1446
2.7.3 Console . . . 1451
2.7.4 eFuse Manager . . . 1459
2.7.5 Error Codes and Helper Functions . . . 1476
2.7.6 ESP HTTPS OTA . . . 1479
2.7.7 POSIX Threads Support . . . 1483
2.7.8 Event Loop Library . . . 1487
2.7.9 FreeRTOS . . . 1506
2.7.10 FreeRTOS Additions . . . 1617
2.7.11 Heap Memory Allocation . . . 1637
2.7.12 Heap Memory Debugging . . . 1649
2.7.13 High Resolution Timer . . . 1660
2.7.14 The himem allocation API . . . 1666
2.7.15 Inter-Processor Call . . . 1668
2.7.16 Call function with external stack . . . 1673
2.7.17 Interrupt allocation . . . 1675
2.7.18 Logging library . . . 1681
2.7.19 Miscellaneous System APIs . . . 1688
2.7.20 Over The Air Updates (OTA) . . . 1693
2.7.21 Performance Monitor . . . 1704
2.7.22 Power Management . . . 1708
2.7.23 Random Number Generation . . . 1714
2.7.24 Sleep Modes . . . 1716
2.7.25 Watchdogs . . . 1727
2.7.26 System Time . . . 1731
2.7.27 Internal and Unstable APIs . . . 1735
2.8 API Conventions . . . 1735
2.8.1 Error handling . . . 1736
2.8.2 Configuration structures . . . 1736
2.8.3 Private APIs . . . 1737
2.8.4 Components in example projects . . . 1737
2.8.5 API Stability . . . 1737
2.9 Project Configuration . . . 1738
2.9.1 Introduction . . . 1738
2.9.2 Project Configuration Menu . . . 1738
2.9.3 Using sdkconfig.defaults . . . 1739
2.9.4 Kconfig Formatting Rules . . . 1739
2.9.5 Backward Compatibility of Kconfig Options . . . 1739
2.9.6 Configuration Options Reference . . . 1740
2.9.7 Customisations . . . 1998

2.10 Error Codes Reference . . . 1998

3 ESP32 Hardware Reference 2005
3.1 Chip Series Comparison . . . 2005
3.1.1 Related Documents . . . 2007

4 API Guides 2009
4.1 Application Level Tracing library . . . 2009
4.1.1 Overview . . . 2009
4.1.2 Modes of Operation . . . 2009
4.1.3 Configuration Options and Dependencies . . . 2010
4.1.4 How to use this library . . . 2011
4.2 Application Startup Flow . . . 2020
4.2.1 First stage bootloader . . . 2020
4.2.2 Second stage bootloader . . . 2021
4.2.3 Application startup . . . 2021
4.3 BluFi . . . 2023
4.3.1 Overview . . . 2023
4.3.2 The BluFi Flow . . . 2023
4.3.3 The Flow Chart of BluFi . . . 2024
4.3.4 The Frame Formats Defined in BluFi . . . 2024
4.3.5 The Security Implementation of ESP32 . . . 2029
4.3.6 GATT Related Instructions . . . 2030
4.4 Bootloader . . . 2030
4.4.1 Bootloader compatibility . . . 2031
4.4.2 Log Level . . . 2031
4.4.3 Factory reset . . . 2032
4.4.4 Boot from Test Firmware . . . 2032
4.4.5 Rollback . . . 2033
4.4.6 Watchdog . . . 2033
4.4.7 Bootloader Size . . . 2033
4.4.8 Fast boot from Deep Sleep . . . 2033
4.4.9 Custom bootloader . . . 2034
4.5 Build System . . . 2034
4.5.1 Overview . . . 2034
4.5.2 Using the Build System . . . 2035
4.5.3 Example Project . . . 2038
4.5.4 Project CMakeLists File . . . 2039
4.5.5 Component CMakeLists Files . . . 2041
4.5.6 Component Configuration . . . 2043
4.5.7 Preprocessor Definitions . . . 2043
4.5.8 Component Requirements . . . 2043
4.5.9 Overriding Parts of the Project . . . 2047
4.5.10 Configuration-Only Components . . . 2048
4.5.11 Debugging CMake . . . 2048
4.5.12 Example Component CMakeLists . . . 2048
4.5.13 Custom sdkconfig defaults . . . 2052
4.5.14 Flash arguments . . . 2053
4.5.15 Building the Bootloader . . . 2053
4.5.16 Selecting the Target . . . 2054
4.5.17 Writing Pure CMake Components . . . 2054
4.5.18 Using Third-Party CMake Projects with Components . . . 2054
4.5.19 Using Prebuilt Libraries with Components . . . 2055
4.5.20 Using ESP-IDF in Custom CMake Projects . . . 2056
4.5.21 ESP-IDF CMake Build System API . . . 2056
4.5.22 File Globbing & Incremental Builds . . . 2060
4.5.23 Build System Metadata . . . 2061
4.5.24 Build System Internals . . . 2061

4.5.25 Migrating from ESP-IDF GNU Make System . . . 2063
4.6 Build System (Legacy GNU Make) . . . 2064
4.6.1 Using the Build System . . . 2065
4.6.2 Overview . . . 2065
4.6.3 Building the Bootloader . . . 2075
4.7 Deep Sleep Wake Stubs . . . 2075
4.7.1 Rules for Wake Stubs . . . 2075
4.7.2 Implementing A Stub . . . 2076
4.7.3 Loading Code Into RTC Memory . . . 2076
4.7.4 Loading Data Into RTC Memory . . . 2076
4.7.5 CRC Check For Wake Stubs . . . 2077
4.8 Error Handling . . . 2077
4.8.1 Overview . . . 2077
4.8.2 Error codes . . . 2078
4.8.3 Converting error codes to error messages . . . 2078
4.8.4 ESP_ERROR_CHECK macro . . . 2078
4.8.5 ESP_ERROR_CHECK_WITHOUT_ABORT macro . . . 2079
4.8.6 ESP_RETURN_ON_ERROR macro . . . 2079
4.8.7 ESP_GOTO_ON_ERROR macro . . . 2079
4.8.8 ESP_RETURN_ON_FALSE macro . . . 2079
4.8.9 ESP_GOTO_ON_FALSE macro . . . 2079
4.8.10 CHECK MACROS Examples . . . 2079
4.8.11 Error handling patterns . . . 2080
4.8.12 C++ Exceptions . . . 2081
4.9 ESP-BLE-MESH . . . 2081
4.9.1 Getting Started with ESP-BLE-MESH . . . 2081
4.9.2 ESP-BLE-MESH Examples . . . 2087
4.9.3 ESP-BLE-MESH Demo Videos . . . 2089
4.9.4 ESP-BLE-MESH FAQ . . . 2089
4.9.5 Related Documents . . . 2089
4.10 ESP-WIFI-MESH . . . 2118
4.10.1 Overview . . . 2118
4.10.2 Introduction . . . 2118
4.10.3 ESP-WIFI-MESH Concepts . . . 2119
4.10.4 Building a Network . . . 2125
4.10.5 Managing a Network . . . 2130
4.10.6 Data Transmission . . . 2133
4.10.7 Channel Switching . . . 2135
4.10.8 Performance . . . 2138
4.10.9 Further Notes . . . 2139
4.11 Core Dump . . . 2139
4.11.1 Overview . . . 2139
4.11.2 Configurations . . . 2139
4.11.3 Save core dump to flash . . . 2140
4.11.4 Print core dump to UART . . . 2140
4.11.5 ROM Functions in Backtraces . . . 2141
4.11.6 Dumping variables on demand . . . 2141
4.11.7 Running espcoredump.py . . . 2141
4.12 Event Handling . . . 2142
4.12.1 Wi-Fi, Ethernet, and IP Events . . . 2142
4.12.2 Mesh Events . . . 2144
4.12.3 Bluetooth Events . . . 2144
4.13 Support for external RAM . . . 2144
4.13.1 Introduction . . . 2144
4.13.2 Hardware . . . 2144
4.13.3 Configuring External RAM . . . 2145
4.13.4 Restrictions . . . 2146
4.13.5 Failure to initialize . . . 2147

4.13.6 Chip revisions . . . 2147
4.14 Fatal Errors . . . 2147
4.14.1 Overview . . . 2148
4.14.2 Panic Handler . . . 2148
4.14.3 Register Dump and Backtrace . . . 2150
4.14.4 GDB Stub . . . 2151
4.14.5 Guru Meditation Errors . . . 2151
4.14.6 Other Fatal Errors . . . 2153
4.15 Flash Encryption . . . 2155
4.15.1 Introduction . . . 2155
4.15.2 Relevant eFuses . . . 2156
4.15.3 Flash Encryption Process . . . 2156
4.15.4 Flash Encryption Configuration . . . 2157
4.15.5 Possible Failures . . . 2163
4.15.6 ESP32 Flash Encryption Status . . . 2164
4.15.7 Reading and Writing Data in Encrypted Flash . . . 2165
4.15.8 Updating Encrypted Flash . . . 2166
4.15.9 Disabling Flash Encryption . . . 2166
4.15.10 Key Points About Flash Encryption . . . 2166
4.15.11 Limitations of Flash Encryption . . . 2167
4.15.12 Flash Encryption and Secure Boot . . . 2167
4.15.13 Advanced Features . . . 2167
4.15.14 Technical Details . . . 2169
4.16 ESP-IDF FreeRTOS (SMP) . . . 2170
4.16.1 Overview . . . 2171
4.16.2 Symmetric Multiprocessing . . . 2171
4.16.3 Tasks . . . 2172
4.16.4 SMP Scheduler . . . 2173
4.16.5 Critical Sections . . . 2177
4.16.6 Misc . . . 2178
4.17 Hardware Abstraction . . . 2178
4.17.1 Architecture . . . 2179
4.17.2 LL (Low Level) Layer . . . 2180
4.17.3 HAL (Hardware Abstraction Layer) . . . 2181
4.18 High-Level Interrupts . . . 2182
4.18.1 Interrupt Levels . . . 2182
4.18.2 Notes . . . 2183
4.19 JTAG Debugging . . . 2183
4.19.1 Introduction . . . 2184
4.19.2 How it Works? . . . 2184
4.19.3 Selecting JTAG Adapter . . . 2185
4.19.4 Setup of OpenOCD . . . 2185
4.19.5 Configuring ESP32 Target . . . 2186
4.19.6 Launching Debugger . . . 2191
4.19.7 Debugging Examples . . . 2191
4.19.8 Building OpenOCD from Sources . . . 2191
4.19.9 Tips and Quirks . . . 2196
4.19.10 Related Documents . . . 2201
4.20 Linker Script Generation . . . 2226
4.20.1 Overview . . . 2226
4.20.2 Quick Start . . . 2226
4.20.3 Linker Script Generation Internals . . . 2229
4.21 Memory Types . . . 2236
4.21.1 DRAM (Data RAM) . . . 2236
4.21.2 IRAM (Instruction RAM) . . . 2236
4.21.3 IROM (code executed from Flash) . . . 2237
4.21.4 RTC fast memory . . . 2238
4.21.5 DROM (data stored in Flash) . . . 2238

4.21.6 RTC slow memory . . . 2238
4.21.7 DMA Capable Requirement . . . 2238
4.21.8 DMA Buffer in the stack . . . 2239
4.22 lwIP . . . 2239
4.22.1 Supported APIs . . . 2239
4.22.2 BSD Sockets API . . . 2240
4.22.3 Netconn API . . . 2244
4.22.4 lwIP FreeRTOS Task . . . 2244
4.22.5 IPv6 Support . . . 2244
4.22.6 esp-lwip custom modifications . . . 2245
4.22.7 Performance Optimization . . . 2246
4.23 OpenThread . . . 2247
4.23.1 Mode of the OpenThread stack . . . 2247
4.23.2 How To Write an OpenThread Application . . . 2248
4.23.3 The OpenThread border router . . . 2249
4.24 Partition Tables . . . 2249
4.24.1 Overview . . . 2249
4.24.2 Built-in Partition Tables . . . 2249
4.24.3 Creating Custom Tables . . . 2250
4.24.4 Generating Binary Partition Table . . . 2252
4.24.5 Partition Size Checks . . . 2252
4.24.6 Flashing the partition table . . . 2253
4.24.7 Partition Tool (parttool.py) . . . 2253
4.25 Performance . . . 2254
4.25.1 How to Optimize Performance . . . 2255
4.25.2 Guides . . . 2255
4.26 RF calibration . . . 2272
4.26.1 Partial calibration . . . 2272
4.26.2 Full calibration . . . 2273
4.26.3 No calibration . . . 2273
4.26.4 PHY initialization data . . . 2273
4.27 Secure Boot . . . 2273
4.27.1 Background . . . 2274
4.27.2 Secure Boot Process Overview . . . 2274
4.27.3 Keys . . . 2274
4.27.4 Bootloader Size . . . 2275
4.27.5 How To Enable Secure Boot . . . 2275
4.27.6 Re-Flashable Software Bootloader . . . 2276
4.27.7 Generating Secure Boot Signing Key . . . 2276
4.27.8 Remote Signing of Images . . . 2277
4.27.9 Secure Boot Best Practices . . . 2277
4.27.10 Technical Details . . . 2277
4.27.11 Secure Boot & Flash Encryption . . . 2279
4.27.12 Signed App Verification Without Hardware Secure Boot . . . 2279
4.27.13 Advanced Features . . . 2279
4.28 Secure Boot V2 . . . 2280
4.28.1 Background . . . 2280
4.28.2 Advantages . . . 2280
4.28.3 Secure Boot V2 Process . . . 2280
4.28.4 Signature Block Format . . . 2281
4.28.5 Verifying a Signature Block . . . 2281
4.28.6 Verifying an Image . . . 2282
4.28.7 Bootloader Size . . . 2282
4.28.8 eFuse usage . . . 2282
4.28.9 How To Enable Secure Boot V2 . . . 2282
4.28.10 Restrictions after Secure Boot is enabled . . . 2283
4.28.11 Generating Secure Boot Signing Key . . . 2283
4.28.12 Remote Signing of Images . . . 2283

4.28.13 Secure Boot Best Practices . . . 2284
4.28.14 Technical Details . . . 2284
4.28.15 Secure Boot & Flash Encryption . . . 2284
4.28.16 Signed App Verification Without Hardware Secure Boot . . . 2284
4.28.17 Advanced Features . . . 2285
4.29 Thread Local Storage . . . 2285
4.29.1 Overview . . . 2285
4.29.2 FreeRTOS Native API . . . 2285
4.29.3 Pthread API . . . 2286
4.29.4 C11 Standard . . . 2286
4.30 Tools . . . 2286
4.30.1 Downloadable Tools . . . 2286
4.30.2 IDF Docker Image . . . 2296
4.30.3 IDF Windows Installer . . . 2298
4.30.4 IDF Component Manager . . . 2299
4.30.5 IDF Clang Tidy . . . 2300
4.31 ULP Coprocessor programming . . . 2301
4.31.1 Installing the Toolchain . . . 2301
4.31.2 Programming ULP FSM . . . 2301
4.31.3 Compiling the ULP Code . . . 2328
4.31.4 Accessing the ULP FSM Program Variables . . . 2329
4.31.5 Starting the ULP FSM Program . . . 2330
4.31.6 ESP32 ULP program flow . . . 2331
4.31.7 Application Examples . . . 2331
4.31.8 API Reference . . . 2331
4.32 The ULP Coprocessor (Legacy GNU Make) . . . 2333
4.32.1 Installing the Toolchain . . . 2333
4.32.2 Compiling the ULP Code . . . 2334
4.32.3 Accessing the ULP Program Variables . . . 2334
4.32.4 Starting the ULP Program . . . 2335
4.32.5 ULP Program Flow . . . 2336
4.33 Unit Testing in ESP32 . . . 2337
4.33.1 Normal Test Cases . . . 2338
4.33.2 Multi-device Test Cases . . . 2338
4.33.3 Multi-stage Test Cases . . . 2339
4.33.4 Tests For Different Targets . . . 2340
4.33.5 Building Unit Test App . . . 2340
4.33.6 Running Unit Tests . . . 2341
4.33.7 Timing Code with Cache Compensated Timer . . . 2342
4.33.8 Mocks . . . 2343
4.34 Unit Testing on Linux . . . 2345
4.34.1 Embedded Software Tests . . . 2345
4.34.2 IDF Unit Tests on Linux Host . . . 2345
4.35 Unit Testing (Legacy GNU Make) . . . 2346
4.35.1 Normal Test Cases . . . 2346
4.35.2 Multi-device Test Cases . . . 2347
4.35.3 Multi-stage Test Cases . . . 2348
4.35.4 Building Unit Test App . . . 2348
4.35.5 Running Unit Tests . . . 2348
4.36 Wi-Fi Driver . . . 2350
4.36.1 ESP32 Wi-Fi Feature List . . . 2350
4.36.2 How To Write a Wi-Fi Application . . . 2350
4.36.3 ESP32 Wi-Fi API Error Code . . . 2351
4.36.4 ESP32 Wi-Fi API Parameter Initialization . . . 2351
4.36.5 ESP32 Wi-Fi Programming Model . . . 2351
4.36.6 ESP32 Wi-Fi Event Description . . . 2352
4.36.7 ESP32 Wi-Fi Station General Scenario . . . 2355
4.36.8 ESP32 Wi-Fi AP General Scenario . . . 2357

4.36.9 ESP32 Wi-Fi Scan . . . 2359
4.36.10 ESP32 Wi-Fi Station Connecting Scenario . . . 2365
4.36.11 ESP32 Wi-Fi Station Connecting When Multiple APs Are Found . . . 2369
4.36.12 Wi-Fi Reconnect . . . 2369
4.36.13 Wi-Fi Beacon Timeout . . . 2369
4.36.14 ESP32 Wi-Fi Configuration . . . 2369
4.36.15 Wi-Fi Easy Connect™ (DPP) . . . 2374
4.36.16 Wireless Network Management . . . 2375
4.36.17 Radio Resource Measurement . . . 2375
4.36.18 ESP32 Wi-Fi Power-saving Mode . . . 2375
4.36.19 ESP32 Wi-Fi Throughput . . . 2376
4.36.20 Wi-Fi 80211 Packet Send . . . 2376
4.36.21 Wi-Fi Sniffer Mode . . . 2378
4.36.22 Wi-Fi Multiple Antennas . . . 2379
4.36.23 Wi-Fi Channel State Information . . . 2380
4.36.24 Wi-Fi Channel State Information Configure . . . 2382
4.36.25 Wi-Fi HT20/40 . . . 2382
4.36.26 Wi-Fi QoS . . . 2382
4.36.27 Wi-Fi AMSDU . . . 2383
4.36.28 Wi-Fi Fragment . . . 2383
4.36.29 WPS Enrollee . . . 2383
4.36.30 Wi-Fi Buffer Usage . . . 2383
4.36.31 How to improve Wi-Fi performance . . . 2384
4.36.32 Wi-Fi Menuconfig . . . 2387
4.36.33 Troubleshooting . . . 2389
4.37 Wi-Fi Security . . . 2394
4.37.1 ESP32 Wi-Fi Security Features . . . 2394
4.37.2 Protected Management Frames (PMF) . . . 2394
4.37.3 WPA3-Personal . . . 2395

5 Libraries and Frameworks **2397**
5.1 Cloud Frameworks . . . 2397
5.1.1 ESP RainMaker . . . 2397
5.1.2 AWS IoT . . . 2397
5.1.3 Azure IoT . . . 2397
5.1.4 Google IoT Core . . . 2397
5.1.5 Aliyun IoT . . . 2397
5.1.6 Joylink IoT . . . 2397
5.1.7 Tencent IoT . . . 2398
5.1.8 Tencentyun IoT . . . 2398
5.1.9 Baidu IoT . . . 2398
5.2 Espressif ' s Frameworks . . . 2398
5.2.1 Espressif Audio Development Framework . . . 2398
5.2.2 ESP-CSI . . . 2398
5.2.3 Espressif DSP Library . . . 2398
5.2.4 ESP-WIFI-MESH Development Framework . . . 2399
5.2.5 ESP-WHO . . . 2399
5.2.6 ESP RainMaker . . . 2399
5.2.7 ESP-IoT-Solution . . . 2399

6 Contributions Guide **2401**
6.1 How to Contribute . . . 2401
6.2 Before Contributing . . . 2401
6.3 Pull Request Process . . . 2401
6.4 Legal Part . . . 2402
6.5 Related Documents . . . 2402
6.5.1 Espressif IoT Development Framework Style Guide . . . 2402
6.5.2 Install pre-commit Hook for ESP-IDF Project . . . 2409

6.5.3 Documenting Code . . . 2410
6.5.4 Creating Examples . . . 2416
6.5.5 API Documentation Template . . . 2416
6.5.6 Contributor Agreement . . . 2418

7 ESP-IDF Versions 2421
7.1 Releases . . . 2421
7.2 Which Version Should I Start With? . . . 2421
7.3 Versioning Scheme . . . 2421
7.4 Support Periods . . . 2422
7.5 Checking the Current Version . . . 2423
7.6 Git Workflow . . . 2424
7.7 Updating ESP-IDF . . . 2424
7.7.1 Updating to Stable Release . . . 2425
7.7.2 Updating to a Pre-Release Version . . . 2425
7.7.3 Updating to Master Branch . . . 2425
7.7.4 Updating to a Release Branch . . . 2426

8 Resources 2427
8.1 PlatformIO . . . 2427
8.1.1 What is PlatformIO? . . . 2427
8.1.2 Installation . . . 2427
8.1.3 Configuration . . . 2428
8.1.4 Tutorials . . . 2428
8.1.5 Project Examples . . . 2428
8.1.6 Next Steps . . . 2428
8.2 Useful Links . . . 2428

9 Copyrights and Licenses 2429
9.1 Software Copyrights . . . 2429
9.1.1 Firmware Components . . . 2429
9.1.2 Build Tools . . . 2430
9.1.3 Documentation . . . 2430
9.2 ROM Source Code Copyrights . . . 2430
9.3 Xtensa libhal MIT License . . . 2431
9.4 TinyBasic Plus MIT License . . . 2431
9.5 TJpgDec License . . . 2431

10 About 2433

11 Switch Between Languages 2435

Index 2437

Index 2437

This is the documentation for Espressif IoT Development Framework (esp-idf). ESP-IDF is the official development framework for the ESP32, ESP32-S and ESP32-C Series SoCs.

This document describes using ESP-IDF with the ESP32 SoC.

	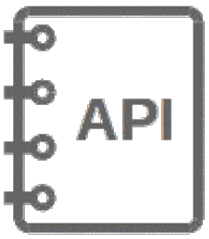	
Get Started	API Reference	H/W Reference
	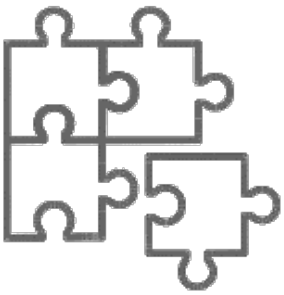	
API Guides	Contribute	Resources

Chapter 1

Get Started

This document is intended to help you set up the software development environment for the hardware based on the ESP32 chip by Espressif. After that, a simple example will show you how to use ESP-IDF (Espressif IoT Development Framework) for menu configuration, then for building and flashing firmware onto an ESP32 board.

Note: This is documentation for stable version v4.4.3 of ESP-IDF. Other *ESP-IDF Versions* are also available.

1.1 Introduction

ESP32 is a system on a chip that integrates the following features:

- Wi-Fi (2.4 GHz band)
- Bluetooth
- Dual high performance Xtensa® 32-bit LX6 CPU cores
- Ultra Low Power co-processor
- Multiple peripherals

Powered by 40 nm technology, ESP32 provides a robust, highly integrated platform, which helps meet the continuous demands for efficient power usage, compact design, security, high performance, and reliability.

Espressif provides basic hardware and software resources to help application developers realize their ideas using the ESP32 series hardware. The software development framework by Espressif is intended for development of Internet-of-Things (IoT) applications with Wi-Fi, Bluetooth, power management and several other system features.

1.2 What You Need

Hardware:

- An **ESP32** board
- **USB cable** - USB A / micro USB B
- **Computer** running Windows, Linux, or macOS

Software:

You have a choice to either download and install the following software manually

- **Toolchain** to compile code for ESP32
- **Build tools** - CMake and Ninja to build a full **Application** for ESP32
- **ESP-IDF** that essentially contains API (software libraries and source code) for ESP32 and scripts to operate the **Toolchain**

or get through the onboarding process using the following official plugins for integrated development environments (IDE) described in separate documents

- Eclipse Plugin (installation link)
- VS Code Extension (setup)

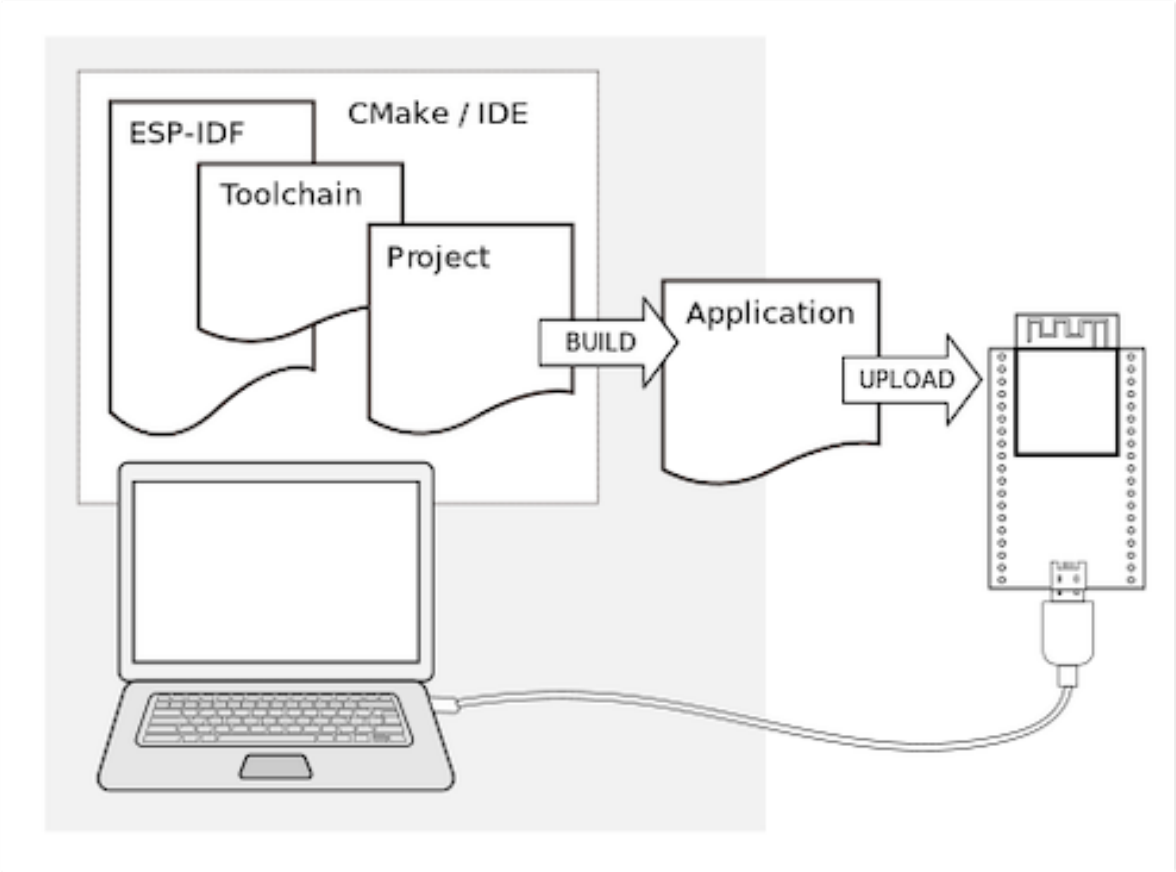

Fig. 1: Development of applications for ESP32

1.3 Development Board Overviews

If you have one of ESP32 development boards listed below, you can click on the link to learn more about its hardware.

1.3.1 ESP32-DevKitC V4 Getting Started Guide

This guide shows how to start using the ESP32-DevKitC V4 development board.

What You Need

- *ESP32-DevKitC V4 board*
- USB A / micro USB B cable
- Computer running Windows, Linux, or macOS

You can skip the introduction sections and go directly to Section *Start Application Development*.

Overview

ESP32-DevKitC V4 is a small-sized ESP32-based development board produced by Espressif. Most of the I/O pins are broken out to the pin headers on both sides for easy interfacing. Developers can either connect peripherals with jumper wires or mount ESP32-DevKitC V4 on a breadboard.

To cover a wide range of user requirements, the following versions of ESP32-DevKitC V4 are available:

- different ESP32 modules
  - ESP32-WROOM-DA
  - ESP32-WROOM-32E
  - ESP32-WROOM-32UE
  - ESP32-WROOM-32D
  - ESP32-WROOM-32U
  - ESP32-SOLO-1
  - ESP32-WROVER-E
  - ESP32-WROVER-IE
- male or female pin headers.

For details please refer to ESP Product Selector.

Functional Description

The following figure and the table below describe the key components, interfaces and controls of the ESP32-DevKitC V4 board.

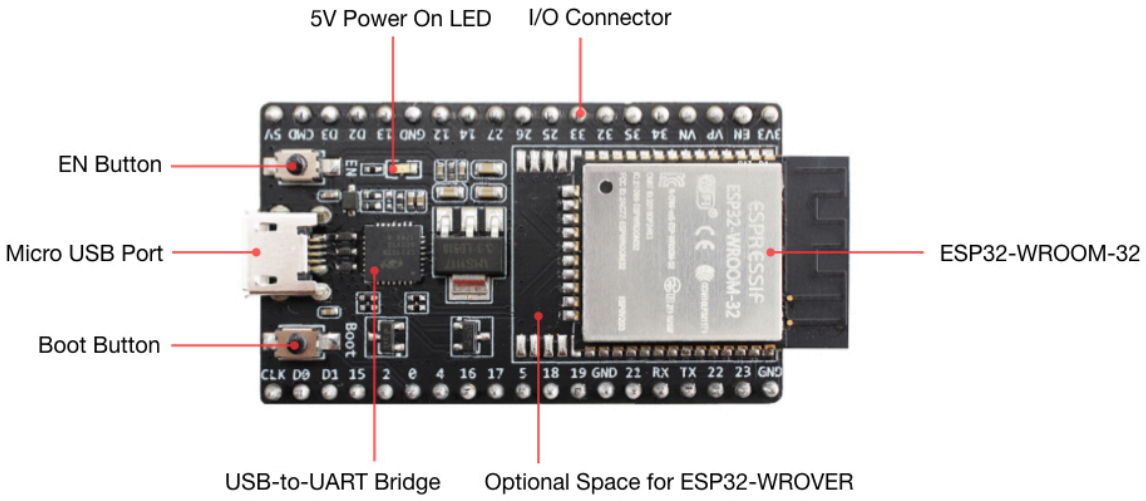

Fig. 2: ESP32-DevKitC V4 with ESP32-WROOM-32 module soldered

Key Component	Description
ESP32-WROOM-32	A module with ESP32 at its core. For more information, see ESP32-WROOM-32 Datasheet.
EN	Reset button.
Boot	Download button. Holding down **Boot** and then pressing **EN** initiates Firmware Download mode for downloading firmware through the serial port.
USB-to-UART Bridge	Single USB-UART bridge chip provides transfer rates of up to 3 Mbps.
Micro USB Port	USB interface. Power supply for the board as well as the communication interface between a computer and the ESP32-WROOM-32 module.
5V Power On LED	Turns on when the USB or an external 5V power supply is connected to the board. For details see the schematics in *Related Documents*.
I/O	Most of the pins on the ESP module are broken out to the pin headers on the board. You can program ESP32 to enable multiple functions such as PWM, ADC, DAC, I2C, I2S, SPI, etc.

Note: The pins D0, D1, D2, D3, CMD and CLK are used internally for communication between ESP32 and SPI flash memory. They are grouped on both sides near the USB connector. Avoid using these pins, as it may disrupt access to the SPI flash memory / SPI RAM.

Note: The pins GPIO16 and GPIO17 are available for use only on the boards with the modules ESP32-WROOM and ESP32-SOLO-1. The boards with ESP32-WROVER modules have the pins reserved for internal use.

Power Supply Options

There are three mutually exclusive ways to provide power to the board:

- Micro USB port, default power supply
- 5V / GND header pins
- 3V3 / GND header pins

Warning: The power supply must be provided using **one and only one of the options above**, otherwise the board and/or the power supply source can be damaged.

Header Block

The two tables below provide the **Name** and **Function** of I/O header pins on both sides of the board, as shown in *ESP32-DevKitC V4 with ESP32-WROOM-32 module soldered*. The numbering and names are the same as in the ESP32-DevKitC V4 schematics (PDF).

J1

No.	Name	Type	Function
1	3V3	P	3.3 V power supply
2	EN	I	CHIP_PU, Reset
3	IO36	I	GPIO36, ADC1_CH0, S_VP
4	IO39	I	GPIO39, ADC1_CH3, S_VN
5	IO34	I	GPIO34, ADC1_CH6, VDET_1
6	IO35	I	GPIO35, ADC1_CH7, VDET_2
7	IO32	I/O	GPIO32, ADC1_CH4, TOUCH_CH9, XTAL_32K_P
8	IO33	I/O	GPIO33, ADC1_CH5, TOUCH_CH8, XTAL_32K_N
9	IO25	I/O	GPIO25, ADC1_CH8, DAC_1
10	IO26	I/O	GPIO26, ADC2_CH9, DAC_2
11	IO27	I/O	GPIO27, ADC2_CH7, TOUCH_CH7
12	IO14	I/O	GPIO14, ADC2_CH6, TOUCH_CH6, MTMS
13	IO12	I/O	GPIO12, ADC2_CH5, TOUCH_CH5, MTDI
14	GND	G	Ground
15	IO13	I/O	GPIO13, ADC2_CH4, TOUCH_CH4, MTCK
16	IO9	I/O	GPIO9, D2
17	IO10	I/O	GPIO10, D3
18	IO11	I/O	GPIO11, CMD
19	5V0	P	5 V power supply

J3

No.	Name	Type	Function
1	GND	G	Ground
2	IO23	I/O	GPIO23
3	IO22	I/O	GPIO22
4	IO1	I/O	GPIO1, U0TXD
5	IO3	I/O	GPIO3, U0RXD
6	IO21	I/O	GPIO21
7	GND	G	Ground
8	IO19	I/O	GPIO19
9	IO18	I/O	GPIO18
10	IO5	I/O	GPIO5
11	IO17	I/O	GPIO17
12	IO16	I/O	GPIO16
13	IO4	I/O	GPIO4, ADC2_CH0, TOUCH_CH0
14	IO0	I/O	GPIO0, ADC2_CH1, TOUCH_CH1, Boot
16	IO2	I/O	GPIO2, ADC2_CH2, TOUCH_CH2
17	IO15	I/O	GPIO15, ADC2_CH3, TOUCH_CH3, MTDO
17	IO8	I/O	GPIO8, D1
18	IO7	I/O	GPIO7, D0
19	IO6	I/O	GPIO6, SCK

P: Power supply; I: Input; O: Output.

Pin Layout

Note on C15

The component C15 may cause the following issues on earlier ESP32-DevKitC V4 boards:

- The board may boot into Download mode
- If you output clock on GPIO0, C15 may impact the signal

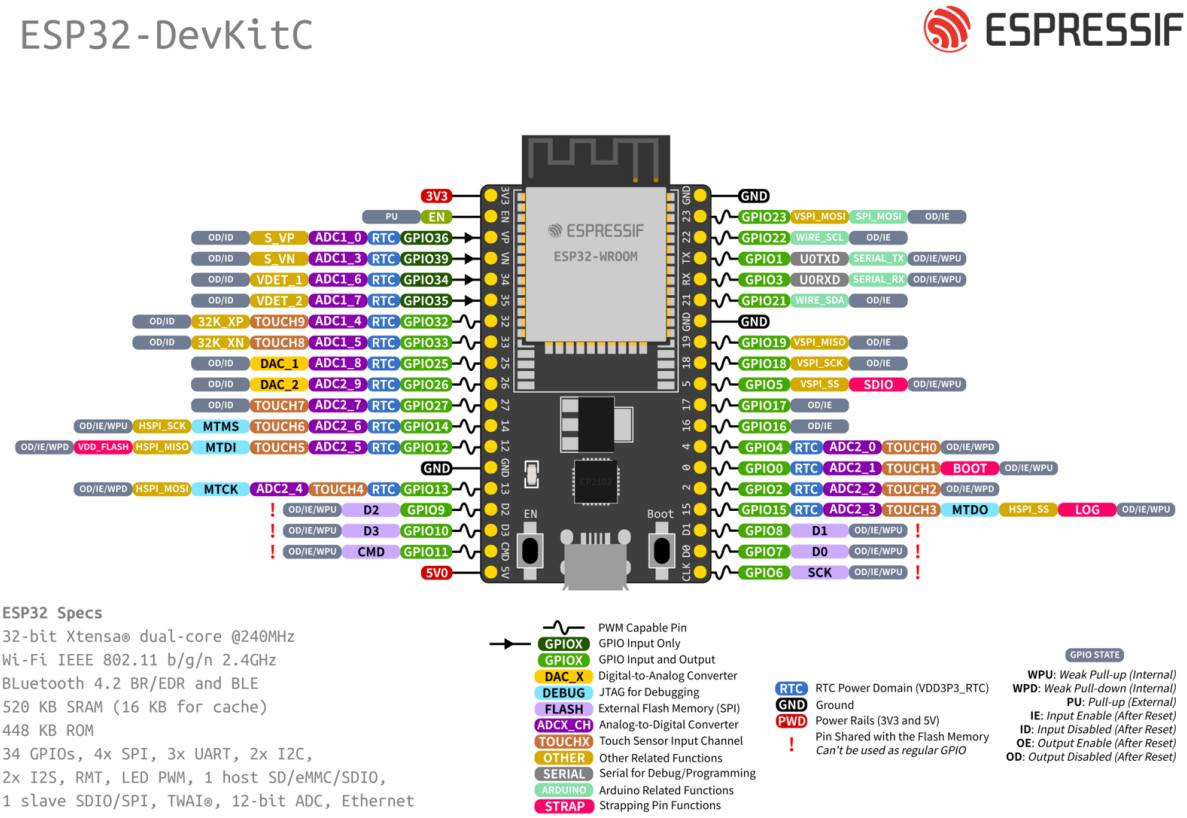

Fig. 3: ESP32-DevKitC Pin Layout (click to enlarge)

In case these issues occur, please remove the component. The figure below shows the location of C15 highlighted in yellow.

Start Application Development

Before powering up your ESP32-DevKitC V4, please make sure that the board is in good condition with no obvious signs of damage.

After that, proceed to *Get Started*, where Section *Installation Step by Step* will quickly help you set up the development environment and then flash an example project onto your board.

Board Dimensions

Related Documents

- ESP32-DevKitC V4 schematics (PDF)
- ESP32 Datasheet (PDF)
- ESP32-WROOM-32 Datasheet (PDF)
- ESP32-WROOM-32D and ESP32-WROOM-32U Datasheet (PDF)
- ESP32-WROOM-DA Datasheet (PDF)
- ESP32-WROVER Datasheet (PDF)
- ESP32-WROVER-B Datasheet (PDF)
- ESP Product Selector

For further design documentation for the board, please contact us at sales@espressif.com.

ESP32-DevKitC V2 Getting Started Guide

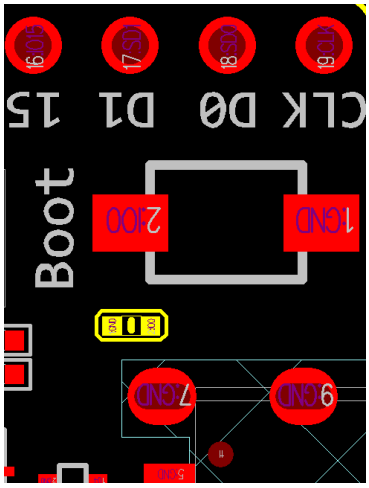

Fig. 4: Location of C15 (yellow) on ESP32-DevKitC V4 board

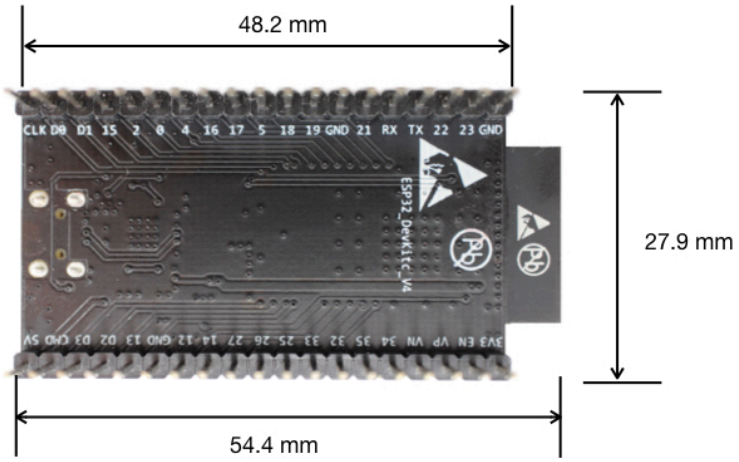

Fig. 5: Dimensions of ESP32-DevKitC board with ESP32-WROOM-32 module soldered - back (click to enlarge)

This guide shows how to start using the ESP32-DevKitC V2 development board.

What You Need

- ESP32-DevKitC V2 board
- USB A / micro USB B cable
- Computer running Windows, Linux, or macOS

You can skip the introduction sections and go directly to Section *Start Application Development*.

Overview ESP32-DevKitC V2 is a small-sized ESP32-based development board produced by Espressif. Most of the I/O pins are broken out to the pin headers on both sides for easy interfacing. Developers can either connect peripherals with jumper wires or mount ESP32-DevKitC V4 on a breadboard.

Functional Description The following figure and the table below describe the key components, interfaces and controls of the ESP32-DevKitC V2 board.

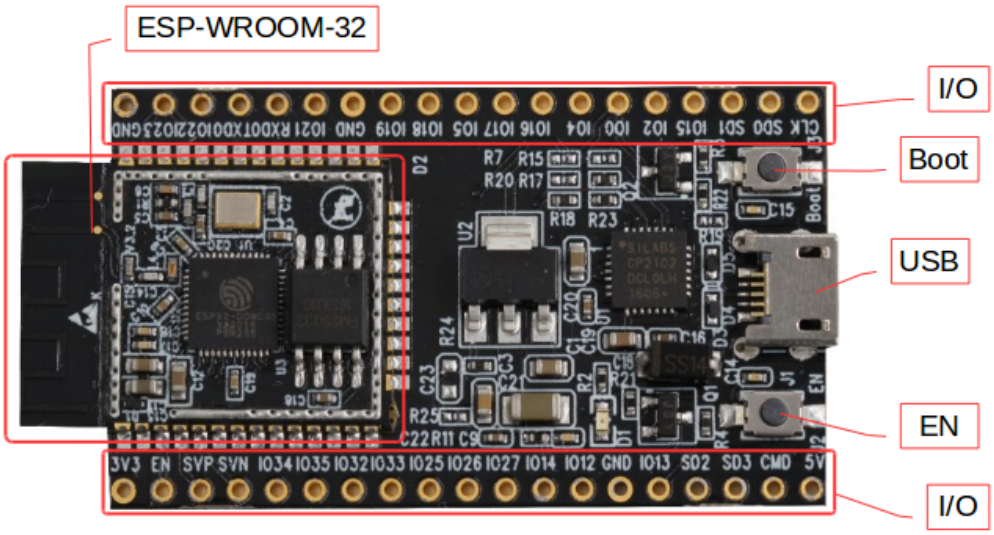

Fig. 6: ESP32-DevKitC V2 board layout

Key Component	Description
ESP32-WROOM-32	Standard module with ESP32 at its core. For more information, see ESP32-WROOM-32 Datasheet
EN	Reset button.
Boot	Download button. Holding down **Boot** and then pressing **EN** initiates Firmware Download mode for downloading firmware through the serial port.
Micro USB Port	USB interface. Power supply for the board as well as the communication interface between a computer and ESP32-WROOM-32.
I/O	Most of the pins on the ESP module are broken out to the pin headers on the board. You can program ESP32 to enable multiple functions such as PWM, ADC, DAC, I2C, I2S, SPI, etc.

Power Supply Options There are three mutually exclusive ways to provide power to the board:

- Micro USB port, default power supply
- 5V / GND header pins
- 3V3 / GND header pins

> **Warning:** The power supply must be provided using **one and only one of the options above**, otherwise the board and/or the power supply source can be damaged.

Start Application Development Before powering up your ESP32-DevKitC V2, please make sure that the board is in good condition with no obvious signs of damage.

After that, proceed to *Get Started*, where Section *Installation Step by Step* will quickly help you set up the development environment and then flash an example project onto your board.

Related Documents

- ESP32-DevKitC schematics (PDF)
- ESP32 Datasheet (PDF)
- ESP32-WROOM-32 Datasheet (PDF)

1.3.2 ESP-WROVER-KIT V4.1 Getting Started Guide

This guide shows how to get started with the ESP-WROVER-KIT V4.1 development board and also provides information about its functionality and configuration options.

What You Need

- *ESP-WROVER-KIT V4.1 board*
- USB 2.0 cable（A to Micro-B）
- Computer running Windows, Linux, or macOS

You can skip the introduction sections and go directly to Section *Start Application Development*.

Overview

ESP-WROVER-KIT is an ESP32-based development board produced by Espressif.

ESP-WROVER-KIT features the following integrated components:

- ESP32-WROVER-E module
- LCD screen
- MicroSD card slot

Its another distinguishing feature is the embedded FTDI FT2232HL chip - an advanced multi-interface USB bridge. This chip enables to use JTAG for direct debugging of ESP32 through the USB interface without a separate JTAG debugger. ESP-WROVER-KIT makes development convenient, easy, and cost-effective.

Most of the ESP32 I/O pins are broken out to the board's pin headers for easy access.

Note: ESP32's GPIO16 and GPIO17 are used as chip select and clock signals for PSRAM. By default, the two GPIOs are not broken out to the board's pin headers in order to ensure reliable performance.

Functionality Overview

The block diagram below shows the main components of ESP-WROVER-KIT and their interconnections.

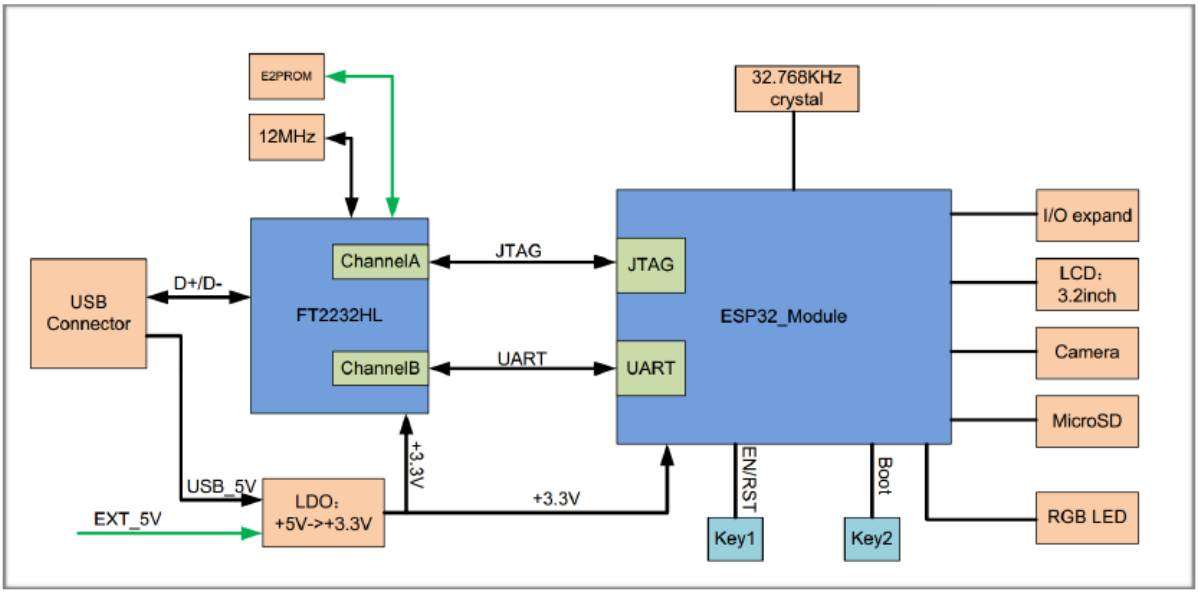

Fig. 7: ESP-WROVER-KIT block diagram

Functional Description

The following two figures and the table below describe the key components, interfaces, and controls of the ESP-WROVER-KIT board.

The table below provides description in the following manner:

- Starting from the first picture’ s top right corner and going clockwise
- Then moving on to the second picture

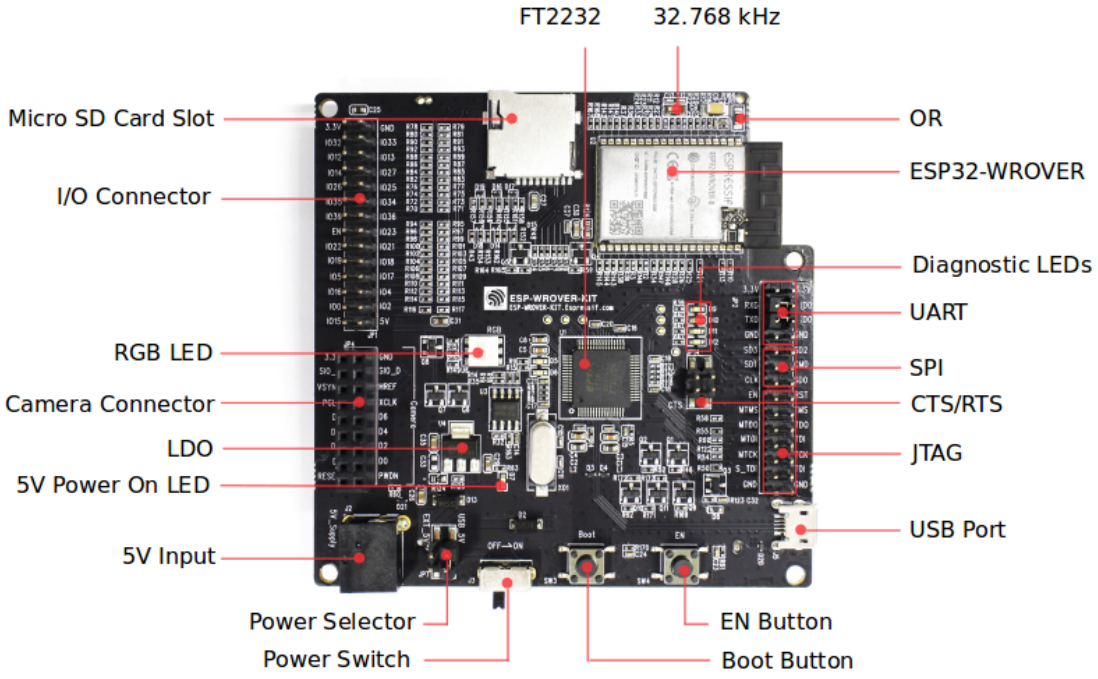

Fig. 8: ESP-WROVER-KIT board layout - front

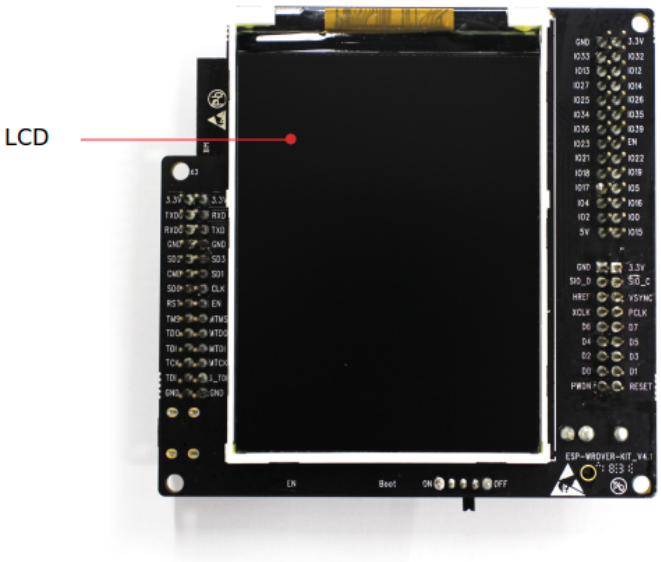

Fig. 9: ESP-WROVER-KIT board layout - back

Key Component	Description
FT2232	The FT2232 chip serves as a multi-protocol USB-to-serial bridge which can be programmed and controlled via USB to provide communication with ESP32. FT2232 also features USB-to-JTAG interface which is available on channel A of the chip, while USB-to-serial is on channel B. The FT2232 chip enhances user-friendliness in terms of application development and debugging. See ESP-WROVER-KIT V4.1 schematic.
32.768 kHz	External precision 32.768 kHz crystal oscillator serves as a clock with low-power consumption while the chip is in Deep-sleep mode.
0R	Zero-ohm resistor intended as a placeholder for a current shunt, can be desoldered or replaced with a current shunt to facilitate the measurement of ESP32' s current consumption in different modes.
ESP32-WROVER-E module	This ESP32 module features 64-Mbit PSRAM for flexible extended storage and data processing capabilities.
Diagnostic LEDs	Four red LEDs connected to the GPIO pins of FT2232. Intended for future use.
UART	Serial port. The serial TX/RX signals of FT2232 and ESP32 are broken out to the inward and outward sides of JP2 respectively. By default, these pairs of pins are connected with jumpers. To use ESP32' s serial interface, remove the jumpers and connect another external serial device to the respective pins.
SPI	By default, ESP32 uses its SPI interface to access flash and PSRAM memory inside the module. Use these pins to connect ESP32 to another SPI device. In this case, an extra chip select (CS) signal is needed. Please note that the voltage of this interface is 3.3 V.
CTS/RTS	Serial port flow control signals: the pins are not connected to the circuitry by default. To enable them, short the respective pins of JP14 with jumpers.
JTAG	JTAG interface. JTAG signals of FT2232 and ESP32 are broken out to the inward and outward sides of JP2 respectively. By default, these pairs of pins are disconnected. To enable JTAG, short the respective pins with jumpers as shown in Section *Setup Options*.
USB Port	USB interface. Power supply for the board as well as the communication interface between a computer and the board.
EN Button	Reset button.
BOOT Button	Download button. Holding down **Boot** and then pressing **EN** initiates Firmware Download mode for downloading firmware through the serial port.
Power Switch	Power On/Off Switch. Toggling toward the **Boot** button powers the board on, toggling away from **Boot** powers the board off.
Power Selector	Power supply selector interface. The board can be powered either via USB or via the 5V Input interface. Select the power source with a jumper. For more details, see Section *Setup Options*, jumper header JP7.
5V Input	5V power supply interface for a standard coaxial power connector, 5.5 x 2.1 mm, center positive. This interface can be more convenient when the board is operating autonomously (not connected to a computer).
5V Power On LED	This red LED turns on when power is supplied to the board, either from **USB** or **5V Input**.
LDO	NCP1117(1A). 5V-to-3.3V LDO. NCP1117 can provide a maximum current of 1A. The LDO on the board has a fixed output voltage. Although, the user can install an LDO with adjustable output voltage. For details, please refer to ESP-WROVER-KIT V4.1 schematic.
Camera Connector	Camera interface, a standard OV7670 camera module.
RGB LED	Red, green and blue (RGB) light emitting diodes (LEDs), can be controlled by pulse width modulation (PWM).
I/O Connector	All the pins on the ESP32 module are broken out to pin headers. You can program ESP32 to enable multiple functions, such as PWM, ADC, DAC, I2C, I2S, SPI, etc.
MicroSD Card Slot	Useful for developing applications that access MicroSD card for data storage and retrieval.
LCD	Support for mounting and interfacing a 3.2" SPI (standard 4-wire Serial Peripheral Interface) LCD, as shown on figure *ESP-WROVER-KIT board layout - back*.

Setup Options

There are three jumper blocks available to set up the board functionality. The most frequently required options are listed in the table below.

Header	Jumper Setting	Description of Functionality
JP7		Power ESP-WROVER-KIT via an external power supply
JP7	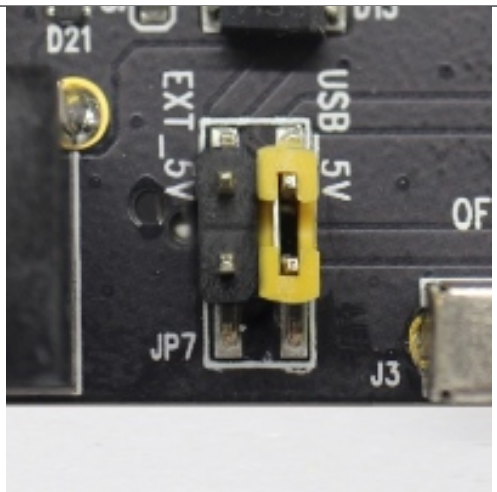	Power ESP-WROVER-KIT via USB
JP2	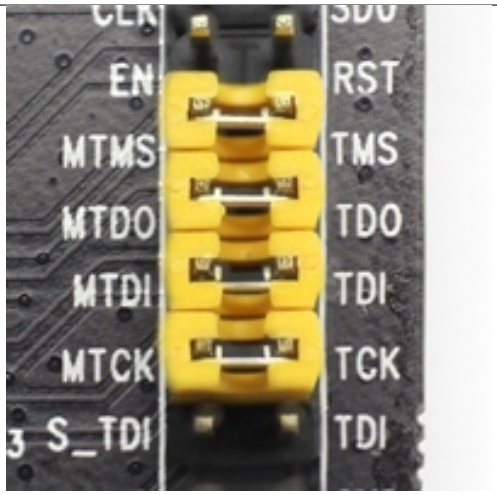	Enable JTAG functionality
JP2	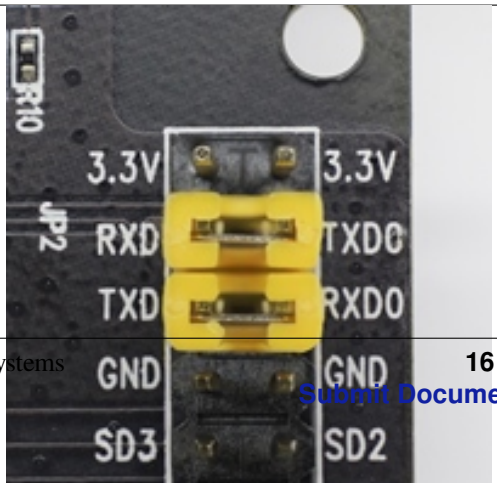	Enable UART communication

Allocation of ESP32 Pins

Some pins / terminals of ESP32 are allocated for use with the onboard or external hardware. If that hardware is not used, e.g., nothing is plugged into the Camera (JP4) header, then these GPIOs can be used for other purposes.

Some of the pins, such as GPIO0 or GPIO2, have multiple functions and some of them are shared among onboard and external peripheral devices. Certain combinations of peripherals cannot work together. For example, it is not possible to do JTAG debugging of an application that is using SD card, because several pins are shared by JTAG and the SD card slot.

In other cases, peripherals can coexist under certain conditions. This is applicable to, for example, LCD screen and SD card that share only a single pin GPIO21. This pin is used to provide D/C (Data / Control) signal for the LCD as well as the Card Detect signal read from the SD card slot. If the card detect functionality is not essential, then it may be disabled by removing R167, so both LCD and SD may operate together.

For more details on which pins are shared among which peripherals, please refer to the table in the next section.

Main I/O Connector / JP1 The JP1 connector consists of 14x2 male pins whose functions are shown in the middle two "I/O" columns of the table below. The two "Shared With" columns on both sides describe where else on the board a certain GPIO is used.

Shared With	I/O	I/O	Shared With
n/a	3.3V	GND	n/a
NC/XTAL	IO32	IO33	NC/XTAL
JTAG, MicroSD	IO12	IO13	JTAG, MicroSD
JTAG, MicroSD	IO14	IO27	Camera
Camera	IO26	IO25	Camera, LCD
Camera	IO35	IO34	Camera
Camera	IO39	IO36	Camera
JTAG	EN	IO23	Camera, LCD
Camera, LCD	IO22	IO21	Camera, LCD, MicroSD
Camera, LCD	IO19	IO18	Camera, LCD
Camera, LCD	IO5	IO17	PSRAM
PSRAM	IO16	IO4	LED, Camera, MicroSD
Camera, LED, Boot	IO0	IO2	LED, MicroSD
JTAG, MicroSD	IO15	5V	

Legend:

- NC/XTAL - *32.768 kHz Oscillator*
- JTAG - *JTAG / JP2*
- Boot - Boot button / SW2
- Camera - *Camera / JP4*
- LED - *RGB LED*
- MicroSD - *MicroSD Card / J4*
- LCD - *LCD / U5*
- PSRAM - ESP32-WROVER-E's PSRAM

32.768 kHz Oscillator

.	ESP32 Pin
1	GPIO32
2	GPIO33

Note: Since GPIO32 and GPIO33 are connected to the oscillator by default, they are not connected to the JP1 I/O connector to maintain signal integrity. This allocation may be changed from the oscillator to JP1 by desoldering the zero-ohm resistors from positions R11 / R23 and re-soldering them to positions R12 / R24.

SPI Flash / JP2

.	ESP32 Pin
1	CLK / GPIO6
2	SD0 / GPIO7
3	SD1 / GPIO8
4	SD2 / GPIO9
5	SD3 / GPIO10
6	CMD / GPIO11

Important: The module's flash bus is connected to the jumper block JP2 through zero-ohm resistors R140 ~ R145. If the flash memory needs to operate at the frequency of 80 MHz, for reasons such as improving the integrity of bus signals, you can desolder these resistors to disconnect the module's flash bus from the pin header JP2.

JTAG / JP2

.	ESP32 Pin	JTAG Signal
1	EN	TRST_N
2	MTMS / GPIO14	TMS
3	MTDO / GPIO15	TDO
4	MTDI / GPIO12	TDI
5	MTCK / GPIO13	TCK

Camera / JP4

.	ESP32 Pin	Camera Signal
1	n/a	3.3V
2	n/a	Ground
3	GPIO27	SIO_C / SCCB Clock
4	GPIO26	SIO_D / SCCB Data
5	GPIO25	VSYNC / Vertical Sync
6	GPIO23	HREF / Horizontal Reference
7	GPIO22	PCLK / Pixel Clock
8	GPIO21	XCLK / System Clock
9	GPIO35	D7 / Pixel Data Bit 7
10	GPIO34	D6 / Pixel Data Bit 6
11	GPIO39	D5 / Pixel Data Bit 5
12	GPIO36	D4 / Pixel Data Bit 4
13	GPIO19	D3 / Pixel Data Bit 3
14	GPIO18	D2 / Pixel Data Bit 2
15	GPIO5	D1 / Pixel Data Bit 1
16	GPIO4	D0 / Pixel Data Bit 0
17	GPIO0	RESET / Camera Reset
18	n/a	PWDN / Camera Power Down

- Signals D0 .. D7 denote camera data bus

RGB LED

.	ESP32 Pin	RGB LED
1	GPIO0	Red
2	GPIO2	Green
3	GPIO4	Blue

MicroSD Card

.	ESP32 Pin	MicroSD Signal
1	MTDI / GPIO12	DATA2
2	MTCK / GPIO13	CD / DATA3
3	MTDO / GPIO15	CMD
4	MTMS / GPIO14	CLK
5	GPIO2	DATA0
6	GPIO4	DATA1
7	GPIO21	Card Detect

LCD / U5

.	ESP32 Pin	LCD Signal
1	GPIO18	RESET
2	GPIO19	SCL
3	GPIO21	D/C
4	GPIO22	CS
5	GPIO23	SDA
6	GPIO25	SDO
7	GPIO5	Backlight

Start Application Development

Before powering up your ESP-WROVER-KIT, please make sure that the board is in good condition with no obvious signs of damage.

Initial Setup Please set only the following jumpers shown in the pictures below:

- Select USB as the power source using the jumper block JP7.
- Enable UART communication using the jumper block JP2.

Power up from USB port	Enable UART communication
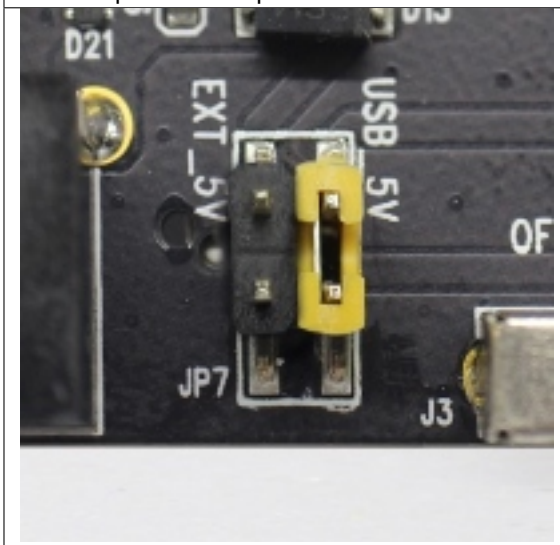	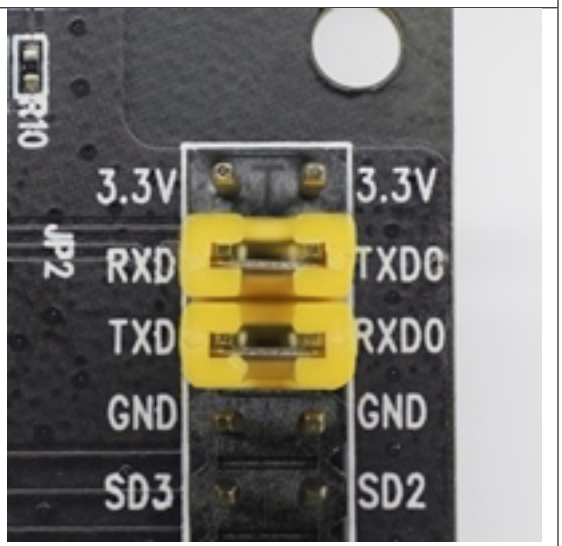

Do not install any other jumpers.

Turn the **Power Switch** to ON, the **5V Power On LED** should light up.

Now to Development Please proceed to *Get Started*, where Section *Installation Step by Step* will quickly help you set up the development environment and then flash an example project onto your board.

The application examples that use some hardware specific to your ESP-WROVER-KIT can be found below.

- On-board LCD example: peripherals/spi_master/lcd
- SD card slot example: storage/sd_card
- Camera connector example: https://github.com/espressif/esp32-camera

Related Documents

- ESP-WROVER-KIT V4.1 schematic (PDF)
- ESP-WROVER-KIT V4.1 layout (DXF) may be opened online with Autodesk Viewer
- ESP32 Datasheet (PDF)
- ESP32-WROVER-E Datasheet (PDF)
- *JTAG Debugging*
- *ESP32 Hardware Reference*

ESP-WROVER-KIT V3 Getting Started Guide

This guide shows how to get started with the ESP-WROVER-KIT V3 development board and also provides information about its functionality and configuration options. For the description of other ESP-WROVER-KIT versions, please check *ESP32 Hardware Reference*.

What You Need

- *ESP-WROVER-KIT V3 board*
- USB 2.0 cable（A to Micro-B）
- Computer running Windows, Linux, or macOS

You can skip the introduction sections and go directly to Section *Start Application Development*.

Overview ESP-WROVER-KIT is an ESP32-based development board produced by Espressif. This board features an integrated LCD screen and MicroSD card slot.

ESP-WROVER-KIT comes with the following ESP32 modules:

- ESP32-WROOM-32
- ESP32-WROVER series

Its another distinguishing feature is the embedded FTDI FT2232HL chip - an advanced multi-interface USB bridge. This chip enables to use JTAG for direct debugging of ESP32 through the USB interface without a separate JTAG debugger. ESP-WROVER-KIT makes development convenient, easy, and cost-effective.

Most of the ESP32 I/O pins are broken out to the board's pin headers for easy access.

Note: The version with the ESP32-WROVER module uses ESP32's GPIO16 and GPIO17 as chip select and clock signals for PSRAM. By default, the two GPIOs are not broken out to the board's pin headers in order to ensure reliable performance.

Functionality Overview The block diagram below shows the main components of ESP-WROVER-KIT and their interconnections.

Functional Description The following two figures and the table below describe the key components, interfaces, and controls of the ESP-WROVER-KIT board.

The table below provides description in the following manner:

- Starting from the first picture's top right corner and going clockwise
- Then moving on to the second picture

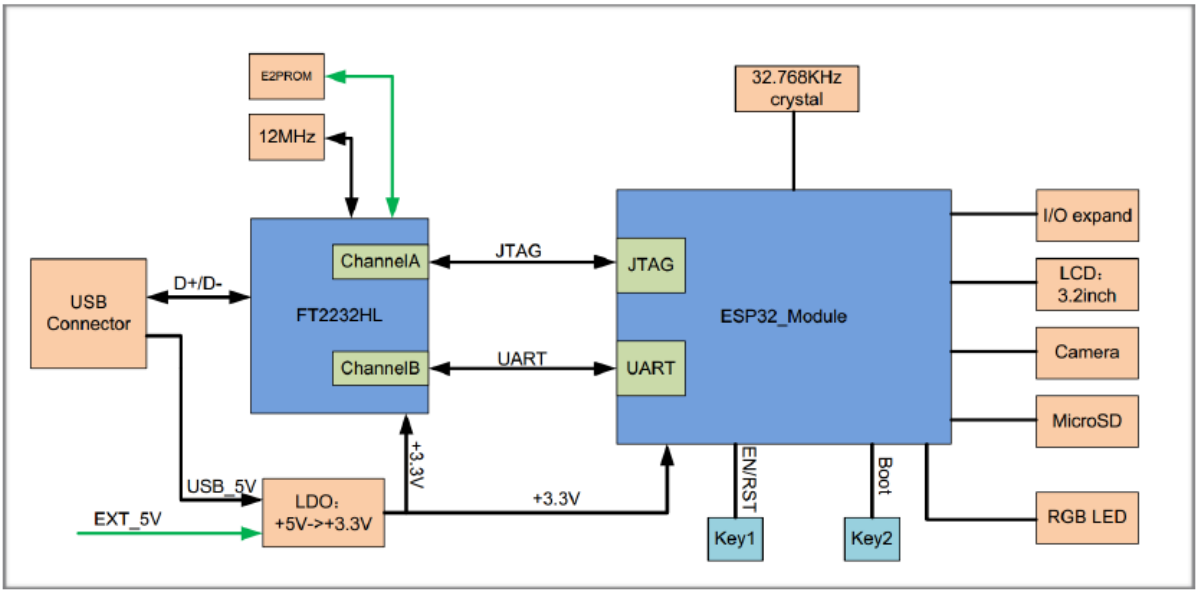

Fig. 10: ESP-WROVER-KIT block diagram

Key Component	Description
32.768 kHz	External precision 32.768 kHz crystal oscillator serves as a clock with low-power consumption while the chip is in Deep-sleep mode.
0R	Zero-ohm resistor intended as a placeholder for a current shunt, can be desoldered or replaced with a current shunt to facilitate the measurement of ESP32's current consumption in different modes.
ESP32 Module	Either ESP32-WROOM-32 or ESP32-WROVER with an integrated ESP32. The ESP32-WROVER module features all the functions of ESP32-WROOM-32 and integrates an external 32-MBit PSRAM for flexible extended storage and data processing capabilities.
FT2232	The FT2232 chip serves as a multi-protocol USB-to-serial bridge which can be programmed and controlled via USB to provide communication with ESP32. FT2232 also features USB-to-JTAG interface which is available on channel A of the chip, while USB-to-serial is on channel B. The FT2232 chip enhances user-friendliness in terms of application development and debugging. See ESP-WROVER-KIT V3 schematic.
UART	Serial port. The serial TX/RX signals of FT2232 and ESP32 are broken out to the inward and outward sides of JP11 respectively. By default, these pairs of pins are connected with jumpers. To use ESP32's serial interface, remove the jumpers and connect another external serial device to the respective pins.
SPI	By default, ESP32 uses its SPI interface to access flash and PSRAM memory inside the module. Use these pins to connect ESP32 to another SPI device. In this case, an extra chip select (CS) signal is needed. Please note that the interface voltage for the version with ESP32-WROVER is 1.8V, while that for the version with ESP32-WROOM-32 is 3.3V.
CTS/RTS	Serial port flow control signals: the pins are not connected to the circuitry by default. To enable them, short the respective pins of JP14 with jumpers.
JTAG	JTAG interface. JTAG signals of FT2232 and ESP32 are broken out to the inward and outward sides of JP8 respectively. By default, these pairs of pins are disconnected. To enable JTAG, short the respective pins with jumpers as shown in Section *Setup Options*.
EN	Reset button.
Boot	Download button. Holding down **Boot** and then pressing **EN** initiates Firmware Download mode for downloading firmware through the serial port.
USB	USB interface. Power supply for the board as well as the communication interface between a computer and the board.
Power Key	Power On/Off Switch. Toggling toward **USB** powers the board on, toggling away from **USB** powers the board off.
Power Select	Power supply selector interface. The board can be powered either via USB or via the 5V Input interface. Select the power source with a jumper. For more details, see Section *Setup Options*, jumper header JP7.
5V Input	The 5V power supply interface can be more convenient when the board is operating autonomously (not connected to a computer).

Submit Document Feedback

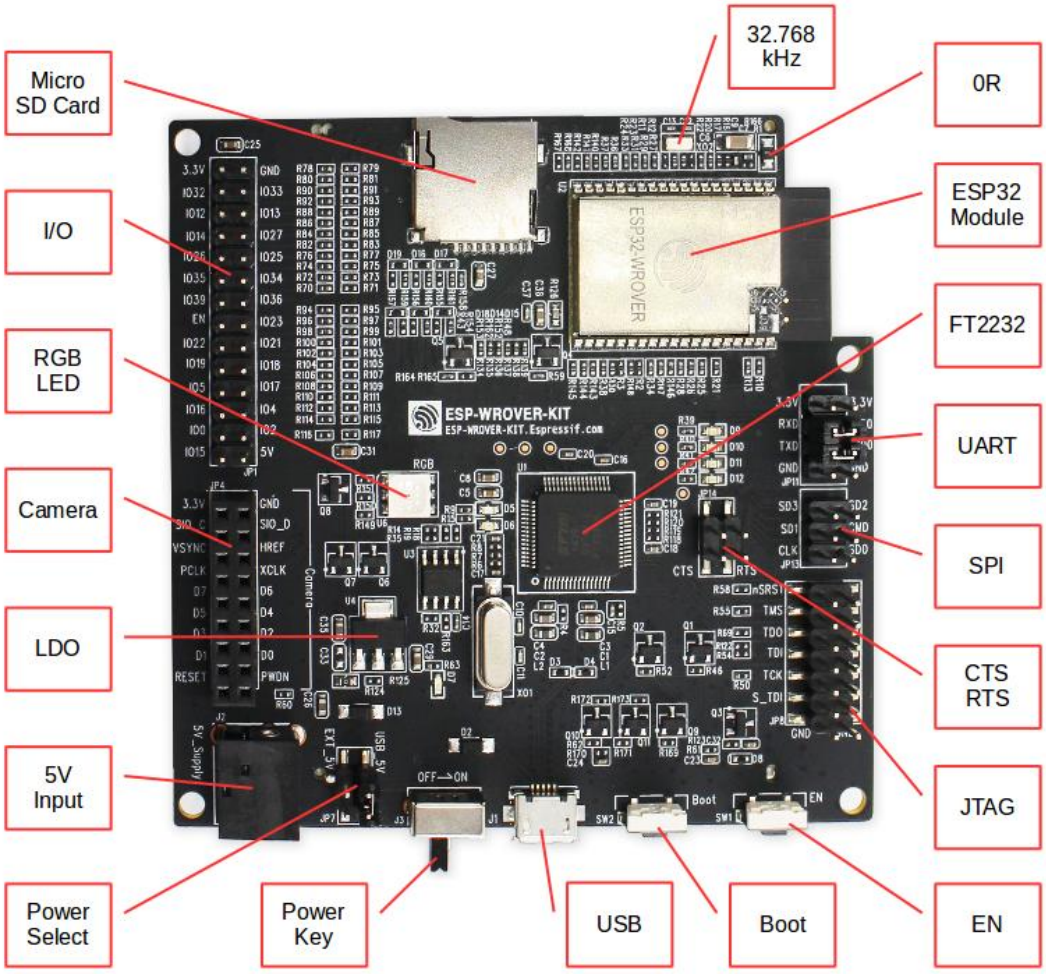

Fig. 11: ESP-WROVER-KIT board layout - front

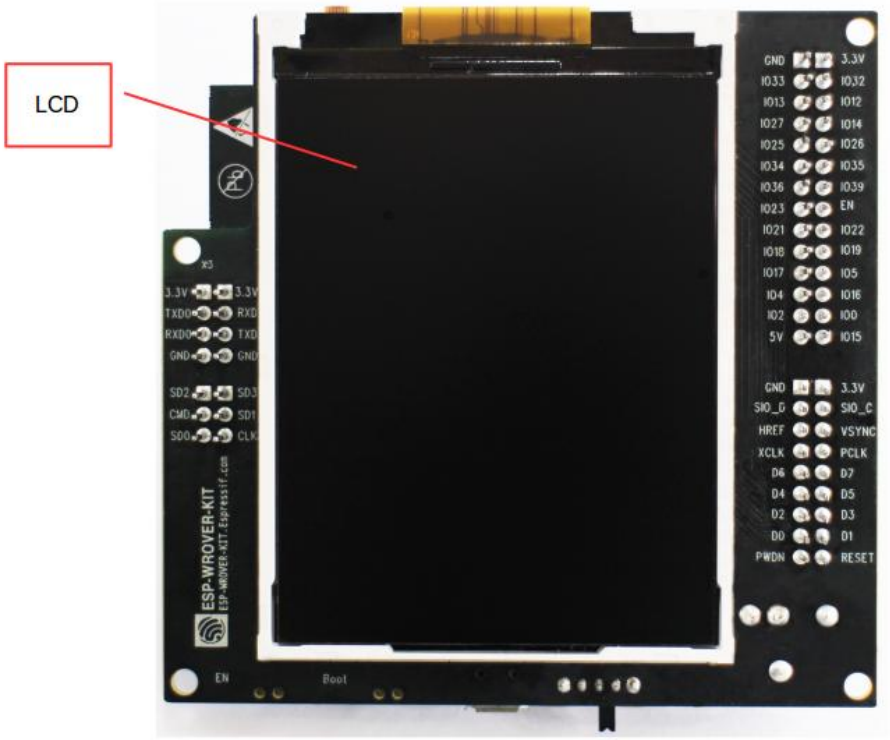

Fig. 12: ESP-WROVER-KIT board layout - back

Setup Options There are five jumper blocks available to set up the board functionality. The most frequently required options are listed in the table below.

Header	Jumper Setting	Description of Functionality
JP7	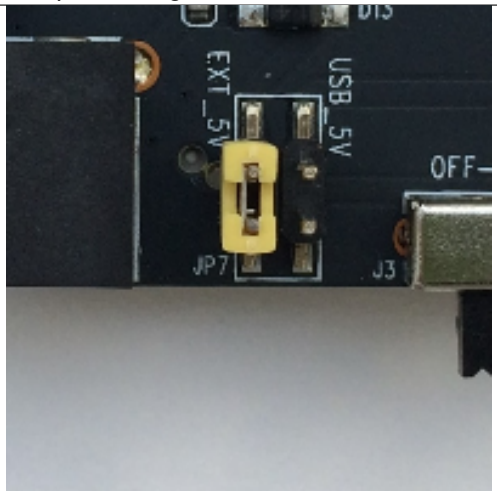	Power ESP-WROVER-KIT via an external power supply
JP7	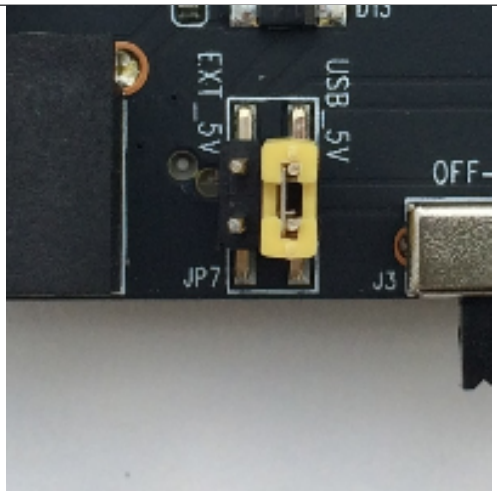	Power ESP-WROVER-KIT via USB
JP8	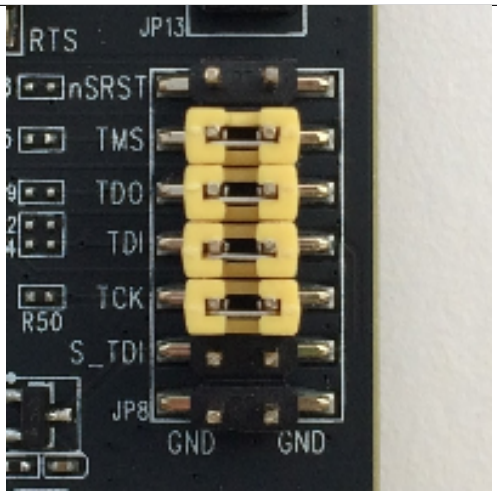	Enable JTAG functionality
JP11	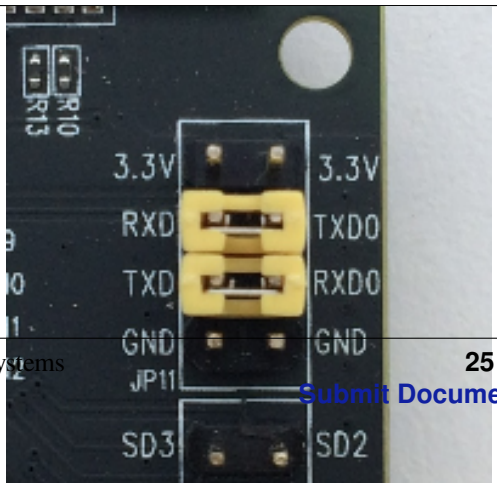	Enable UART communication

Allocation of ESP32 Pins Some pins / terminals of ESP32 are allocated for use with the onboard or external hardware. If that hardware is not used, e.g., nothing is plugged into the Camera (JP4) header, then these GPIOs can be used for other purposes.

Some of the pins, such as GPIO0 or GPIO2, have multiple functions and some of them are shared among onboard and external peripheral devices. Certain combinations of peripherals cannot work together. For example, it is not possible to do JTAG debugging of an application that is using SD card, because several pins are shared by JTAG and the SD card slot.

In other cases, peripherals can coexist under certain conditions. This is applicable to, for example, LCD screen and SD card that share only a single pin GPIO21. This pin is used to provide D/C (Data / Control) signal for the LCD as well as the CD (Card Detect) signal read from the SD card slot. If the card detect functionality is not essential, then it may be disabled by removing R167, so both LCD and SD may operate together.

For more details on which pins are shared among which peripherals, please refer to the table in the next section.

Main I/O Connector / JP1 The JP1 connector consists of 14x2 male pins whose functions are shown in the middle two "I/O" columns of the table below. The two "Shared With" columns on both sides describe where else on the board a certain GPIO is used.

Shared With	I/O	I/O	Shared With
n/a	3.3V	GND	n/a
NC/XTAL	IO32	IO33	NC/XTAL
JTAG, MicroSD	IO12	IO13	JTAG, MicroSD
JTAG, MicroSD	IO14	IO27	Camera
Camera	IO26	IO25	Camera, LCD
Camera	IO35	IO34	Camera
Camera	IO39	IO36	Camera
JTAG	EN	IO23	Camera, LCD
Camera, LCD	IO22	IO21	Camera, LCD, MicroSD
Camera, LCD	IO19	IO18	Camera, LCD
Camera, LCD	IO5	IO17	PSRAM
PSRAM	IO16	IO4	LED, Camera, MicroSD
Camera, LED, Boot	IO0	IO2	LED, MicroSD
JTAG, MicroSD	IO15	5V	

Legend:

- NC/XTAL - *32.768 kHz Oscillator*
- JTAG - *JTAG / JP8*
- Boot - Boot button / SW2
- Camera - *Camera / JP4*
- LED - *RGB LED*
- MicroSD - *MicroSD Card / J4*
- LCD - *LCD / U5*
- PSRAM - only in case ESP32-WROVER is installed

32.768 kHz Oscillator

.	ESP32 Pin
1	GPIO32
2	GPIO33

Note: Since GPIO32 and GPIO33 are connected to the oscillator by default, they are not connected to the JP1 I/O connector to maintain signal integrity. This allocation may be changed from the oscillator to JP1 by desoldering the zero-ohm resistors from positions R11 / R23 and re-soldering them to positions R12 / R24.

SPI Flash / JP13

.	ESP32 Pin
1	CLK / GPIO6
2	SD0 / GPIO7
3	SD1 / GPIO8
4	SD2 / GPIO9
5	SD3 / GPIO10
6	CMD / GPIO11

Important: The module's flash bus is connected to the jumper block JP13 through zero-ohm resistors R140 ~ R145. If the flash memory needs to operate at the frequency of 80 MHz, for reasons such as improving the integrity of bus signals, you can desolder these resistors to disconnect the module's flash bus from the pin header JP13.

JTAG / JP8

.	ESP32 Pin	JTAG Signal
1	EN	TRST_N
2	MTMS / GPIO14	TMS
3	MTDO / GPIO15	TDO
4	MTDI / GPIO12	TDI
5	MTCK / GPIO13	TCK

Camera / JP4

.	ESP32 Pin	Camera Signal
1	n/a	3.3V
2	n/a	Ground
3	GPIO27	SIO_C / SCCB Clock
4	GPIO26	SIO_D / SCCB Data
5	GPIO25	VSYNC / Vertical Sync
6	GPIO23	HREF / Horizontal Reference
7	GPIO22	PCLK / Pixel Clock
8	GPIO21	XCLK / System Clock
9	GPIO35	D7 / Pixel Data Bit 7
10	GPIO34	D6 / Pixel Data Bit 6
11	GPIO39	D5 / Pixel Data Bit 5
12	GPIO36	D4 / Pixel Data Bit 4
13	GPIO19	D3 / Pixel Data Bit 3
14	GPIO18	D2 / Pixel Data Bit 2
15	GPIO5	D1 / Pixel Data Bit 1
16	GPIO4	D0 / Pixel Data Bit 0
17	GPIO0	RESET / Camera Reset
18	n/a	PWDN / Camera Power Down

- Signals D0 .. D7 denote camera data bus

RGB LED

.	ESP32 Pin	RGB LED
1	GPIO0	Red
2	GPIO2	Green
3	GPIO4	Blue

MicroSD Card

.	ESP32 Pin	MicroSD Signal
1	MTDI / GPIO12	DATA2
2	MTCK / GPIO13	CD / DATA3
3	MTDO / GPIO15	CMD
4	MTMS / GPIO14	CLK
5	GPIO2	DATA0
6	GPIO4	DATA1
7	GPIO21	CD

LCD / U5

.	ESP32 Pin	LCD Signal
1	GPIO18	RESET
2	GPIO19	SCL
3	GPIO21	D/C
4	GPIO22	CS
5	GPIO23	SDA
6	GPIO25	SDO
7	GPIO5	Backlight

Start Application Development Before powering up your ESP-WROVER-KIT, please make sure that the board is in good condition with no obvious signs of damage.

Initial Setup Please set only the following jumpers shown in the pictures below:

- Select USB as the power source using the jumper block JP7.
- Enable UART communication using the jumper block JP11.

Power up from USB port	Enable UART communication
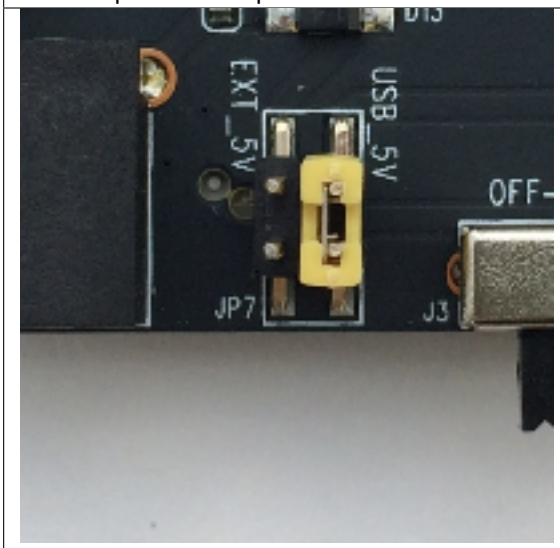	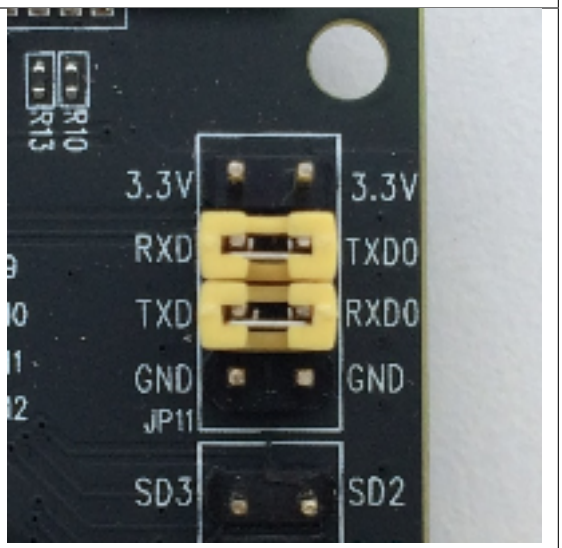

Do not install any other jumpers.

Turn the **Power Switch** to ON, the **5V Power On LED** should light up.

Now to Development Please proceed to *Get Started*, where Section *Installation Step by Step* will quickly help you set up the development environment and then flash an example project onto your board.

Related Documents

- ESP-WROVER-KIT V3 schematic (PDF)
- ESP32 Datasheet (PDF)
- ESP32-WROVER Datasheet (PDF)
- ESP32-WROOM-32 Datasheet (PDF)
- *JTAG Debugging*
- *ESP32 Hardware Reference*

ESP-WROVER-KIT V2 Getting Started Guide

This guide shows how to get started with the ESP-WROVER-KIT V2 development board and also provides information about its functionality and configuration options. For the description of other ESP-WROVER-KIT versions, please check *ESP32 Hardware Reference*.

What You Need

- ESP-WROVER-KIT V2 board
- USB 2.0 cable（A to Micro-B）
- Computer running Windows, Linux, or macOS

You can skip the introduction sections and go directly to Section *Start Application Development*.

Overview ESP-WROVER-KIT is an ESP32-based development board produced by Espressif. This board features an integrated LCD screen and MicroSD card slot.

ESP-WROVER-KIT comes with the following ESP32 modules:

- ESP32-WROOM-32
- ESP32-WROVER series

Its another distinguishing feature is the embedded FTDI FT2232HL chip - an advanced multi-interface USB bridge. This chip enables to use JTAG for direct debugging of ESP32 through the USB interface without a separate JTAG debugger. ESP-WROVER-KIT makes development convenient, easy, and cost-effective.

Most of the ESP32 I/O pins are broken out to the board's pin headers for easy access.

Note: The version with the ESP32-WROVER module uses ESP32's GPIO16 and GPIO17 as chip select and clock signals for PSRAM. By default, the two GPIOs are not broken out to the board's pin headers in order to ensure reliable performance.

Functionality Overview The block diagram below shows the main components of ESP-WROVER-KIT and their interconnections.

Functional Description The following two figures and the table below describe the key components, interfaces, and controls of the ESP-WROVER-KIT board.

The table below provides description in the following manner:

- Starting from the first picture's top right corner and going clockwise
- Then moving on to the second picture

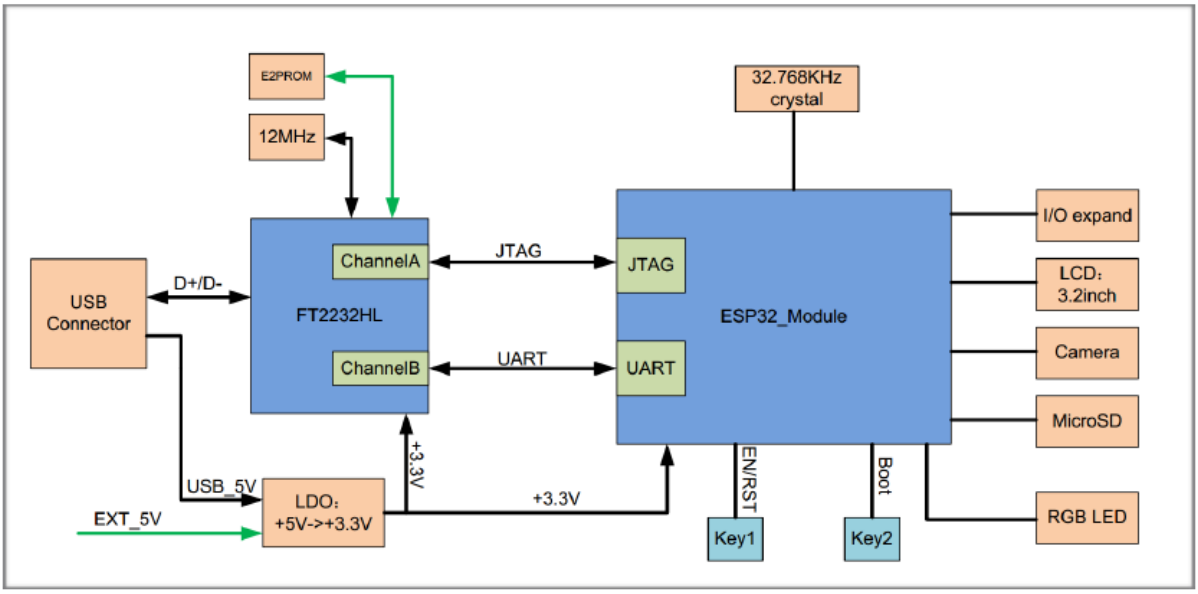

Fig. 13: ESP-WROVER-KIT block diagram

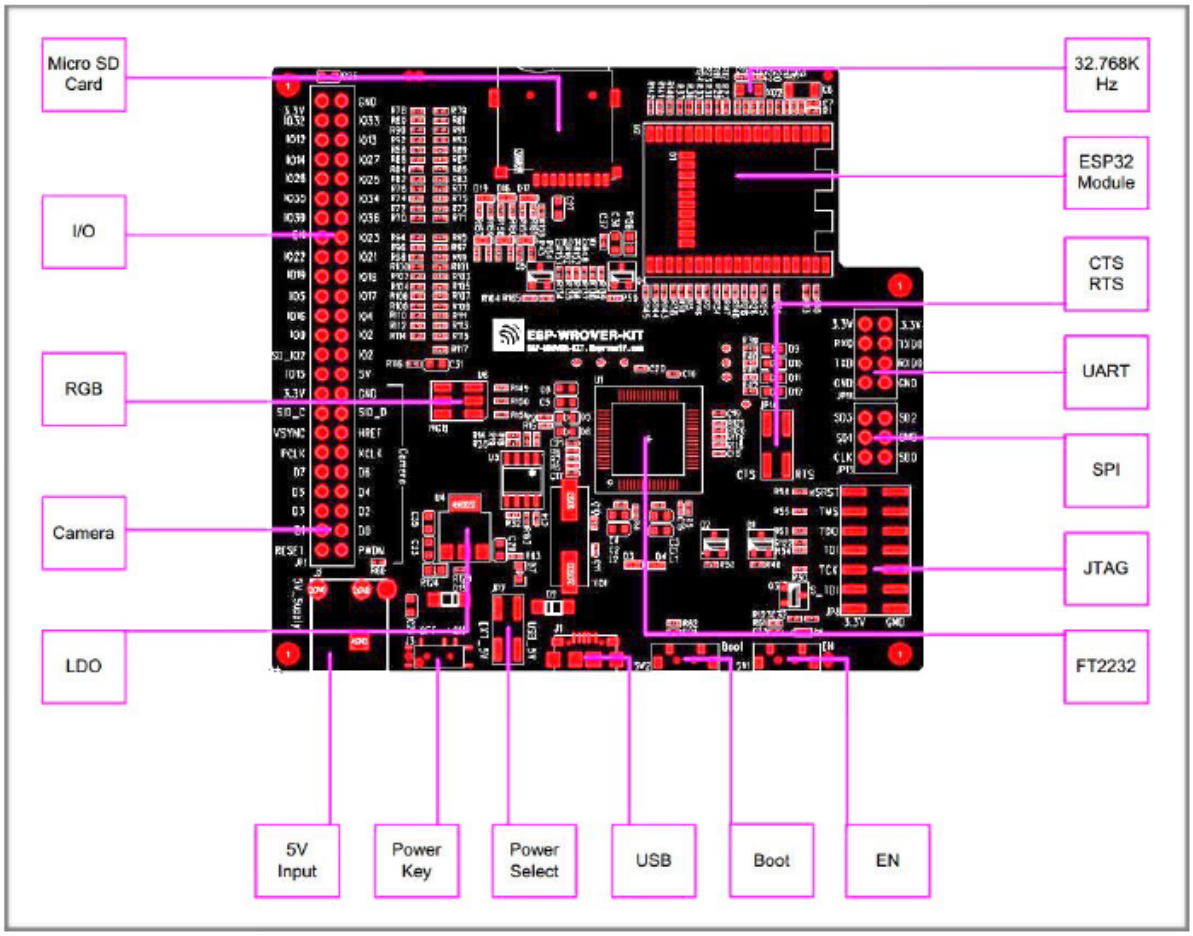

Fig. 14: ESP-WROVER-KIT board layout - front

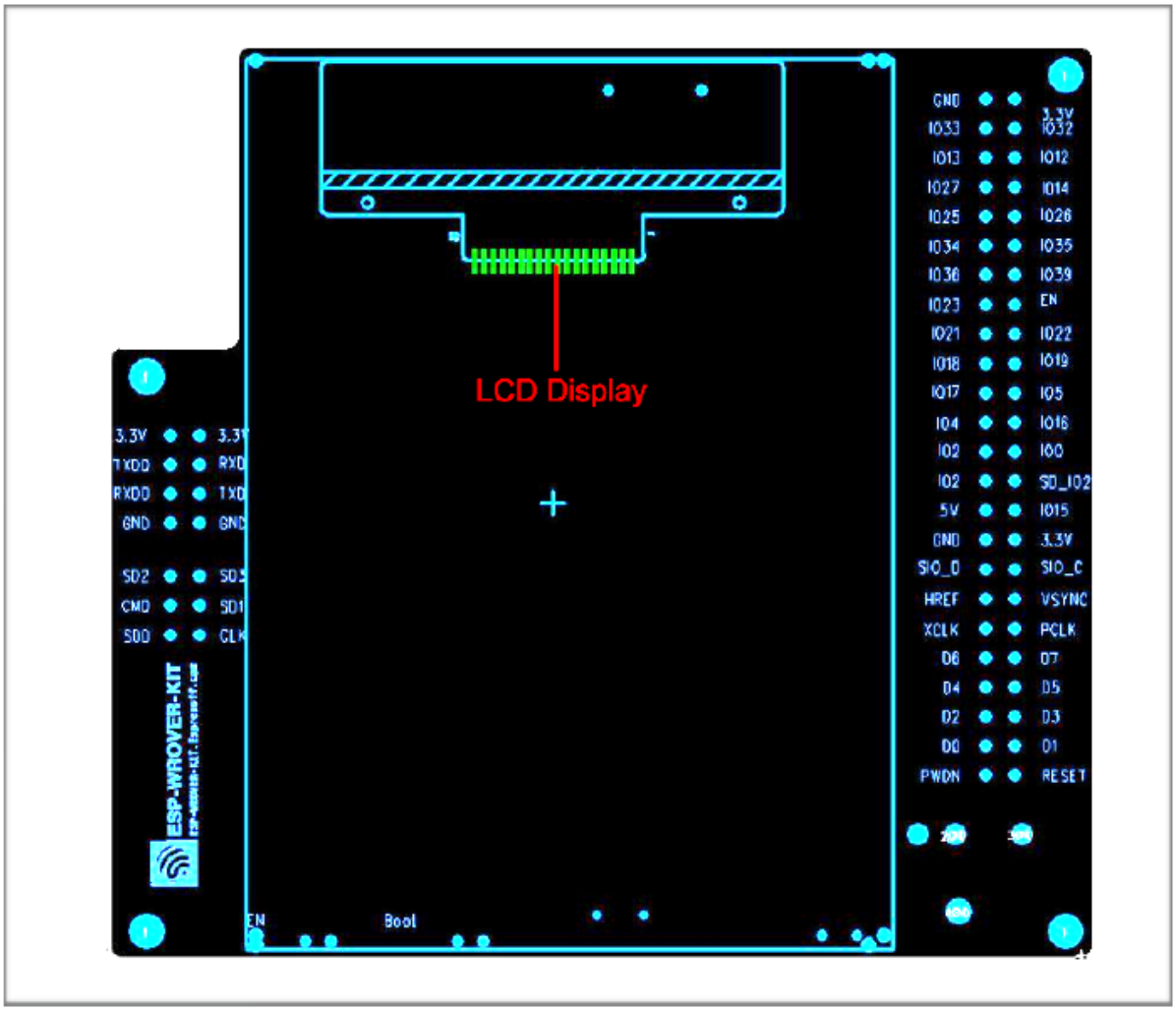

Fig. 15: ESP-WROVER-KIT board layout - back

Key Component	Description
32.768 kHz	External precision 32.768 kHz crystal oscillator serves as a clock with low-power consumption while the chip is in Deep-sleep mode.
ESP32 Module	Either ESP32-WROOM-32 or ESP32-WROVER with an integrated ESP32. The ESP32-WROVER module features all the functions of ESP32-WROOM-32 and integrates an external 32-MBit PSRAM for flexible extended storage and data processing capabilities.
CTS/RTS	Serial port flow control signals: the pins are not connected to the circuitry by default. To enable them, short the respective pins of JP14 with jumpers.
UART	Serial port. The serial TX/RX signals of FT2232 and ESP32 are broken out to the inward and outward sides of JP11 respectively. By default, these pairs of pins are connected with jumpers. To use ESP32' s serial interface, remove the jumpers and connect another external serial device to the respective pins.
SPI	By default, ESP32 uses its SPI interface to access flash and PSRAM memory inside the module. Use these pins to connect ESP32 to another SPI device. In this case, an extra chip select (CS) signal is needed. Please note that the interface voltage for the version with ESP32-WROVER is 1.8V, while that for the version with ESP32-WROOM-32 is 3.3V.
JTAG	JTAG interface. JTAG signals of FT2232 and ESP32 are broken out to the inward and outward sides of JP8 respectively. By default, these pairs of pins are disconnected. To enable JTAG, short the respective pins with jumpers as shown in Section *Setup Options*.
FT2232	The FT2232 chip serves as a multi-protocol USB-to-serial bridge which can be programmed and controlled via USB to provide communication with ESP32. FT2232 features USB-to-UART and USB-to-JTAG functionalities.
EN	Reset button.
Boot	Download button. Holding down **Boot** and then pressing **EN** initiates Firmware Download mode for downloading firmware through the serial port.
USB	USB interface. Power supply for the board as well as the communication interface between a computer and the board.
Power Select	Power supply selector interface. The board can be powered either via USB or via the 5V Input interface. Select the power source with a jumper. For more details, see Section *Setup Options*, jumper header JP7.
Power Key	Power On/Off Switch. Toggling toward **USB** powers the board on, toggling away from **USB** powers the board off.
5V Input	The 5V power supply interface can be more convenient when the board is operating autonomously (not connected to a computer).
LDO	NCP1117(1A). 5V-to-3.3V LDO. NCP1117 can provide a maximum current of 1A. The LDO on the board has a fixed output voltage. Although, the user can install an LDO with adjustable output voltage. For details, please refer to ESP-WROVER-KIT V2 schematic.
Camera	Camera interface, a standard OV7670 camera module.
RGB	Red, green and blue (RGB) light emitting diodes (LEDs), can be controlled by pulse width modulation (PWM).
I/O	All the pins on the ESP32 module are broken out to pin headers. You can program ESP32 to enable multiple functions, such as PWM, ADC, DAC, I2C, I2S, SPI, etc.
MicroSD Card	MicroSD card slot for data storage: when ESP32 enters the download mode, GPIO2 cannot be held high. However, a pull-up resistor is required on GPIO2 to enable the MicroSD Card. By default, GPIO2 and the pull-up resistor R153 are disconnected. To enable the SD Card, use jumpers on JP1 as shown in Section *Setup Options*.
LCD	Support for mounting and interfacing a 3.2" SPI (standard 4-wire Serial Peripheral Interface) LCD, as shown on figure *ESP-WROVER-KIT board layout - back*.

Setup Options There are five jumper blocks available to set up the board functionality. The most frequently required options are listed in the table below.

Header	Jumper Setting	Description of Functionality
JP1	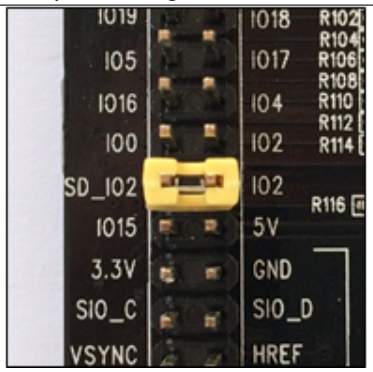	Enable pull up for the MicroSD Card
JP1	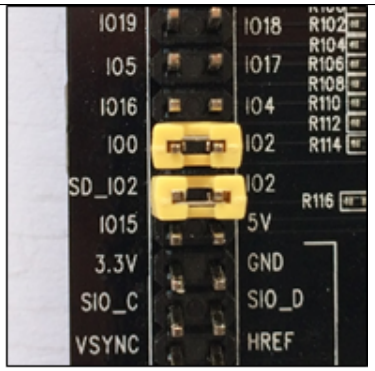	Assert GPIO2 low during each download (by jumping it to GPIO0)
JP7	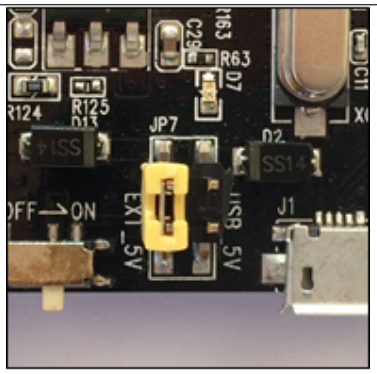	Power ESP-WROVER-KIT via an external power supply
JP7	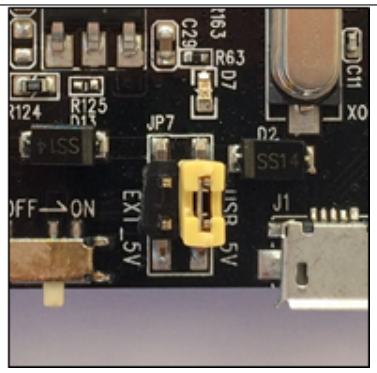	Power ESP-WROVER-KIT via USB
JP8	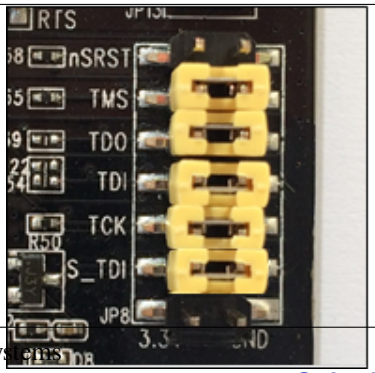	Enable JTAG functionality
JP8	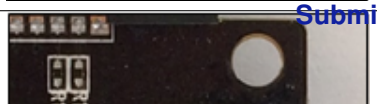	

Start Application Development Before powering up your ESP-WROVER-KIT, please make sure that the board is in good condition with no obvious signs of damage.

Initial Setup Please set only the following jumpers shown in the pictures below:

- Select USB as the power source using the jumper block JP7.
- Enable UART communication using the jumper block JP11.

Power up from USB port	Enable UART communication
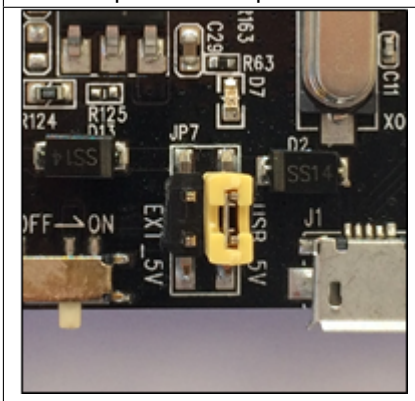	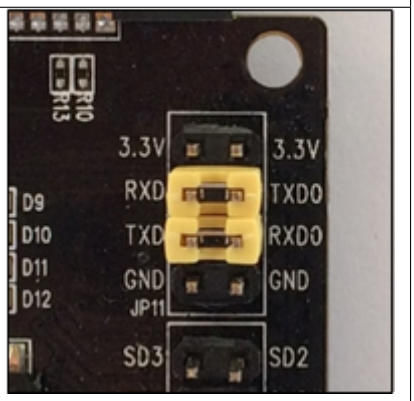

Do not install any other jumpers.

Turn the **Power Switch** to ON, the **5V Power On LED** should light up.

Now to Development Please proceed to *Get Started*, where Section *Installation Step by Step* will quickly help you set up the development environment and then flash an example project onto your board.

Related Documents

- ESP-WROVER-KIT V2 schematic (PDF)
- ESP32 Datasheet (PDF)
- ESP32-WROVER Datasheet (PDF)
- ESP32-WROOM-32 Datasheet (PDF)
- *JTAG Debugging*
- *ESP32 Hardware Reference*

1.3.3 ESP32-PICO-KIT V4 / V4.1 Getting Started Guide

This guide shows how to get started with the ESP32-PICO-KIT V4 / V4.1 mini development board. For the description of other ESP32-PICO-KIT versions, please check *ESP32 Hardware Reference*.

This particular description covers ESP32-PICO-KIT V4 and V4.1. The difference is the upgraded USB-UART bridge from CP2102 in V4 with up to 1 Mbps transfer rates to CP2102N in V4.1 with up to 3 Mbps transfer rates.

What You Need

- *ESP32-PICO-KIT mini development board*
- USB 2.0 A to Micro B cable
- Computer running Windows, Linux, or macOS

You can skip the introduction sections and go directly to Section *Start Application Development*.

Overview

ESP32-PICO-KIT is an ESP32-based mini development board produced by Espressif.

The core of this board is ESP32-PICO-D4 - a System-in-Package (SiP) module with complete Wi-Fi and Bluetooth functionalities. Compared to other ESP32 modules, ESP32-PICO-D4 integrates the following peripheral components in one single package, which otherwise would need to be installed separately:

- 40 MHz crystal oscillator
- 4 MB flash
- Filter capacitors
- RF matching links

This setup reduces the costs of additional external components as well as the cost of assembly and testing and also increases the overall usability of the product.

The development board features a USB-UART Bridge circuit which allows developers to connect the board to a computer's USB port for flashing and debugging.

All the IO signals and system power on ESP32-PICO-D4 are led out to two rows of 20 x 0.1" header pads on both sides of the development board for easy access. For compatibility with Dupont wires, 2 x 17 header pads are populated with two rows of male pin headers. The remaining 2 x 3 header pads beside the antenna are not populated. These pads may be populated later by the user if required.

Note:

1. The 2 x 3 pads not populated with pin headers are connected to the flash memory embedded in the ESP32-PICO-D4 SiP module. For more details see module's datasheet in *Related Documents*.
2. ESP32-PICO-KIT comes with male headers by default.

Functionality Overview

The block diagram below shows the main components of ESP32-PICO-KIT and their interconnections.

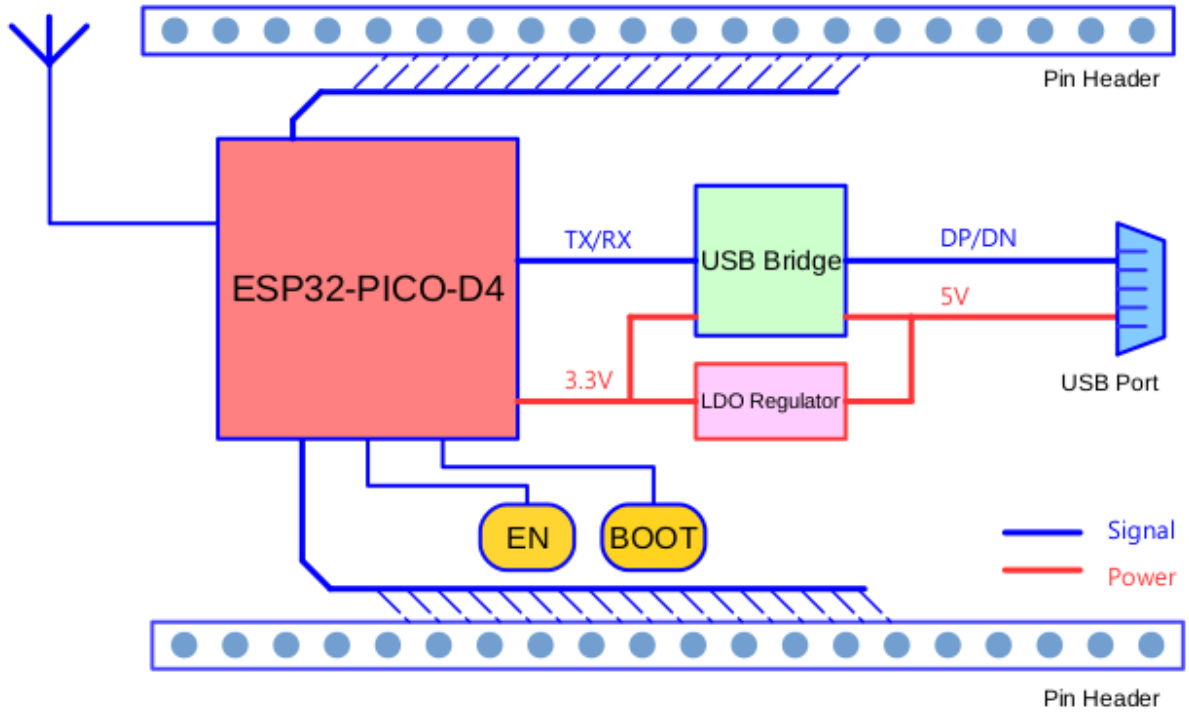

Fig. 16: ESP32-PICO-KIT block diagram

Functional Description

The following figure and the table below describe the key components, interfaces, and controls of the ESP32-PICO-KIT board.

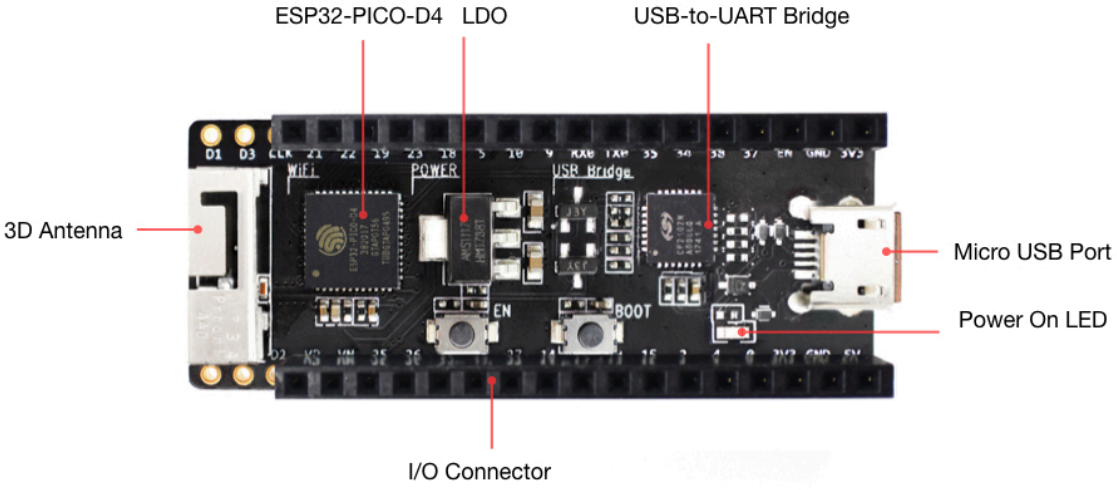

Fig. 17: ESP32-PICO-KIT board layout

Below is the description of the items identified in the figure starting from the top left corner and going clockwise.

Key Component	Description
ESP32-PICO-D4	Standard ESP32-PICO-D4 module soldered to the ESP32-PICO-KIT board. The complete ESP32 system on a chip (ESP32 SoC) has been integrated into the SiP module, requiring only an external antenna with LC matching network, decoupling capacitors, and a pull-up resistor for EN signals to function properly.
LDO	5V-to-3.3V Low dropout voltage regulator (LDO).
USB-UART bridge	Single-chip USB-UART bridge: CP2102 in V4 provides up to 1 Mbps transfer rates and CP2102N in V4.1 offers up to 3 Mbps transfers rates.
Micro USB Port	USB interface. Power supply for the board as well as the communication interface between a computer and the board.
5V Power On LED	This red LED turns on when power is supplied to the board. For details, see the schematics in *Related Documents*.
I/O	All the pins on ESP32-PICO-D4 are broken out to pin headers. You can program ESP32 to enable multiple functions, such as PWM, ADC, DAC, I2C, I2S, SPI, etc. For details, please see Section *Pin Descriptions*.
BOOT Button	Download button. Holding down **Boot** and then pressing **EN** initiates Firmware Download mode for downloading firmware through the serial port.
EN Button	Reset button.

Power Supply Options

There are three mutually exclusive ways to provide power to the board:

- Micro USB port, default power supply
- 5V / GND header pins
- 3V3 / GND header pins

Warning: The power supply must be provided using **one and only one of the options above**, otherwise the board and/or the power supply source can be damaged.

Pin Descriptions

The two tables below provide the **Name** and **Function** of I/O header pins on both sides of the board, see *ESP32-PICO-KIT board layout*. The pin numbering and header names are the same as in the schematic given in *Related Documents*.

Header J2

No.	Name	Type	Function
1	FLASH_SD1 (FSD1)	I/O	GPIO8, SD_DATA1, SPID, HS1_DATA1 *(See 1)* , U2CTS
2	FLASH_SD3 (FSD3)	I/O	GPIO7, SD_DATA0, SPIQ, HS1_DATA0 *(See 1)* , U2RTS
3	FLASH_CLK (FCLK)	I/O	GPIO6, SD_CLK, SPICLK, HS1_CLK *(See 1)* , U1CTS
4	IO21	I/O	GPIO21, VSPIHD, EMAC_TX_EN
5	IO22	I/O	GPIO22, VSPIWP, U0RTS, EMAC_TXD1
6	IO19	I/O	GPIO19, VSPIQ, U0CTS, EMAC_TXD0
7	IO23	I/O	GPIO23, VSPID, HS1_STROBE
8	IO18	I/O	GPIO18, VSPICLK, HS1_DATA7
9	IO5	I/O	GPIO5, VSPICS0, HS1_DATA6, EMAC_RX_CLK
10	IO10	I/O	GPIO10, SD_DATA3, SPIWP, HS1_DATA3, U1TXD
11	IO9	I/O	GPIO9, SD_DATA2, SPIHD, HS1_DATA2, U1RXD
12	RXD0	I/O	GPIO3, U0RXD *(See 3)* , CLK_OUT2
13	TXD0	I/O	

Header J3

No.	Name	Type	Function
1	FLASH_CS (FCS)	I/O	GPIO16, HS1_DATA4 *(See 1)* , U2RXD, EMAC_CLK_OUT
2	FLASH_SD0 (FSD0)	I/O	GPIO17, HS1_DATA5 *(See 1)* , U2TXD, EMAC_CLK_OUT_180
3	FLASH_SD2 (FSD2)	I/O	GPIO11, SD_CMD, SPICS0, HS1_CMD *(See 1)* , U1RTS
4	SENSOR_VP (FSVP)	I	GPIO36, ADC1_CH0, RTC_GPIO0
5	SENSOR_VN (FSVN)	I	GPIO39, ADC1_CH3, RTC_GPIO3
6	IO25	I/O	GPIO25, DAC_1, ADC2_CH8, RTC_GPIO6, EMAC_RXD0
7	IO26	I/O	GPIO26, DAC_2, ADC2_CH9, RTC_GPIO7, EMAC_RXD1
8	IO32	I/O	32K_XP *(See 2a)* , ADC1_CH4, TOUCH9, RTC_GPIO9
9	IO33	I/O	32K_XN *(See 2b)* , ADC1_CH5, TOUCH8, RTC_GPIO8
10	IO27	I/O	GPIO27, ADC2_CH7, TOUCH7, RTC_GPIO17 EMAC_RX_DV
11	IO14	I/O	ADC2_CH6, TOUCH6, RTC_GPIO16, MTMS, HSPICLK,

The following notes give more information about the items in the tables above.

1. This pin is connected to the flash pin of ESP32-PICO-D4.
2. 32.768 kHz crystal oscillator: a) input b) output
3. This pin is connected to the pin of the USB bridge chip on the board.
4. The operating voltage of ESP32-PICO-KIT' s embedded SPI flash is 3.3V. Therefore, the strapping pin MTDI should hold bit zero during the module power-on reset. If connected, please make sure that this pin is not held up on reset.

Start Application Development

Before powering up your ESP32-PICO-KIT, please make sure that the board is in good condition with no obvious signs of damage.

After that, proceed to *Get Started*, where Section *Installation Step by Step* will quickly help you set up the development environment and then flash an example project onto your board.

Board Dimensions

The dimensions are 52 x 20.3 x 10 mm (2.1" x 0.8" x 0.4").

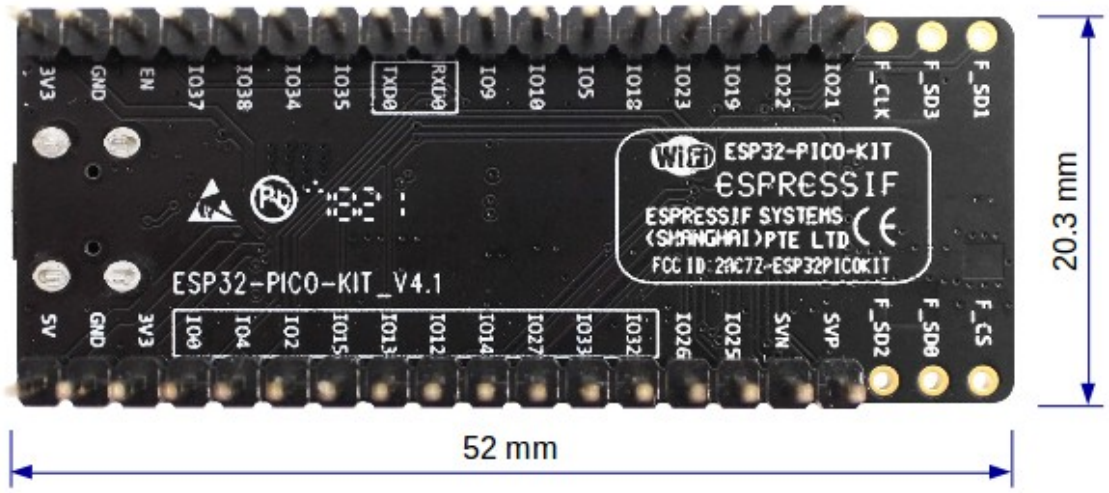

Fig. 18: ESP32-PICO-KIT dimensions - back

For the board physical construction details, please refer to its Reference Design listed below.

Related Documents

- ESP32-PICO-KIT V4 schematic (PDF)
- ESP32-PICO-KIT V4.1 schematic (PDF)
- ESP32-PICO-KIT Reference Design containing OrCAD schematic, PCB layout, gerbers and BOM
- ESP32-PICO-D4 Datasheet (PDF)
- *ESP32 Hardware Reference*

ESP32-PICO-KIT V3 Getting Started Guide

This guide shows how to get started with the ESP32-PICO-KIT V3 mini development board. For the description of other ESP32-PICO-KIT versions, please check *ESP32 Hardware Reference*.

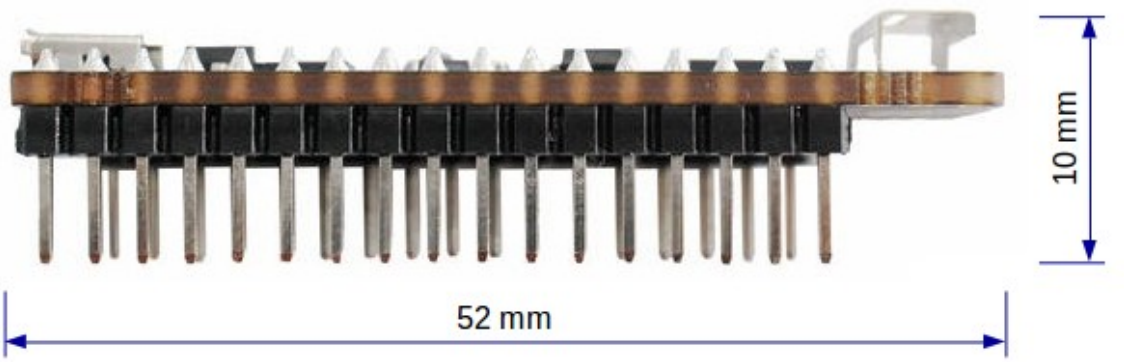

Fig. 19: ESP32-PICO-KIT dimensions - side

What You Need

- ESP32-PICO-KIT V3 mini development board
- USB 2.0 A to Micro B cable
- Computer running Windows, Linux, or macOS

You can skip the introduction sections and go directly to Section *Start Application Development*.

Overview ESP32-PICO-KIT V3 is an ESP32-based mini development board produced by Espressif. The core of this board is ESP32-PICO-D4 - a System-in-Package (SiP) module.

The development board features a USB-UART Bridge circuit, which allows developers to connect the board to a computer's USB port for flashing and debugging.

All the IO signals and system power on ESP32-PICO-D4 are led out to two rows of 20 x 0.1" header pads on both sides of the development board for easy access.

Functional Description The following figure and the table below describe the key components, interfaces, and controls of the ESP32-PICO-KIT V3 board.

Below is the description of the items identified in the figure starting from the top left corner and going clockwise.

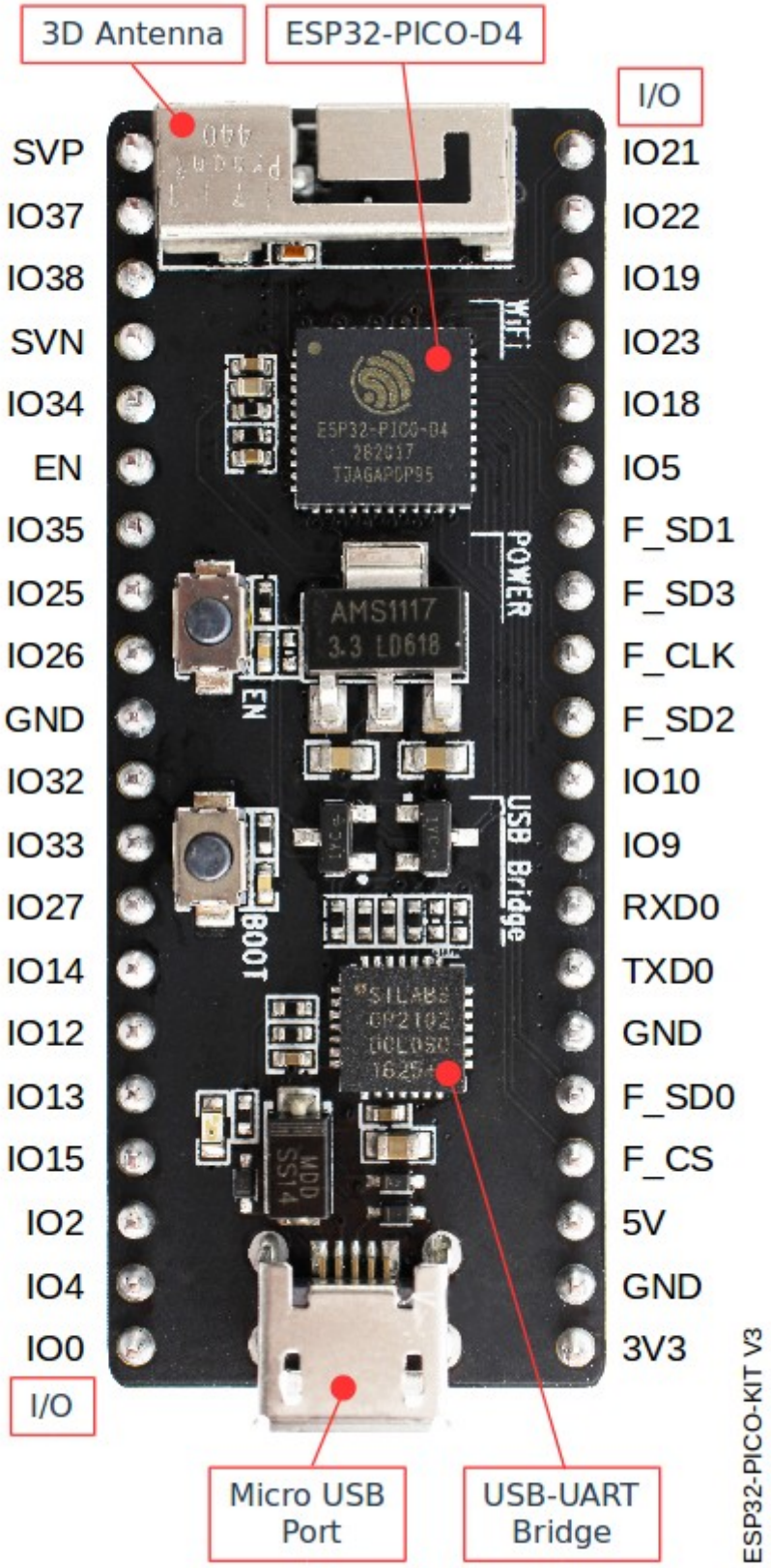

Fig. 20: ESP32-PICO-KIT V3 board layout

Key Component	Description
ESP32-PICO-D4	Standard ESP32-PICO-D4 module soldered to the ESP32-PICO-KIT V3 board. The complete ESP32 system on a chip (ESP32 SoC) has been integrated into the SiP module, requiring only an external antenna with LC matching network, decoupling capacitors, and a pull-up resistor for EN signals to function properly.
LDO	5V-to-3.3V Low dropout voltage regulator (LDO).
USB-UART bridge	Single-chip USB-UART bridge provides up to 1 Mbps transfers rates.
Micro USB Port	USB interface. Power supply for the board as well as the communication interface between a computer and the board.
Power On LED	This red LED turns on when power is supplied to the board.
I/O	All the pins on ESP32-PICO-D4 are broken out to pin headers. You can program ESP32 to enable multiple functions, such as PWM, ADC, DAC, I2C, I2S, SPI, etc.
BOOT Button	Download button. Holding down **Boot** and then pressing **EN** initiates Firmware Download mode for downloading firmware through the serial port.
EN Button	Reset button.

Start Application Development Before powering up your ESP32-PICO-KIT V3, please make sure that the board is in good condition with no obvious signs of damage.

After that, proceed to *Get Started*, where Section *Installation Step by Step* will quickly help you set up the development environment and then flash an example project onto your board.

Related Documents

- ESP32-PICO-KIT V3 schematic (PDF)
- ESP32-PICO-D4 Datasheet (PDF)
- *ESP32 Hardware Reference*

1.3.4 ESP32-Ethernet-Kit V1.2 Getting Started Guide

This guide shows how to get started with the ESP32-Ethernet-Kit development board and also provides information about its functionality and configuration options.

The *ESP32-Ethernet-Kit* is an Ethernet-to-Wi-Fi development board that enables Ethernet devices to be interconnected over Wi-Fi. At the same time, to provide more flexible power supply options, the ESP32-Ethernet-Kit also supports power over Ethernet (PoE).

What You Need

- *ESP32-Ethernet-Kit V1.2 board*
- USB 2.0 A to Micro B Cable
- Computer running Windows, Linux, or macOS

Fig. 21: ESP32-Ethernet-Kit V1.2 Overview (click to enlarge)

You can skip the introduction sections and go directly to Section *Start Application Development*.

Overview

ESP32-Ethernet-Kit is an ESP32-based development board produced by Espressif.

It consists of two development boards, the Ethernet board A and the PoE board B. The *Ethernet board (A)* contains Bluetooth/Wi-Fi dual-mode ESP32-WROVER-E module and IP101GRI, a Single Port 10/100 Fast Ethernet Transceiver (PHY). The *PoE board (B)* provides power over Ethernet functionality. The A board can work independently, without the board B installed.

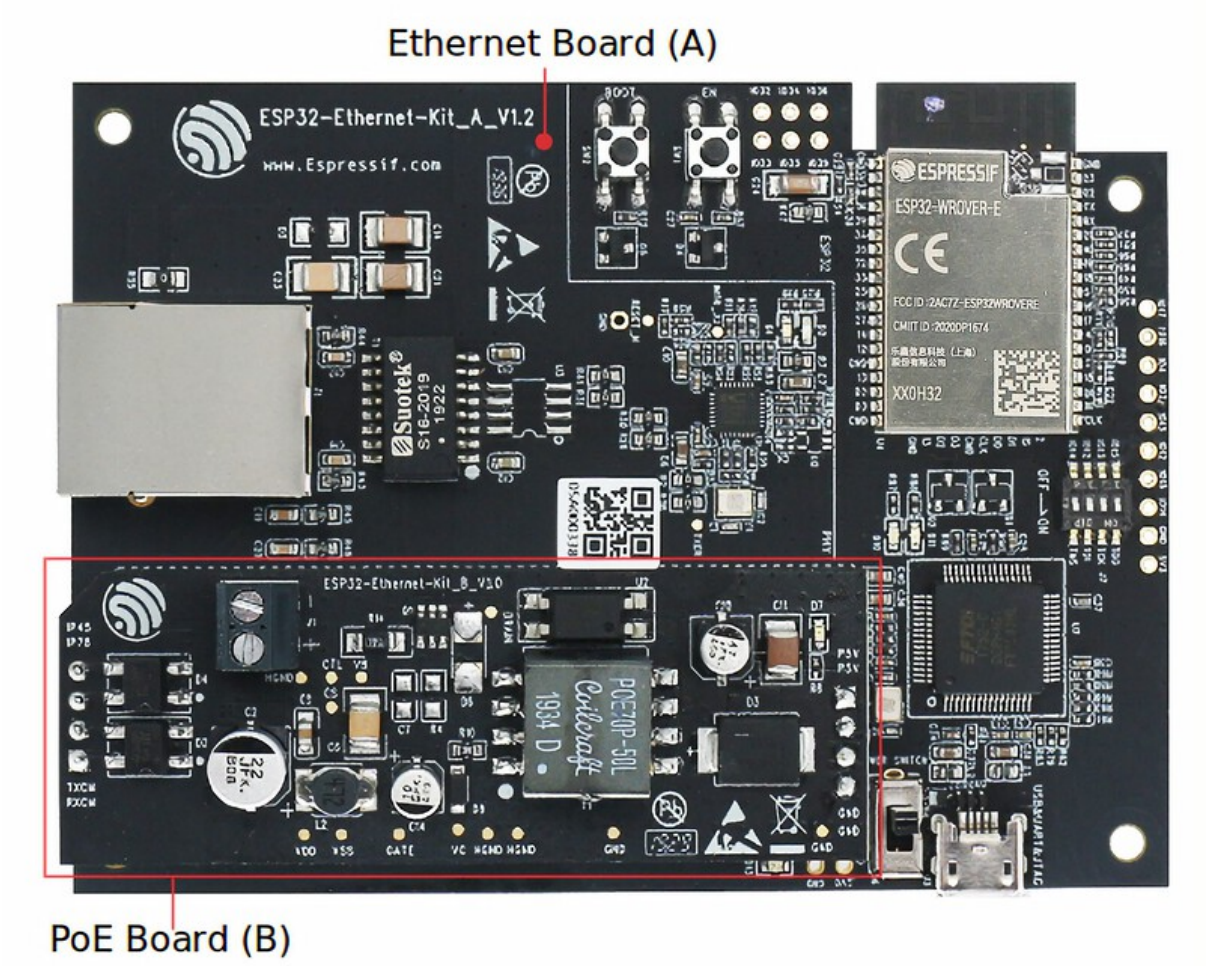

Fig. 22: ESP32-Ethernet-Kit V1.2 (click to enlarge)

For the application loading and monitoring, the Ethernet board (A) also features FTDI FT2232H chip - an advanced multi-interface USB bridge. This chip enables to use JTAG for direct debugging of ESP32 through the USB interface without a separate JTAG debugger.

Functionality Overview

The block diagram below shows the main components of ESP32-Ethernet-Kit and their interconnections.

Functional Description

The following figures and tables describe the key components, interfaces, and controls of the ESP32-Ethernet-Kit.

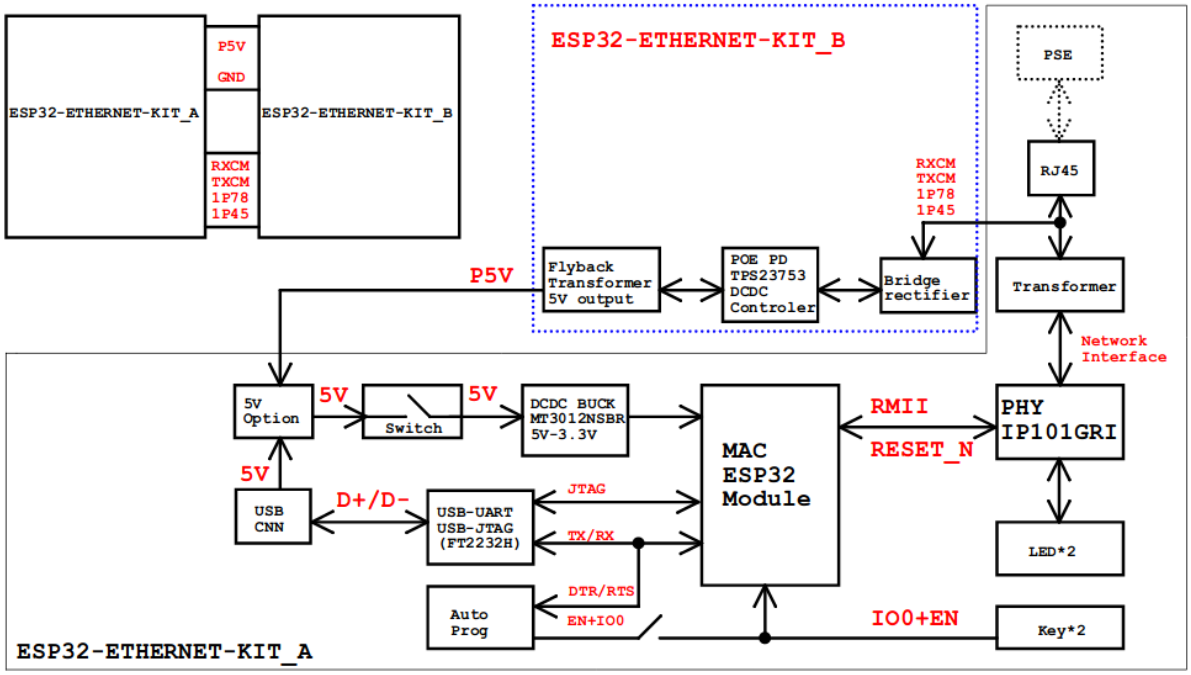

Fig. 23: ESP32-Ethernet-Kit block diagram (click to enlarge)

Ethernet Board (A) The table below provides description starting from the picture ' s top right corner and going clockwise.

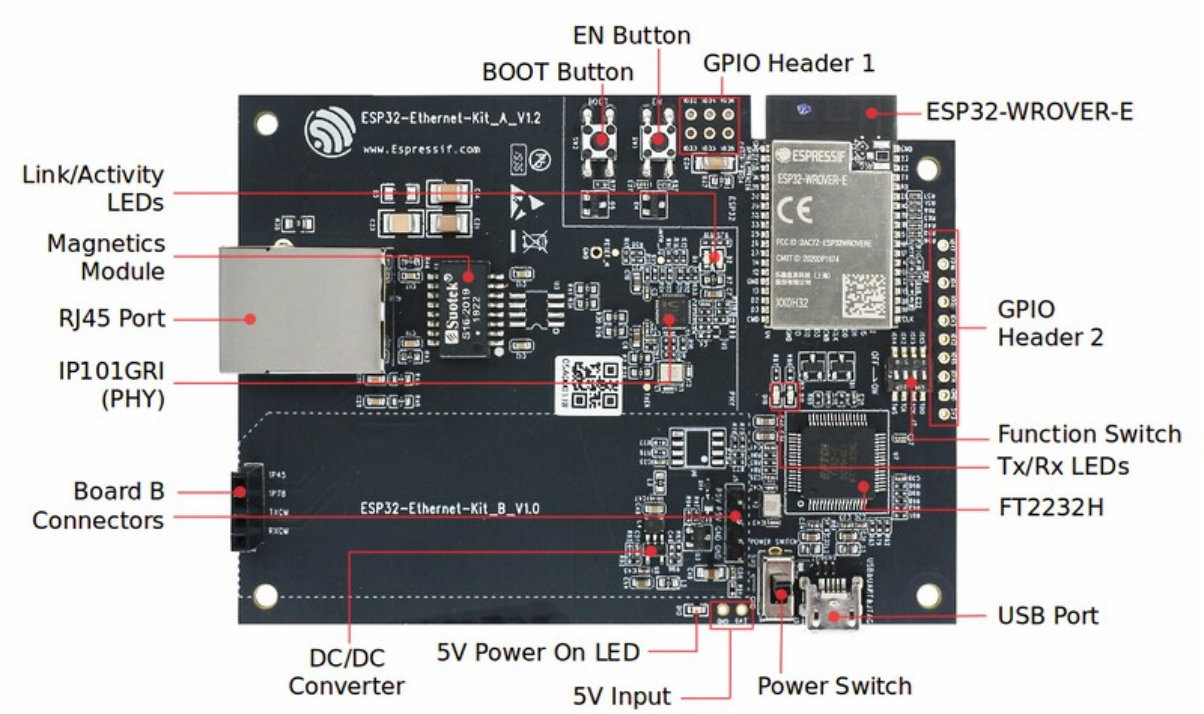

Fig. 24: ESP32-Ethernet-Kit - Ethernet board (A) layout (click to enlarge)

Key Component	Description
ESP32-WROVER-E	This ESP32 module features 64-Mbit PSRAM for flexible extended storage and data processing capabilities.
GPIO Header 2	Five unpopulated through-hole solder pads to provide access to selected GPIOs of ESP32. For details, see *GPIO Header 2*.
Function Switch	A 4-bit DIP switch used to configure the functionality of selected GPIOs of ESP32. For details see *Function Switch*.
Tx/Rx LEDs	Two LEDs to show the status of UART transmission.
FT2232H	The FT2232H chip serves as a multi-protocol USB-to-serial bridge which can be programmed and controlled via USB to provide communication with ESP32. FT2232H also features USB-to-JTAG interface which is available on channel A of the chip, while USB-to-serial is on channel B. The FT2232H chip enhances user-friendliness in terms of application development and debugging. See ESP32-Ethernet-Kit V1.2 Ethernet board (A) schematic.
USB Port	USB interface. Power supply for the board as well as the communication interface between a computer and the board.
Power Switch	Power On/Off Switch. Toggling the switch to **5V0** position powers the board on, toggling to **GND** position powers the board off.
5V Input	The 5V power supply interface can be more convenient when the board is operating autonomously (not connected to a computer).
5V Power On LED	This red LED turns on when power is supplied to the board, either from USB or 5V Input.
DC/DC Converter	Provided DC 5 V to 3.3 V conversion, output current up to 2 A.
Board B Connectors	A pair male and female header pins for mounting the *PoE board (B)*.

Note: Automatic firmware download is supported. If following steps and using software described in Section *Start Application Development*, users don't need to do any operation with BOOT button or EN button.

PoE Board (B) This board coverts power delivered over the Ethernet cable (PoE) to provide a power supply for the Ethernet board (A). The main components of the PoE board (B) are shown on the block diagram under *Functionality Overview*.

The PoE board (B) has the following features:

- Support for IEEE 802.3at
- Power output: 5 V, 1.4 A

To take advantage of the PoE functionality the **RJ45 Port** of the Ethernet board (A) should be connected with an Ethernet cable to a switch that supports PoE. When the Ethernet board (A) detects 5 V power output from the PoE board (B), the USB power will be automatically cut off.

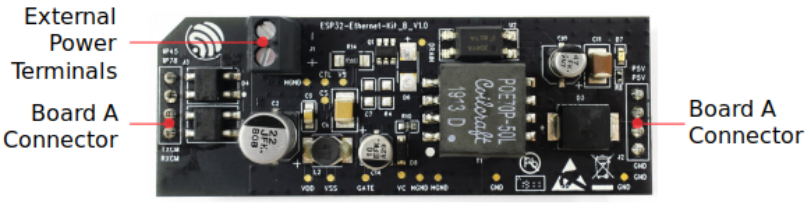

Fig. 25: ESP32-Ethernet-Kit - PoE board (B) layout (click to enlarge)

Table 1: Table PoE board (B)

Key Component	Description
Board A Connector	Four female (left) and four male (right) header pins for connecting the PoE board (B) to *Ethernet board (A)*. The pins on the left accept power coming from a PoE switch. The pins on the right deliver 5 V power supply to the Ethernet board (A).
External Power Terminals	Optional power supply (26.6 ~ 54 V) to the PoE board (B).

Setup Options

This section describes options to configure the ESP32-Ethernet-Kit hardware.

Function Switch When in On position, this DIP switch is routing listed GPIOs to FT2232H to provide JTAG functionality. When in Off position, the GPIOs may be used for other purposes.

DIP SW	GPIO Pin
1	GPIO13
2	GPIO12
3	GPIO15
4	GPIO14

RMII Clock Selection The ethernet MAC and PHY under RMII working mode need a common 50 MHz reference clock (i.e. RMII clock) that can be provided either externally, or generated from internal ESP32 APLL (not recommended).

Note: For additional information on the RMII clock selection, please refer to ESP32-Ethernet-Kit V1.2 Ethernet board (A) schematic, sheet 2, location D2.

RMII Clock Sourced Externally by PHY By default, the ESP32-Ethernet-Kit is configured to provide RMII clock for the IP101GRI PHY's 50M_CLKO output. The clock signal is generated by the frequency multiplication of 25 MHz crystal connected to the PHY. For details, please see the figure below.

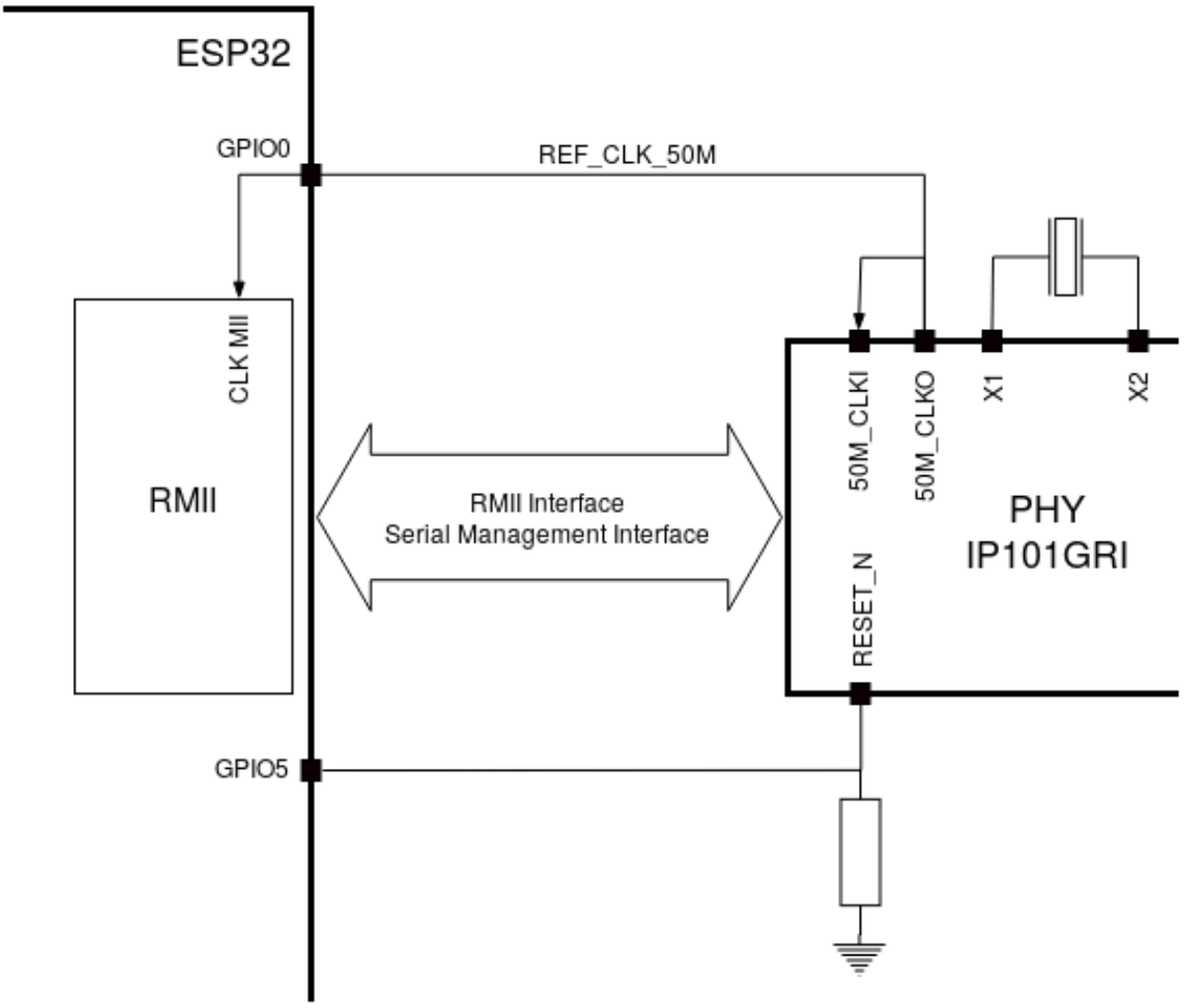

Fig. 26: RMII Clock from IP101GRI PHY

Please note that the PHY is reset on power up by pulling the RESET_N signal down with a resistor. ESP32 should assert RESET_N high with GPIO5 to enable PHY. Only this can ensure the power-up of system. Otherwise ESP32 may enter download mode (when the clock signal of REF_CLK_50M is at a high logic level during the GPIO0 power-up sampling phase).

RMII Clock Sourced Internally from ESP32's APLL Another option is to source the RMII Clock from internal ESP32 APLL, see figure below. The clock signal coming from GPIO0 is first inverted, to account for transmission line delay, and then supplied to the PHY.

To implement this option, users need to remove or add some RC components on the board. For details please refer to ESP32-Ethernet-Kit V1.2 Ethernet board (A) schematic, sheet 2, location D2. Please note that if the APLL is already used for other purposes (e.g. I2S peripheral), then you have no choice but use an external RMII clock.

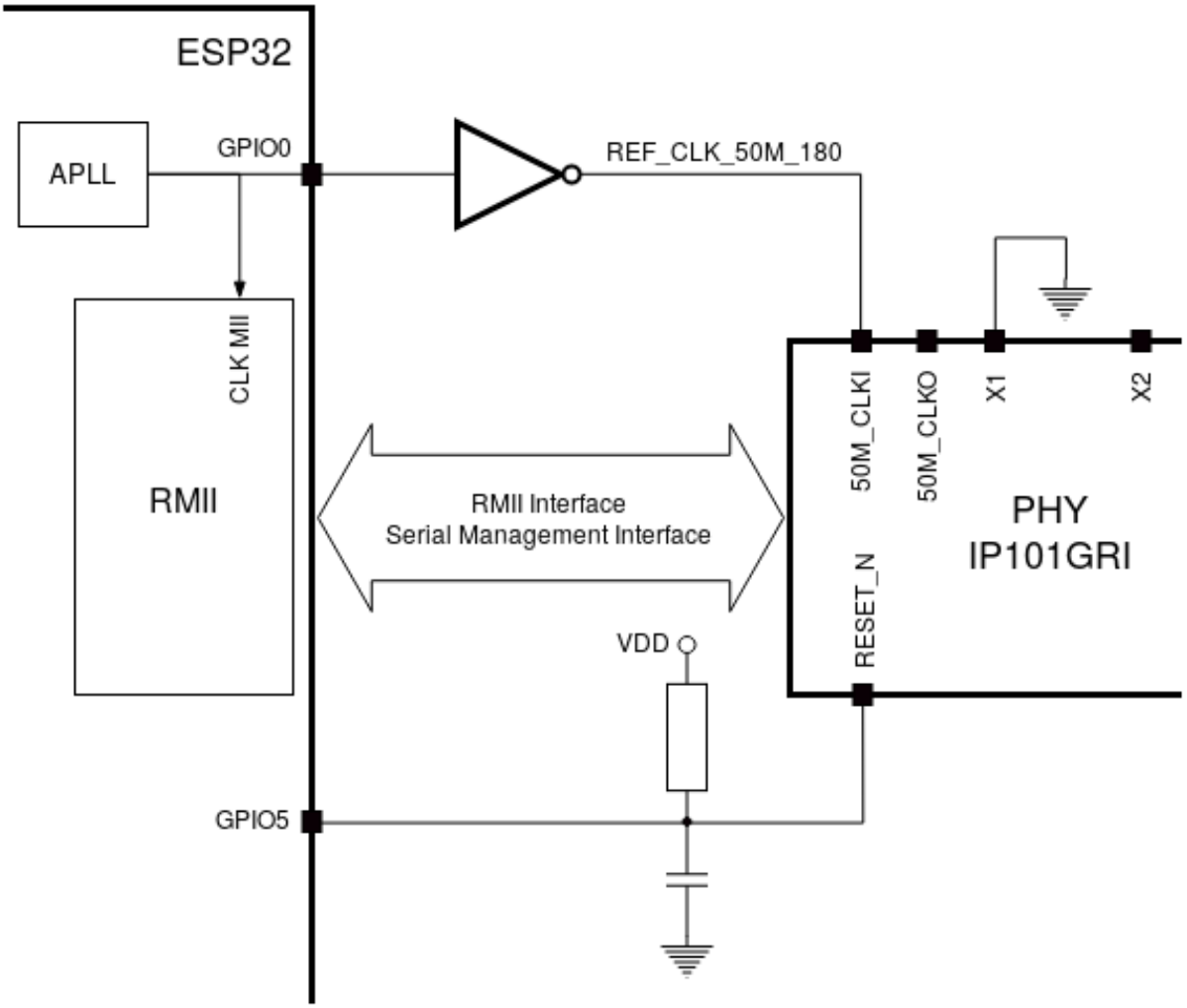

Fig. 27: RMII Clock from ESP Internal APLL

GPIO Allocation

This section describes allocation of ESP32 GPIOs to specific interfaces or functions of the ESP32-Ethernet-Kit.

IP101GRI (PHY) Interface The allocation of the ESP32 (MAC) pins to IP101GRI (PHY) is shown in the table below. Implementation of ESP32-Ethernet-Kit defaults to Reduced Media-Independent Interface (RMII).

No.	ESP32 Pin (MAC)	IP101GRI (PHY)
RMII Interface		
1	GPIO21	TX_EN
2	GPIO19	TXD[0]
3	GPIO22	TXD[1]
4	GPIO25	RXD[0]
5	GPIO26	RXD[1]
6	GPIO27	CRS_DV
7	GPIO0	REF_CLK
Serial Management Interface		
8	GPIO23	MDC
9	GPIO18	MDIO
PHY Reset		
10	GPIO5	Reset_N

Note: The allocation of all pins under the ESP32 ' s *RMII Interface* is fixed and cannot be changed either through IO MUX or GPIO Matrix. REF_CLK can only be selected from GPIO0, GPIO16 or GPIO17 and it can not be changed through GPIO Matrix.

GPIO Header 1 This header exposes some GPIOs that are not used elsewhere on the ESP32-Ethernet-Kit.

No.	ESP32 Pin
1	GPIO32
2	GPIO33
3	GPIO34
4	GPIO35
5	GPIO36
6	GPIO39

GPIO Header 2 This header contains GPIOs that may be used for other purposes depending on scenarios described in column "Comments".

No.	ESP32 Pin	Comments
1	GPIO17	See note 1
2	GPIO16	See note 1
3	GPIO4	
4	GPIO2	
5	GPIO13	See note 2
6	GPIO12	See note 2
7	GPIO15	See note 2
8	GPIO14	See note 2
9	GND	Ground
10	3V3	3.3 V power supply

Note:

1. The ESP32 pins GPIO16 and GPIO17 are not broken out to the ESP32-WROVER-E module and therefore not available for use. If you need to use these pins, please solder a module without PSRAM memory inside, e.g. the ESP32-WROOM-32D or ESP32-SOLO-1.
2. Functionality depends on the settings of the *Function Switch*.

GPIO Allocation Summary

ESP32-WROVER-E	IP101GRI	UART	JTAG	GPIO	Comments
S_VP				IO36	
S_VN				IO39	
IO34				IO34	
IO35				IO35	
IO32				IO32	
IO33				IO33	
IO25	RXD[0]				
IO26	RXD[1]				
IO27	CRS_DV				
IO14			TMS	IO14	
IO12			TDI	IO12	
IO13			TCK	IO13	
IO15			TDO	IO15	
IO2				IO2	
IO0	REF_CLK				See note 1
IO4				IO4	
IO16				IO16 (NC)	See note 2
IO17				IO17 (NC)	See note 2
IO5	Reset_N				See note 1
IO18	MDIO				
IO19	TXD[0]				
IO21	TX_EN				
RXD0		RXD			
TXD0		TXD			
IO22	TXD[1]				
IO23	MDC				

Note:

1. To prevent the power-on state of the GPIO0 from being affected by the clock output on the PHY side, the RESET_N signal to PHY defaults to low, turning the clock output off. After power-on you can control RESET_N with GPIO5 to turn the clock output on. See also *RMII Clock Sourced Externally by PHY*. For PHYs that cannot turn off the clock output through RESET_N, it is recommended to use a crystal module that can be disabled/enabled externally. Similarly like when using RESET_N, the oscillator module should be disabled by default and turned on by ESP32 after power-up. For a reference design please see ESP32-Ethernet-Kit V1.2 Ethernet board (A) schematic.
2. The ESP32 pins GPIO16 and GPIO17 are not broken out to the ESP32-WROVER-E module and therefore not available for use. If you need to use these pins, please solder a module without PSRAM memory inside, e.g. the ESP32-WROOM-32D or ESP32-SOLO-1.

Start Application Development

Before powering up your ESP32-Ethernet-Kit, please make sure that the board is in good condition with no obvious signs of damage.

Initial Setup

1. Set the **Function Switch** on the *Ethernet board (A)* to its default position by turning all the switches to **ON**.
2. To simplify flashing and testing of the application, do not input extra signals to the board headers.
3. The *PoE board (B)* can now be plugged in, but do not connect external power to it.
4. Connect the *Ethernet board (A)* to the PC with a USB cable.
5. Turn the **Power Switch** from GND to 5V0 position, the **5V Power On LED** should light up.

Now to Development Proceed to *Get Started*, where Section *Installation Step by Step* will quickly help you set up the development environment and then flash an example project onto your board.

Move on to the next section only if you have successfully completed all the above steps.

Configure and Load the Ethernet Example After setting up the development environment and testing the board, you can configure and flash the ethernet/basic example. This example has been created for testing Ethernet functionality. It supports different PHY, including **IP101GRI** installed on *ESP32-Ethernet-Kit V1.2 (click to enlarge)*.

Summary of Changes from ESP32-Ethernet-Kit V1.1

- Correct the placement of GPIO pin number marking on the board' s silkscreen besides the DIP switch.
- Values of C1, C2, C42, and C43 are updated to 20 pF. For more information, please check ESP32-Ethernet-Kit V1.2 Ethernet board (A) schematic.
- Replace ESP32-WROVER-B with ESP32-WROVER-E.

Other Versions of ESP32-Ethernet-Kit

- *ESP32-Ethernet-Kit V1.0 Getting Started Guide*
- *ESP32-Ethernet-Kit V1.1 Getting Started Guide*

Related Documents

- ESP32-Ethernet-Kit V1.2 Ethernet Board (A) Schematic (PDF)
- ESP32-Ethernet-Kit PoE Board (B) Schematic (PDF)
- ESP32-Ethernet-Kit V1.2 Ethernet Board (A) PCB Layout (PDF)
- ESP32-Ethernet-Kit PoE Board (B) PCB Layout (PDF)
- ESP32 Datasheet (PDF)
- ESP32-WROVER-E Datasheet (PDF)
- *JTAG Debugging*
- *ESP32 Hardware Reference*

For other design documentation for the board, please contact us at sales@espressif.com.

ESP32-Ethernet-Kit V1.0 Getting Started Guide

This guide shows how to get started with the ESP32-Ethernet-Kit development board and also provides information about its functionality and configuration options.

The *ESP32-Ethernet-Kit* is an Ethernet-to-Wi-Fi development board that enables Ethernet devices to be interconnected over Wi-Fi. At the same time, to provide more flexible power supply options, the ESP32-Ethernet-Kit also supports power over Ethernet (PoE).

What You Need

- *ESP32-Ethernet-Kit V1.0 board*
- USB 2.0 A to Micro B Cable
- Computer running Windows, Linux, or macOS

You can skip the introduction sections and go directly to Section *Start Application Development*.

Overview ESP32-Ethernet-Kit is an ESP32-based development board produced by Espressif.

It consists of two development boards, the Ethernet board A and the PoE board B, The *Ethernet board (A)* contains Bluetooth / Wi-Fi dual-mode ESP32-WROVER-B module and IP101GRI, a Single Port 10/100 Fast Ethernet Transceiver (PHY). The *PoE board (B)* provides power over Ethernet functionality. The A board can work independently, without the board B installed.

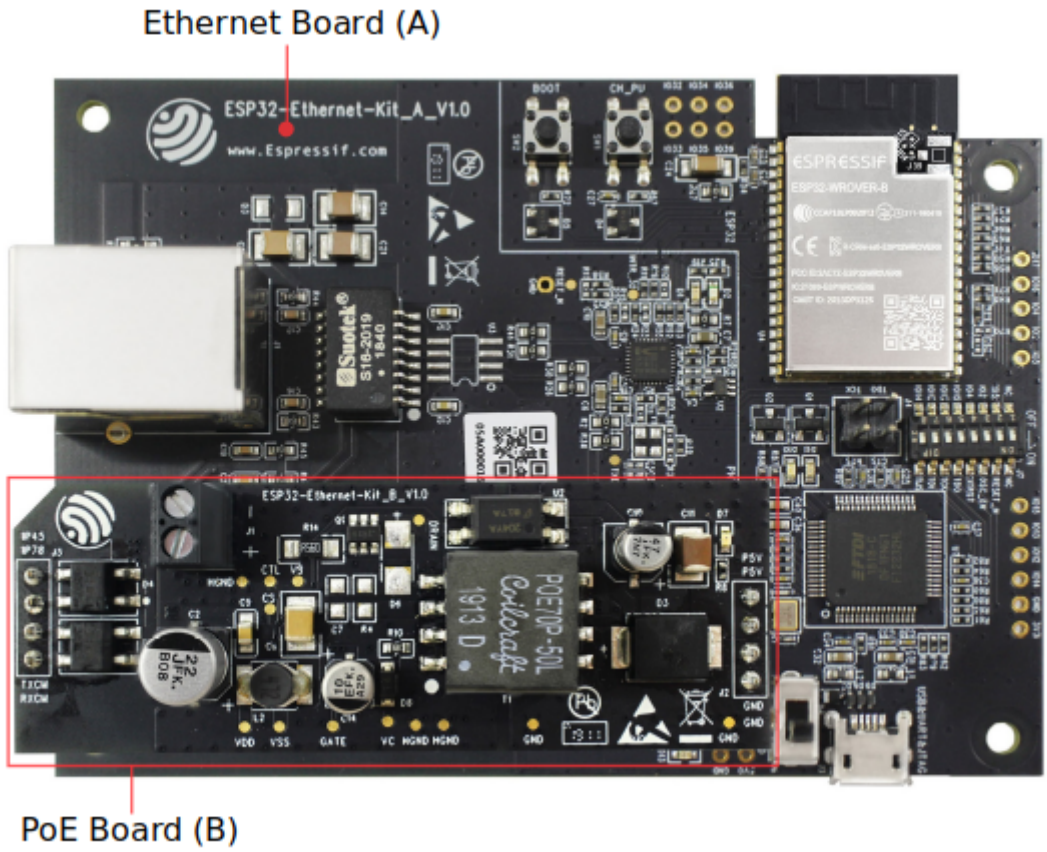

Fig. 28: ESP32-Ethernet-Kit V1.0

For the application loading and monitoring the Ethernet board (A) also features FTDI FT2232H chip - an advanced multi-interface USB bridge. This chip enables to use JTAG for direct debugging of ESP32 through the USB interface without a separate JTAG debugger.

Functionality Overview The block diagram below shows the main components of ESP32-Ethernet-Kit and their interconnections.

Functional Description The following two figures and tables describe the key components, interfaces, and controls of the ESP32-Ethernet-Kit.

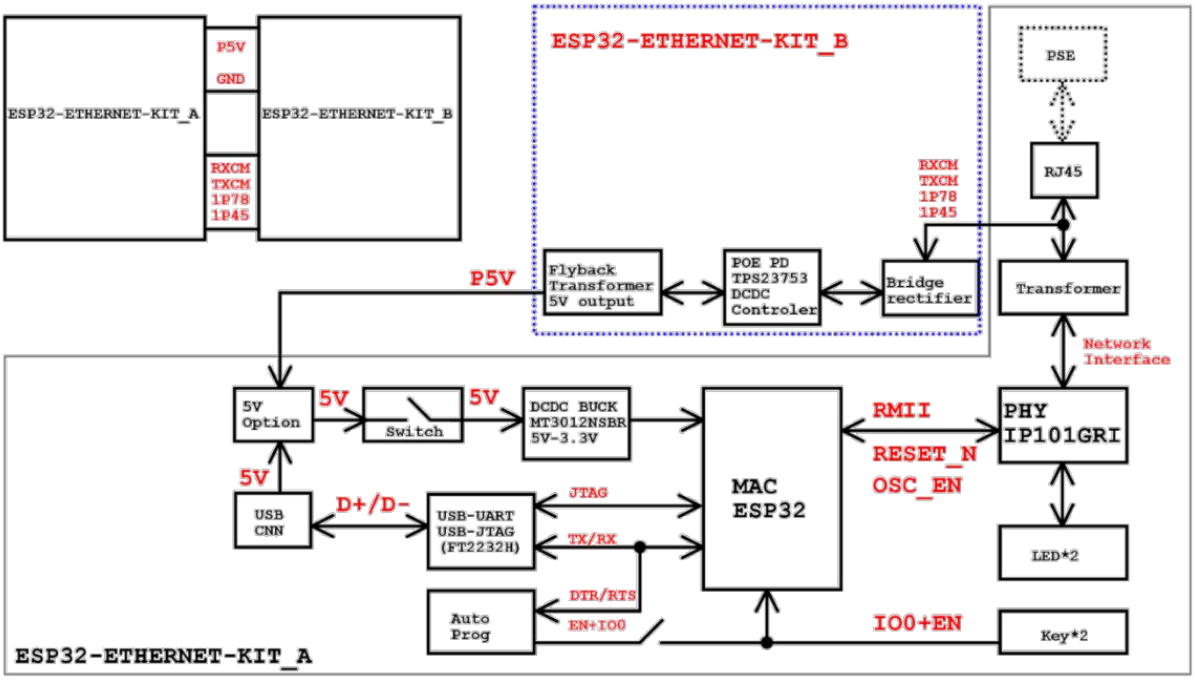

Fig. 29: ESP32-Ethernet-Kit block diagram (click to enlarge)

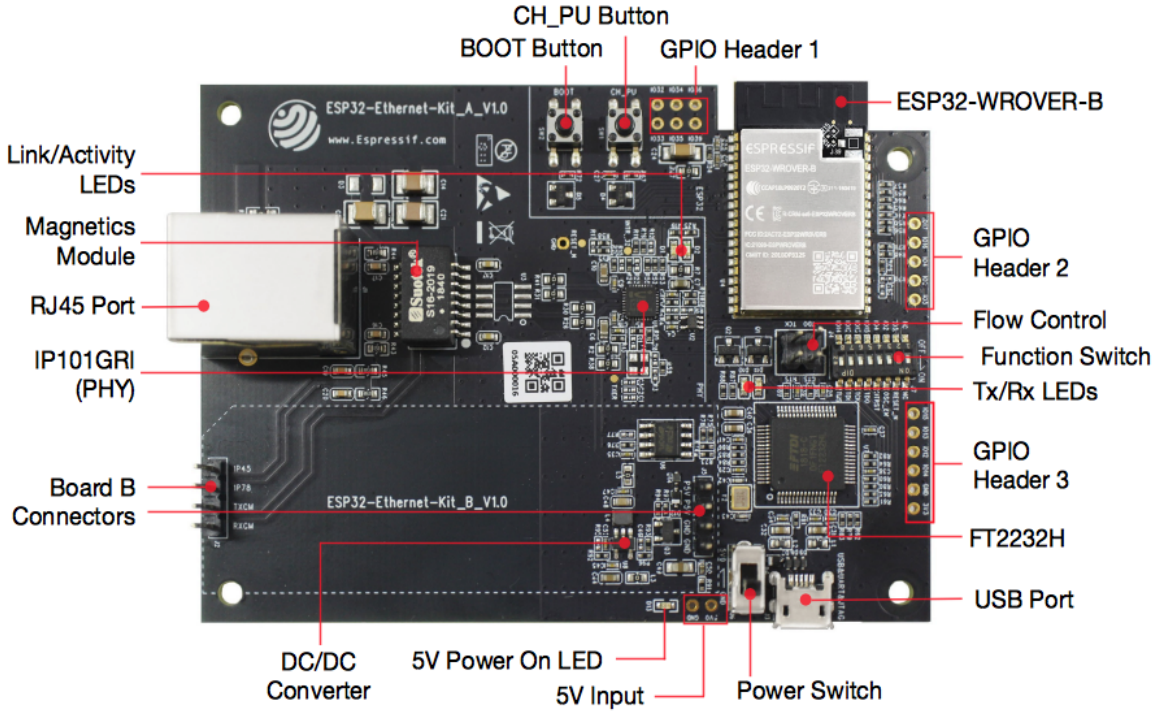

Fig. 30: ESP32-Ethernet-Kit - Ethernet board (A) layout (click to enlarge)

Ethernet Board (A) The table below provides description starting from the picture’ s top right corner and going clockwise.

Key Component	Description
ESP32-WROVER-B	This ESP32 module features 64-Mbit PSRAM for flexible extended storage and data processing capabilities.
GPIO Header 2	Five unpopulated through-hole solder pads to provide access to selected GPIOs of ESP32. For details, see *GPIO Header 2*.
Flow Control	A jumper header with access to the board signals. For details, see *Flow Control*.
Function Switch	A DIP switch used to configure the functionality of selected GPIOs of ESP32. For details, see *Function Switch*.
Tx/Rx LEDs	Two LEDs to show the status of UART transmission.
GPIO Header 3	Provides access to some GPIOs of ESP32 that can be used depending on the position of the *Function Switch*.
FT2232H	The FT2232H chip serves as a multi-protocol USB-to-serial bridge which can be programmed and controlled via USB to provide communication with ESP32. FT2232H also features USB-to-JTAG interface which is available on channel A of the chip, while USB-to-serial is on channel B. The FT2232H chip enhances user-friendliness in terms of application development and debugging. See ESP32-Ethernet-Kit V1.0 Ethernet board (A) schematic.
USB Port	USB interface. Power supply for the board as well as the communication interface between a computer and the board.
Power Switch	Power On/Off Switch. Toggling toward the **Boot** button powers the board on, toggling away from **Boot** powers the board off.
5V Input	The 5V power supply interface can be more convenient when the board is operating autonomously (not connected to a computer).
5V Power On LED	This red LED turns on when power is supplied to the board, either from USB or 5V Input.
DC/DC Converter	Provided DC 5 V to 3.3 V conversion, output current up to 2A.
Board B Connectors	A pair male header pins for mounting the *PoE board (B)*.
IP101GRI (PHY)	The physical layer (PHY) connection to the Ethernet cable is implemented using the IP101GRI chip. The connection between PHY and ESP32 is done through the reduced media-independent interface (RMII), a variant of the media-independent interface (MII) standard. The PHY supports the IEEE 802.3 / 802.3u standard of 10/100Mbps.
RJ45 Port	Ethernet network data transmission port.
Magnetics Module	The Magnetics are part of the Ethernet specification to protect against faults and transients, including rejection of common mode signals between the transceiver IC and the cable. The magnetics also provide galvanic isolation between the transceiver and the Ethernet device.
Link/Activity LEDs	Two LEDs (green and red) that respectively indicate the "Link" and "Activity" statuses of the PHY.
BOOT Button	Download button. Holding down **BOOT** and then pressing **CH_PU** initiates Firmware Download mode for downloading firmware through the serial port.
CH_PU Button	Reset button.

PoE Board (B) This board coverts power delivered over the Ethernet cable (PoE) to provide a power supply for the Ethernet board (A). The main components of the PoE board (B) are shown on the block diagram under *Functionality Overview*.

The PoE board (B) has the following features:

- Support for IEEE 802.3at
- Power output: 5 V, 1.4 A

To take advantage of the PoE functionality the **RJ45 Port** of the Ethernet board (A) should be connected with an Ethernet cable to a switch that supports PoE. When the Ethernet board (A) detects 5 V power output from the PoE board (B), the USB power will be automatically cut off.

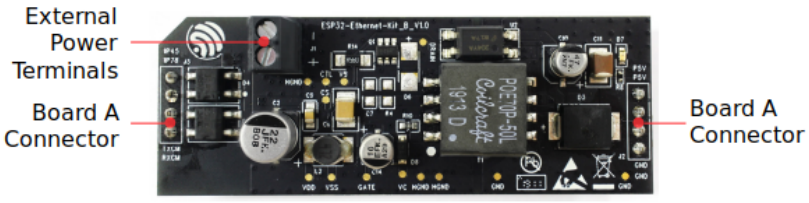

Fig. 31: ESP32-Ethernet-Kit - PoE board (B) layout (click to enlarge)

Key Component	Description
Board A Connector	Four female header pins for mounting this board onto *Ethernet board (A)*.
External Power Terminals	Optional power supply to the PoE board (B).

Setup Options This section describes options to configure the ESP32-Ethernet-Kit hardware.

Function Switch The functions for specific GPIO pins can be selected with the Function Switch.

DIP SW	GPIO Pin	Pin Functionality if DIP SW is ON
1	GPIO14	Connected to FT2232H to provide JTAG functionality
2	GPIO12	Connected to FT2232H to provide JTAG functionality
3	GPIO13	Connected to FT2232H to provide JTAG functionality
4	GPIO15	Connected to FT2232H to provide JTAG functionality
5	GPIO4	Connected to FT2232H to provide JTAG functionality
6	GPIO2	Connected to on-board 25 MHz oscillator
7	GPIO5	Connected to RESET_N input of IP101GRI
8	n/a	

You can make a certain GPIO pin available for other purposes by putting its DIP SW to the Off position.

Flow Control This is a 2 x 2 jumper pin header intended for the UART flow control.

.	Signal	Comment
1	MTDO	GPIO13, see also *Function Switch*
2	MTCK	GPIO15, see also *Function Switch*
3	RTS	RTS signal of FT2232H
4	CTS	CTS signal of FT2232H

GPIO Allocation This section describes allocation of ESP32 GPIOs to specific interfaces or functions of the ESP32-Ethernet-Kit.

IP101GRI (PHY) Interface The allocation of the ESP32 (MAC) pins to IP101GRI (PHY) is shown in the table below. Implementation of ESP32-Ethernet-Kit defaults to Reduced Media-Independent Interface (RMII).

.	ESP32 Pin (MAC)	IP101GRI (PHY)
RMII Interface		
1	GPIO21	TX_EN
2	GPIO19	TXD[0]
3	GPIO22	TXD[1]
4	GPIO25	RXD[0]
5	GPIO26	RXD[1]
6	GPIO27	CRS_DV
7	GPIO0	REF_CLK
Serial Management Interface		
8	GPIO23	MDC
9	GPIO18	MDIO
PHY Reset		
10	GPIO5	Reset_N

Note: Except for REF_CLK, the allocation of all pins under the *RMII Interface* is fixed and cannot be changed either through IOMUX or GPIO Matrix.

GPIO Header 1 This header exposes some GPIOs that are not used elsewhere on the ESP32-Ethernet-Kit.

.	ESP32 Pin
1	GPIO32
2	GPIO33
3	GPIO34
4	GPIO35
5	GPIO36
6	GPIO39

GPIO Header 2 This header contains the GPIOs with specific MII functionality (except GPIO2), as opposed to Reduced Media-Independent Interface (RMII) functionality implemented on ESP32-Ethernet-Kit board by default, see *IP101GRI (PHY) Interface*. Depending on the situation, if MMI is used, specific Ethernet applications might require this functionality.

.	ESP32 Pin	MII Function	Comments
1	GPIO17	EMAC_CLK_180	See note 1
2	GPIO16	EMAC_CLK_OUT	See note 1
3	GPIO4	EMAC_TX_ER	
4	GPIO2	n/a	See note 2
5	GPIO5	EMAC_RX_CLK	See note 2

Note:

1. The ESP32 pins GPIO16 and GPIO17 are not broken out to the ESP32-WROVER-B module and therefore not available for use. If you need to use these pins, please solder a module without SPIRAM memory inside, e.g. the ESP32-WROOM-32D or ESP32-SOLO-1.
2. Functionality depends on the settings of the *Function Switch*.

GPIO Header 3 The functionality of GPIOs connected to this header depends on the settings of the *Function Switch*.

.	ESP32 Pin
1	GPIO15
2	GPIO13
3	GPIO12
4	GPIO14
5	GND
6	3V3

GPIO Allocation Summary

ESP32-WROVER-B	IP101GRI	UART	JTAG	GPIO	Comments
S_VP				IO36	
S_VN				IO39	
IO34				IO34	
IO35				IO35	
IO32				IO32	
IO33				IO33	
IO25	RXD[0]				
IO26	RXD[1]				
IO27	CRS_DV				
IO14			TMS	IO14	
IO12			TDI	IO12	
IO13		RTS	TCK	IO13	
IO15		CTS	TDO	IO15	
IO2				IO2	See notes 1 and 3 below
IO0	REF_CLK				See notes 2 and 3 below
IO4			nTRST	IO4	
IO16				IO16 (NC)	See note 4 below
IO17				IO17 (NC)	See note 4 below
IO5	Reset_N			IO5	
IO18	MDIO				
IO19	TXD[0]				
IO21	TX_EN				
RXD0		RXD			
TXD0		TXD			
IO22	TXD[1]				
IO23	MDC				

Note:

1. GPIO2 is used to enable external oscillator of the PHY.
2. GPIO0 is a source of 50 MHz reference clock for the PHY. The clock signal is first inverted, to account for transmission line delay, and then supplied to the PHY.
3. To prevent affecting the power-on state of GPIO0 by the clock output on the PHY side, the PHY external oscillator is enabled using GPIO2 after ESP32 is powered up.
4. The ESP32 pins GPIO16 and GPIO17 are not broken out to the ESP32-WROVER-B module and therefore not available for use. If you need to use these pins, please solder a module without SPIRAM memory inside, e.g. the ESP32-WROOM-32D or ESP32-SOLO-1.

Start Application Development Before powering up your ESP32-Ethernet-Kit, please make sure that the board is in good condition with no obvious signs of damage.

Initial Setup

1. Set the **Function Switch** on the *Ethernet board (A)* to its default position by turning all the switches to **ON**.
2. To simplify flashing and testing the application, do not install any jumpers and do not connect any signals to the board headers.
3. The *PoE board (B)* can now be plugged in, but do not connect external power to it.
4. Connect the *Ethernet board (A)* to the PC with a USB cable.
5. Turn the **Power Switch** from GND to 5V0 position, the **5V Power On LED** should light up.

Now to Development Proceed to *Get Started*, where Section *Installation Step by Step* will quickly help you set up the development environment and then flash an example project onto your board.

Move on to the next section only if you have successfully completed all the above steps.

Configure and Load the Ethernet Example After setting up the development environment and testing the board, you can configure and flash the ethernet/basic example. This example has been created for testing Ethernet functionality. It supports different PHY, including **IP101GRI** installed on *ESP32-Ethernet-Kit V1.0 board*.

Related Documents

- ESP32-Ethernet-Kit V1.0 Ethernet board (A) schematic (PDF)
- ESP32-Ethernet-Kit V1.0 PoE board (B) schematic (PDF)
- ESP32 Datasheet (PDF)
- ESP32-WROVER-B Datasheet (PDF)
- *JTAG Debugging*
- *ESP32 Hardware Reference*

For other design documentation for the board, please contact us at sales@espressif.com.

ESP32-Ethernet-Kit V1.1 Getting Started Guide

This guide shows how to get started with the ESP32-Ethernet-Kit development board and also provides information about its functionality and configuration options.

The *ESP32-Ethernet-Kit* is an Ethernet-to-Wi-Fi development board that enables Ethernet devices to be interconnected over Wi-Fi. At the same time, to provide more flexible power supply options, the ESP32-Ethernet-Kit also supports power over Ethernet (PoE).

What You Need

- *ESP32-Ethernet-Kit V1.1 board*
- USB 2.0 A to Micro B Cable
- Computer running Windows, Linux, or macOS

You can skip the introduction sections and go directly to Section *Start Application Development*.

Overview ESP32-Ethernet-Kit is an ESP32-based development board produced by Espressif.

It consists of two development boards, the Ethernet board A and the PoE board B. The *Ethernet board (A)* contains Bluetooth / Wi-Fi dual-mode ESP32-WROVER-B module and IP101GRI, a Single Port 10/100 Fast Ethernet Transceiver (PHY). The *PoE board (B)* provides power over Ethernet functionality. The A board can work independently, without the board B installed.

For the application loading and monitoring, the Ethernet board (A) also features FTDI FT2232H chip - an advanced multi-interface USB bridge. This chip enables to use JTAG for direct debugging of ESP32 through the USB interface without a separate JTAG debugger.

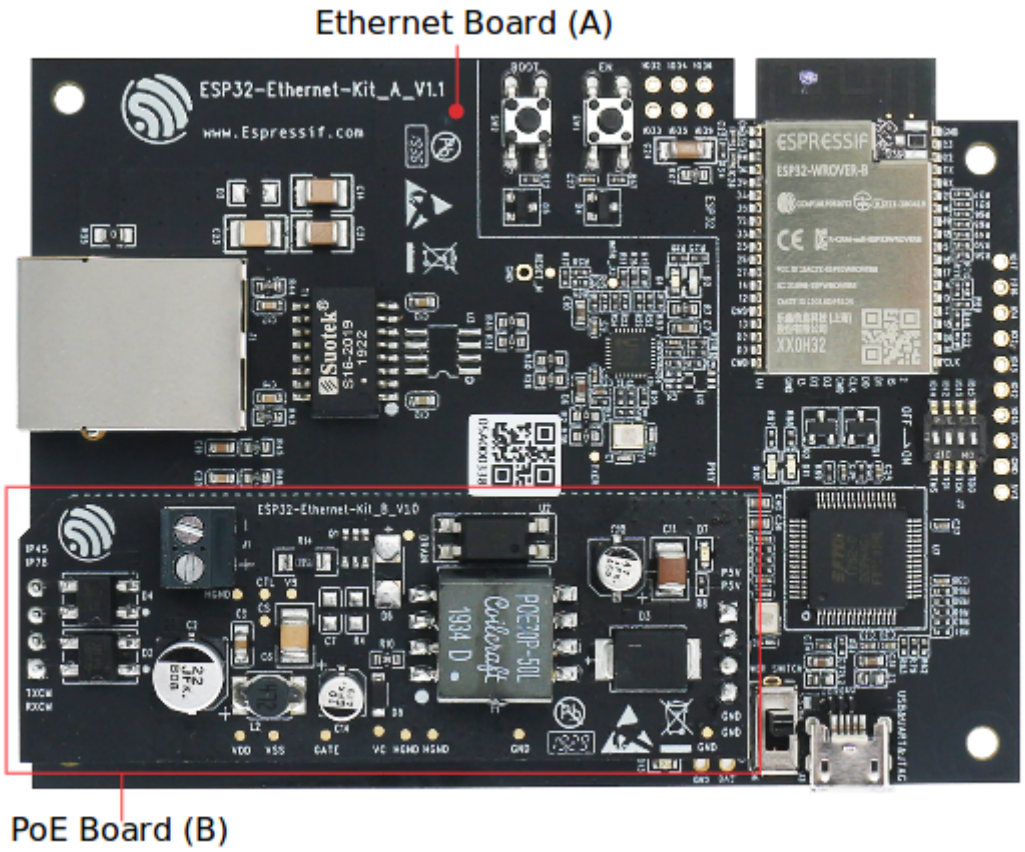

Fig. 32: ESP32-Ethernet-Kit V1.1

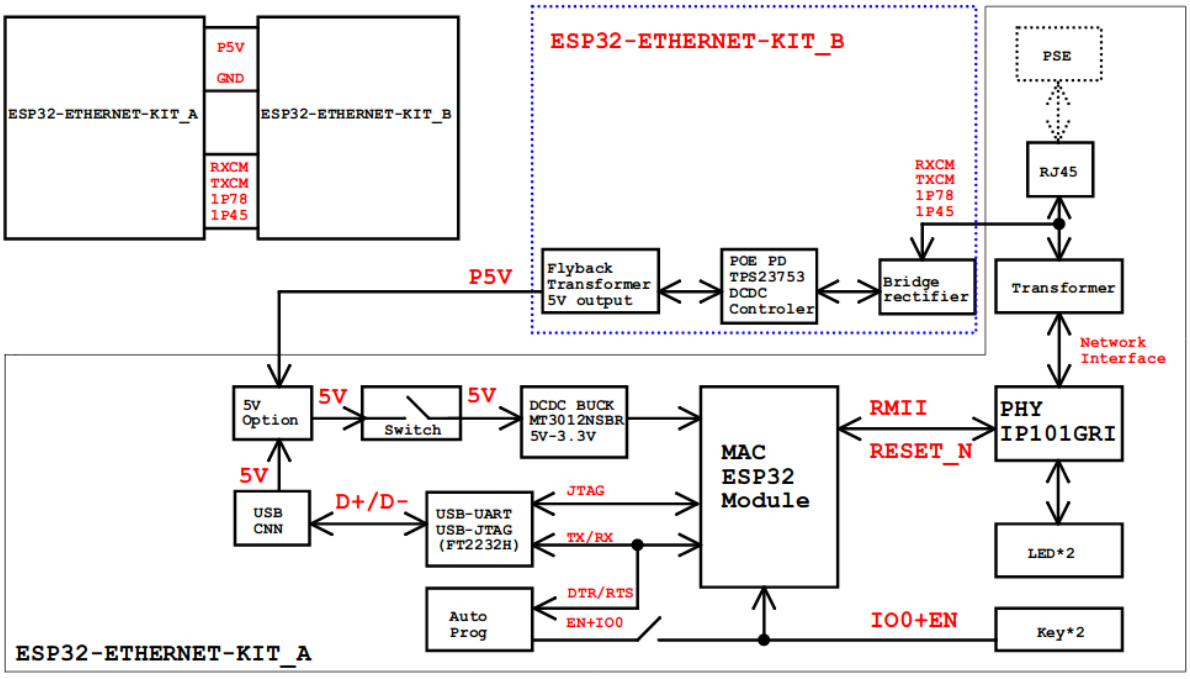

Fig. 33: ESP32-Ethernet-Kit block diagram (click to enlarge)

Functionality Overview The block diagram below shows the main components of ESP32-Ethernet-Kit and their interconnections.

Functional Description The following figures and tables describe the key components, interfaces, and controls of the ESP32-Ethernet-Kit.

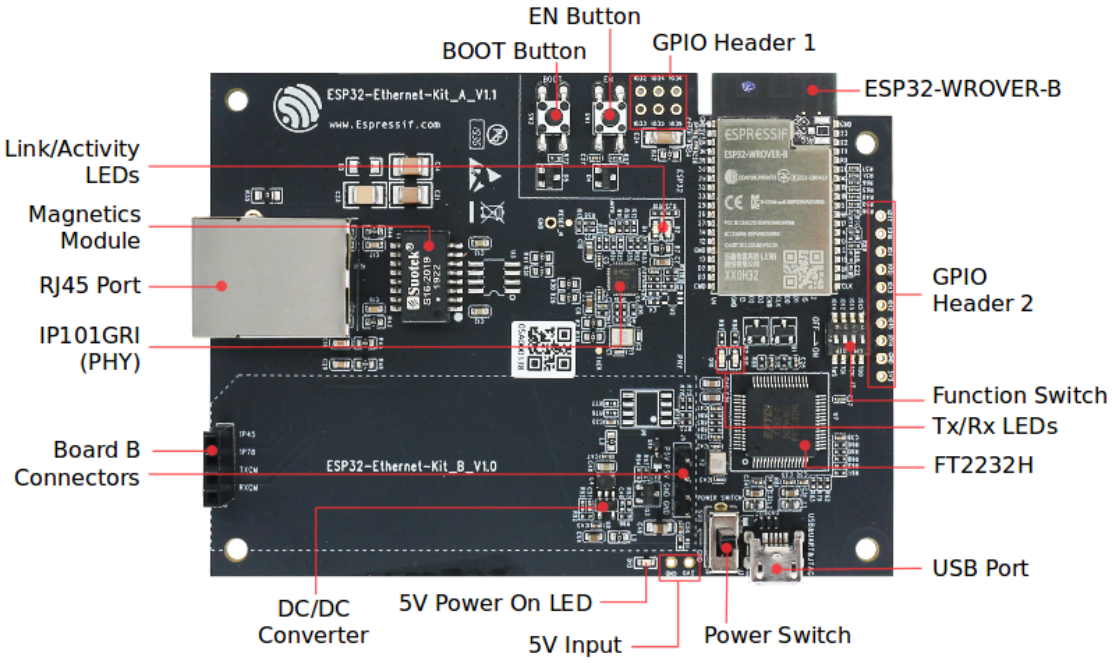

Fig. 34: ESP32-Ethernet-Kit - Ethernet board (A) layout (click to enlarge)

Ethernet Board (A) The table below provides description starting from the picture's top right corner and going clockwise.

Key Component	Description
ESP32-WROVER-B	This ESP32 module features 64-Mbit PSRAM for flexible extended storage and data processing capabilities.
GPIO Header 2	Five unpopulated through-hole solder pads to provide access to selected GPIOs of ESP32. For details, see *GPIO Header 2*.
Function Switch	A 4-bit DIP switch used to configure the functionality of selected GPIOs of ESP32. Please note that placement of GPIO pin number marking on the board's silkscreen besides the DIP switch is incorrect. For details and correct pin allocation see *Function Switch*.
Tx/Rx LEDs	Two LEDs to show the status of UART transmission.
FT2232H	The FT2232H chip serves as a multi-protocol USB-to-serial bridge which can be programmed and controlled via USB to provide communication with ESP32. FT2232H also features USB-to-JTAG interface which is available on channel A of the chip, while USB-to-serial is on channel B. The FT2232H chip enhances user-friendliness in terms of application development and debugging. See ESP32-Ethernet-Kit V1.1 Ethernet board (A) schematic.
USB Port	USB interface. Power supply for the board as well as the communication interface between a computer and the board.
Power Switch	Power On/Off Switch. Toggling the switch to **5V0** position powers the board on, toggling to **GND** position powers the board off.
5V Input	The 5V power supply interface can be more convenient when the board is operating autonomously (not connected to a computer).
5V Power On LED	This red LED turns on when power is supplied to the board, either from USB or 5V Input.
DC/DC Converter	Provided DC 5 V to 3.3 V conversion, output current up to 2A.
Board B Connectors	A pair male and female header pins for mounting the *PoE board (B)*.
IP101GRI (PHY)	The physical layer (PHY) connection to the Ethernet cable is implemented using the IP101GRI chip. The connection between PHY and ESP32 is done through the reduced media-independent interface (RMII), a variant of the media-independent interface (MII) standard. The PHY supports the IEEE 802.3 / 802.3u standard of 10/100Mbps.
RJ45 Port	Ethernet network data transmission port.
Magnetics Module	The Magnetics are part of the Ethernet specification to protect against faults and transients, including rejection of common mode signals between the transceiver IC and the cable. The magnetics also provide galvanic isolation between the transceiver and the Ethernet device.
Link/Activity LEDs	Two LEDs (green and red) that respectively indicate the "Link" and "Activity" statuses of the PHY.
BOOT Button	Download button. Holding down **BOOT** and then pressing **EN** initiates Firmware Download mode for downloading firmware through the serial port.
EN Button	Reset button.
GPIO Header 1	This header provides six unpopulated through-hole solder pads connected to spare GPIOs of ESP32. For details, see *GPIO Header 1*.

PoE Board (B) This board coverts power delivered over the Ethernet cable (PoE) to provide a power supply for the Ethernet board (A). The main components of the PoE board (B) are shown on the block diagram under *Functionality Overview*.

The PoE board (B) has the following features:

- Support for IEEE 802.3at
- Power output: 5 V, 1.4 A

To take advantage of the PoE functionality the **RJ45 Port** of the Ethernet board (A) should be connected with an Ethernet cable to a switch that supports PoE. When the Ethernet board (A) detects 5 V power output from the PoE board (B), the USB power will be automatically cut off.

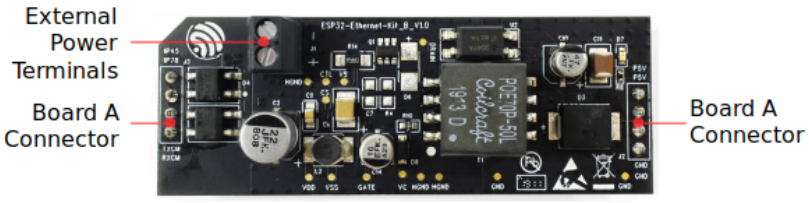

Fig. 35: ESP32-Ethernet-Kit - PoE board (B) layout (click to enlarge)

Table 2: Table PoE board (B)

Key Component	Description
Board A Connector	Four female (left) and four male (right) header pins for connecting the PoE board (B) to *Ethernet board (A)*. The pins on the left accept power coming from a PoE switch. The pins on the right deliver 5 V power supply to the Ethernet board (A).
External Power Terminals	Optional power supply (26.6 ~ 54 V) to the PoE board (B).

Setup Options This section describes options to configure the ESP32-Ethernet-Kit hardware.

Function Switch When in On position, this DIP switch is routing listed GPIOs to FT2232H to provide JTAG functionality. When in Off position, the GPIOs may be used for other purposes.

DIP SW	GPIO Pin
1	GPIO13
2	GPIO12
3	GPIO15
4	GPIO14

Note: Placement of GPIO pin number marking on the board' s silkscreen besides the DIP switch is incorrect. Please use instead the pin order as in the table above.

RMII Clock Selection The ethernet MAC and PHY under RMII working mode need a common 50 MHz reference clock (i.e. RMII clock) that can be provided either externally, or generated from internal ESP32 APLL.

Note: For additional information on the RMII clock selection, please refer to ESP32-Ethernet-Kit V1.1 Ethernet board (A) schematic, sheet 2, location D2.

RMII Clock Sourced Externally by PHY By default, the ESP32-Ethernet-Kit is configured to provide RMII clock for the IP101GRI PHY's 50M_CLKO output. The clock signal is generated by the frequency multiplication of 25 MHz crystal connected to the PHY. For details, please see the figure below.

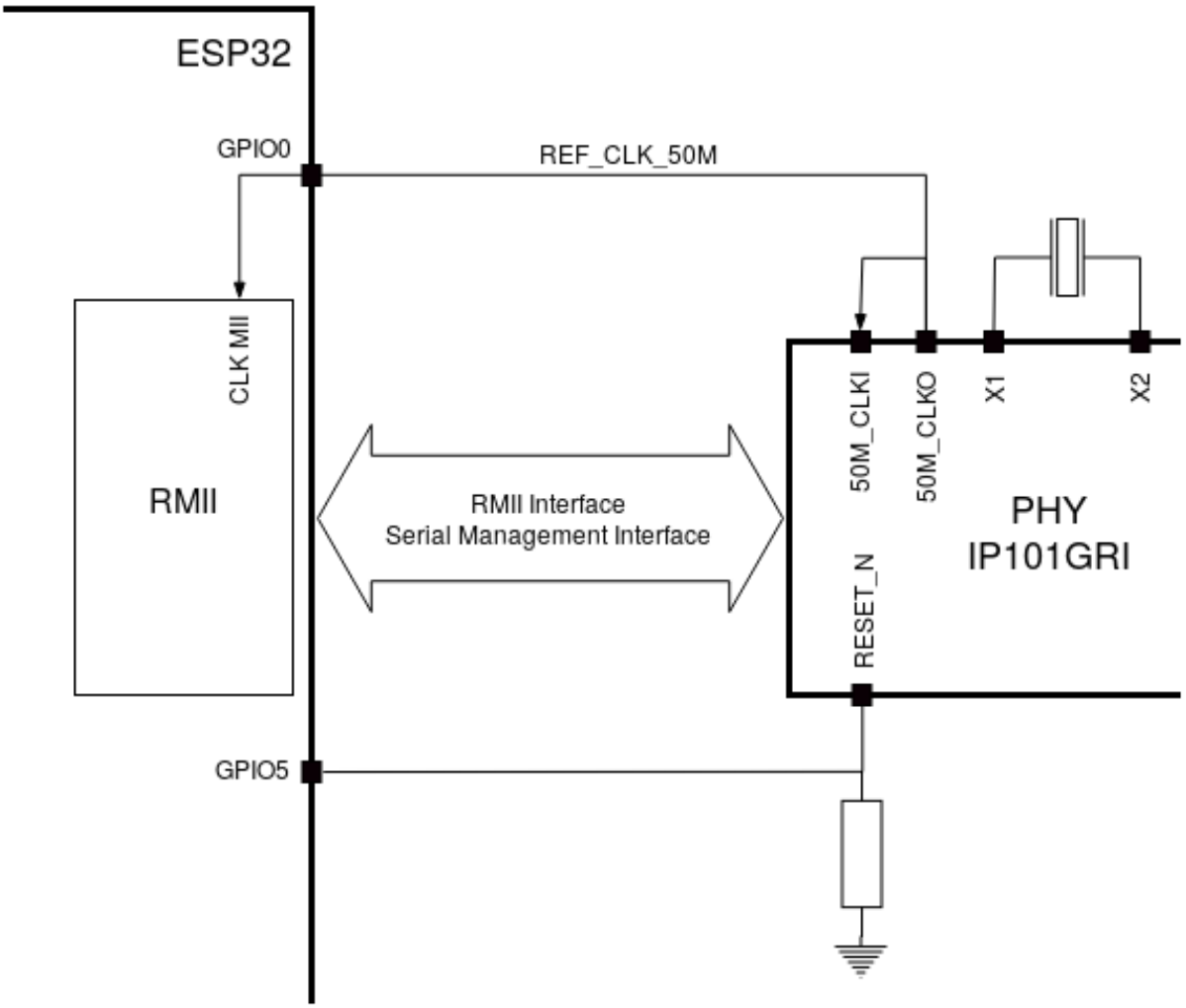

Fig. 36: RMII Clock from IP101GRI PHY

Please note that the PHY is reset on power up by pulling the RESET_N signal down with a resistor. ESP32 should assert RESET_N high with GPIO5 to enable PHY. Only this can ensure the power-up of system. Otherwise ESP32 may enter download mode (when the clock signal of REF_CLK_50M is at a high logic level during the GPIO0 power-up sampling phase).

RMII Clock Sourced Internally from ESP32's APLL Another option is to source the RMII Clock from internal ESP32 APLL, see figure below. The clock signal coming from GPIO0 is first inverted, to account for transmission line delay, and then supplied to the PHY.

To implement this option, users need to remove or add some RC components on the board. For details please refer to ESP32-Ethernet-Kit V1.1 Ethernet board (A) schematic, sheet 2, location D2. Please note that if the APLL is already used for other purposes (e.g. I2S peripheral), then you have no choice but use an external RMII clock.

GPIO Allocation This section describes allocation of ESP32 GPIOs to specific interfaces or functions of the ESP32-Ethernet-Kit.

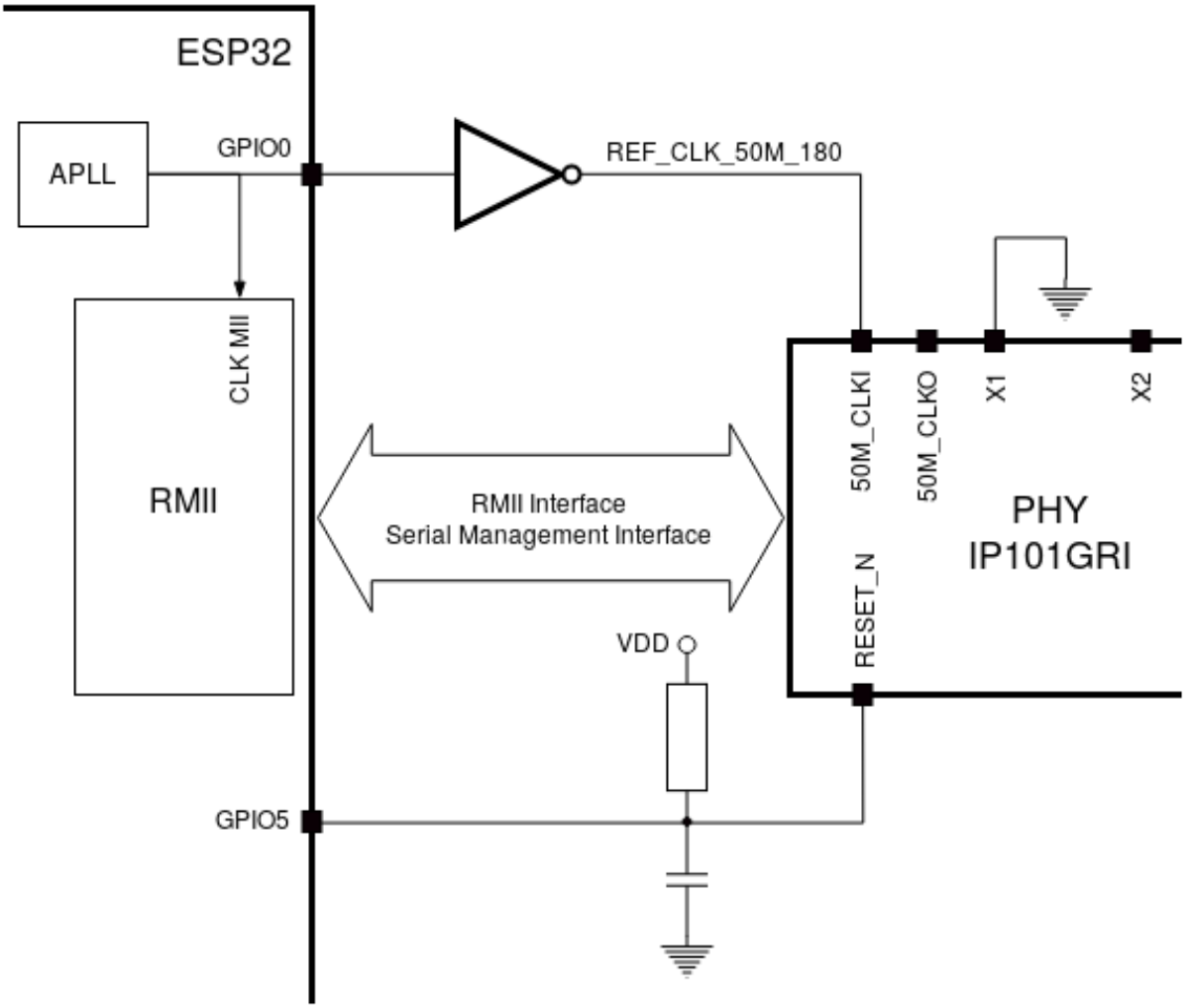

Fig. 37: RMII Clock from ESP Internal APLL

IP101GRI (PHY) Interface The allocation of the ESP32 (MAC) pins to IP101GRI (PHY) is shown in the table below. Implementation of ESP32-Ethernet-Kit defaults to Reduced Media-Independent Interface (RMII).

.	ESP32 Pin (MAC)	IP101GRI (PHY)
RMII Interface		
1	GPIO21	TX_EN
2	GPIO19	TXD[0]
3	GPIO22	TXD[1]
4	GPIO25	RXD[0]
5	GPIO26	RXD[1]
6	GPIO27	CRS_DV
7	GPIO0	REF_CLK
Serial Management Interface		
8	GPIO23	MDC
9	GPIO18	MDIO
PHY Reset		
10	GPIO5	Reset_N

Note: Except for REF_CLK, the allocation of all pins under the ESP32' s *RMII Interface* is fixed and cannot be changed either through IOMUX or GPIO Matrix.

GPIO Header 1 This header exposes some GPIOs that are not used elsewhere on the ESP32-Ethernet-Kit.

.	ESP32 Pin
1	GPIO32
2	GPIO33
3	GPIO34
4	GPIO35
5	GPIO36
6	GPIO39

GPIO Header 2 This header contains GPIOs that may be used for other purposes depending on scenarios described in column "Comments".

.	ESP32 Pin	Comments
1	GPIO17	See note 1
2	GPIO16	See note 1
3	GPIO4	
4	GPIO2	
5	GPIO13	See note 2
6	GPIO12	See note 2
7	GPIO15	See note 2
8	GPIO14	See note 2
9	GND	Ground
10	3V3	3.3 V power supply

Note:

1. The ESP32 pins GPIO16 and GPIO17 are not broken out to the ESP32-WROVER-B module and therefore not available for use. If you need to use these pins, please solder a module without PSRAM memory inside, e.g. the ESP32-WROOM-32D or ESP32-SOLO-1.
2. Functionality depends on the settings of the *Function Switch*.

GPIO Allocation Summary

ESP32-WROVER-B	IP101GRI	UART	JTAG	GPIO	Comments
S_VP				IO36	
S_VN				IO39	
IO34				IO34	
IO35				IO35	
IO32				IO32	
IO33				IO33	
IO25	RXD[0]				
IO26	RXD[1]				
IO27	CRS_DV				
IO14			TMS	IO14	
IO12			TDI	IO12	
IO13		RTS	TCK	IO13	
IO15		CTS	TDO	IO15	
IO2				IO2	
IO0	REF_CLK				See note 1
IO4				IO4	
IO16				IO16 (NC)	See note 2
IO17				IO17 (NC)	See note 2
IO5	Reset_N				See note 1
IO18	MDIO				
IO19	TXD[0]				
IO21	TX_EN				
RXD0		RXD			
TXD0		TXD			
IO22	TXD[1]				
IO23	MDC				

Note:

1. To prevent the power-on state of the GPIO0 from being affected by the clock output on the PHY side, the RESET_N signal to PHY defaults to low, turning the clock output off. After power-on you can control RESET_N with GPIO5 to turn the clock output on. See also *RMII Clock Sourced Externally by PHY*. For PHYs that cannot turn off the clock output through RESET_N, it is recommended to use a crystal module that can be disabled / enabled externally. Similarly like when using RESET_N, the oscillator module should be disabled by default and turned on by ESP32 after power-up. For a reference design please see ESP32-Ethernet-Kit V1.1 Ethernet board (A) schematic.
2. The ESP32 pins GPIO16 and GPIO17 are not broken out to the ESP32-WROVER-B module and therefore not available for use. If you need to use these pins, please solder a module without PSRAM memory inside, e.g. the ESP32-WROOM-32D or ESP32-SOLO-1.

Start Application Development Before powering up your ESP32-Ethernet-Kit, please make sure that the board is in good condition with no obvious signs of damage.

Initial Setup

1. Set the **Function Switch** on the *Ethernet board (A)* to its default position by turning all the switches to **ON**.
2. To simplify flashing and testing of the application, do not input extra signals to the board headers.
3. The *PoE board (B)* can now be plugged in, but do not connect external power to it.
4. Connect the *Ethernet board (A)* to the PC with a USB cable.

5. Turn the **Power Switch** from GND to 5V0 position, the **5V Power On LED** should light up.

Now to Development Proceed to *Get Started*, where Section *Installation Step by Step* will quickly help you set up the development environment and then flash an example project onto your board.

Move on to the next section only if you have successfully completed all the above steps.

Configure and Load the Ethernet Example After setting up the development environment and testing the board, you can configure and flash the ethernet/basic example. This example has been created for testing Ethernet functionality. It supports different PHY, including **IP101GRI** installed on *ESP32-Ethernet-Kit V1.1*.

Summary of Changes from ESP32-Ethernet-Kit V1.0

- The original inverted clock provided to the PHY by ESP32 using GPIO0 has been replaced by a clock generated on PHY side. The PHY's clock is connected to the ESP32 with same GPIO0. The GPIO2 which was originally used to control the active crystal oscillator on the PHY side, can now be used for other purposes.
- On power up, the ESP32 boot strapping pin GPIO0 may be affected by clock generated on the PHY side. To resolve this issue the PHY's Reset-N signal is pulled low using resistor R17 and effectively turning off the PHY's clock output. The Reset-N signal can be then pulled high by ESP32 using GPIO5.
- Removed FT2232H chip's external SPI Flash U6.
- Removed flow control jumper header J4.
- Removed nTRST JTAG signal. The corresponding GPIO4 can now be used for other purposes.
- Pull-up resistor R68 on the GPIO15 line is moved to the MTDO side of JTAG.
- To make the A and B board connections more foolproof (reduce chances of plugging in the B board in reverse orientation), the original two 4-pin male rows on board A were changed to one 4-pin female row and one 4-pin male row. Corresponding male and female 4-pins rows were installed on board B.

Other Versions of ESP32-Ethernet-Kit

- *ESP32-Ethernet-Kit V1.0 Getting Started Guide*

Related Documents

- ESP32-Ethernet-Kit V1.1 Ethernet board (A) schematic (PDF)
- ESP32-Ethernet-Kit V1.0 PoE board (B) schematic (PDF)
- ESP32 Datasheet (PDF)
- ESP32-WROVER-B Datasheet (PDF)
- *JTAG Debugging*
- *ESP32 Hardware Reference*

For other design documentation for the board, please contact us at sales@espressif.com.

1.3.5 ESP32-DevKitS(-R)

This user guide provides information on ESP32-DevKitS(-R), an ESP32-based flashing board produced by Espressif. ESP32-DevKitS(-R) is a combination of two board names: ESP32-DevKitS and ESP32-DevKitS-R. S stands for springs, and R stands for WROVER.

ESP32-DevKitS	ESP32-DevKitS-R

The document consists of the following major sections:

- *Getting Started*: Provides an overview of ESP32-DevKitS(-R) and hardware/software setup instructions to get started.
- *Hardware Reference*: Provides more detailed information about ESP32-DevKitS(-R)' s hardware.
- *Related Documents*: Gives links to related documentation.

Getting Started

This section describes how to get started with ESP32-DevKitS(-R). It begins with a few introductory sections about ESP32-DevKitS(-R), then Section *How to Flash a Board* provides instructions on how to mount a module onto ESP32-DevKitS(-R), get it ready, and flash firmware onto it.

Overview ESP32-DevKitS(-R) is Espressif' s flashing board designed specifically for ESP32. It can be used to flash an ESP32 module without soldering the module to the power supply and signal lines. With a module mounted, ESP32-DevKitS(-R) can also be used as a mini development board like ESP32-DevKitC.

ESP32-DevKitS and ESP32-DevKitS-R boards vary only in layout of spring pins to fit the following ESP32 modules.

- **ESP32-DevKitS:**
  - ESP32-WROOM-32
  - ESP32-WROOM-32D
  - ESP32-WROOM-32U
  - ESP32-SOLO-1
  - ESP32-WROOM-32E
  - ESP32-WROOM-32UE
- **ESP32-DevKitS-R:**
  - ESP32-WROVER (PCB & IPEX)
  - ESP32-WROVER-B (PCB & IPEX)
  - ESP32-WROVER-E
  - ESP32-WROVER-IE

For information about above modules, please refer to ESP32 Series Modules.

Description of Components

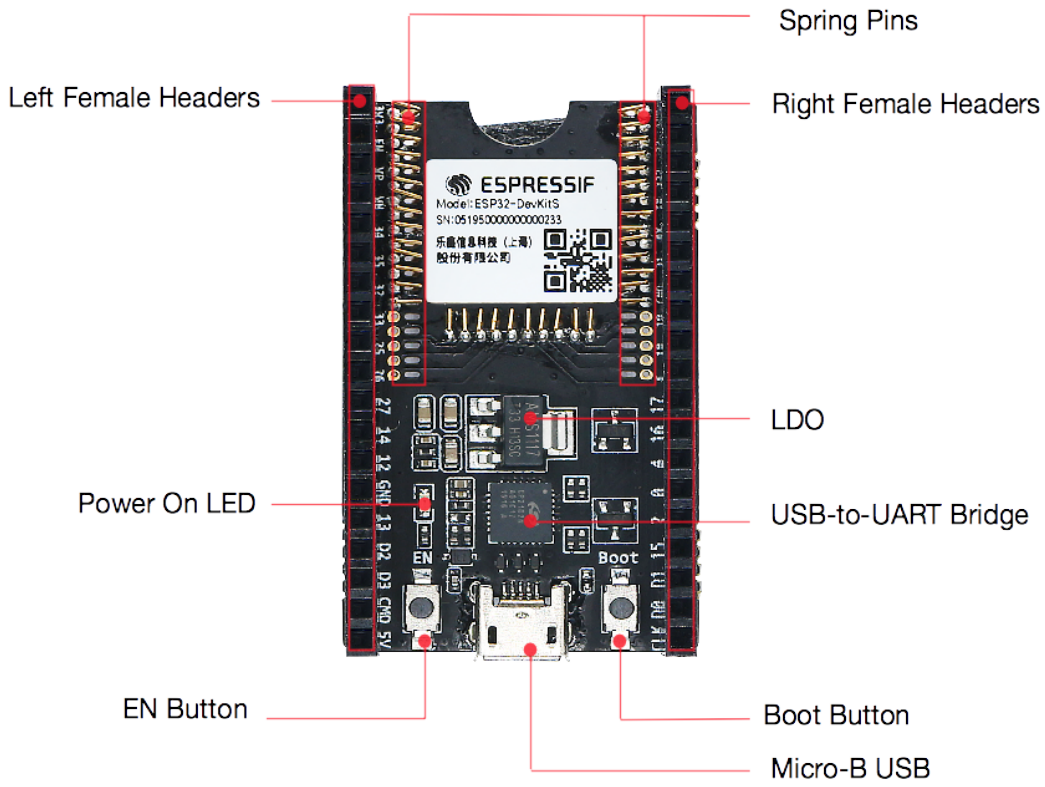

Fig. 38: ESP32-DevKitS - front

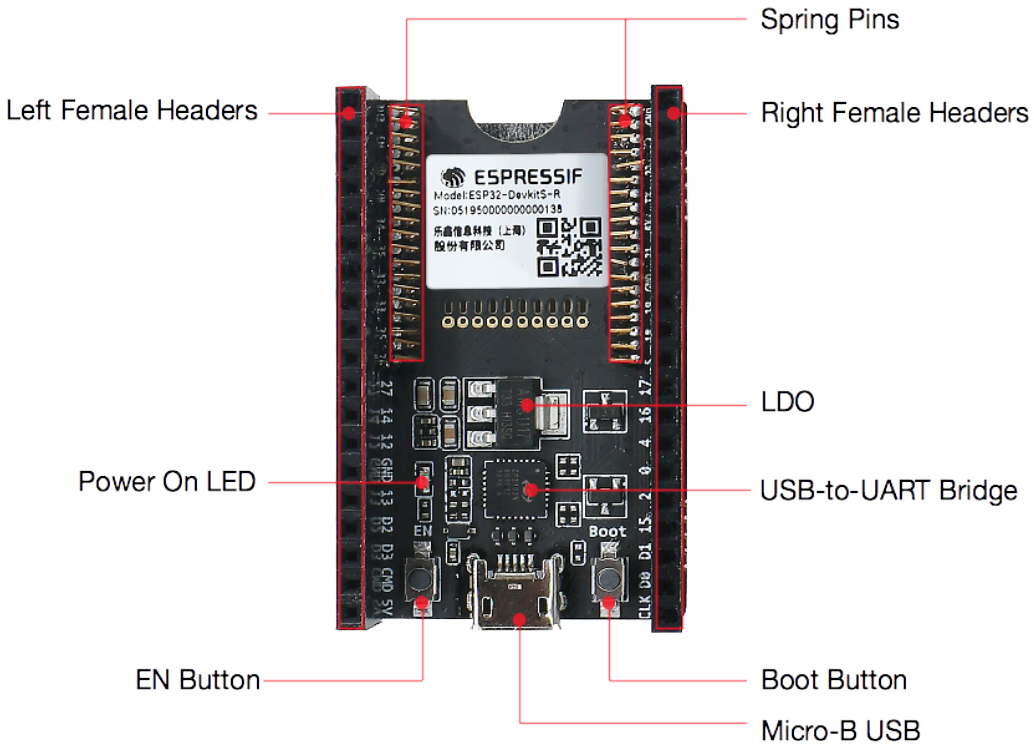

Fig. 39: ESP32-DevKitS-R - front

Key Component	Description
Spring Pins	Click the module in. The pins will fit into the module' s castellated holes.
2.54 mm Female Headers	These female headers are connected to pins of the module mounted on this board. For description of female headers, please refer to *Header Blocks*.
USB-to-UART Bridge	Single-chip USB to UART bridge provides transfer rates of up to 3 Mbps.
LDO	5V-to-3.3V low-dropout voltage regulator (LDO).
Micro-USB Connector/Micro USB Port	USB interface. Power supply for the board as well as the communication interface between a computer and the board.
EN Button	Reset button.
Boot Button	Download button. Holding down **Boot** and then pressing **EN** initiates Firmware Download mode for downloading firmware through the serial port.
Power On LED	Turns on when the USB or power supply is connected to the board.

How to Flash a Board Before powering up your ESP32-DevKitS(-R), please make sure that it is in good condition with no obvious signs of damage.

Required Hardware

- An ESP32 module of your choice
- USB 2.0 cable (Standard-A to Micro-B)
- Computer running Windows, Linux, or macOS

Hardware Setup Please mount a module of your choice onto your ESP32-DevKitS(-R) according to the following steps:

- Gently put your module on the ESP32-DevKitS(-R) board. Make sure that castellated holes on your module are aligned with spring pins on the board.
- Press your module down into the board until it clicks.
- Check whether all spring pins are inserted into castellated holes. If there are some misaligned spring pins, place them into castellated holes with tweezers.

Software Setup

Preferred Method The ESP-IDF development framework provides a preferred way of flashing binaries onto ESP32-DevKitS(-R). Please proceed to *Get Started*, where Section *Installation Step by Step* will quickly help you set up the development environment and then flash an application example onto your ESP32-DevKitS(-R).

Alternative Method As an alternative, Windows users can flash binaries using the Flash Download Tool. Just download it, unzip it, and follow the instructions inside the *doc* folder.

Note:

1. To flash binary files, ESP32 should be set to Firmware Download mode. This can be done either by the flash tool automatically, or by holding down the Boot button and tapping the EN button.
2. After flashing binary files, the Flash Download Tool restarts your ESP32 module and boots the flashed application by default.

Board Dimensions

Contents and Packaging

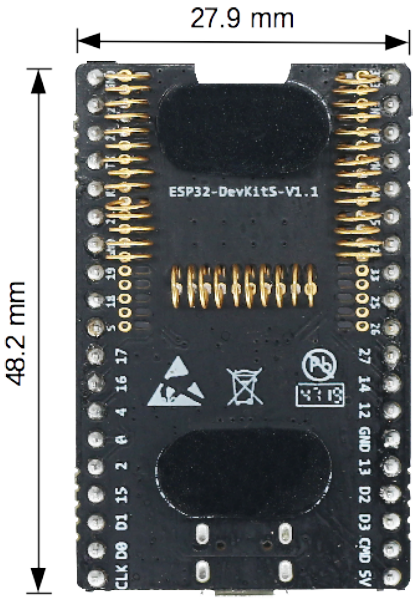

Fig. 40: ESP32-DevKitS board dimensions - back

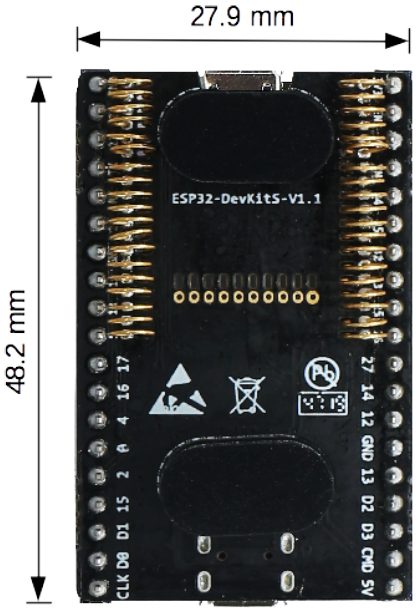

Fig. 41: ESP32-DevKitS-R board dimensions - back

Retail orders If you order a few samples, each ESP32-DevKitS(-R) comes in an individual package in either antistatic bag or any packaging depending on a retailer.

For retail orders, please go to https://www.espressif.com/en/company/contact/buy-a-sample.

Wholesale Orders If you order in bulk, the boards come in large cardboard boxes.

For wholesale orders, please go to https://www.espressif.com/en/contact-us/sales-questions.

Hardware Reference

Block Diagram A block diagram below shows the components of ESP32-DevKitS(-R) and their interconnections.

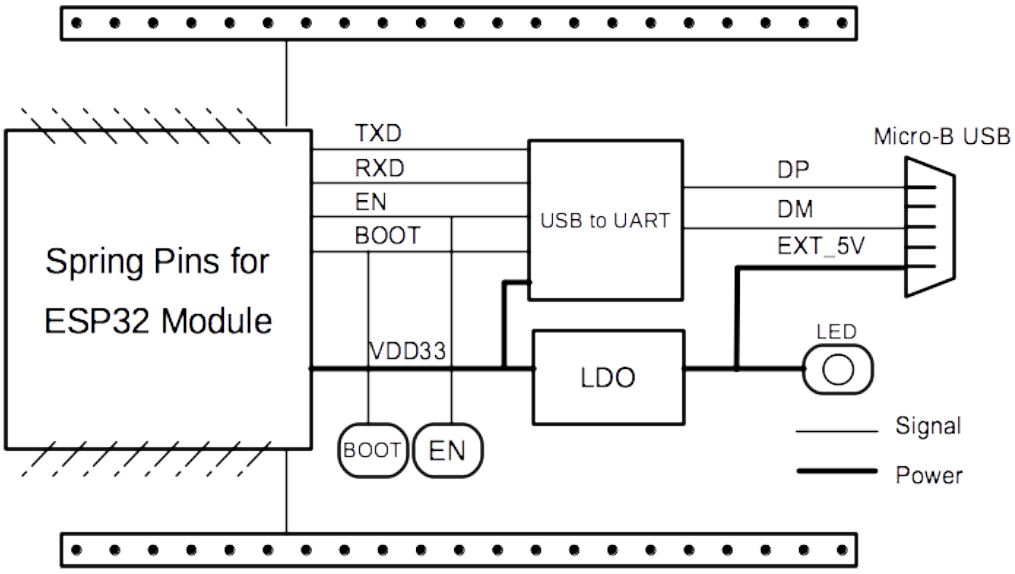

Fig. 42: ESP32-DevKitS(-R) (click to enlarge)

Power Supply Options There are three mutually exclusive ways to provide power to the board:

- Micro USB port, default power supply
- 5V and GND header pins
- 3V3 and GND header pins

It is advised to use the first option: micro USB port.

.	Label	Signal
L1	3V3	VDD 3V3
L2	EN	CHIP_PU
L3	VP	SENSOR_VP
L4	VN	SENSOR_VN
L5	34	GPIO34
L6	35	GPIO35
L7	32	GPIO32
L8	33	GPIO33
L9	25	GPIO25

continues on next page

Table 3 – continued from previous page

.	Label	Signal
L10	26	GPIO26
L11	27	GPIO27
L12	14	GPIO14
L13	12	GPIO12
L14	GND	GND
L15	13	GPIO13
L16	D2	SD_DATA2
L17	D3	SD_DATA3
L18	CMD	SD_CMD
L19	5V	External 5V
R1	GND	GND
R2	23	GPIO23
R3	22	GPIO22
R4	TX	U0TXD
R5	RX	U0RXD
R6	21	GPIO21
R7	GND	GND
R8	19	GPIO19
R9	18	GPIO18
R10	5	GPIO5
R11	17	GPIO17
R12	16	GPIO16
R13	4	GPIO4
R14	0	GPIO0
R15	2	GPIO2
R16	15	GPIO15
R17	D1	SD_DATA1
R18	D0	SD_DATA0
R19	CLK	SD_CLK

Header Blocks For the image of header blocks, please refer to *Description of Components*.

Related Documents

- ESP32-DevKitS(-R) Schematics (PDF)
- ESP32 Datasheet (PDF)
- ESP32-WROOM-32 Datasheet (PDF)
- ESP32-WROOM-32D & ESP32-WROOM-32U Datasheet (PDF)
- ESP32-SOLO-1 Datasheet (PDF)
- ESP32-WROVER Datasheet (PDF)
- ESP32-WROVER-B Datasheet (PDF)
- ESP Product Selector

1.3.6 ESP32-PICO-KIT-1

Overview

ESP32-PICO-KIT-1 is an ESP32-based development board produced by Espressif.

The core of this board is ESP32-PICO-V3 - a System-in-Package (SiP) module with complete Wi-Fi and Bluetooth functionalities. Compared to other ESP32 modules, ESP32-PICO-V3 integrates the following peripheral components in one single package, which otherwise would need to be installed separately:

- 40 MHz crystal oscillator
- 4 MB flash
- Filter capacitors
- RF matching network

This setup reduces the costs of additional external components as well as the cost of assembly and testing and also increases the overall usability of the product.

The development board features a USB-to-UART Bridge circuit which allows developers to connect the board to a computer's USB port for flashing and debugging.

All the IO signals and system power on ESP32-PICO-V3 are led out to two rows of 18 x 0.1" header pads on both sides of the development board for easy access. For compatibility with Dupont wires, all header pads are populated with two rows of male pin headers.

Note: ESP32-PICO-KIT-1 comes with male headers by default.

ESP32-PICO-KIT-1 provides the users with hardware for development of applications based on the ESP32, making it easier for users to explore ESP32 functionalities.

This guide covers:

- *Getting Started*: Provides an overview of the ESP32-PICO-KIT-1 and software setup instructions to get started.
- *Contents and Packaging*: Provides information about packaging and contents for retail and wholesale orders.
- *Hardware Reference*: Provides more detailed information about the ESP32-PICO-KIT-1's hardware.
- *Hardware Revision Details*: Covers revision history, known issues, and links to user guides for previous versions of the ESP32-PICO-KIT-1.
- *Related Documents*: Gives links to related documentation.

Getting Started

This section describes how to get started with the ESP32-PICO-KIT-1. It begins with a few introductory sections about the ESP32-PICO-KIT-1, then Section *Start Application Development* provides instructions on how to flash firmware onto the ESP32-PICO-KIT-1.

Description of Components The following figure and the table below describe the key components, interfaces, and controls of the ESP32-PICO-KIT-1 board.

Below is the description of the items identified in the figure starting from the top left corner and going clockwise.

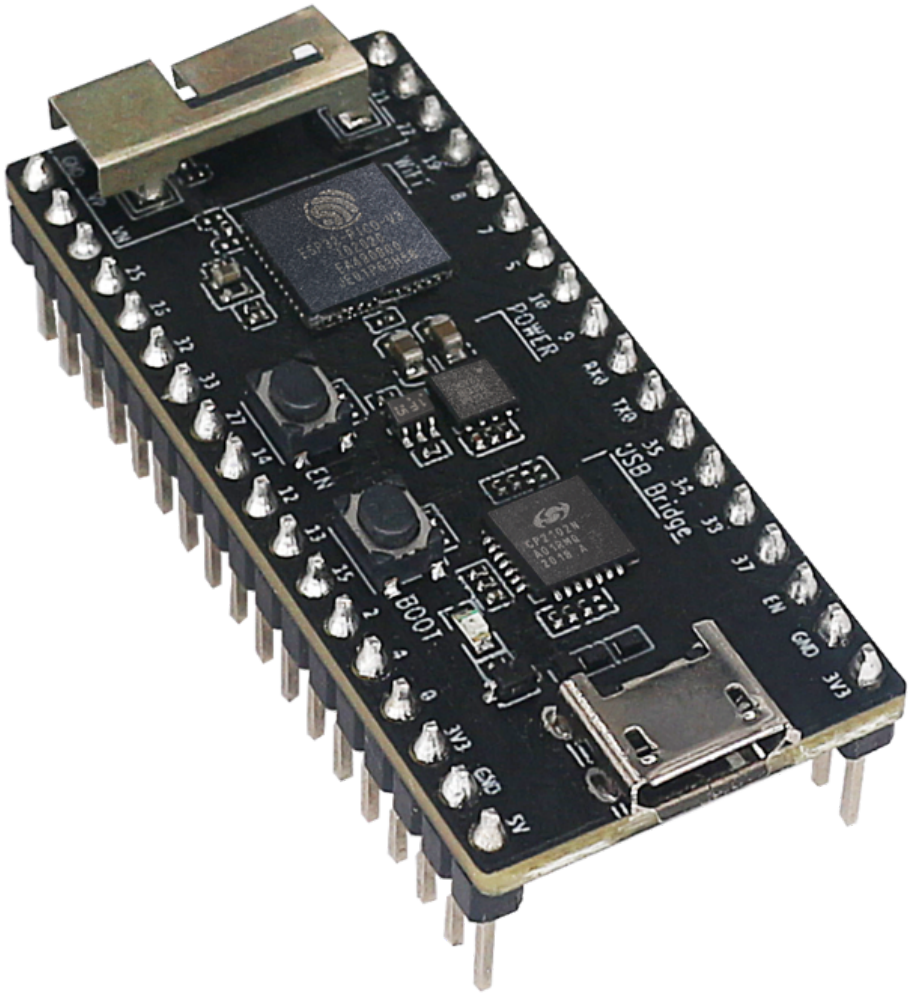

Fig. 43: ESP32-PICO-KIT-1 Overview (click to enlarge)

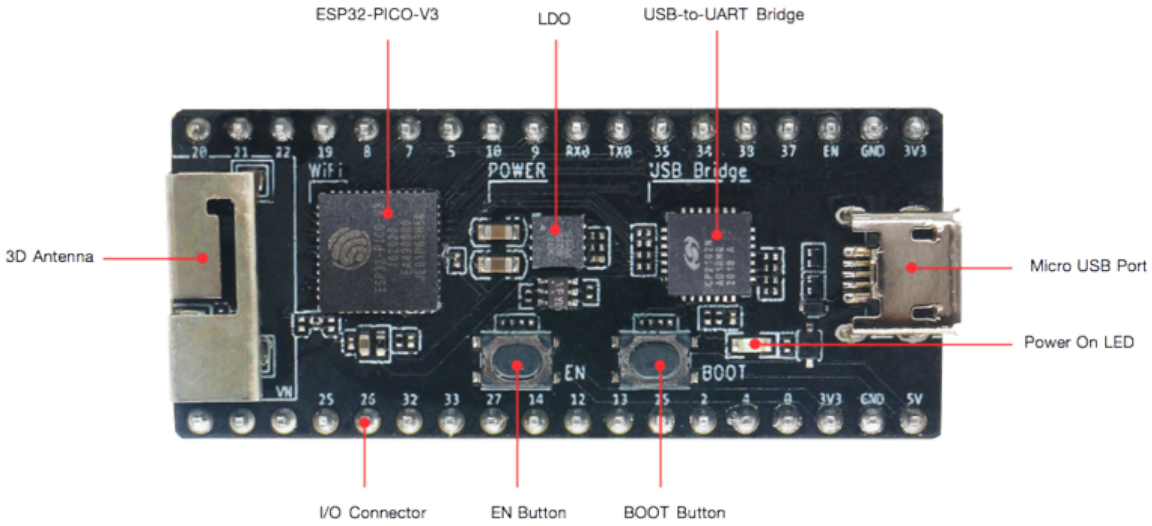

Fig. 44: ESP32-PICO-KIT-1 board layout - front (click to enlarge)

Key Component	Description
ESP32-PICO-V3	Standard ESP32-PICO-V3 module soldered to the ESP32-PICO-KIT-1 board. The complete ESP32 system on a chip (ESP32 SoC) has been integrated into the SiP module, requiring only an external antenna with LC matching network, decoupling capacitors, and a pull-up resistor for EN signals to function properly.
LDO	5V-to-3.3V Low dropout voltage regulator (LDO).
USB-to-UART bridge	CP2102N, single-chip USB-to-UART bridge that offers up to 3 Mbps transfers rates.
Micro USB Port	USB interface. Power supply for the board as well as the communication interface between a computer and the board.
5V Power On LED	This red LED turns on when power is supplied to the board. For details, see the schematic in *Related Documents*.
I/O Connector	All the pins on ESP32-PICO-V3 are broken out to pin headers. You can program ESP32 to enable multiple functions, such as PWM, ADC, DAC, I2C, I2S, SPI, etc. For details, please see Section *Pin Descriptions*.
BOOT Button	Download button. Holding down **Boot** and then pressing **EN** initiates Firmware Download mode for downloading firmware through the serial port.
EN Button	Reset button.

Start Application Development Before powering up your ESP32-PICO-KIT-1, please make sure that the board is in good condition with no obvious signs of damage.

Required Hardware

- 1 x ESP32-PICO-KIT-1
- 1 x USB 2.0 A to Micro B cable

- 1 x Computer running Windows, Linux, or macOS

Software Setup Please proceed to *Get Started*, where Section *Installation Step by Step* will quickly help you set up the development environment.

Contents and Packaging

Retail Orders If you order one or several samples of the board, each ESP32-PICO-KIT-1 development board comes in an individual package.

For retail orders, please go to https://www.espressif.com/en/company/contact/buy-a-sample.

Wholesale Orders If you order in bulk, the boards come in large cardboard boxes.

For wholesale orders, please go to https://www.espressif.com/en/contact-us/sales-questions.

Hardware Reference

Block Diagram The block diagram below shows the main components of ESP32-PICO-KIT-1 and their interconnections.

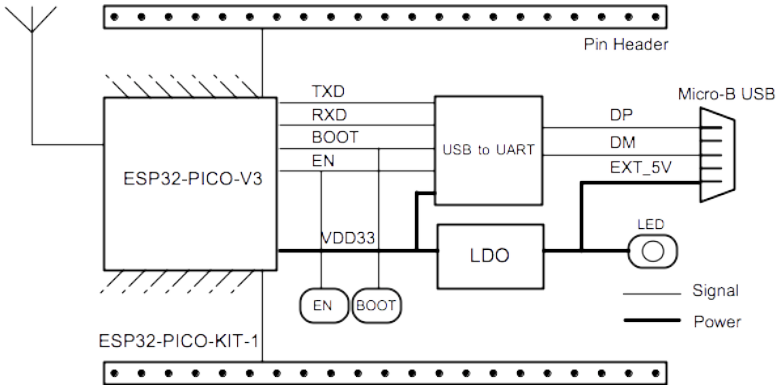

Fig. 45: ESP32-PICO-KIT-1 Block Diagram (click to enlarge)

Power Supply Options There are three mutually exclusive ways to provide power to the board:

- Micro USB port, default power supply
- 5V/GND header pins
- 3V3/GND header pins

> **Warning:** The power supply must be provided using **one and only one of the options above**, otherwise the board and/or the power supply source can be damaged.

Pin Descriptions The two tables below provide the **Name** and **Function** of I/O header pins on both sides of the board, see *Description of Components*. The pin numbering and header names are the same as in the schematic given in *Related Documents*.

Header J2

No.	Name	Type	Function
1	IO20	I/O	GPIO20
2	IO21	I/O	GPIO21, VSPIHD, EMAC_TX_EN
3	IO22	I/O	GPIO22, VSPIWP, U0RTS, EMAC_TXD1
4	IO19	I/O	GPIO19, VSPIQ, U0CTS, EMAC_TXD0
5	IO8	I/O	GPIO8, SD_DATA1, HS1_DATA1, U2CTS
6	IO7	I/O	GPIO7, SD_DATA0, HS1_DATA0, U2RTS
7	IO5	I/O	GPIO5, VSPICS0, HS1_DATA6, EMAC_RX_CLK
8	IO10	I/O	GPIO10, SD_DATA3, SPIWP, HS1_DATA3, U1TXD
9	IO9	I/O	GPIO9, SD_DATA2, SPIHD, HS1_DATA2, U1RXD
10	RXD0	I/O	GPIO3, U0RXD *(See 1)*, CLK_OUT2
11	TXD0	I/O	GPIO1, U0TXD *(See 1)*, CLK_OUT3, EMAC_RXD2
12	IO35	I	ADC1_CH7, RTC_GPIO5
13	IO34	I	ADC1_CH6, RTC_GPIO4
14	IO38	I	GPIO38, ADC1_CH2, RTC_GPIO2
15	IO37	I	GPIO37, ADC1_CH1, RTC_GPIO1
16	EN	I	CHIP_PU
17	GND	P	Ground
18	VDD33 (3V3)	P	3.3 V power supply

Header J3

No.	Name	Type	Function
1	GND	P	Ground
2	SENSOR_VP (FSVP)	I	GPIO36, ADC1_CH0, RTC_GPIO0
3	SENSOR_VN (FSVN)	I	GPIO39, ADC1_CH3, RTC_GPIO3
4	IO25	I/O	GPIO25, DAC_1, ADC2_CH8, RTC_GPIO6, EMAC_RXD0
5	IO26	I/O	GPIO26, DAC_2, ADC2_CH9, RTC_GPIO7, EMAC_RXD1
6	IO32	I/O	32K_XP *(See 2a)*, ADC1_CH4, TOUCH9, RTC_GPIO9
7	IO33	I/O	32K_XN *(See 2b)*, ADC1_CH5, TOUCH8, RTC_GPIO8
8	IO27	I/O	GPIO27, ADC2_CH7, TOUCH7, RTC_GPIO17, EMAC_RX_DV
9	IO14	I/O	ADC2_CH6, TOUCH6, RTC_GPIO16, MTMS, HSPICLK, HS2_CLK, SD_CLK, EMAC_TXD2
10	IO12	I/O	ADC2_CH5, TOUCH5, RTC_GPIO15, MTDI *(See 3)*, HSPIQ, HS2_DATA2, SD_DATA2, EMAC_TXD3
11	IO13	I/O	ADC2_CH4, TOUCH4, RTC_GPIO14, MTCK, HSPID, HS2_DATA3, SD_DATA3, EMAC_RX_ER
12	IO15	I/O	ADC2_CH3, TOUCH3, RTC_GPIO13, MTDO, HSPICS0, HS2_CMD, SD_CMD, EMAC_RXD3
13	IO2	I/O	ADC2_CH2, TOUCH2, RTC_GPIO12, HSPIWP, HS2_DATA0, SD_DATA0
14	IO4	I/O	ADC2_CH0, TOUCH0, RTC_GPIO10, HSPIHD, HS2_DATA1, SD_DATA1, EMAC_TX_ER
15	IO0	I/O	ADC2_CH1, TOUCH1, RTC_GPIO11, CLK_OUT1, EMAC_TX_CLK
16	VDD33 (3V3)	P	3.3V power supply
17	GND	P	Ground
18	EXT_5V (5V)	P	5V power supply

The following notes give more information about the items in the tables above.

1. This pin is connected to the pin of the USB bridge chip on the board.
2. 32.768 kHz crystal oscillator: a) input b) output
3. The operating voltage of ESP32-PICO-KIT-1' s embedded SPI flash is 3.3 V. Therefore, the strapping pin MTDI should be pulled down during the module power-on reset. If connected, please make sure that this pin is not held up on reset.

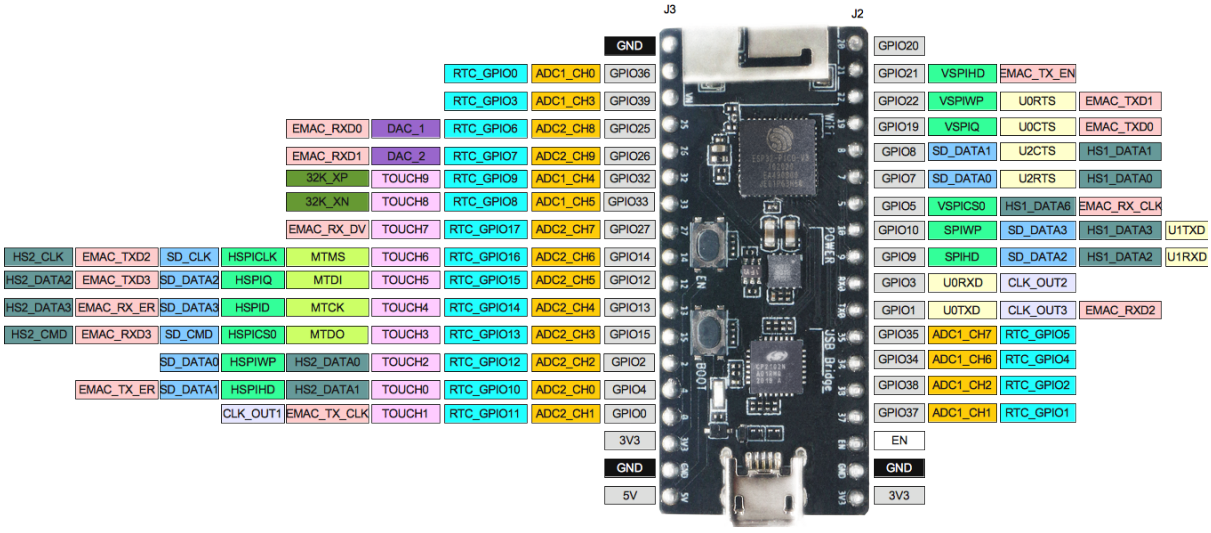

Fig. 46: ESP32-PICO-KIT-1 Pin Layout(click to enlarge)

Pin Layout

Hardware Revision Details

No previous versions available.

Related Documents

- ESP32-PICO-V3 Datasheet (PDF)
- ESP Product Selector
- ESP32-PICO-KIT-1 Schematic (PDF)
- ESP32-PICO-KIT-1 PCB Layout (PDF)

For other design documentation for the board, please contact us at sales@espressif.com.

1.3.7 ESP32-PICO-DevKitM-2

Overview

ESP32-PICO-DevKitM-2 is an ESP32-based development board produced by Espressif.

The core of this board is ESP32-PICO-MINI-02(02U) module with complete Wi-Fi and Bluetooth functionalities. The development board features a USB-to-UART Bridge circuit which allows developers to connect the board to a computer's USB port for flashing and debugging.

All the IO signals and system power on ESP32-PICO-MINI-02(02U) are led out to two rows of 18 x 0.1" header pads on both sides of the development board for easy access. For compatibility with Dupont wires, all header pads are populated with two rows of male pin headers.

Note: ESP32-PICO-DevKitM-2 comes with male headers by default.

ESP32-PICO-DevKitM-2 provides the users with hardware for development of applications based on the ESP32, making it easier for users to explore ESP32 functionalities.

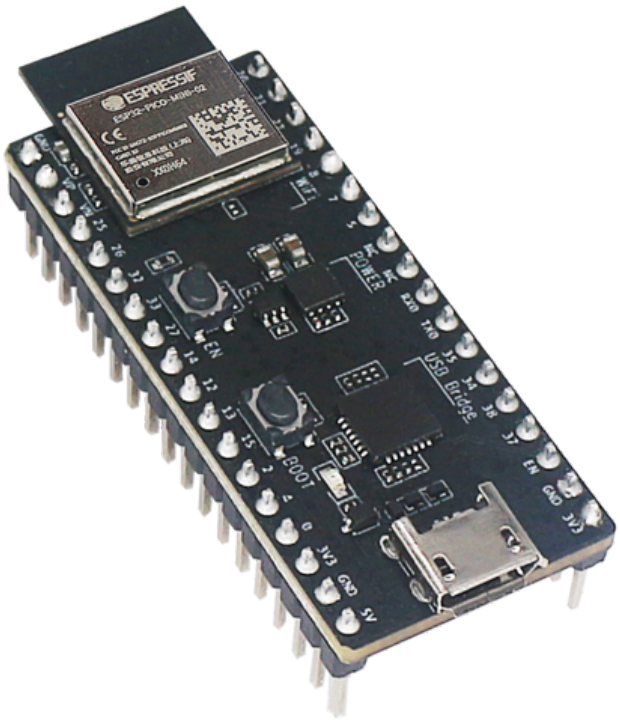

Fig. 47: ESP32-PICO-DevKitM-2 Overview (click to enlarge)

This guide covers:

- *Getting Started*: Provides an overview of the ESP32-PICO-DevKitM-2 and software setup instructions to get started.
- *Contents and Packaging*: Provides information about packaging and contents for retail and wholesale orders.
- *Hardware Reference*: Provides more detailed information about the ESP32-PICO-DevKitM-2's hardware.
- *Hardware Revision Details*: Covers revision history, known issues, and links to user guides for previous versions (if any) of the ESP32-PICO-DevKitM-2.
- *Related Documents*: Gives links to related documentation.

Getting Started

This section describes how to get started with the ESP32-PICO-DevKitM-2. It begins with a few introductory sections about the ESP32-PICO-DevKitM-2, then Section *Start Application Development* provides instructions on how to flash

firmware onto the ESP32-PICO-DevKitM-2.

Description of Components The following figure and the table below describe the key components, interfaces, and controls of the ESP32-PICO-DevKitM-2 board. We take the board with a ESP32-PICO-MINI-02 module as an example in the following sections.

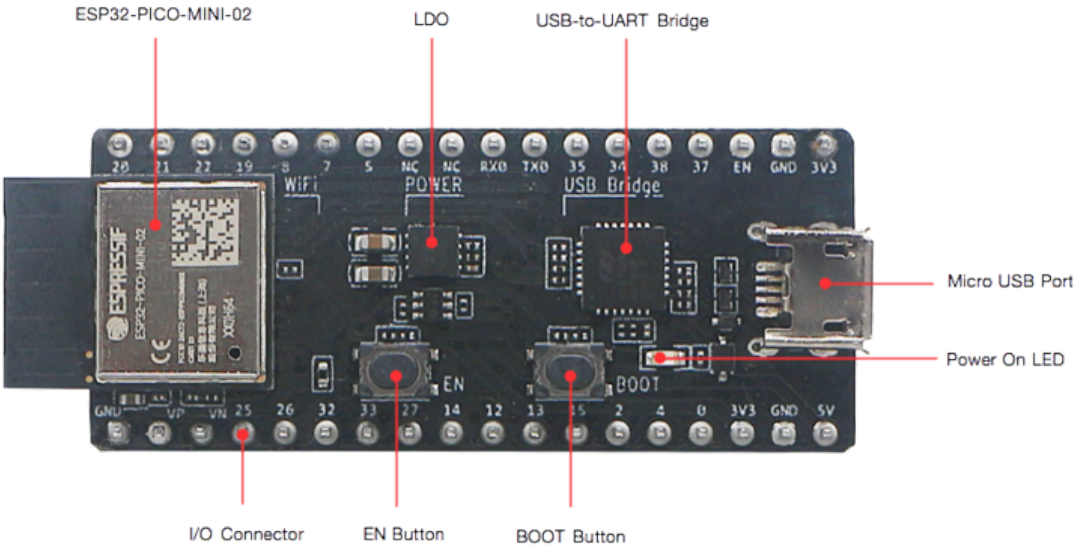

Fig. 48: ESP32-PICO-DevKitM-2 board layout - front (click to enlarge)

Below is the description of the items identified in the figure starting from the top left corner and going clockwise.

Key Component	Description
ESP32-PICO-MINI-02	Standard ESP32-PICO-MINI-02 module soldered to the ESP32-PICO-DevKitM-2 board. The complete ESP32 system on a chip (ESP32 SoC) has been integrated into the module. Users can also select the board with ESP32-PICO-MINI-02U soldered.
LDO	5V-to-3.3V Low dropout voltage regulator (LDO).
USB-to-UART bridge	CP2102N, single-chip USB-UART bridge that offers up to 3 Mbps transfers rates.
Micro-B USB Port	USB interface. Power supply for the board as well as the communication interface between a computer and the board.
5V Power On LED	This red LED turns on when power is supplied to the board. For details, see the schematic in *Related Documents*.
I/O Connector	All the pins on ESP32-PICO-MINI-02 are broken out to pin headers. You can program ESP32 to enable multiple functions, such as PWM, ADC, DAC, I2C, I2S, SPI, etc. For details, please see Section *Pin Descriptions*.
BOOT Button	Download button. Holding down **Boot** and then pressing **EN** initiates Firmware Download mode for downloading firmware through the serial port.
EN Button	Reset button.

Start Application Development Before powering up your ESP32-PICO-DevKitM-2, please make sure that the board is in good condition with no obvious signs of damage.

Required Hardware

- 1 x ESP32-PICO-DevKitM-2
- 1 x USB 2.0 A to Micro B cable
- 1 x Computer running Windows, Linux, or macOS

Software Setup Please proceed to *Get Started*, where Section *Installation Step by Step* will quickly help you set up the development environment.

Contents and Packaging

Retail Orders If you order one or several samples of the board, each ESP32-PICO-DevKitM-2 development board comes in an individual package.

For retail orders, please go to https://www.espressif.com/en/company/contact/buy-a-sample.

Wholesale Orders If you order in bulk, the boards come in large cardboard boxes.

For wholesale orders, please go to https://www.espressif.com/en/contact-us/sales-questions.

Hardware Reference

Block Diagram The block diagram below shows the main components of ESP32-PICO-DevKitM-2 and their interconnections.

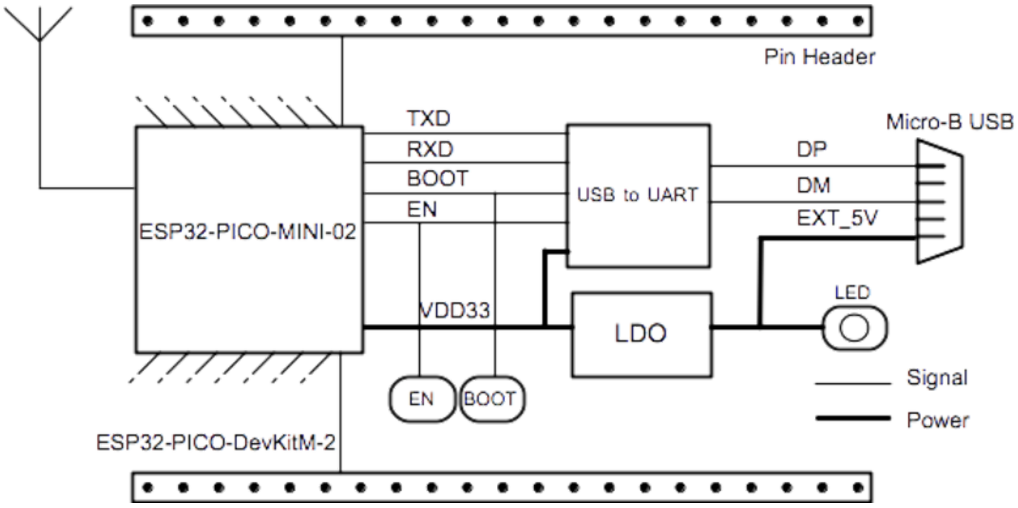

Fig. 49: ESP32-PICO-DevKitM-2 Block Diagram (click to enlarge)

Power Supply Options There are three mutually exclusive ways to provide power to the board:

- Micro USB port, default power supply
- 5V/GND header pins
- 3V3/GND header pins

> **Warning:** The power supply must be provided using **one and only one of the options above**, otherwise the board and/or the power supply source can be damaged.

Pin Descriptions The two tables below provide the **Name** and **Function** of I/O header pins on both sides of the board, see *Description of Components*. The pin numbering and header names are the same as in the schematic given in *Related Documents*.

Header J2

No.	Name	Type	Function
1	IO20	I/O	GPIO20
2	IO21	I/O	GPIO21, VSPIHD, EMAC_TX_EN
3	IO22	I/O	GPIO22, VSPIWP, U0RTS, EMAC_TXD1
4	IO19	I/O	GPIO19, VSPIQ, U0CTS, EMAC_TXD0
5	IO8	I/O	GPIO8, SD_DATA1, HS1_DATA1, U2CTS
6	IO7	I/O	GPIO7, SD_DATA0, HS1_DATA0, U2RTS
7	IO5	I/O	GPIO5, VSPICS0, HS1_DATA6, EMAC_RX_CLK
8	NC	-	NC
9	NC	-	NC
10	RXD0	I/O	GPIO3, U0RXD *(See 1)*, CLK_OUT2
11	TXD0	I/O	GPIO1, U0TXD *(See 1)*, CLK_OUT3, EMAC_RXD2
12	IO35	I	ADC1_CH7, RTC_GPIO5
13	IO34	I	ADC1_CH6, RTC_GPIO4
14	IO38	I	GPIO38, ADC1_CH2, RTC_GPIO2
15	IO37	I	GPIO37, ADC1_CH1, RTC_GPIO1
16	EN	I	CHIP_PU
17	GND	P	Ground
18	VDD33 (3V3)	P	3.3 V power supply

Header J3

No.	Name	Type	Function
1	GND	P	Ground
2	SENSOR_VP (FSVP)	I	GPIO36, ADC1_CH0, RTC_GPIO0
3	SENSOR_VN (FSVN)	I	GPIO39, ADC1_CH3, RTC_GPIO3
4	IO25	I/O	GPIO25, DAC_1, ADC2_CH8, RTC_GPIO6, EMAC_RXD0
5	IO26	I/O	GPIO26, DAC_2, ADC2_CH9, RTC_GPIO7, EMAC_RXD1
6	IO32	I/O	32K_XP *(See 2a)*, ADC1_CH4, TOUCH9, RTC_GPIO9
7	IO33	I/O	32K_XN *(See 2b)*, ADC1_CH5, TOUCH8, RTC_GPIO8
8	IO27	I/O	GPIO27, ADC2_CH7, TOUCH7, RTC_GPIO17, EMAC_RX_DV
9	IO14	I/O	ADC2_CH6, TOUCH6, RTC_GPIO16, MTMS, HSPICLK, HS2_CLK, SD_CLK, EMAC_TXD2
10	IO12	I/O	ADC2_CH5, TOUCH5, RTC_GPIO15, MTDI *(See 3)*, HSPIQ, HS2_DATA2, SD_DATA2, EMAC_TXD3
11	IO13	I/O	ADC2_CH4, TOUCH4, RTC_GPIO14, MTCK, HSPID, HS2_DATA3, SD_DATA3, EMAC_RX_ER
12	IO15	I/O	ADC2_CH3, TOUCH3, RTC_GPIO13, MTDO, HSPICS0, HS2_CMD, SD_CMD, EMAC_RXD3
13	IO2	I/O	ADC2_CH2, TOUCH2, RTC_GPIO12, HSPIWP, HS2_DATA0, SD_DATA0
14	IO4	I/O	ADC2_CH0, TOUCH0, RTC_GPIO10, HSPIHD, HS2_DATA1, SD_DATA1, EMAC_TX_ER
15	IO0	I/O	ADC2_CH1, TOUCH1, RTC_GPIO11, CLK_OUT1, EMAC_TX_CLK
16	VDD33 (3V3)	P	3.3V power supply
17	GND	P	Ground
18	EXT_5V (5V)	P	5V power supply

The following notes give more information about the items in the tables above.

1. This pin is connected to the pin of the USB bridge chip on the board.
2. 32.768 kHz crystal oscillator: a) input b) output
3. The operating voltage of ESP32-PICO-DevKitM-2' s embedded SPI flash is 3.3 V. Therefore, the strapping pin MTDI should be pulled down during the module power-on reset. If connected, please make sure that this pin is not held up on reset.

Pin Layout

Hardware Revision Details

No previous versions available.

Related Documents

- ESP32-PICO-MINI-02 & ESP32-PICO-MINI-1U Datasheet (PDF)
- ESP Product Selector
- ESP32-PICO-DevKitM-2 Schematic (PDF)
- ESP32-PICO-DevKitM-2 PCB Layout (PDF)

For other design documentation for the board, please contact us at sales@espressif.com.

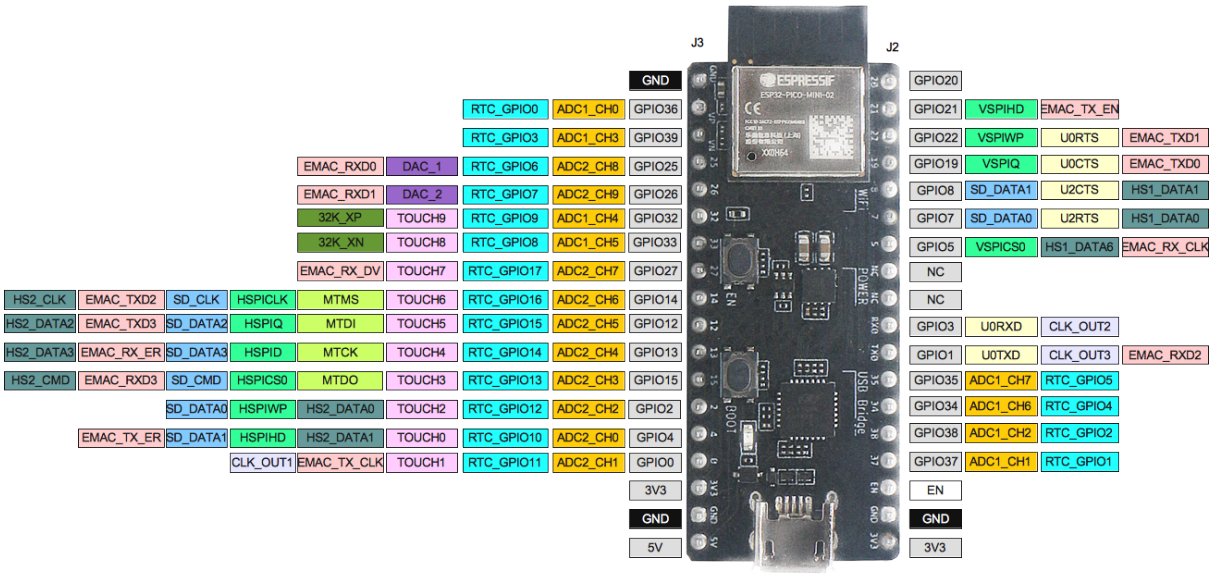

Fig. 50: ESP32-PICO-DevKitM-2 Pin Layout (click to enlarge)

1.3.8 ESP32-DevKitM-1

This user guide will help you get started with ESP32-DevKitM-1 and will also provide more in-depth information.

ESP32-DevKitM-1 is an ESP32-MINI-1(1U)-based development board produced by Espressif. Most of the I/O pins are broken out to the pin headers on both sides for easy interfacing. Users can either connect peripherals with jumper wires or mount ESP32-DevKitM-1 on a breadboard.

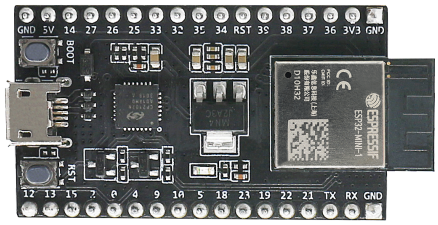	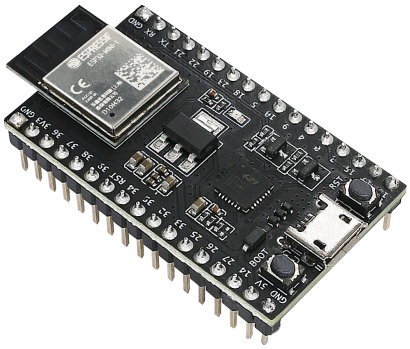
ESP32-DevKitM-1 - front	ESP32-DevKitM-1 - isometric

The document consists of the following major sections:

- *Getting started*: Provides an overview of the ESP32-DevKitM-1 and hardware/software setup instructions to get started.
- *Hardware reference*: Provides more detailed information about the ESP32-DevKitM-1 ' s hardware.
- *Related Documents*: Gives links to related documentaiton.

Getting Started

This section describes how to get started with ESP32-DevKitM-1. It begins with a few introductory sections about the ESP32-DevKitM-1, then Section *Start Application Development* provides instructions on how to do the initial hardware setup and then how to flash firmware onto the ESP32-DevKitM-1.

Overview This is a small and convenient development board that features:

- ESP32-MINI-1, or ESP32-MINI-1U module
- USB-to-serial programming interface that also provides power supply for the board
- pin headers
- pushbuttons for reset and activation of Firmware Download mode
- a few other components

Contents and Packaging

Retail orders If you order a few samples, each ESP32-DevKitM-1 comes in an individual package in either anti-static bag or any packaging depending on your retailer.

For retail orders, please go to https://www.espressif.com/en/company/contact/buy-a-sample.

Wholesale Orders If you order in bulk, the boards come in large cardboard boxes.

For wholesale orders, please go to https://www.espressif.com/en/contact-us/sales-questions.

Description of Components The following figure and the table below describe the key components, interfaces and controls of the ESP32-DevKitM-1 board. We take the board with a ESP32-MINI-1 module as an example in the following sections.

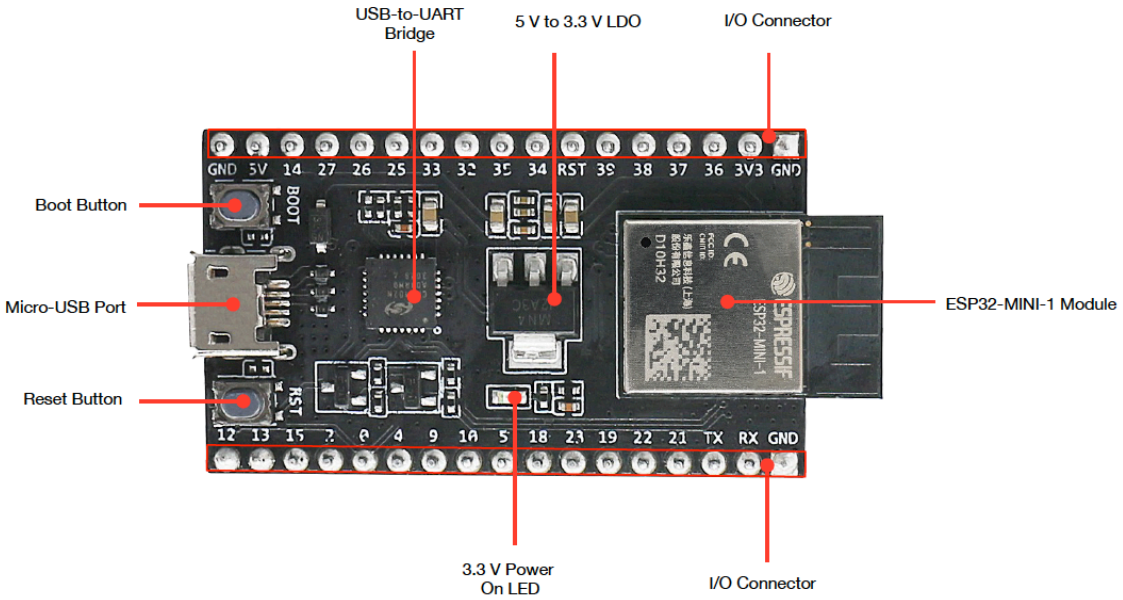

Fig. 51: ESP32-DevKitM-1 - front

Key Component	Description
On-board module	ESP32-MINI-1 module or ESP32-MINI-1U module. ESP32-MINI-1 comes with an on-board PCB antenna. ESP32-MINI-1U comes with an external antenna connector. The two modules both have a 4 MB flash in chip package. For details, please see ESP32-MINI-1 & ESP32-MINI-1U Datasheet.
5 V to 3.3 V LDO	Power regulator converts 5 V to 3.3 V.
Boot Button	Download button. Holding down **Boot** and then pressing **Reset** initiates Firmware Download mode for downloading firmware through the serial port.
Reset Button	Reset Button
Micro-USB Port	USB interface. Power supply for the board as well as the communication interface between a computer and the ESP32 chip.
USB-to-UART Bridge	Single USB-UART bridge chip provides transfer rates up to 3 Mbps.
3.3 V Power On LED	Turns on when the USB is connected to the board. For details, please see the schematics in *Related Documents*.
I/O Connector	All available GPIO pins (except for the SPI bus for flash) are broken out to the pin headers on the board. Users can program ESP32 chip to enable multiple functions.

Start Application Development Before powering up your ESP32-DevKitM-1, please make sure that it is in good condition with no obvious signs of damage.

Required Hardware

- ESP32-DevKitM-1
- USB 2.0 cable (Standard-A to Micro-B)
- Computer running Windows, Linux, or macOS

Software Setup Please proceed to *Get Started*, where Section *Installation Step by Step* will quickly help you set up the development environment and then flash an application example onto your ESP32-DevKitM-1.

Attention: ESP32-DevKitM-1 is a board with a single core module, please enable single core mode (*CONFIG_FREERTOS_UNICORE*) in *menuconfig* before flashing your applications.

Hardware Reference

Block Diagram A block diagram below shows the components of ESP32-DevKitM-1 and their interconnections.

Power Source Select There are three mutually exclusive ways to provide power to the board:

- Micro USB port, default power supply
- 5V and GND header pins
- 3V3 and GND header pins

Warning:

- The power supply must be provided using **one and only one of the options above**, otherwise the board and/or the power supply source can be damaged.
- Power supply by micro USB port is recommended.

Pin Descriptions The table below provides the Name and Function of pins on both sides of the board. For peripheral pin configurations, please refer to ESP32 Datasheet.

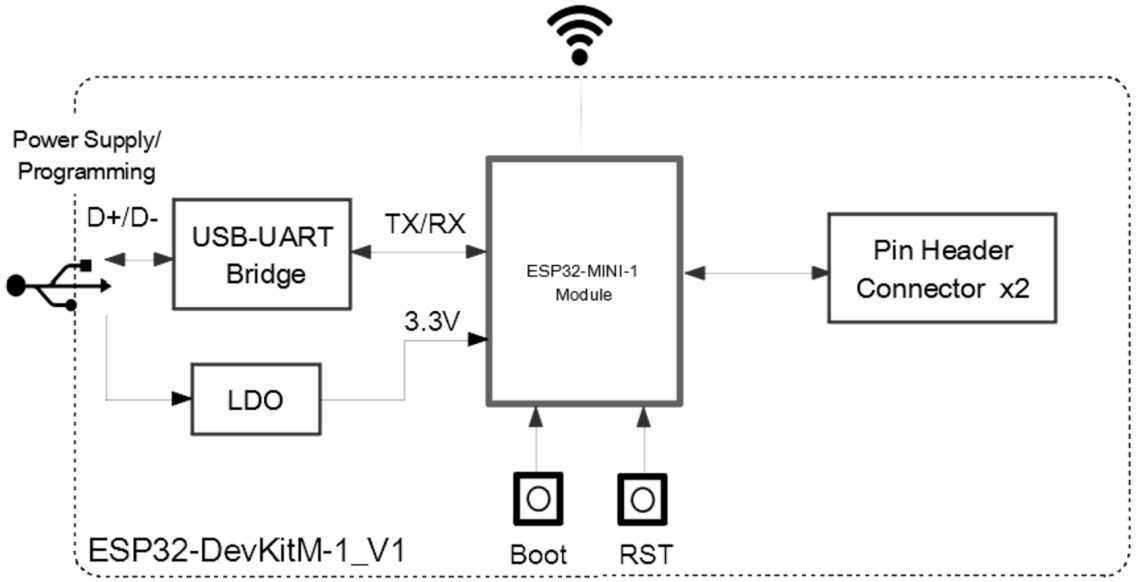

Fig. 52: ESP32-DevKitM-1

No.	Name	Type	Function
1	GND	P	Ground
2	3V3	P	3.3 V power supply
3	I36	I	GPIO36, ADC1_CH0, RTC_GPIO0
4	I37	I	GPIO37, ADC1_CH1, RTC_GPIO1
5	I38	I	GPIO38, ADC1_CH2, RTC_GPIO2
6	I39	I	GPIO39, ADC1_CH3, RTC_GPIO3
7	RST	I	Reset; High: enable; Low: powers off
8	I34	I	GPIO34, ADC1_CH6, RTC_GPIO4
9	I35	I	GPIO35, ADC1_CH7, RTC_GPIO5
10	IO32	I/O	GPIO32, XTAL_32K_P (32.768 kHz crystal oscillator input), ADC1_CH4, TOUCH9, RTC_GPIO9
11	IO33	I/O	GPIO33, XTAL_32K_N (32.768 kHz crystal oscillator output), ADC1_CH5, TOUCH8, RTC_GPIO8
12	IO25	I/O	GPIO25, DAC_1, ADC2_CH8, RTC_GPIO6, EMAC_RXD0
13	IO26	I/O	GPIO26, DAC_2, ADC2_CH9, RTC_GPIO7, EMAC_RXD1
14	IO27	I/O	GPIO27, ADC2_CH7, TOUCH7, RTC_GPIO17, EMAC_RX_DV
15	IO14	I/O	GPIO14, ADC2_CH6, TOUCH6, RTC_GPIO16, MTMS, HSPICLK, HS2_CLK, SD_CLK, EMAC_TXD2
16	5V	P	5 V power supply
17	IO12	I/O	GPIO12, ADC2_CH5, TOUCH5, RTC_GPIO15, MTDI, HSPIQ, HS2_DATA2, SD_DATA2, EMAC_TXD3
18	IO13	I/O	GPIO13, ADC2_CH4, TOUCH4, RTC_GPIO14, MTCK, HSPID, HS2_DATA3, SD_DATA3, EMAC_RX_ER
19	IO15	I/O	GPIO15, ADC2_CH3, TOUCH3, RTC_GPIO13, MTDO, HSPICS0, HS2_CMD, SD_CMD, EMAC_RXD3
20	IO2	I/O	GPIO2, ADC2_CH2, TOUCH2, RTC_GPIO12, HSPIWP, HS2_DATA0, SD_DATA0
21	IO0	I/O	GPIO0, ADC2_CH1, TOUCH1, RTC_GPIO11, CLK_OUT1, EMAC_TX_CLK

continues on next page

Table 4 – continued from previous page

No.	Name	Type	Function
22	IO4	I/O	GPIO4, ADC2_CH0, TOUCH0, RTC_GPIO10, HSPIHD, HS2_DATA1, SD_DATA1, EMAC_TX_ER
23	IO9	I/O	GPIO9, HS1_DATA2, U1RXD, SD_DATA2
24	IO10	I/O	GPIO10, HS1_DATA3, U1TXD, SD_DATA3
25	IO5	I/O	GPIO5, HS1_DATA6, VSPICS0, EMAC_RX_CLK
26	IO18	I/O	GPIO18, HS1_DATA7, VSPICLK
27	IO23	I/O	GPIO23, HS1_STROBE, VSPID
28	IO19	I/O	GPIO19, VSPIQ, U0CTS, EMAC_TXD0
29	IO22	I/O	GPIO22, VSPIWP, U0RTS, EMAC_TXD1
30	IO21	I/O	GPIO21, VSPIHD, EMAC_TX_EN
31	TXD0	I/O	GPIO1, U0TXD, CLK_OUT3, EMAC_RXD2
32	RXD0	I/O	GPIO3, U0RXD, CLK_OUT2

Hardware Revision Details

No previous versions available.

Related Documents

- ESP32-MINI-1 & ESP32-MINI-1U Datasheet (PDF)
- ESP32-DevKitM-1 Schematics (PDF)
- ESP32-DevKitM-1 PCB layout (PDF)
- ESP32-DevKitM-1 layout (DXF) - You can view it with Autodesk Viewer online
- ESP32 Datasheet (PDF)
- ESP Product Selector

For other design documentation for the board, please contact us at sales@espressif.com.

1.4 Installation Step by Step

This is a detailed roadmap to walk you through the installation process.

1.4.1 Setting up Development Environment

- *Step 1. Install prerequisites* for *Windows*, *Linux*, or *macOS*
- *Step 2. Get ESP-IDF*
- *Step 3. Set up the tools*
- *Step 4. Set up the environment variables*

1.4.2 Creating Your First Project

- *Step 5. Start a Project*
- *Step 6. Connect Your Device*
- *Step 7. Configure*
- *Step 8. Build the Project*
- *Step 9. Flash onto the Device*
- *Step 10. Monitor*

1.5 Step 1. Install prerequisites

Some tools need to be installed on the computer before proceeding to the next steps. Follow the links below for the instructions for your OS:

1.5.1 Standard Setup of Toolchain for Windows

Note: Currently only 64-bit versions of Windows are supported. 32-bit Windows can use the *Legacy GNU Make Build System*.

Introduction

ESP-IDF requires some prerequisite tools to be installed so you can build firmware for supported chips. The prerequisite tools include Python, Git, cross-compilers, CMake and Ninja build tools.

For this Getting Started we're going to use the Command Prompt, but after ESP-IDF is installed you can use *Eclipse* or another graphical IDE with CMake support instead.

Note: Previous versions of ESP-IDF used the *Legacy GNU Make Build System* and MSYS2 Unix compatibility environment. This is no longer required, ESP-IDF can be used from the Windows Command Prompt.

Note: Limitations: - The installation path of ESP-IDF and ESP-IDF Tools must not be longer than 90 characters. Too long installation paths might result in a failed build. - The installation path of Python or ESP-IDF must not contain white spaces or parentheses. - The installation path of Python or ESP-IDF should not contain special characters (non-ASCII) unless the operating system is configured with "Unicode UTF-8" support.

System Administrator can enable the support via Control Panel - Change date, time, or number formats - Administrative tab - Change system locale - check the option "Beta: Use Unicode UTF-8 for worldwide language support" - Ok and reboot the computer.

ESP-IDF Tools Installer

The easiest way to install ESP-IDF's prerequisites is to download one of ESP-IDF Tools Installers from this URL: https://dl.espressif.com/dl/esp-idf/?idf=4.4

What is the usecase for Online and Offline Installer Online Installer is very small and allows the installation of all available releases of ESP-IDF. The installer will download only necessary dependencies including Git For Windows during the installation process. The installer stores downloaded files in the cache directory `%userprofile%\.espressif`

Offline Installer does not require any network connection. The installer contains all required dependencies including Git For Windows .

Components of the installation The installer deploys the following components:

- Embedded Python
- Cross-compilers
- OpenOCD
- CMake and Ninja build tools

- ESP-IDF

The installer also allows reusing the existing directory with ESP-IDF. The recommended directory is `%userprofile%\Desktop\esp-idf` where `%userprofile%` is your home directory.

Launching ESP-IDF Environment At the end of the installation process you can check out option `Run ESP-IDF PowerShell Environment` or `Run ESP-IDF Command Prompt (cmd.exe)`. The installer will launch ESP-IDF environment in selected prompt.

`Run ESP-IDF PowerShell Environment`:

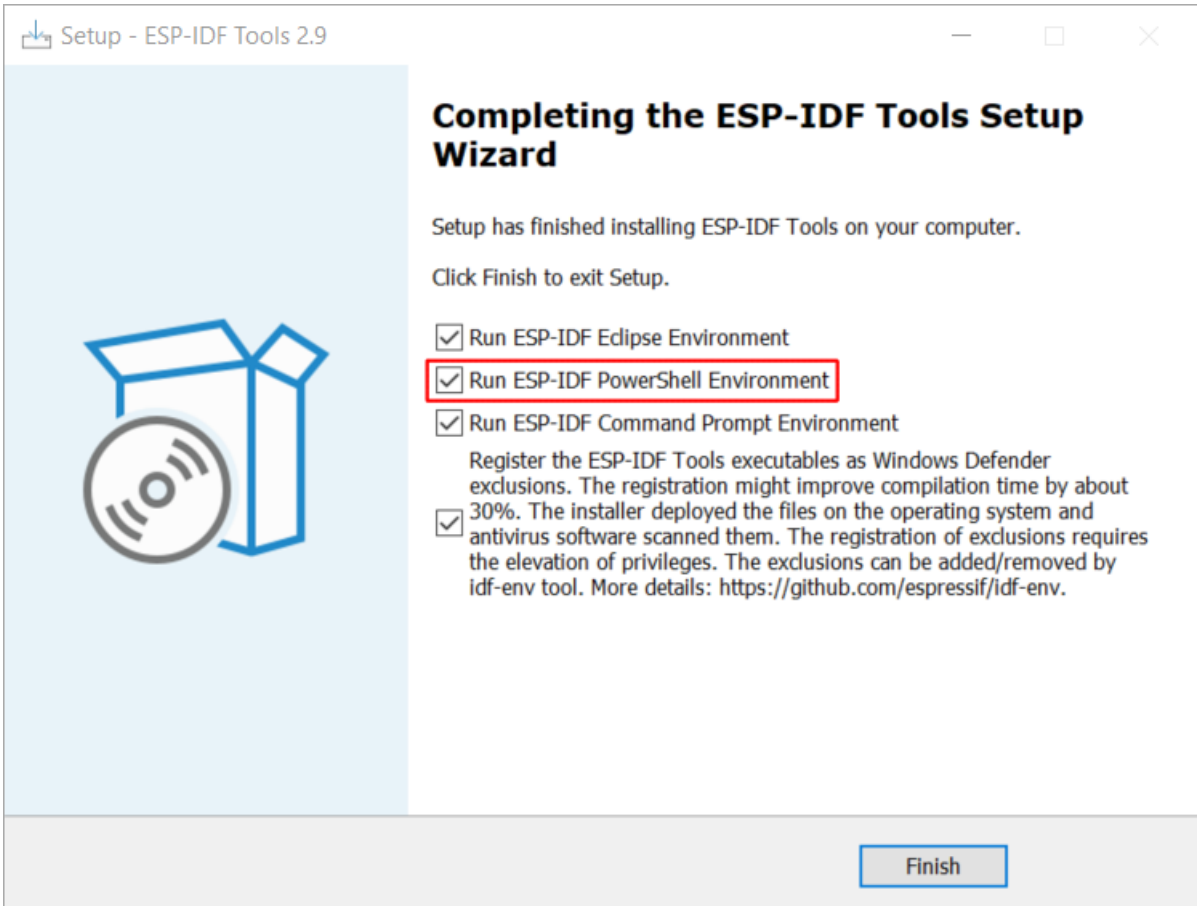

Fig. 53: Completing the ESP-IDF Tools Setup Wizard with Run ESP-IDF PowerShell Environment

`Run ESP-IDF Command Prompt (cmd.exe)`:

Using the Command Prompt

For the remaining Getting Started steps, we're going to use the Windows Command Prompt.

ESP-IDF Tools Installer also creates a shortcut in the Start menu to launch the ESP-IDF Command Prompt. This shortcut launches the Command Prompt (cmd.exe) and runs `export.bat` script to set up the environment variables (`PATH`, `IDF_PATH` and others). Inside this command prompt, all the installed tools are available.

Note that this shortcut is specific to the ESP-IDF directory selected in the ESP-IDF Tools Installer. If you have multiple ESP-IDF directories on the computer (for example, to work with different versions of ESP-IDF), you have two options to use them:

1. Create a copy of the shortcut created by the ESP-IDF Tools Installer, and change the working directory of the new shortcut to the ESP-IDF directory you wish to use.

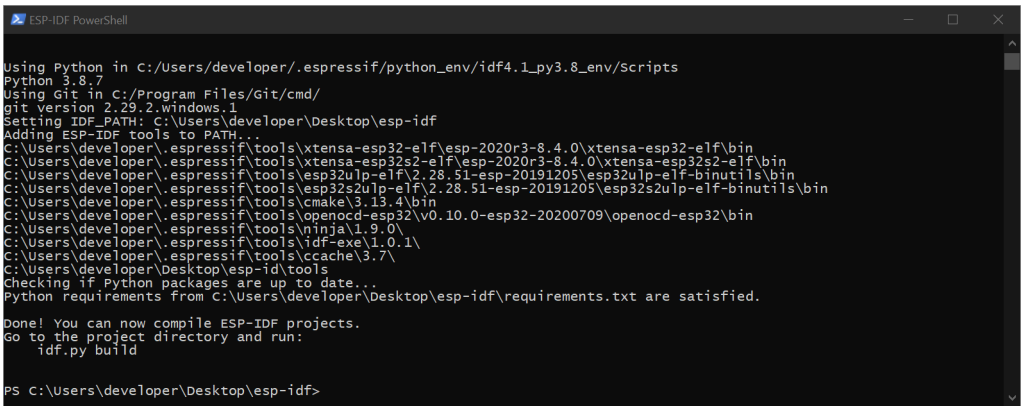

Fig. 54: ESP-IDF PowerShell

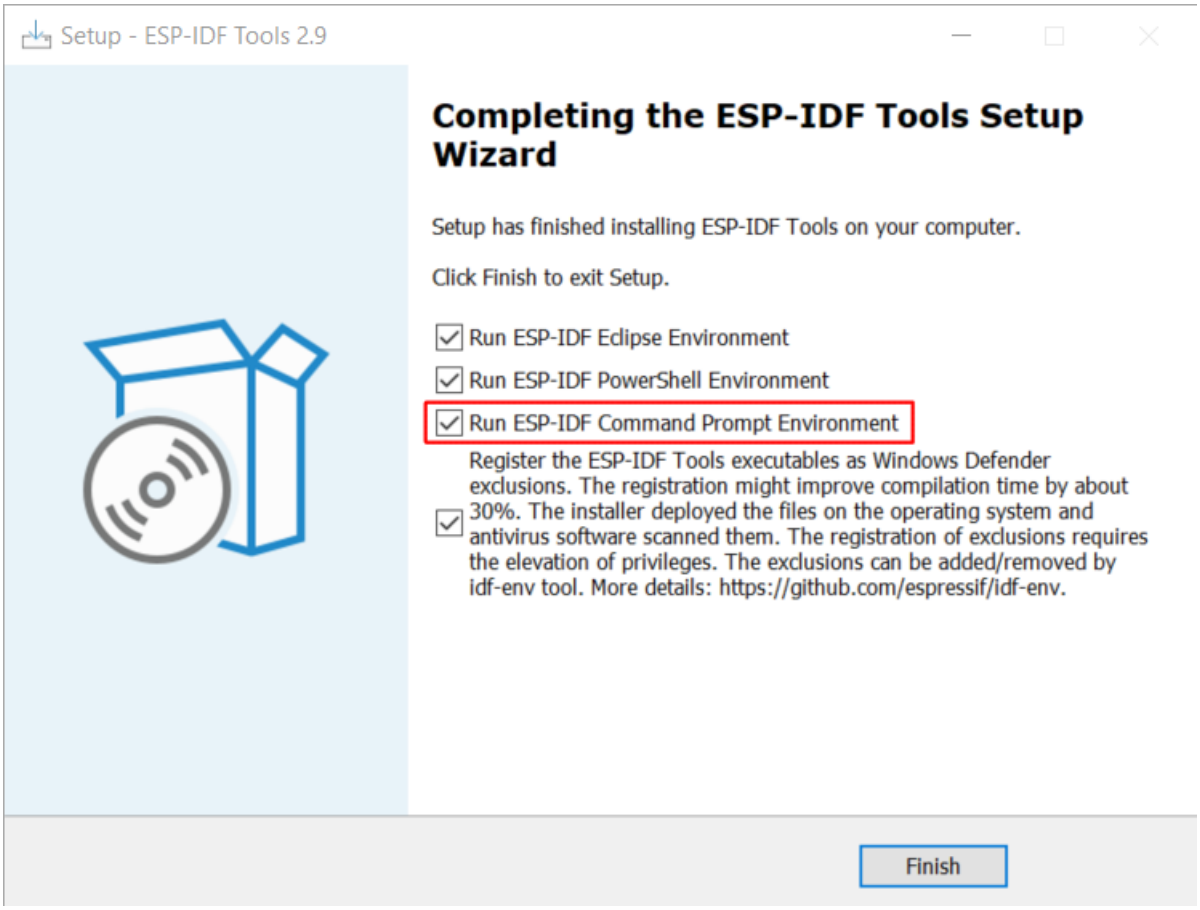

Fig. 55: Completing the ESP-IDF Tools Setup Wizard with Run ESP-IDF Command Prompt (cmd.exe)

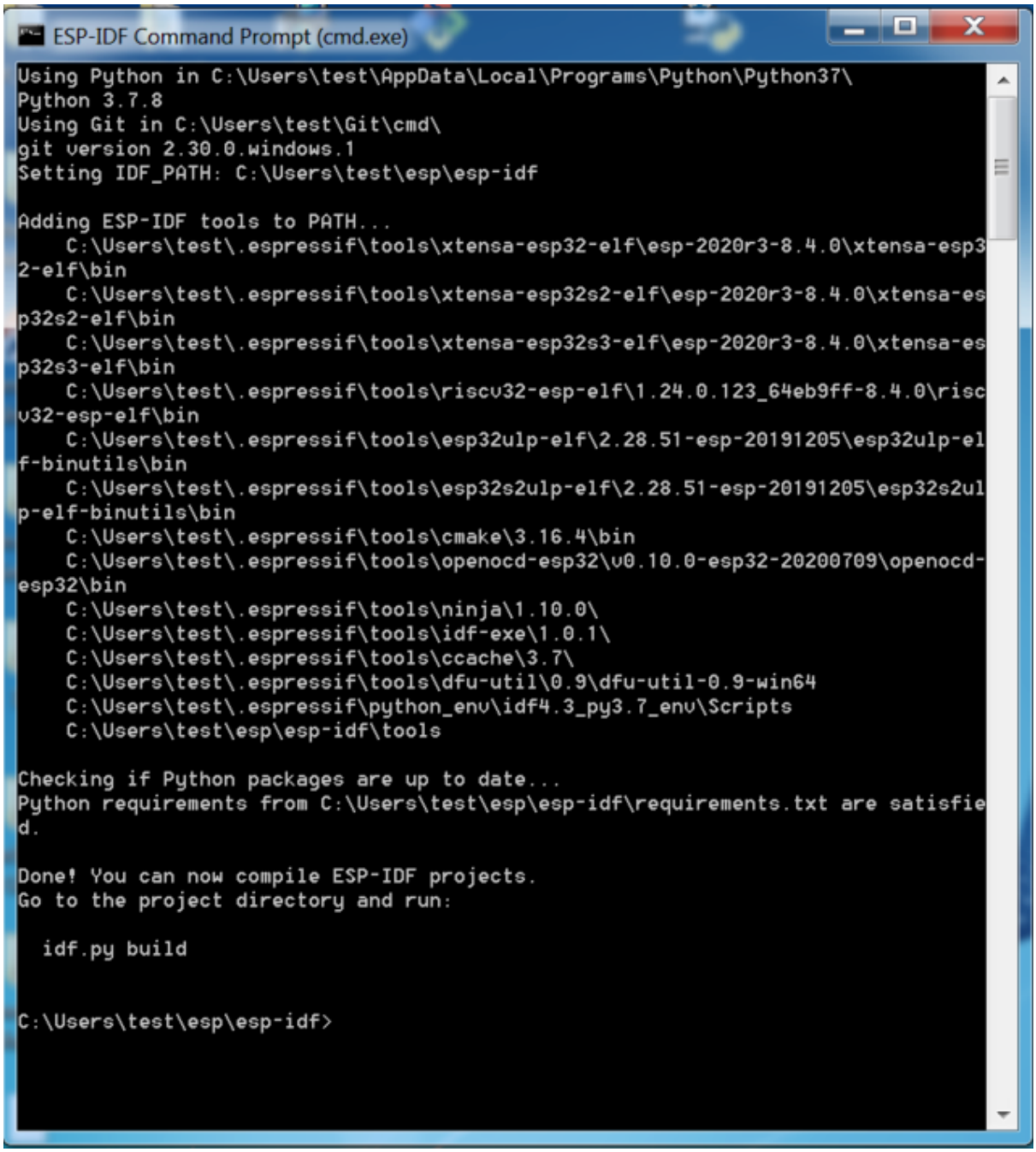

Fig. 56: ESP-IDF Command Prompt

2. Alternatively, run `cmd.exe`, then change to the ESP-IDF directory you wish to use, and run `export.bat`. Note that unlike the previous option, this way requires Python and Git to be present in `PATH`. If you get errors related to Python or Git not being found, use the first option.

Next Steps

If the ESP-IDF Tools Installer has finished successfully, then the development environment setup is complete. Proceed directly to *Step 5. Start a Project*.

Related Documents

For advanced users who want to customize the install process:

Updating ESP-IDF tools on Windows

Install ESP-IDF tools using a script From the Windows Command Prompt, change to the directory where ESP-IDF is installed. Then run:

```
install.bat
```

For Powershell, change to the directory where ESP-IDF is installed. Then run:

```
install.ps1
```

This will download and install the tools necessary to use ESP-IDF. If the specific version of the tool is already installed, no action will be taken. The tools are downloaded and installed into a directory specified during ESP-IDF Tools Installer process. By default, this is `C:\Users\username\.espressif`.

Add ESP-IDF tools to PATH using an export script ESP-IDF tools installer creates a Start menu shortcut for "ESP-IDF Command Prompt" . This shortcut opens a Command Prompt window where all the tools are already available.

In some cases, you may want to work with ESP-IDF in a Command Prompt window which wasn't started using that shortcut. If this is the case, follow the instructions below to add ESP-IDF tools to PATH.

In the command prompt where you need to use ESP-IDF, change to the directory where ESP-IDF is installed, then execute `export.bat`:

```
cd %userprofile%\esp\esp-idf
export.bat
```

Alternatively in the Powershell where you need to use ESP-IDF, change to the directory where ESP-IDF is installed, then execute `export.ps1`:

```
cd ~/esp/esp-idf
export.ps1
```

When this is done, the tools will be available in this command prompt.

1.5.2 Standard Setup of Toolchain for Linux

Install Prerequisites

To compile with ESP-IDF you need to get the following packages. The command to run depends on which distribution of Linux you are using:

- Ubuntu and Debian:

```
sudo apt-get install git wget flex bison gperf python3 python3-pip python3-
↪setuptools cmake ninja-build ccache libffi-dev libssl-dev dfu-util libusb-1.
↪0-0
```

- CentOS 7 & 8:

```
sudo yum -y update && sudo yum install git wget flex bison gperf python3␣
↪python3-pip python3-setuptools cmake ninja-build ccache dfu-util libusbx
```

CentOS 7 is still supported but CentOS version 8 is recommended for a better user experience.

- Arch:

```
sudo pacman -S --needed gcc git make flex bison gperf python-pip cmake ninja␣
↪ccache dfu-util libusb
```

Note:

- CMake version 3.5 or newer is required for use with ESP-IDF. Older Linux distributions may require updating, enabling of a "backports" repository, or installing of a "cmake3" package rather than "cmake".
- If you do not see your Linux distribution in the above list then please check its documentation to find out which command to use for package installation.

Additional Tips

Permission issues /dev/ttyUSB0 With some Linux distributions you may get the `Failed to open port /dev/ttyUSB0` error message when flashing the ESP32. *This can be solved by adding the current user to the dialout group*.

Python compatibility

ESP-IDF supports Python 3.6 or newer. It is recommended to upgrade your operating system to a recent version satisfying this requirement. Other options include the installation of Python from sources or the use of a Python version management system such as pyenv.

Next Steps

To carry on with development environment setup, proceed to *Step 2. Get ESP-IDF*.

1.5.3 Standard Setup of Toolchain for Mac OS

Install Prerequisites

ESP-IDF will use the version of Python installed by default on macOS.

- install pip:

```
sudo easy_install pip
```

- install CMake & Ninja build:
  - If you have HomeBrew, you can run:

    ```
    brew install cmake ninja dfu-util
    ```

  - If you have MacPorts, you can run:

    ```
    sudo port install cmake ninja dfu-util
    ```

  - Otherwise, consult the CMake and Ninja home pages for macOS installation downloads.
- It is strongly recommended to also install ccache for faster builds. If you have HomeBrew, this can be done via `brew install ccache` or `sudo port install ccache` on MacPorts.

Note: If an error like this is shown during any step:

```
xcrun: error: invalid active developer path (/Library/Developer/CommandLineTools),␣
↪missing xcrun at: /Library/Developer/CommandLineTools/usr/bin/xcrun
```

Then you will need to install the XCode command line tools to continue. You can install these by running `xcode-select --install`.

Installing Python 3 Basing on macOS Catalina 10.15 release notes, use of Python 2.7 is not recommended and Python 2.7 will not be included by default in future versions of macOS. Check what Python you currently have:

```
python --version
```

If the output is like `Python 2.7.17`, your default interpreter is Python 2.7. If so, also check if Python 3 isn't already installed on your computer:

```
python3 --version
```

If above command returns an error, it means Python 3 is not installed.

Below is an overview of steps to install Python 3.

- Installing with HomeBrew can be done as follows:

  ```
  brew install python3
  ```

- If you have MacPorts, you can run:

  ```
  sudo port install python38
  ```

Next Steps

To carry on with development environment setup, proceed to *Step 2. Get ESP-IDF*.

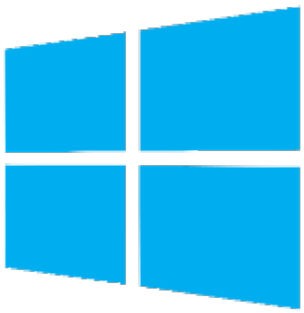		
Windows	Linux	Mac OS

Note: This guide uses the directory `~/esp` on Linux and macOS or `%userprofile%\esp` on Windows as an installation folder for ESP-IDF. You can use any directory, but you will need to adjust paths for the commands respectively. Keep in mind that ESP-IDF does not support spaces in paths.

1.6 Step 2. Get ESP-IDF

To build applications for the ESP32, you need the software libraries provided by Espressif in ESP-IDF repository.

To get ESP-IDF, navigate to your installation directory and clone the repository with `git clone`, following instructions below specific to your operating system.

1.6.1 Linux and macOS

Open Terminal, and run the following commands:

```
mkdir -p ~/esp
cd ~/esp
git clone -b v4.4.3 --recursive https://github.com/espressif/esp-idf.git
```

ESP-IDF will be downloaded into `~/esp/esp-idf`.

Consult *ESP-IDF Versions* for information about which ESP-IDF version to use in a given situation.

1.6.2 Windows

In addition to installing the tools, *ESP-IDF Tools Installer* for Windows introduced in Step 1 can also download a copy of ESP-IDF.

Consult *ESP-IDF Versions* for information about which ESP-IDF version to use in a given situation.

If you wish to download ESP-IDF without the help of ESP-IDF Tools Installer, refer to these *instructions*.

1.7 Step 3. Set up the tools

Aside from the ESP-IDF, you also need to install the tools used by ESP-IDF, such as the compiler, debugger, Python packages, etc.

1.7.1 Windows

ESP-IDF Tools Installer for Windows introduced in Step 1 installs all the required tools.

If you want to install the tools without the help of ESP-IDF Tools Installer, open the Command Prompt and follow these steps:

```
cd %userprofile%\esp\esp-idf
install.bat esp32
```

or with Windows PowerShell

```
cd ~/esp/esp-idf
./install.ps1 esp32
```

1.7.2 Linux and macOS

```
cd ~/esp/esp-idf
./install.sh esp32
```

or with Fish shell

```
cd ~/esp/esp-idf
./install.fish esp32
```

Note: To install tools for multiple targets you can specify those targets at once. For example: `./install.sh esp32,esp32c3,esp32s3`. To install tools for all supported targets, run the script without specifying targets `./install.sh` or use `./install.sh all`.

1.7.3 Alternative File Downloads

The tools installer downloads a number of files attached to GitHub Releases. If accessing GitHub is slow then it is possible to set an environment variable to prefer Espressif's download server for GitHub asset downloads.

Note: This setting only controls individual tools downloaded from GitHub releases, it doesn't change the URLs used to access any Git repositories.

Windows

To prefer the Espressif download server when running the ESP-IDF Tools Installer, mark the **Use Espressif download mirror instead of GitHub** in the screen **Select Components** section **Optimization**.

Linux and macOS

To prefer the Espressif download server when installing tools, use the following sequence of commands when running `install.sh`:

```
cd ~/esp/esp-idf
export IDF_GITHUB_ASSETS="dl.espressif.com/github_assets"
./install.sh
```

1.7.4 Customizing the tools installation path

The scripts introduced in this step install compilation tools required by ESP-IDF inside the user home directory: `$HOME/.espressif` on Linux and macOS, `%USERPROFILE%\.espressif` on Windows. If you wish to install the tools into a different directory, set the environment variable `IDF_TOOLS_PATH` before running the installation scripts. Make sure that your user account has sufficient permissions to read and write this path.

If changing the `IDF_TOOLS_PATH`, make sure it is set to the same value every time the Install script (`install.bat`, `install.ps1` or `install.sh`) and an Export script (`export.bat`, `export.ps1` or `export.sh`) are executed.

1.8 Step 4. Set up the environment variables

The installed tools are not yet added to the PATH environment variable. To make the tools usable from the command line, some environment variables must be set. ESP-IDF provides another script which does that.

1.8.1 Windows

ESP-IDF Tools Installer for Windows creates an "ESP-IDF Command Prompt" shortcut in the Start Menu. This shortcut opens the Command Prompt and sets up all the required environment variables. You can open this shortcut and proceed to the next step.

Alternatively, if you want to use ESP-IDF in an existing Command Prompt window, you can run:

```
%userprofile%\esp\esp-idf\export.bat
```

or with Windows PowerShell

```
.$HOME/esp/esp-idf/export.ps1
```

1.8.2 Linux and macOS

In the terminal where you are going to use ESP-IDF, run:

```
. $HOME/esp/esp-idf/export.sh
```

or for fish (supported only since fish version 3.0.0):

```
. $HOME/esp/esp-idf/export.fish
```

Note the space between the leading dot and the path!

If you plan to use esp-idf frequently, you can create an alias for executing `export.sh`:

1. Copy and paste the following command to your shell's profile (`.profile`, `.bashrc`, `.zprofile`, etc.)

   ```
   alias get_idf='. $HOME/esp/esp-idf/export.sh'
   ```

2. Refresh the configuration by restarting the terminal session or by running `source [path to profile]`, for example, `source ~/.bashrc`.

Now you can run `get_idf` to set up or refresh the esp-idf environment in any terminal session.

Technically, you can add `export.sh` to your shell's profile directly; however, it is not recommended. Doing so activates IDF virtual environment in every terminal session (including those where IDF is not needed), defeating the purpose of the virtual environment and likely affecting other software.

1.9 Step 5. Start a Project

Now you are ready to prepare your application for ESP32. You can start with get-started/hello_world project from examples directory in IDF.

Copy the project get-started/hello_world to `~/esp` directory:

1.9.1 Linux and macOS

```
cd ~/esp
cp -r $IDF_PATH/examples/get-started/hello_world .
```

1.9.2 Windows

```
cd %userprofile%\esp
xcopy /e /i %IDF_PATH%\examples\get-started\hello_world hello_world
```

There is a range of example projects in the examples directory in ESP-IDF. You can copy any project in the same way as presented above and run it. It is also possible to build examples in-place, without copying them first.

Important: The ESP-IDF build system does not support spaces in the paths to either ESP-IDF or to projects.

1.10 Step 6. Connect Your Device

Now connect your ESP32 board to the computer and check under what serial port the board is visible.

Serial ports have the following patterns in their names:

- **Windows**: names like `COM1`
- **Linux**: starting with `/dev/tty`
- **macOS**: starting with `/dev/cu.`

If you are not sure how to check the serial port name, please refer to *Establish Serial Connection with ESP32* for full details.

Note: Keep the port name handy as you will need it in the next steps.

1.11 Step 7. Configure

Navigate to your `hello_world` directory from *Step 5. Start a Project*, set ESP32 chip as the target and run the project configuration utility `menuconfig`.

1.11.1 Linux and macOS

```
cd ~/esp/hello_world
idf.py set-target esp32
idf.py menuconfig
```

1.11.2 Windows

```
cd %userprofile%\esp\hello_world
idf.py set-target esp32
idf.py menuconfig
```

Setting the target with `idf.py set-target esp32` should be done once, after opening a new project. If the project contains some existing builds and configuration, they will be cleared and initialized. The target may be saved in environment variable to skip this step at all. See *Selecting the Target* for additional information.

If the previous steps have been done correctly, the following menu appears:

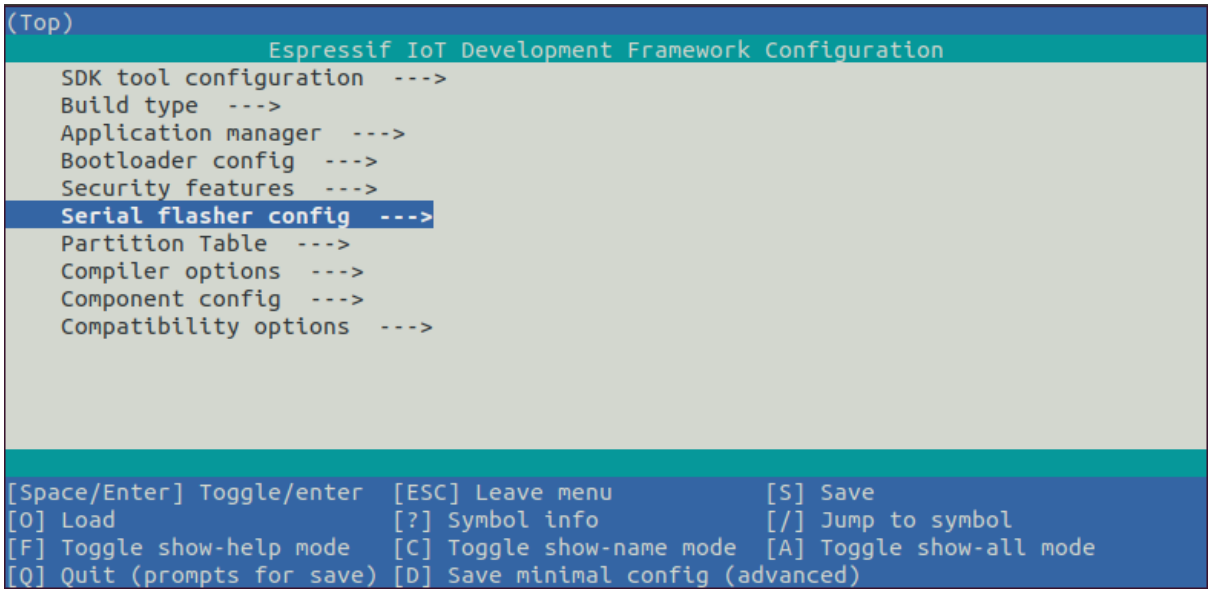

Fig. 57: Project configuration - Home window

You are using this menu to set up project specific variables, e.g. Wi-Fi network name and password, the processor speed, etc. Setting up the project with menuconfig may be skipped for "hello_word". This example will run with default configuration.

Attention: If you use ESP32-DevKitC board with the **ESP32-SOLO-1** module, or ESP32-DevKitM-1 board with the **ESP32-MIN1-1(1U)** module, enable single core mode (*CONFIG_FREERTOS_UNICORE*) in menuconfig before flashing examples.

Note: The colors of the menu could be different in your terminal. You can change the appearance with the option `--style`. Please run `idf.py menuconfig --help` for further information.

1.12 Step 8. Build the Project

Build the project by running:

```
idf.py build
```

This command will compile the application and all ESP-IDF components, then it will generate the bootloader, partition table, and application binaries.

```
$ idf.py build
Running cmake in directory /path/to/hello_world/build
Executing "cmake -G Ninja --warn-uninitialized /path/to/hello_world"...
Warn about uninitialized values.
-- Found Git: /usr/bin/git (found version "2.17.0")
-- Building empty aws_iot component due to configuration
-- Component names: ...
-- Component paths: ...

... (more lines of build system output)

[527/527] Generating hello_world.bin
esptool.py v2.3.1

Project build complete. To flash, run this command:
../../../components/esptool_py/esptool/esptool.py -p (PORT) -b 921600 write_flash -
↪-flash_mode dio --flash_size detect --flash_freq 40m 0x10000 build/hello_world.
↪bin  build 0x1000 build/bootloader/bootloader.bin 0x8000 build/partition_table/
↪partition-table.bin
or run 'idf.py -p PORT flash'
```

If there are no errors, the build will finish by generating the firmware binary .bin files.

1.13 Step 9. Flash onto the Device

Flash the binaries that you just built (bootloader.bin, partition-table.bin and hello_world.bin) onto your ESP32 board by running:

```
idf.py -p PORT [-b BAUD] flash
```

Replace PORT with your ESP32 board' s serial port name from *Step 6. Connect Your Device*.

You can also change the flasher baud rate by replacing BAUD with the baud rate you need. The default baud rate is `460800`.

For more information on idf.py arguments, see *idf.py*.

Note: The option `flash` automatically builds and flashes the project, so running `idf.py build` is not necessary.

1.13.1 Encountered Issues While Flashing?

If you run the given command and see errors such as "Failed to connect", there might be several reasons for this. One of the reasons might be issues encountered by `esptool.py`, the utility that is called by the build system to reset the chip, interact with the ROM bootloader, and flash firmware. One simple solution to try is manual reset described below, and if it does not help you can find more details about possible issues in Troubleshooting.

`esptool.py` resets ESP32 automatically by asserting DTR and RTS control lines of the USB to serial converter chip, i.e., FTDI or CP210x (for more information, see *Establish Serial Connection with ESP32*). The DTR and RTS control lines are in turn connected to `GPIO0` and `CHIP_PU` (EN) pins of ESP32, thus changes in the voltage levels of DTR and RTS will boot ESP32 into Firmware Download mode. As an example, check the schematic for the ESP32 DevKitC development board.

In general, you should have no problems with the official esp-idf development boards. However, `esptool.py` is not able to reset your hardware automatically in the following cases:

- Your hardware does not have the DTR and RTS lines connected to `GPIO0` and `CHIP_PU`
- The DTR and RTS lines are configured differently
- There are no such serial control lines at all

Depending on the kind of hardware you have, it may also be possible to manually put your ESP32 board into Firmware Download mode (reset).

- For development boards produced by Espressif, this information can be found in the respective getting started guides or user guides. For example, to manually reset an esp-idf development board, hold down the **Boot** button (GPIO0) and press the **EN** button (CHIP_PU).
- For other types of hardware, try pulling GPIO0 down.

1.13.2 Normal Operation

When flashing, you will see the output log similar to the following:

```
...
esptool.py --chip esp32 -p /dev/ttyUSB0 -b 460800 --before=default_reset --
↪after=hard_reset write_flash --flash_mode dio --flash_freq 40m --flash_size 2MB␣
↪0x8000 partition_table/partition-table.bin 0x1000 bootloader/bootloader.bin␣
↪0x10000 hello_world.bin
esptool.py v3.0-dev
Serial port /dev/ttyUSB0
Connecting........_
Chip is ESP32D0WDQ6 (revision 0)
Features: WiFi, BT, Dual Core, Coding Scheme None
Crystal is 40MHz
MAC: 24:0a:c4:05:b9:14
Uploading stub...
Running stub...
Stub running...
Changing baud rate to 460800
Changed.
Configuring flash size...
Compressed 3072 bytes to 103...
Writing at 0x00008000... (100 %)
Wrote 3072 bytes (103 compressed) at 0x00008000 in 0.0 seconds (effective 5962.8␣
↪kbit/s)...
Hash of data verified.
Compressed 26096 bytes to 15408...
Writing at 0x00001000... (100 %)
Wrote 26096 bytes (15408 compressed) at 0x00001000 in 0.4 seconds (effective 546.7␣
↪kbit/s)...
Hash of data verified.
Compressed 147104 bytes to 77364...
Writing at 0x00010000... (20 %)
Writing at 0x00014000... (40 %)
Writing at 0x00018000... (60 %)
Writing at 0x0001c000... (80 %)
Writing at 0x00020000... (100 %)
Wrote 147104 bytes (77364 compressed) at 0x00010000 in 1.9 seconds (effective 615.
↪5 kbit/s)...
Hash of data verified.

Leaving...
Hard resetting via RTS pin...
Done
```

If there are no issues by the end of the flash process, the board will reboot and start up the "hello_world" application.

If you'd like to use the Eclipse or VS Code IDE instead of running `idf.py`, check out the *Eclipse guide*, *VS Code guide*.

1.14 Step 10. Monitor

To check if "hello_world" is indeed running, type `idf.py -p PORT monitor` (Do not forget to replace PORT with your serial port name).

This command launches the *IDF Monitor* application:

```
$ idf.py -p /dev/ttyUSB0 monitor
Running idf_monitor in directory [...]/esp/hello_world/build
Executing "python [...]/esp-idf/tools/idf_monitor.py -b 115200 [...]/esp/hello_
↪world/build/hello_world.elf"...
--- idf_monitor on /dev/ttyUSB0 115200 ---
--- Quit: Ctrl+] | Menu: Ctrl+T | Help: Ctrl+T followed by Ctrl+H ---
ets Jun  8 2016 00:22:57

rst:0x1 (POWERON_RESET),boot:0x13 (SPI_FAST_FLASH_BOOT)
ets Jun  8 2016 00:22:57
...
```

After startup and diagnostic logs scroll up, you should see "Hello world!" printed out by the application.

```
...
Hello world!
Restarting in 10 seconds...
This is esp32 chip with 2 CPU core(s), WiFi/BT/BLE, silicon revision 1, 2MB␣
↪external flash
Minimum free heap size: 298968 bytes
Restarting in 9 seconds...
Restarting in 8 seconds...
Restarting in 7 seconds...
```

To exit IDF monitor use the shortcut `Ctrl+]`.

If IDF monitor fails shortly after the upload, or, if instead of the messages above, you see random garbage similar to what is given below, your board is likely using a 26 MHz crystal. Most development board designs use 40 MHz, so ESP-IDF uses this frequency as a default value.

```
e���)(Xn@�y.!��(�PW+)��Hn9a¯/9�!�t5��P�~�k��e�ea�5�jA
~zY��Y(1�,1 ��  e���)(Xn@�y.!Dr�zY(  jpi�|�+z5Ymvp
```

If you have such a problem, do the following:

1. Exit the monitor.
2. Go back to *menuconfig*.
3. Go to Component config –> ESP32-specific –> Main XTAL frequency, then change *CONFIG_ESP32_XTAL_FREQ_SEL* to 26 MHz.
4. After that, *build and flash* the application again.

Note: You can combine building, flashing and monitoring into one step by running:

```
idf.py -p PORT flash monitor
```

See also:

- *IDF Monitor* for handy shortcuts and more details on using IDF monitor.
- *idf.py* for a full reference of `idf.py` commands and options.

That's all that you need to get started with ESP32!

Now you are ready to try some other examples, or go straight to developing your own applications.

Important: Some of examples do not support ESP32 because required hardware is not included in ESP32 so it cannot be supported.

If building an example, please check the README file for the `Supported Targets` table. If this is present including ESP32 target, or the table does not exist at all, the example will work on ESP32.

1.15 Updating ESP-IDF

You should update ESP-IDF from time to time, as newer versions fix bugs and provide new features. The simplest way to do the update is to delete the existing `esp-idf` folder and clone it again, as if performing the initial installation described in *Step 2. Get ESP-IDF*.

Another solution is to update only what has changed. *The update procedure depends on the version of ESP-IDF you are using*.

After updating ESP-IDF, execute the Install script again, in case the new ESP-IDF version requires different versions of tools. See instructions at *Step 3. Set up the tools*.

Once the new tools are installed, update the environment using the Export script. See instructions at *Step 4. Set up the environment variables*.

1.16 Related Documents

1.16.1 Establish Serial Connection with ESP32

This section provides guidance how to establish serial connection between ESP32 and PC.

Connect ESP32 to PC

Connect the ESP32 board to the PC using the USB cable. If device driver does not install automatically, identify USB to serial converter chip on your ESP32 board (or external converter dongle), search for drivers in internet and install them.

Below is the list of USB to serial converter chips installed on most of the ESP32 boards produced by Espressif together with links to the drivers:

- CP210x: CP210x USB to UART Bridge VCP Drivers
- FTDI: FTDI Virtual COM Port Drivers

Please check the board user guide for specific USB to serial converter chip used. The drivers above are primarily for reference. Under normal circumstances, the drivers should be bundled with an operating system and automatically installed upon connecting the board to the PC.

Check port on Windows

Check the list of identified COM ports in the Windows Device Manager. Disconnect ESP32 and connect it back, to verify which port disappears from the list and then shows back again.

Figures below show serial port for ESP32 DevKitC and ESP32 WROVER KIT

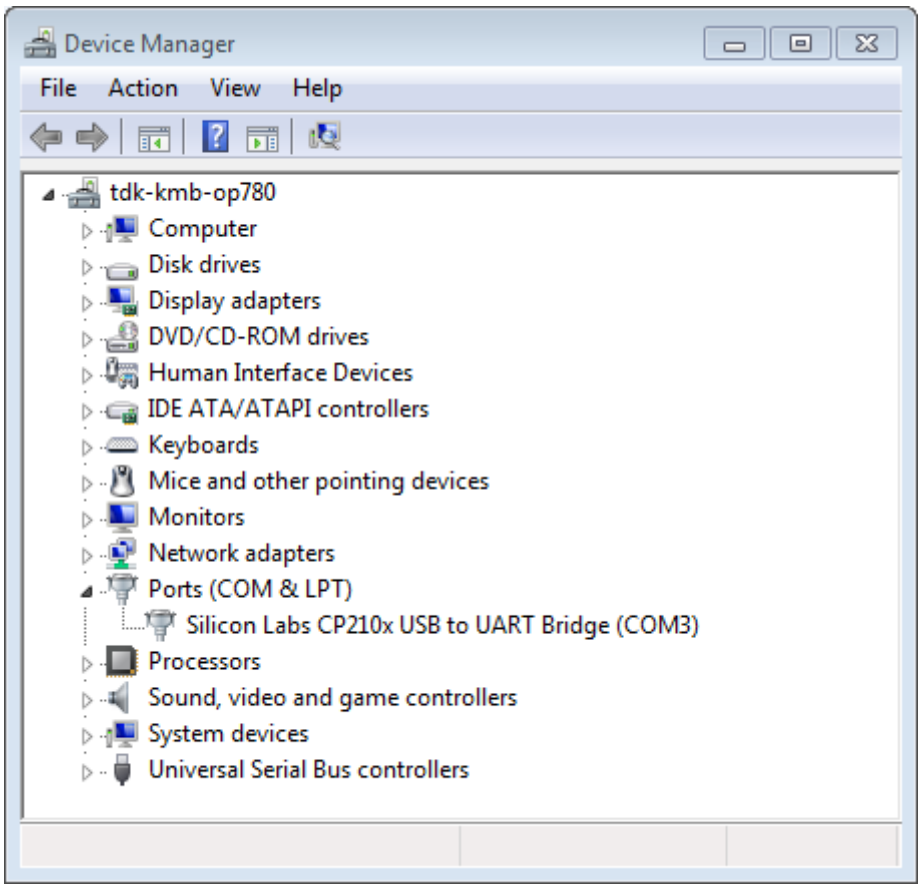

Fig. 58: USB to UART bridge of ESP32-DevKitC in Windows Device Manager

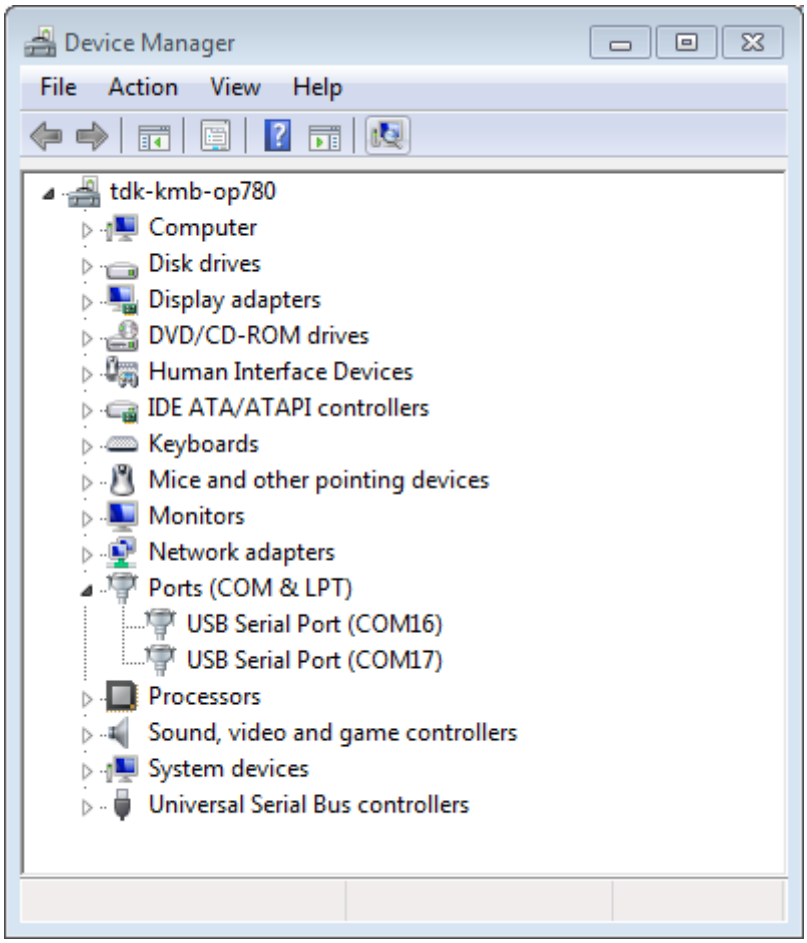

Fig. 59: Two USB Serial Ports of ESP-WROVER-KIT in Windows Device Manager

Check port on Linux and macOS

To check the device name for the serial port of your ESP32 board (or external converter dongle), run this command two times, first with the board / dongle unplugged, then with plugged in. The port which appears the second time is the one you need:

Linux

```
ls /dev/tty*
```

macOS

```
ls /dev/cu.*
```

Note: macOS users: if you don't see the serial port then check you have the USB/serial drivers installed as shown in the Getting Started guide for your particular development board. For macOS High Sierra (10.13), you may also have to explicitly allow the drivers to load. Open System Preferences -> Security & Privacy -> General and check if there is a message shown here about "System Software from developer ..." where the developer name is Silicon Labs or FTDI.

Adding user to `dialout` on Linux

The currently logged user should have read and write access the serial port over USB. On most Linux distributions, this is done by adding the user to `dialout` group with the following command:

```
sudo usermod -a -G dialout $USER
```

on Arch Linux this is done by adding the user to `uucp` group with the following command:

```
sudo usermod -a -G uucp $USER
```

Make sure you re-login to enable read and write permissions for the serial port.

Verify serial connection

Now verify that the serial connection is operational. You can do this using a serial terminal program by checking if you get any output on the terminal after reseting ESP32.

Windows and Linux In this example we will use PuTTY SSH Client that is available for both Windows and Linux. You can use other serial program and set communication parameters like below.

Run terminal, set identified serial port, baud rate = 115200, data bits = 8, stop bits = 1, and parity = N. Below are example screen shots of setting the port and such transmission parameters (in short described as 115200-8-1-N) on Windows and Linux. Remember to select exactly the same serial port you have identified in steps above.

Then open serial port in terminal and check, if you see any log printed out by ESP32. The log contents will depend on application loaded to ESP32, see *Example Output*.

Note: Close the serial terminal after verification that communication is working. If you keep the terminal session open, the serial port will be inaccessible for uploading firmware later.

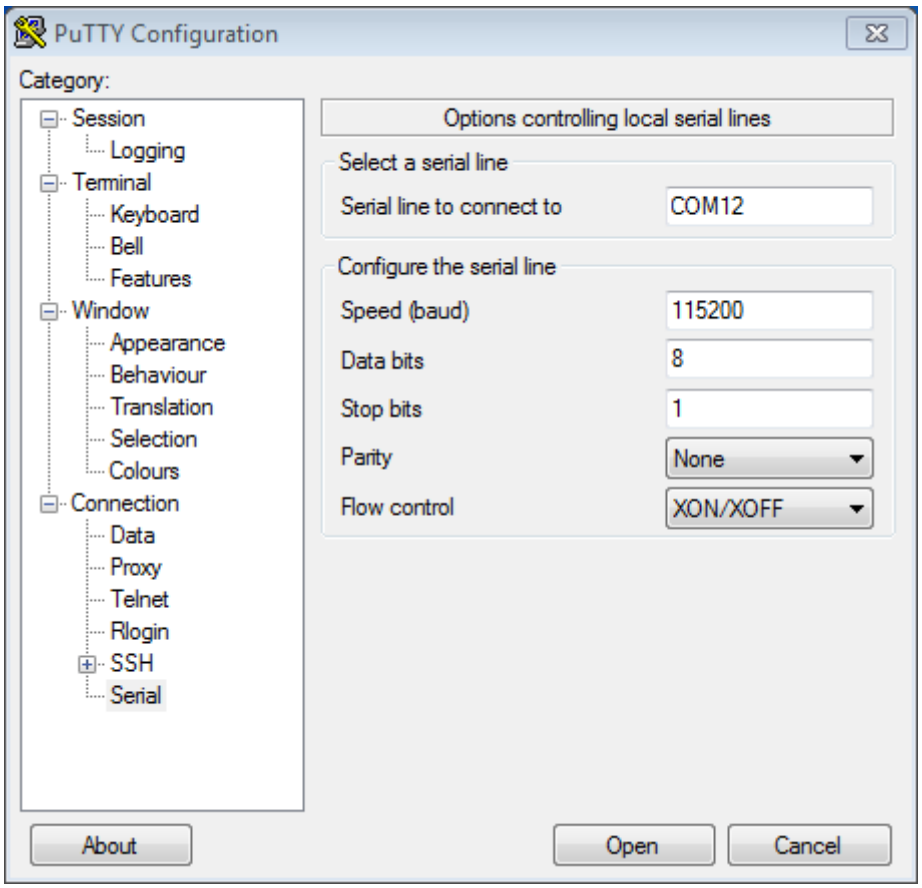

Fig. 60: Setting Serial Communication in PuTTY on Windows

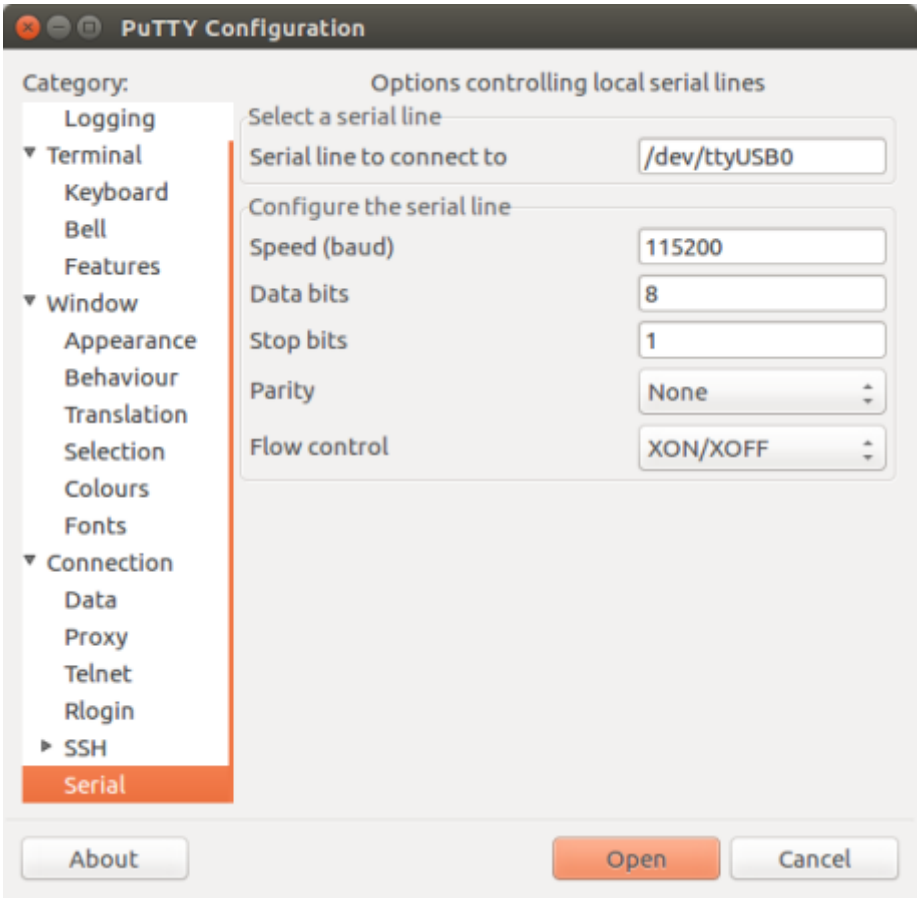

Fig. 61: Setting Serial Communication in PuTTY on Linux

macOS To spare you the trouble of installing a serial terminal program, macOS offers the **screen** command.

- As discussed in *Check port on Linux and macOS*, run:

```
ls /dev/cu.*
```

- You should see similar output:

```
/dev/cu.Bluetooth-Incoming-Port /dev/cu.SLAB_USBtoUART      /dev/cu.SLAB_
↪USBtoUART7
```

- The output will vary depending on the type and the number of boards connected to your PC. Then pick the device name of your board and run:

```
screen /dev/cu.device_name 115200
```

  Replace `device_name` with the name found running `ls /dev/cu.*`.
- What you are looking for is some log displayed by the **screen**. The log contents will depend on application loaded to ESP32, see *Example Output*. To exit the **screen** session type Ctrl-A + \ .

Note: Do not forget to **exit the screen session** after verifying that the communication is working. If you fail to do it and just close the terminal window, the serial port will be inaccessible for uploading firmware later.

Example Output An example log by ESP32 is shown below. Reset the board if you do not see anything.

```
ets Jun  8 2016 00:22:57

rst:0x5 (DEEPSLEEP_RESET),boot:0x13 (SPI_FAST_FLASH_BOOT)
ets Jun  8 2016 00:22:57

rst:0x7 (TG0WDT_SYS_RESET),boot:0x13 (SPI_FAST_FLASH_BOOT)
configsip: 0, SPIWP:0x00
clk_drv:0x00,q_drv:0x00,d_drv:0x00,cs0_drv:0x00,hd_drv:0x00,wp_drv:0x00
mode:DIO, clock div:2
load:0x3fff0008,len:8
load:0x3fff0010,len:3464
load:0x40078000,len:7828
load:0x40080000,len:252
entry 0x40080034
I (44) boot: ESP-IDF v2.0-rc1-401-gf9fba35 2nd stage bootloader
I (45) boot: compile time 18:48:10

...
```

If you can see readable log output, it means serial connection is working and you are ready to proceed with installation and finally upload of application to ESP32.

Note: For some serial port wiring configurations, the serial RTS & DTR pins need to be disabled in the terminal program before the ESP32 will boot and produce serial output. This depends on the hardware itself, most development boards (including all Espressif boards) *do not* have this issue. The issue is present if RTS & DTR are wired directly to the EN & GPIO0 pins. See the esptool documentation for more details.

If you got here from *Step 6. Connect Your Device* when installing s/w for ESP32 development, then you can continue with *Step 7. Configure*.

1.16.2 Build and Flash with Eclipse IDE

ESP-IDF V4.0 has a new CMake-based build system as the default build system.

There is a new ESP-IDF Eclipse Plugin that works with the CMake-based build system. Please refer to Espressif IDF Eclipse Plugins IDF for further instructions.

Note: In Espressif IDF Eclipse Plugins, though screenshots are captured from macOS, installation instructions are applicable for Windows, Linux and macOS.

If you require Eclipse IDE support for legacy ESP_IDF Make build system, you can follow the *legacy GNU Make build system Getting Started guide* which has steps for *Building and Flashing with Eclipse IDE*.

1.16.3 Getting Started with VS Code IDE

We have official support for VS Code and we aim to provide complete end to end support for all actions related to ESP-IDF namely build, flash, monitor, debug, tracing, core-dump, System Trace Viewer, etc.

Quick Install Guide

Recommended way to install ESP-IDF Visual Studio Code Extension is by downloading it from VS Code Marketplace or following Quick Installation Guide.

Review the *tutorials <https://github.com/espressif/vscode-esp-idf-extension/blob/master/docs/tutorial/toc.md>* for ESP-IDF Visual Studio Code Extension to learn how to use all features.

Supported Features

- **Setup**, will help you to quickly install ESP-IDF and its relevant toolchain with just few clicks.
- **Build**, with one click build and multi target build, you can easily build and deploy your applications.
- **Flash**, with both UART and JTAG flash out of the box.
- **Monitoring** comes with built-in terminal where you can trigger IDF Monitor Commands from within VS Code as you are used to in traditional terminals.
- *Debugging <https://github.com/espressif/vscode-esp-idf-extension/blob/master/docs/tutorial/debugging.md>*, with out of box hardware debugging and also support for postmortem debugging like core-dump, you can analyze the bugs with convenience.
- **GUI Menu Config**, provides with simplified UI for configuring your chip.
- **App & Heap Tracing**, provides support for collecting traces from your application and simplified UI for analyzing them.
- **System View Tracing Viewer**, aims to read and display the *.svdat* files into trace UI, we also support multiple core tracing views.
- **IDF Size Analysis Overview** presents an UI for binary size analysis.
- Rainmaker Cloud, we have inbuilt Rainmaker Cloud support where you can edit/read state of your connected IoT devices easily.
- **Code Coverage**, we have inbuilt code coverage support which shall highlight in color which line have been covered. We also render the existing HTML report directly inside the IDE.

Bugs & Feature Requests

If you face an issue with certain feature of VS Code or VS Code in general we recommend to ask your question in the forum, or open a github issue for our dev teams to review.

We also welcome new feature request, most of the features we have today is result of people asking it to implement, or improve certain aspect of the extension, raise your feature request on github.

1.16.4 IDF Monitor

The IDF monitor tool is mainly a serial terminal program which relays serial data to and from the target device's serial port. It also provides some IDF-specific features.

This tool can be launched from an IDF project by running `idf.py monitor`.

For the legacy GNU Make system, run `make monitor`.

Keyboard Shortcuts

For easy interaction with IDF Monitor, use the keyboard shortcuts given in the table.

Keyboard Shortcut	Action	Description
Ctrl+]	Exit the program	
Ctrl+T	Menu escape key	Press and follow it by one of the keys given below.
• Ctrl+T	Send the menu character itself to remote	
• Ctrl+]	Send the exit character itself to remote	
• Ctrl+P	Reset target into bootloader to pause app via RTS line	Resets the target, into bootloader via the RTS line (if connected), so that the board runs nothing. Useful when you need to wait for another device to startup.
• Ctrl+R	Reset target board via RTS	Resets the target board and re-starts the application via the RTS line (if connected).
• Ctrl+F	Build and flash the project	Pauses idf_monitor to run the project `flash` target, then resumes idf_monitor. Any changed source files are recompiled and then re-flashed. Target `encrypted-flash` is run if idf_monitor was started with argument `-E`.
• Ctrl+A (or A)	Build and flash the app only	Pauses idf_monitor to run the `app-flash` target, then resumes idf_monitor. Similar to the `flash` target, but only the main app is built and re-flashed. Target `encrypted-app-flash` is run if idf_monitor was started with argument `-E`.
• Ctrl+Y	Stop/resume log output printing on screen	Discards all incoming serial data while activated. Allows to quickly pause and examine log output without quitting the monitor.
• Ctrl+L	Stop/resume log output saved to file	Creates a file in the project directory and the output is written to that file until this is disabled with the same keyboard shortcut (or IDF Monitor exits).
• Ctrl+I (or I)	Stop/resume printing timestamps	IDF Monitor can print a timestamp in the beginning of each line. The timestamp format can be changed by the `--timestamp-format` command line argument.
• Ctrl+H (or H)	Display all keyboard shortcuts	
• Ctrl+X (or X)	Exit the program	
Ctrl+C	Interrupt running application	Pauses IDF monitor and run GDB project debugger to debug the application at runtime. This requires :ref:CONFIG_ESP_SYSTEM_GDBSTUB_RUNTIME option to be enabled.

Any keys pressed, other than `Ctrl-]` and `Ctrl-T`, will be sent through the serial port.

IDF-specific features

Automatic Address Decoding Whenever ESP-IDF outputs a hexadecimal code address of the form `0x4_____`, IDF Monitor uses addr2line to look up the location in the source code and find the function name.

If an ESP-IDF app crashes and panics, a register dump and backtrace is produced, such as the following:

```
Guru Meditation Error of type StoreProhibited occurred on core  0. Exception was␣
↪unhandled.
Register dump:
PC      : 0x400f360d  PS      : 0x00060330  A0      : 0x800dbf56  A1      :␣
↪0x3ffb7e00
A2      : 0x3ffb136c  A3      : 0x00000005  A4      : 0x00000000  A5      :␣
↪0x00000000
A6      : 0x00000000  A7      : 0x00000080  A8      : 0x00000000  A9      :␣
↪0x3ffb7dd0
A10     : 0x00000003  A11     : 0x00060f23  A12     : 0x00060f20  A13     :␣
↪0x3ffba6d0
A14     : 0x00000047  A15     : 0x0000000f  SAR     : 0x00000019  EXCCAUSE:␣
↪0x0000001d
EXCVADDR: 0x00000000  LBEG    : 0x4000c46c  LEND    : 0x4000c477  LCOUNT  :␣
↪0x00000000

Backtrace: 0x400f360d:0x3ffb7e00 0x400dbf56:0x3ffb7e20 0x400dbf5e:0x3ffb7e40␣
↪0x400dbf82:0x3ffb7e60 0x400d071d:0x3ffb7e90
```

IDF Monitor adds more details to the dump:

```
Guru Meditation Error of type StoreProhibited occurred on core  0. Exception was␣
↪unhandled.
Register dump:
PC      : 0x400f360d  PS      : 0x00060330  A0      : 0x800dbf56  A1      :␣
↪0x3ffb7e00
0x400f360d: do_something_to_crash at /home/gus/esp/32/idf/examples/get-started/
↪hello_world/main/./hello_world_main.c:57
(inlined by) inner_dont_crash at /home/gus/esp/32/idf/examples/get-started/hello_
↪world/main/./hello_world_main.c:52
A2      : 0x3ffb136c  A3      : 0x00000005  A4      : 0x00000000  A5      :␣
↪0x00000000
A6      : 0x00000000  A7      : 0x00000080  A8      : 0x00000000  A9      :␣
↪0x3ffb7dd0
A10     : 0x00000003  A11     : 0x00060f23  A12     : 0x00060f20  A13     :␣
↪0x3ffba6d0
A14     : 0x00000047  A15     : 0x0000000f  SAR     : 0x00000019  EXCCAUSE:␣
↪0x0000001d
EXCVADDR: 0x00000000  LBEG    : 0x4000c46c  LEND    : 0x4000c477  LCOUNT  :␣
↪0x00000000

Backtrace: 0x400f360d:0x3ffb7e00 0x400dbf56:0x3ffb7e20 0x400dbf5e:0x3ffb7e40␣
↪0x400dbf82:0x3ffb7e60 0x400d071d:0x3ffb7e90
0x400f360d: do_something_to_crash at /home/gus/esp/32/idf/examples/get-started/
↪hello_world/main/./hello_world_main.c:57
(inlined by) inner_dont_crash at /home/gus/esp/32/idf/examples/get-started/hello_
↪world/main/./hello_world_main.c:52
0x400dbf56: still_dont_crash at /home/gus/esp/32/idf/examples/get-started/hello_
↪world/main/./hello_world_main.c:47
0x400dbf5e: dont_crash at /home/gus/esp/32/idf/examples/get-started/hello_world/
↪main/./hello_world_main.c:42
0x400dbf82: app_main at /home/gus/esp/32/idf/examples/get-started/hello_world/main/
↪./hello_world_main.c:33
```

(continues on next page)

(continued from previous page)

```
0x400d071d: main_task at /home/gus/esp/32/idf/components/esp32/./cpu_start.c:254
```

To decode each address, IDF Monitor runs the following command in the background:

```
xtensa-esp32-elf-addr2line -pfiaC -e build/PROJECT.elf ADDRESS
```

Note: Set environment variable `ESP_MONITOR_DECODE` to `0` or call idf_monitor.py with specific command line option: `idf_monitor.py --disable-address-decoding` to disable address decoding.

Launching GDB with GDBStub By default, if esp-idf crashes, the panic handler prints relevant registers and the stack dump (similar to the ones above) over the serial port. Then it resets the board.

Furthermore, the application can be configured to run GDBStub in the background and handle the Ctrl+C event from the monitor.

Optionally, the panic handler can be configured to run GDBStub, the tool which can communicate with GDB project debugger. GDBStub allows to read memory, examine call stack frames and variables, etc. It is not as versatile as JTAG debugging, but this method does not require any special hardware.

To enable GDBStub on panic, open the project configuration menu (`idf.py menuconfig`) and set *CONFIG_ESP_SYSTEM_PANIC* to `GDBStub on panic` or set *CONFIG_ESP_SYSTEM_PANIC* to `GDBStub on runtime`.

In this case, if the panic handler or Ctrl+C command is triggered, as soon as IDF Monitor sees that GDBStub has loaded, it automatically pauses serial monitoring and runs GDB with necessary arguments. After GDB exits, the board is reset via the RTS serial line. If this line is not connected, please reset the board manually by pressing its Reset button.

In the background, IDF Monitor runs the following command:

```
xtensa-esp32-elf-gdb -ex "set serial baud BAUD" -ex "target remote PORT" -ex␣
↪interrupt build/PROJECT.elf :idf_target:`Hello NAME chip`
```

Output Filtering IDF monitor can be invoked as `idf.py monitor --print-filter="xyz"`, where `--print-filter` is the parameter for output filtering. The default value is an empty string, which means that everything is printed.

Restrictions on what to print can be specified as a series of `<tag>:<log_level>` items where `<tag>` is the tag string and `<log_level>` is a character from the set `{N, E, W, I, D, V, *}` referring to a level for *logging*.

For example, `PRINT_FILTER="tag1:W"` matches and prints only the outputs written with `ESP_LOGW("tag1", ...)` or at lower verbosity level, i.e. `ESP_LOGE("tag1", ...)`. Not specifying a `<log_level>` or using `*` defaults to Verbose level.

Note: Use primary logging to disable at compilation the outputs you do not need through the *logging library*. Output filtering with IDF monitor is a secondary solution which can be useful for adjusting the filtering options without recompiling the application.

Your app tags must not contain spaces, asterisks `*`, or colons `:` to be compatible with the output filtering feature.

If the last line of the output in your app is not followed by a carriage return, the output filtering might get confused, i.e., the monitor starts to print the line and later finds out that the line should not have been written. This is a known issue and can be avoided by always adding a carriage return (especially when no output follows immediately afterwards).

Examples Of Filtering Rules:

- `*` can be used to match any tags. However, the string `PRINT_FILTER="*:I tag1:E"` with regards to `tag1` prints errors only, because the rule for `tag1` has a higher priority over the rule for `*`.
- The default (empty) rule is equivalent to `*:V` because matching every tag at the Verbose level or lower means matching everything.
- `"*:N"` suppresses not only the outputs from logging functions, but also the prints made by `printf`, etc. To avoid this, use `*:E` or a higher verbosity level.
- Rules `"tag1:V"`, `"tag1:v"`, `"tag1:"`, `"tag1:*"`, and `"tag1"` are equivalent.
- Rule `"tag1:W tag1:E"` is equivalent to `"tag1:E"` because any consequent occurrence of the same tag name overwrites the previous one.
- Rule `"tag1:I tag2:W"` only prints `tag1` at the Info verbosity level or lower and `tag2` at the Warning verbosity level or lower.
- Rule `"tag1:I tag2:W tag3:N"` is essentially equivalent to the previous one because `tag3:N` specifies that `tag3` should not be printed.
- `tag3:N` in the rule `"tag1:I tag2:W tag3:N *:V"` is more meaningful because without `tag3:N` the `tag3` messages could have been printed; the errors for `tag1` and `tag2` will be printed at the specified (or lower) verbosity level and everything else will be printed by default.

A More Complex Filtering Example The following log snippet was acquired without any filtering options:

```
load:0x40078000,len:13564
entry 0x40078d4c
E (31) esp_image: image at 0x30000 has invalid magic byte
W (31) esp_image: image at 0x30000 has invalid SPI mode 255
E (39) boot: Factory app partition is not bootable
I (568) cpu_start: Pro cpu up.
I (569) heap_init: Initializing. RAM available for dynamic allocation:
I (603) cpu_start: Pro cpu start user code
D (309) light_driver: [light_init, 74]:status: 1, mode: 2
D (318) vfs: esp_vfs_register_fd_range is successful for range <54; 64) and VFS ID␣
↪1
I (328) wifi: wifi driver task: 3ffdbf84, prio:23, stack:4096, core=0
```

The captured output for the filtering options `PRINT_FILTER="wifi esp_image:E light_driver:I"` is given below:

```
E (31) esp_image: image at 0x30000 has invalid magic byte
I (328) wifi: wifi driver task: 3ffdbf84, prio:23, stack:4096, core=0
```

The options ``PRINT_FILTER="light_driver:D esp_image:N boot:N cpu_start:N vfs:N wifi:N *:V"` show the following output:

```
load:0x40078000,len:13564
entry 0x40078d4c
I (569) heap_init: Initializing. RAM available for dynamic allocation:
D (309) light_driver: [light_init, 74]:status: 1, mode: 2
```

Known Issues with IDF Monitor

Issues Observed on Windows

- Arrow keys, as well as some other keys, do not work in GDB due to Windows Console limitations.
- Occasionally, when "idf.py" or "make" exits, it might stall for up to 30 seconds before IDF Monitor resumes.
- When "gdb" is run, it might stall for a short time before it begins communicating with the GDBStub.

1.16.5 Customized Setup of Toolchain

Instead of downloading binary toolchain from Espressif website (see *Step 3. Set up the tools*) you may build the toolchain yourself.

If you can't think of a reason why you need to build it yourself, then probably it's better to stick with the binary version. However, here are some of the reasons why you might want to compile it from source:

- if you want to customize toolchain build configuration
- if you want to use a different GCC version (such as 4.8.5)
- if you want to hack gcc or newlib or libstdc++
- if you are curious and/or have time to spare
- if you don't trust binaries downloaded from the Internet

In any case, here are the instructions to compile the toolchain yourself.

Setup Windows Toolchain from Scratch

This is a step-by-step alternative to running the *ESP-IDF Tools Installer* for the CMake-based build system. Installing all of the tools by hand allows more control over the process, and also provides the information for advanced users to customize the install.

To quickly setup the toolchain and other tools in standard way, using the ESP-IDF Tools installer, proceed to section *Standard Setup of Toolchain for Windows*.

Note: The GNU Make based build system requires the MSYS2 Unix compatibility environment on Windows. The CMake-based build system does not require this environment.

Get ESP-IDF

Note: Previous versions of ESP-IDF used the **MSYS2 bash terminal** command line. The current cmake-based build system can run in the regular **Windows Command Prompt** which is used here.

If you use a bash-based terminal or PowerShell, please note that some command syntax will be different to what is shown below.

Open Command Prompt and run the following commands:

```
mkdir %userprofile%\esp
cd %userprofile%\esp
git clone -b v4.4.3 --recursive https://github.com/espressif/esp-idf.git
```

ESP-IDF will be downloaded into `%userprofile%\esp\esp-idf`.

Consult *ESP-IDF Versions* for information about which ESP-IDF version to use in a given situation.

Note: The `git clone` option `-b v4.4.3` tells git to clone the tag in the ESP-IDF repository `git clone` corresponding to this version of the documentation.

Note: As a fallback, it is also possible to download a zip file of this stable release from the Releases page. Do not download the "Source code" zip file(s) generated automatically by GitHub, they do not work with ESP-IDF.

Note: Do not miss the `--recursive` option. If you have already cloned ESP-IDF without this option, run another command to get all the submodules:

```
cd esp-idf
git submodule update --init
```

Tools

CMake Download the latest stable release of CMake for Windows and run the installer.

When the installer asks for Install Options, choose either "Add CMake to the system PATH for all users" or "Add CMake to the system PATH for the current user".

Ninja build

Note: Ninja currently only provides binaries for 64-bit Windows. It is possible to use CMake and `idf.py` with other build tools, such as mingw-make, on 32-bit windows. However this is currently undocumented.

Download the Ninja latest stable Windows release from the (download page).

The Ninja for Windows download is a .zip file containing a single `ninja.exe` file which needs to be unzipped to a directory which is then *added to your Path* (or you can choose a directory which is already on your Path).

Python Download the latest Python for Windows installer, and run it.

The "Customise" step of the Python installer gives a list of options. The last option is "Add python.exe to Path". Change this option to select "Will be installed".

Once Python is installed, open a Windows Command Prompt from the Start menu and run the following command:

```
pip install --user pyserial
```

Toolchain Setup Download the precompiled Windows toolchain:

https://dl.espressif.com/dl/xtensa-esp32-elf-gcc8_4_0-esp-2021r2-patch5-win32.zip

Unzip the zip file to `C:\Program Files` (or some other location). The zip file contains a single directory `xtensa-esp32-elf`.

Next, the `bin` subdirectory of this directory must be *added to your Path*. For example, the directory to add may be `C:\Program Files\xtensa-esp32-elf\bin`.

Note: If you already have the MSYS2 environment (for use with the "GNU Make" build system) installed, you can skip the separate download and add the directory `C:\msys32\opt\xtensa-esp32-elf\bin` to the Path instead, as the toolchain is included in the MSYS2 environment.

Adding Directory to Path To add any new directory to your Windows Path environment variable:

Open the System control panel and navigate to the Environment Variables dialog. (On Windows 10, this is found under Advanced System Settings).

Double-click the `Path` variable (either User or System Path, depending if you want other users to have this directory on their path.) Go to the end of the value, and append `;<new value>`.

Next Steps To carry on with development environment setup, proceed to *Step 3. Set up the tools*.

Setup Linux Toolchain from Scratch

The following instructions are alternative to downloading binary toolchain from Espressif website. To quickly setup the binary toolchain, instead of compiling it yourself, backup and proceed to section *Standard Setup of Toolchain for Linux*.

Note: The reason you might need to build your own toolchain is to solve the Y2K38 problem (time_t expand to 64 bits instead of 32 bits).

Install Prerequisites To compile with ESP-IDF you need to get the following packages:

- CentOS 7:

```
sudo yum -y update && sudo yum install git wget ncurses-devel flex bison gperf␣
↪python3 python3-pip cmake ninja-build ccache dfu-util libusbx
```

CentOS 7 is still supported but CentOS version 8 is recommended for a better user experience.

- Ubuntu and Debian:

```
sudo apt-get install git wget libncurses-dev flex bison gperf python3 python3-
↪pip python3-setuptools python3-serial python3-cryptography python3-future␣
↪python3-pyparsing python3-pyelftools cmake ninja-build ccache libffi-dev␣
↪libssl-dev dfu-util libusb-1.0-0
```

- Arch:

```
sudo pacman -Sy --needed gcc git make ncurses flex bison gperf python-pyserial␣
↪python-cryptography python-future python-pyparsing python-pyelftools cmake␣
↪ninja ccache dfu-util libusb
```

Note: CMake version 3.5 or newer is required for use with ESP-IDF. Older Linux distributions may require updating, enabling of a "backports" repository, or installing of a "cmake3" package rather than "cmake".

Compile the Toolchain from Source

- Install dependencies:
  - CentOS 7:

```
sudo yum install gawk gperf grep gettext ncurses-devel python3 python3-
↪devel automake bison flex texinfo help2man libtool make
```

  - Ubuntu pre-16.04:

```
sudo apt-get install gawk gperf grep gettext libncurses-dev python python-
↪dev automake bison flex texinfo help2man libtool make
```

  - Ubuntu 16.04 or newer:

```
sudo apt-get install gawk gperf grep gettext python python-dev automake␣
↪bison flex texinfo help2man libtool libtool-bin make
```

  - Debian 9:

```
sudo apt-get install gawk gperf grep gettext libncurses-dev python python-
↪dev automake bison flex texinfo help2man libtool libtool-bin make
```

  - Arch:

```
sudo pacman -Sy --needed python-pip
```

Create the working directory and go into it:

```
mkdir -p ~/esp
cd ~/esp
```

Download `crosstool-NG` and build it:

```
git clone https://github.com/espressif/crosstool-NG.git
cd crosstool-NG
git checkout esp-2021r2-patch5
git submodule update --init
./bootstrap && ./configure --enable-local && make
```

Note: To create a toolchain with support for 64-bit time_t, you need to remove the `--enable-newlib-long-time_t` option from the `crosstool-NG/samples/xtensa-esp32-elf/crosstool.config` file in 33 and 43 lines.

Build the toolchain:

```
./ct-ng xtensa-esp32-elf
./ct-ng build
chmod -R u+w builds/xtensa-esp32-elf
```

Toolchain will be built in `~/esp/crosstool-NG/builds/xtensa-esp32-elf`.

Add Toolchain to PATH The custom toolchain needs to be copied to a binary directory and added to the `PATH`. Choose a directory, for example `~/esp/xtensa-esp32-elf/`, and copy the build output to this directory.

To use it, you will need to update your `PATH` environment variable in `~/.profile` file. To make `xtensa-esp32-elf` available for all terminal sessions, add the following line to your `~/.profile` file:

```
export PATH="$HOME/esp/xtensa-esp32-elf/bin:$PATH"
```

Note: If you have `/bin/bash` set as login shell, and both `.bash_profile` and `.profile` exist, then update `.bash_profile` instead. In CentOS, `alias` should set in `.bashrc`.

Log off and log in back to make the `.profile` changes effective. Run the following command to verify if `PATH` is correctly set:

```
printenv PATH
```

You are looking for similar result containing toolchain's path at the beginning of displayed string:

```
$ printenv PATH
/home/user-name/esp/xtensa-esp32-elf/bin:/home/user-name/bin:/home/user-name/.
↪local/bin:/usr/local/sbin:/usr/local/bin:/usr/sbin:/usr/bin:/sbin:/bin:/usr/
↪games:/usr/local/games:/snap/bin
```

Instead of `/home/user-name` there should be a home path specific to your installation.

Next Steps To carry on with development environment setup, proceed to *Step 2. Get ESP-IDF*.

Setup Toolchain for Mac OS from Scratch

Package Manager To set up the toolchain from scratch, rather than *downloading a pre-compiled toolchain*, you will need to install either the MacPorts or Homebrew package manager.

MacPorts needs a full XCode installation, while Homebrew only needs XCode command line tools.

See *Customized Setup of Toolchain* section for some of the reasons why installing the toolchain from scratch may be necessary.

Install Prerequisites

- install pip:

```
sudo easy_install pip
```

- install pyserial:

```
pip install --user pyserial
```

- install CMake & Ninja build:
  - If you have Homebrew, you can run:

```
brew install cmake ninja dfu-util
```

  - If you have MacPorts, you can run:

```
sudo port install cmake ninja dfu-util
```

Compile the Toolchain from Source Install dependencies:

- with MacPorts:

```
sudo port install gsed gawk binutils gperf grep gettext wget libtool autoconf␣
↪automake make
```

- with Homebrew:

```
brew install gnu-sed gawk binutils gperftools gettext wget help2man libtool␣
↪autoconf automake make
```

Create a case-sensitive filesystem image:

```
hdiutil create ~/esp/crosstool.dmg -volname "ctng" -size 10g -fs "Case-sensitive␣
↪HFS+"
```

Mount it:

```
hdiutil mount ~/esp/crosstool.dmg
```

Create a symlink to your work directory:

```
mkdir -p ~/esp
ln -s /Volumes/ctng ~/esp/ctng-volume
```

Go into the newly created directory:

```
cd ~/esp/ctng-volume
```

Download `crosstool-NG` and build it:

```
git clone https://github.com/espressif/crosstool-NG.git
cd crosstool-NG
git checkout esp-2021r2-patch5
git submodule update --init
./bootstrap && ./configure --enable-local && make
```

Build the toolchain:

```
./ct-ng xtensa-esp32-elf
./ct-ng build
chmod -R u+w builds/xtensa-esp32-elf
```

Toolchain will be built in `~/esp/ctng-volume/crosstool-NG/builds/xtensa-esp32-elf`. To use it, you need to add `~/esp/ctng-volume/crosstool-NG/builds/xtensa-esp32-elf/bin` to `PATH` environment variable.

Next Steps To carry on with development environment setup, proceed to *Step 2. Get ESP-IDF*.

1.16.6 Get Started (Legacy GNU Make)

Note: Since ESP-IDF V4.0, the default build system is based on CMake. This documentation is for the legacy build system based on GNU Make. Support for this build system may be removed in future major releases.

This document is intended to help you set up the software development environment for the hardware based on Espressif ESP32.

After that, a simple example will show you how to use ESP-IDF (Espressif IoT Development Framework) for menu configuration, then for building and flashing firmware onto an ESP32 board.

Note: This is documentation for stable version v4.4.3 of ESP-IDF. Other *ESP-IDF Versions* are also available.

Introduction

ESP32 is a system on a chip that integrates the following features:

- Wi-Fi (2.4 GHz band)
- Bluetooth
- Dual high performance cores
- Ultra Low Power co-processor
- Several peripherals

Powered by 40 nm technology, ESP32 provides a robust, highly integrated platform, which helps meet the continuous demands for efficient power usage, compact design, security, high performance, and reliability.

Espressif provides basic hardware and software resources to help application developers realize their ideas using the ESP32 series hardware. The software development framework by Espressif is intended for development of Internet-of-Things (IoT) applications with Wi-Fi, Bluetooth, power management and several other system features.

What You Need

Hardware:

- An **ESP32** board
- **USB cable** - USB A / micro USB B
- **Computer** running Windows, Linux, or macOS

Software:

- **Toolchain** to build the **Application** for ESP32
- **ESP-IDF** that essentially contains API (software libraries and source code) for ESP32 and scripts to operate the **Toolchain**
- **Text editor** to write programs (**Projects**) in C, e.g., Eclipse

Development Board Overviews

If you have one of ESP32 development boards listed below, you can click on the link to learn more about its hardware.

Installation Step by Step

This is a detailed roadmap to walk you through the installation process.

Setting up Development Environment

- *Step 1. Set up the Toolchain* for *Windows*, *Linux* or *macOS*
- *Step 2. Get ESP-IDF*
- *Step 3. Set Environment Variables*
- *Step 4. Install the Required Python Packages*

Creating Your First Project

- *Step 5. Start a Project*
- *Step 6. Connect Your Device*
- *Step 7. Configure*
- *Step 8. Build and Flash*
- *Step 9. Monitor*

Step 1. Set up the Toolchain

The toolchain is a set of programs for compiling code and building applications.

The quickest way to start development with ESP32 is by installing a prebuilt toolchain. Pick up your OS below and follow the provided instructions.

Standard Setup of Toolchain for Windows (Legacy GNU Make)

Note: Since ESP-IDF V4.0, the default build system is based on CMake. This documentation is for the legacy build system based on GNU Make. Support for this build system may be removed in future major releases.

Introduction Windows doesn't have a built-in "make" environment, so as well as installing the toolchain you will need a GNU-compatible environment. We use the MSYS2 environment to provide this. You don't need to use this environment all the time (you can use *Eclipse* or some other front-end), but it runs behind the scenes.

Toolchain Setup The quick setup is to download the Windows all-in-one toolchain & MSYS2 zip file from dl.espressif.com:

https://dl.espressif.com/dl/esp32_win32_msys2_environment_and_esp2020r2_toolchain-20200601.zip

Unzip the zip file to `C:\` (or some other location, but this guide assumes `C:\`) and it will create an `msys32` directory with a pre-prepared environment.

Important: If another toolchain location is used (different than the default `C:\msys32`), please ensure that the path where the all-in-one toolchain gets unzipped is a plain ASCII, contains no spaces, symlinks or accents.

Check it Out Open a MSYS2 MINGW32 terminal window by running `C:\msys32\mingw32.exe`. The environment in this window is a bash shell. Create a directory named `esp` that is a default location to develop ESP32 applications. To do so, run the following shell command:

```
mkdir -p ~/esp
```

By typing `cd ~/esp` you can then move to the newly created directory. If there are no error messages you are done with this step.

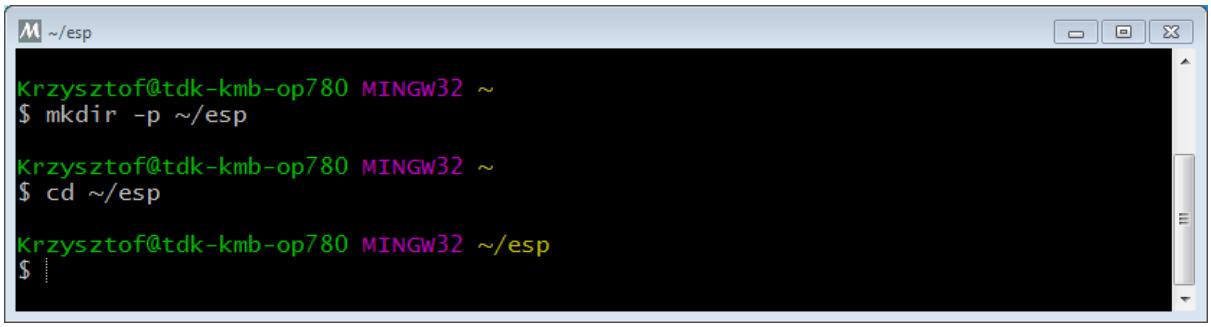

Fig. 62: MSYS2 MINGW32 shell window

Use this window in the following steps setting up development environment for ESP32.

Next Steps To carry on with development environment setup, proceed to section *Step 2. Get ESP-IDF*.

Updating The Environment When IDF is updated, sometimes new toolchains are required or new requirements are added to the Windows MSYS2 environment. To move any data from an old version of the precompiled environment to a new one:

- Take the old MSYS2 environment (ie `C:\msys32`) and move/rename it to a different directory (ie `C:\msys32_old`).
- Download the new precompiled environment using the steps above.
- Unzip the new MSYS2 environment to `C:\msys32` (or another location).
- Find the old `C:\msys32_old\home` directory and move this into `C:\msys32`.
- You can now delete the `C:\msys32_old` directory if you no longer need it.

You can have independent different MSYS2 environments on your system, as long as they are in different directories.

There are *also steps to update the existing environment without downloading a new one*, although this is more complex.

Related Documents

Setup Windows Toolchain from Scratch (Legacy GNU Make)

Note: Since ESP-IDF V4.0, the default build system is based on CMake. This documentation is for the legacy build system based on GNU Make. Support for this build system may be removed in future major releases.

Setting up the environment gives you some more control over the process, and also provides the information for advanced users to customize the install. The *pre-built environment*, addressed to less experienced users, has been prepared by following these steps.

To quickly setup the toolchain in standard way, using a prebuilt environment, proceed to section *Standard Setup of Toolchain for Windows (Legacy GNU Make)*.

Configure Toolchain & Environment from Scratch This process involves installing MSYS2, then installing the MSYS2 and Python packages which ESP-IDF uses, and finally downloading and installing the Xtensa toolchain.

- Navigate to the MSYS2 installer page and download the `msys2-i686-xxxxxxx.exe` installer executable (we only support a 32-bit MSYS environment, it works on both 32-bit and 64-bit Windows.) At time of writing, the latest installer is `msys2-i686-20161025.exe`.
- Run through the installer steps. **Uncheck the "Run MSYS2 32-bit now" checkbox at the end.**
- Once the installer exits, open Start Menu and find "MSYS2 MinGW 32-bit" to run the terminal. *(Why launch this different terminal? MSYS2 has the concept of different kinds of environments. The default "MSYS" environment is Cygwin-like and uses a translation layer for all Windows API calls. We need the "MinGW" environment in order to have a native Python which supports COM ports.)*
- The ESP-IDF repository on github contains a script in the tools directory titled `windows_install_prerequisites.sh`. If you haven't got a local copy of the ESP-IDF yet, that's OK - you can just download that one file in Raw format from here: tools/windows/windows_install_prerequisites.sh. Save it somewhere on your computer.
- Type the path to the shell script into the MSYS2 terminal window. You can type it as a normal Windows path, but use forward-slashes instead of back-slashes. ie: `C:/Users/myuser/Downloads/windows_install_prerequisites.sh`. You can read the script beforehand to check what it does.
- The `windows_install_prerequisites.sh` script will download and install packages for ESP-IDF support, and the ESP32 toolchain.

Troubleshooting

- While the install script runs, MSYS may update itself into a state where it can no longer operate. You may see errors like the following:

```
*** fatal error - cygheap base mismatch detected - 0x612E5408/0x612E4408. This␣
↪problem is probably due to using incompatible versions of the cygwin DLL.
```

  If you see errors like this, close the terminal window entirely (terminating the processes running there) and then re-open a new terminal. Re-run `windows_install_prerequisites.sh` (tip: use the up arrow key to see the last run command). The update process will resume after this step.
- MSYS2 is a "rolling" distribution so running the installer script may install newer packages than what is used in the prebuilt environments. If you see any errors that appear to be related to installing MSYS2 packages, please check the MSYS2-packages issues list for known issues. If you don't see any relevant issues, please raise an IDF issue.

MSYS2 Mirrors in China There are some (unofficial) MSYS2 mirrors inside China, which substantially improves download speeds inside China.

To add these mirrors, edit the following two MSYS2 mirrorlist files before running the setup script. The mirrorlist files can be found in the `/etc/pacman.d` directory (i.e. `c:\msys2\etc\pacman.d`).

Add these lines at the top of `mirrorlist.mingw32`:

```
Server = https://mirrors.ustc.edu.cn/msys2/mingw/i686/
Server = http://mirror.bit.edu.cn/msys2/REPOS/MINGW/i686
```

Add these lines at the top of `mirrorlist.msys`:

```
Server = http://mirrors.ustc.edu.cn/msys2/msys/$arch
Server = http://mirror.bit.edu.cn/msys2/REPOS/MSYS2/$arch
```

HTTP Proxy You can enable an HTTP proxy for MSYS and PIP downloads by setting the `http_proxy` variable in the terminal before running the setup script:

```
export http_proxy='http://http.proxy.server:PORT'
```

Or with credentials:

```
export http_proxy='http://user:password@http.proxy.server:PORT'
```

Add this line to `/etc/profile` in the MSYS directory in order to permanently enable the proxy when using MSYS.

Alternative Setup: Just download a toolchain If you already have an MSYS2 install or want to do things differently, you can download just the toolchain here:

https://dl.espressif.com/dl/xtensa-esp32-elf-gcc8_4_0-esp-2021r2-patch5-win32.zip

---

Note: If you followed instructions *Configure Toolchain & Environment from Scratch*, you already have the toolchain and you won't need this download.

Important: Just having this toolchain is *not enough* to use ESP-IDF on Windows. You will need GNU make, bash, and sed at minimum. The above environments provide all this, plus a host compiler (required for menuconfig support).

Next Steps To carry on with development environment setup, proceed to section *Step 2. Get ESP-IDF*.

Updating The Environment When IDF is updated, sometimes new toolchains are required or new system requirements are added to the Windows MSYS2 environment.

Rather than setting up a new environment, you can update an existing Windows environment & toolchain:

- Update IDF to the new version you want to use.
- Run the `tools/windows/windows_install_prerequisites.sh` script inside IDF. This will install any new software packages that weren't previously installed, and download and replace the toolchain with the latest version.

The script to update MSYS2 may also fail with the same errors mentioned under *Troubleshooting*.

If you need to support multiple IDF versions concurrently, you can have different independent MSYS2 environments in different directories. Alternatively you can download multiple toolchains and unzip these to different directories, then use the PATH environment variable to set which one is the default.

Standard Setup of Toolchain for Linux (Legacy GNU Make)

Note: Since ESP-IDF V4.0, the default build system is based on CMake. This documentation is for the legacy build system based on GNU Make. Support for this build system may be removed in future major releases.

Install Prerequisites To compile with ESP-IDF you need to get the following packages:

- CentOS 7:

```
sudo yum install gcc git wget make flex bison gperf python python2-cryptography
```

- Ubuntu and Debian:

```
sudo apt-get install gcc git wget make flex bison gperf python python-pip␣
↪python-setuptools python-serial python-cryptography python-future python-
↪pyparsing python-pyelftools libffi-dev libssl-dev
```

- Arch:

```
sudo pacman -S --needed gcc git make flex bison gperf python-pyserial python-
↪cryptography python-future python-pyparsing python-pyelftools
```

Note: Some older Linux distributions may be missing some of the Python packages listed above (or may use `pyserial` version 2.x which is not supported by ESP-IDF). It is possible to install these packages via `pip` instead - as described in section *Step 4. Install the Required Python Packages*.

Toolchain Setup ESP32 toolchain for Linux is available for download from Espressif website:

- for 64-bit Linux:
  https://dl.espressif.com/dl/xtensa-esp32-elf-gcc8_4_0-esp-2021r2-patch5-linux-amd64.tar.gz
- for 32-bit Linux:
  https://dl.espressif.com/dl/xtensa-esp32-elf-gcc8_4_0-esp-2021r2-patch5-linux-i686.tar.gz

1. Download this file, then extract it in `~/esp` directory:
   - for 64-bit Linux:

```
mkdir -p ~/esp
cd ~/esp
tar -xzf ~/Downloads/xtensa-esp32-elf-gcc8_4_0-esp-2021r2-patch5-linux-
↪amd64.tar.gz
```

   - for 32-bit Linux:

```
mkdir -p ~/esp
cd ~/esp
tar -xzf ~/Downloads/xtensa-esp32-elf-gcc8_4_0-esp-2021r2-patch5-linux-
↪i686.tar.gz
```

2. The toolchain will be extracted into `~/esp/xtensa-esp32-elf/` directory.
   To use it, you will need to update your `PATH` environment variable in `~/.profile` file. To make `xtensa-esp32-elf` available for all terminal sessions, add the following line to your `~/.profile` file:

```
export PATH="$HOME/esp/xtensa-esp32-elf/bin:$PATH"
```

   Alternatively, you may create an alias for the above command. This way you can get the toolchain only when you need it. To do this, add different line to your `~/.profile` file:

```
alias get_esp32='export PATH="$HOME/esp/xtensa-esp32-elf/bin:$PATH"'
```

   Then when you need the toolchain you can type `get_esp32` on the command line and the toolchain will be added to your `PATH`.

   Note: If you have `/bin/bash` set as login shell, and both `.bash_profile` and `.profile` exist, then update `.bash_profile` instead. In CentOS, `alias` should set in `.bashrc`.

   ---

3. Log off and log in back to make the `.profile` changes effective. Run the following command to verify if `PATH` is correctly set:

```
printenv PATH
```

You are looking for similar result containing toolchain's path at the beginning of displayed string:

```
$ printenv PATH
/home/user-name/esp/xtensa-esp32-elf/bin:/home/user-name/bin:/home/user-name/.
↪local/bin:/usr/local/sbin:/usr/local/bin:/usr/sbin:/usr/bin:/sbin:/bin:/usr/
↪games:/usr/local/games:/snap/bin
```

Instead of `/home/user-name` there should be a home path specific to your installation.

Permission issues /dev/ttyUSB0 With some Linux distributions you may get the `Failed to open port /dev/ttyUSB0` error message when flashing the ESP32. *This can be solved by adding the current user to the dialout group*.

Next Steps To carry on with development environment setup, proceed to section *Step 2. Get ESP-IDF*.

Related Documents

Setup Linux Toolchain from Scratch (Legacy GNU Make)

Note: Since ESP-IDF V4.0, the default build system is based on CMake. This documentation is for the legacy build system based on GNU Make. Support for this build system may be removed in future major releases.

Note: Standard process for installing the toolchain is described *here*. See *Customized Setup of Toolchain* section for some of the reasons why installing the toolchain from scratch may be necessary.

Install Prerequisites To compile with ESP-IDF you need to get the following packages:

- Ubuntu and Debian:

```
sudo apt-get install gcc git wget make libncurses-dev flex bison gperf python␣
↪python-pip python-setuptools python-serial python-cryptography python-future␣
↪python-pyparsing python-pyelftools libffi-dev libssl-dev
```

- Arch:

```
sudo pacman -S --needed gcc git make ncurses flex bison gperf python-pyserial␣
↪python-cryptography python-future python-pyparsing python-pyelftools
```

Note: Some older (pre-2014) Linux distributions may use `pyserial` version 2.x which is not supported by ESP-IDF. In this case please install a supported version via `pip` as it is described in section *Step 4. Install the Required Python Packages*.

Compile the Toolchain from Source

- Install dependencies:
  - CentOS 7:

```
sudo yum install gawk gperf grep gettext ncurses-devel python python-devel␣
↪automake bison flex texinfo help2man libtool
```

  - Ubuntu pre-16.04:

```
sudo apt-get install gawk gperf grep gettext libncurses-dev python python-
↪dev automake bison flex texinfo help2man libtool
```

– Ubuntu 16.04 or newer:

```
sudo apt-get install gawk gperf grep gettext python python-dev automake␣
↪bison flex texinfo help2man libtool libtool-bin
```

– Debian 9:

```
sudo apt-get install gawk gperf grep gettext libncurses-dev python python-
↪dev automake bison flex texinfo help2man libtool libtool-bin
```

– Arch:

```
TODO
```

Create the working directory and go into it:

```
mkdir -p ~/esp
cd ~/esp
```

Download `crosstool-NG` and build it:

```
git clone https://github.com/espressif/crosstool-NG.git
cd crosstool-NG
git checkout esp-2021r2-patch5
git submodule update --init
./bootstrap && ./configure --enable-local && make
```

Build the toolchain:

```
./ct-ng xtensa-esp32-elf
./ct-ng build
chmod -R u+w builds/xtensa-esp32-elf
```

Toolchain will be built in `~/esp/crosstool-NG/builds/xtensa-esp32-elf`. Follow *instructions for standard setup* to add the toolchain to your `PATH`.

Next Steps To carry on with development environment setup, proceed to section *Step 2. Get ESP-IDF*.

Standard Setup of Toolchain for Mac OS (Legacy GNU Make)

Note: Since ESP-IDF V4.0, the default build system is based on CMake. This documentation is for the legacy build system based on GNU Make. Support for this build system may be removed in future major releases.

Install Prerequisites

- install pip:

```
sudo easy_install pip
```

Note: `pip` will be used later for installing *the required Python packages*.

Toolchain Setup ESP32 toolchain for macOS is available for download from Espressif website:

https://dl.espressif.com/dl/xtensa-esp32-elf-gcc8_4_0-esp-2021r2-patch5-macos.tar.gz

Download this file, then extract it in `~/esp` directory:

```
mkdir -p ~/esp
cd ~/esp
tar -xzf ~/Downloads/xtensa-esp32-elf-gcc8_4_0-esp-2021r2-patch5-macos.tar.gz
```

The toolchain will be extracted into `~/esp/xtensa-esp32-elf/` directory.

To use it, you will need to update your `PATH` environment variable in `~/.profile` file. To make `xtensa-esp32-elf` available for all terminal sessions, add the following line to your `~/.profile` file:

```
export PATH=$HOME/esp/xtensa-esp32-elf/bin:$PATH
```

Alternatively, you may create an alias for the above command. This way you can get the toolchain only when you need it. To do this, add different line to your `~/.profile` file:

```
alias get_esp32="export PATH=$HOME/esp/xtensa-esp32-elf/bin:$PATH"
```

Then when you need the toolchain you can type `get_esp32` on the command line and the toolchain will be added to your `PATH`.

Next Steps To carry on with development environment setup, proceed to section *Step 2. Get ESP-IDF*.

Related Documents

Setup Toolchain for Mac OS from Scratch (Legacy GNU Make)

Note: Since ESP-IDF V4.0, the default build system is based on CMake. This documentation is for the legacy build system based on GNU Make. Support for this build system may be removed in future major releases.

Note: Standard process for installing the toolchain is described *here*. See *Customized Setup of Toolchain* section for some of the reasons why installing the toolchain from scratch may be necessary.

Install Prerequisites

- install pip:

```
sudo easy_install pip
```

Note: `pip` will be used later for installing *the required Python packages*.

Compile the Toolchain from Source

- Install dependencies:
  - Install either MacPorts or homebrew package manager. MacPorts needs a full XCode installation, while homebrew only needs XCode command line tools.
  - with MacPorts:

```
sudo port install gsed gawk binutils gperf grep gettext wget libtool␣
↪autoconf automake
```

– with homebrew:

```
brew install gnu-sed gawk binutils gperftools gettext wget help2man␣
↪libtool autoconf automake
```

Create a case-sensitive filesystem image:

```
hdiutil create ~/esp/crosstool.dmg -volname "ctng" -size 10g -fs "Case-sensitive␣
↪HFS+"
```

Mount it:

```
hdiutil mount ~/esp/crosstool.dmg
```

Create a symlink to your work directory:

```
mkdir -p ~/esp
ln -s /Volumes/ctng ~/esp/ctng-volume
```

Go into the newly created directory:

```
cd ~/esp/ctng-volume
```

Download `crosstool-NG` and build it:

```
git clone https://github.com/espressif/crosstool-NG.git
cd crosstool-NG
git checkout esp-2021r2-patch5
git submodule update --init
./bootstrap && ./configure --enable-local && make
```

Build the toolchain:

```
./ct-ng xtensa-esp32-elf
./ct-ng build
chmod -R u+w builds/xtensa-esp32-elf
```

Toolchain will be built in `~/esp/ctng-volume/crosstool-NG/builds/xtensa-esp32-elf`. Follow *instructions for standard setup* to add the toolchain to your `PATH`.

Next Steps To carry on with development environment setup, proceed to section *Step 2. Get ESP-IDF*.

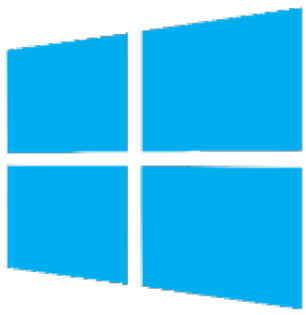		
Windows	Linux	macOS

Note: This guide uses the directory `~/esp` on Linux and macOS or `%userprofile%\esp` on Windows as an installation folder for ESP-IDF. You can use any directory, but you will need to adjust paths for the commands respectively. Keep in mind that ESP-IDF does not support spaces in paths.

Depending on your experience and preferences, you may want to customize your environment instead of using a prebuilt toolchain. To set up the system your own way go to Section *Customized Setup of Toolchain (Legacy GNU Make)*.

Step 2. Get ESP-IDF

Besides the toolchain, you also need ESP32-specific API (software libraries and source code). They are provided by Espressif in ESP-IDF repository.

To get a local copy of ESP-IDF, navigate to your installation directory and clone the repository with `git clone`.

Open Terminal, and run the following commands:

```
mkdir -p ~/esp
cd ~/esp
git clone -b v4.4.3 --recursive https://github.com/espressif/esp-idf.git
```

ESP-IDF will be downloaded into `~/esp/esp-idf`.

Consult *ESP-IDF Versions* for information about which ESP-IDF version to use in a given situation.

Note: The `git clone` option `-b v4.4.3` tells git to clone the tag in the ESP-IDF repository `git clone` corresponding to this version of the documentation.

Note: As a fallback, it is also possible to download a zip file of this stable release from the Releases page. Do not download the "Source code" zip file(s) generated automatically by GitHub, they do not work with ESP-IDF.

Note: Do not miss the `--recursive` option. If you have already cloned ESP-IDF without this option, run another command to get all the submodules:

```
cd esp-idf
git submodule update --init
```

Step 3. Set Environment Variables

The toolchain uses the environment variable `IDF_PATH` to access the ESP-IDF directory. This variable should be set up on your computer, otherwise projects will not build.

These variables can be set temporarily (per session) or permanently. Please follow the instructions specific to *Windows* , *Linux and macOS* in Section *Add IDF_PATH to User Profile (Legacy GNU Make)*.

Step 4. Install the Required Python Packages

The python packages required by ESP-IDF are located in `IDF_PATH/requirements.txt`. You can install them by running:

```
python -m pip install --user -r $IDF_PATH/requirements.txt
```

Note: Please check the version of the Python interpreter that you will be using with ESP-IDF. For this, run the command `python --version` and depending on the result, you might want to use `python3`, `python3.7` or similar instead of just `python`, e.g.:

```
python3 -m pip install --user -r $IDF_PATH/requirements.txt
```

Step 5. Start a Project

Now you are ready to prepare your application for ESP32. You can start with get-started/hello_world project from examples directory in IDF.

Copy get-started/hello_world to the `~/esp` directory:

Linux and macOS

```
cd ~/esp
cp -r $IDF_PATH/examples/get-started/hello_world .
```

Windows

```
cd %userprofile%\esp
xcopy /e /i %IDF_PATH%\examples\get-started\hello_world hello_world
```

There is a range of example projects in the examples directory in ESP-IDF. You can copy any project in the same way as presented above and run it.

It is also possible to build examples in-place, without copying them first.

Important: The esp-idf build system does not support spaces in the paths to either esp-idf or to projects.

Step 6. Connect Your Device

Now connect your ESP32 board to the computer and check under what serial port the board is visible.

Serial ports have the following patterns in their names:

- **Windows**: names like `COM1`
- **Linux**: starting with `/dev/tty`
- **macOS**: starting with `/dev/cu.`

If you are not sure how to check the serial port name, please refer to *Establish Serial Connection with ESP32 (Legacy GNU Make)* for full details.

Note: Keep the port name handy as you will need it in the next steps.

Step 7. Configure

Navigate to your `hello_world` directory from *Step 5. Start a Project* and run the project configuration utility `menuconfig`.

Linux and macOS

```
cd ~/esp/hello_world
make menuconfig
```

Windows

```
cd %userprofile%\esp\hello_world
make menuconfig
```

If the previous steps have been done correctly, the following menu appears:

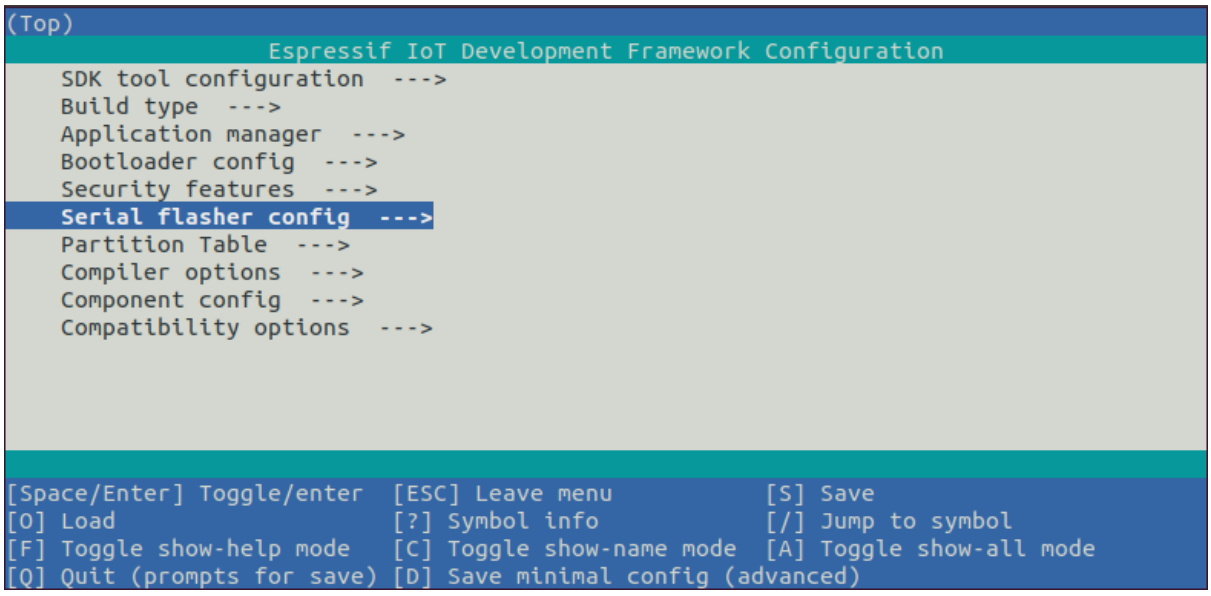

Fig. 63: Project configuration - Home window

In the menu, navigate to `Serial flasher config` > `Default serial port` to configure the serial port, where project will be loaded to. Confirm selection by pressing enter, save configuration by selecting `< Save >` and then exit `menuconfig` by selecting `< Exit >`.

To navigate and use `menuconfig`, press the following keys:

- Arrow keys for navigation
- `Enter` to go into a submenu
- `Esc` to go up one level or exit
- `?` to see a help screen. Enter key exits the help screen
- `Space`, or `Y` and `N` keys to enable (Yes) and disable (No) configuration items with checkboxes "`[*]`"
- `?` while highlighting a configuration item to display help about that item
- `/` to find configuration items

Attention: If you use ESP32-DevKitC board with the **ESP32-SOLO-1** module, enable single core mode (*CONFIG_FREERTOS_UNICORE*) in menuconfig before flashing examples.

Step 8. Build and Flash

Build and flash the project by running:

```
make flash
```

This command will compile the application and all ESP-IDF components, then it will generate the bootloader, partition table, and application binaries. After that, these binaries will be flashed onto your ESP32 board.

Encountered Issues While Flashing? If you run the given command and see errors such as "Failed to connect", there might be several reasons for this. One of the reasons might be issues encountered by `esptool.py`, the utility that is called by the build system to reset the chip, interact with the ROM bootloader, and flash firmware. One simple solution to try is manual reset described below, and if it does not help you can find more details about possible issues in Troubleshooting.

`esptool.py` resets ESP32 automatically by asserting DTR and RTS control lines of the USB to serial converter chip, i.e., FTDI or CP210x (for more information, see *Establish Serial Connection with ESP32 (Legacy GNU Make)*). The DTR and RTS control lines are in turn connected to `GPIO0` and `CHIP_PU` (EN) pins of ESP32, thus changes in the voltage levels of DTR and RTS will boot ESP32 into Firmware Download mode. As an example, check the schematic for ESP32-DevKitC development board.

In general, you should have no problems with the official esp-idf development boards. However, `esptool.py` is not able to reset your hardware automatically in the following cases:

- Your hardware does not have the DTR and RTS lines connected to `GPIO0` and `CHIP_PU`
- The DTR and RTS lines are configured differently
- There are no such serial control lines at all

Depending on the kind of hardware you have, it may also be possible to manually put your ESP32 board into Firmware Download mode (reset).

- For development boards produced by Espressif, this information can be found in the respective getting started guides or user guides. For example, to manually reset an esp-idf development board, hold down the **Boot** button (`GPIO0`) and press the **EN** button (`CHIP_PU`).
- For other types of hardware, try pulling `GPIO0` down.

Normal Operation If there are no issues by the end of the flash process, you will see the output log similar to the one given below. Then the board will reboot and start up the "hello_world" application.

```
esptool.py v3.0-dev
Flashing binaries to serial port /dev/ttyUSB0 (app at offset 0x10000)...
esptool.py v3.0-dev
Serial port /dev/cu.SLAB_USBtoUART
Connecting........____
Chip is ESP32D0WDQ6 (revision 1)
Features: WiFi, BT, Dual Core, Coding Scheme None
Crystal is 40MHz
MAC: 30:ae:a4:15:21:b4
Uploading stub...
Running stub...
Stub running...
Configuring flash size...
Auto-detected Flash size: 4MB
Flash params set to 0x0220
Compressed 26704 bytes to 15930...
Wrote 26704 bytes (15930 compressed) at 0x00001000 in 1.4 seconds (effective 151.9␣
↪kbit/s)...
Hash of data verified.
Compressed 147984 bytes to 77738...
Wrote 147984 bytes (77738 compressed) at 0x00010000 in 6.9 seconds (effective 172.
↪7 kbit/s)...
Hash of data verified.
Compressed 3072 bytes to 103...
Wrote 3072 bytes (103 compressed) at 0x00008000 in 0.0 seconds (effective 1607.9␣
↪kbit/s)...
Hash of data verified.

Leaving...
Hard resetting via RTS pin...
```

If you'd like to use the Eclipse IDE instead of running `make`, check out the *Eclipse guide*.

Step 9. Monitor

To check if "hello_world" is indeed running, type `make monitor`.

This command launches the *IDF Monitor* application:

```
$ make monitor
MONITOR
--- idf_monitor on /dev/ttyUSB0 115200 ---
--- Quit: Ctrl+] | Menu: Ctrl+T | Help: Ctrl+T followed by Ctrl+H ---
ets Jun  8 2016 00:22:57

rst:0x1 (POWERON_RESET),boot:0x13 (SPI_FAST_FLASH_BOOT)
ets Jun  8 2016 00:22:57
...
```

After startup and diagnostic logs scroll up, you should see "Hello world!" printed out by the application.

```
...
Hello world!
This is esp32 chip with 2 CPU cores, WiFi/BT/BLE, silicon revision 1, 4MB external␣
↪flash
Restarting in 10 seconds...
Restarting in 9 seconds...
Restarting in 8 seconds...
Restarting in 7 seconds...
```

To exit IDF monitor use the shortcut `Ctrl+]`.

If IDF monitor fails shortly after the upload, or if instead of the messages above you see a random garbage similar to what is given below, your board is likely using a 26MHz crystal. Most development board designs use 40MHz, so ESP-IDF uses this frequency as a default value.

```
e???)(Xn@?y.!??(?PW+)??Hn9a¯/9?!?t5??P?~?k??e?ea?5?jA
~zY??Y(1?,1 ?? e???)(Xn@?y.!Dr?zY(? jpi?|?+z5Ymvp
```

If you have such a problem, do the following:

1. Exit the monitor.
2. Go back to *menuconfig*.
3. Go to Component config –> ESP32-specific –> Main XTAL frequency, then change *CONFIG_ESP32_XTAL_FREQ_SEL* to 26MHz.
4. After that, *build and flash* the application again.

Note: You can combine building, flashing and monitoring into one step by running:

```
make flash monitor
```

See also *IDF Monitor* for handy shortcuts and more details on using IDF monitor.

That's all that you need to get started with ESP32!

Now you are ready to try some other examples, or go straight to developing your own applications.

Environment Variables

Some environment variables can be specified whilst calling `make` allowing users to **override arguments without the need to reconfigure them using** `make menuconfig`.

Variables	Description & Usage
ESP-PORT	Overrides the serial port used in `flash` and `monitor`. Examples: `make flash ESPPORT=/dev/ttyUSB1`, `make monitor ESPPORT=COM1`
ESP-BAUD	Overrides the serial baud rate when flashing the ESP32. Example: `make flash ESPBAUD=9600`
MON-ITOR-BAUD	Overrides the serial baud rate used when monitoring. Example: `make monitor MONITORBAUD=9600`

Note: You can export environment variables (e.g. `export ESPPORT=/dev/ttyUSB1`). All subsequent calls of `make` within the same terminal session will use the exported value given that the variable is not simultaneously overridden.

Updating ESP-IDF

You should update ESP-IDF from time to time, as newer versions fix bugs and provide new features. The simplest way to do the update is to delete the existing `esp-idf` folder and clone it again, as if performing the initial installation described in *Step 2. Get ESP-IDF*.

If downloading to a new path, remember to *Add IDF_PATH to User Profile (Legacy GNU Make)* so that the toolchain scripts can find ESP-IDF in its release specific location.

Another solution is to update only what has changed. *The update procedure depends on the version of ESP-IDF you are using*.

Related Documents

Add IDF_PATH to User Profile (Legacy GNU Make)

Note: Since ESP-IDF V4.0, the default build system is based on CMake. This documentation is for the legacy build system based on GNU Make. Support for this build system may be removed in future major releases.

To preserve setting of `IDF_PATH` environment variable between system restarts, add it to the user profile, following instructions below.

Windows The user profile scripts are contained in `C:/msys32/etc/profile.d/` directory. They are executed every time you open an MSYS2 window.

1. Create a new script file in `C:/msys32/etc/profile.d/` directory. Name it `export_idf_path.sh`.
2. Identify the path to ESP-IDF directory. It is specific to your system configuration and may look something like `C:\msys32\home\user-name\esp\esp-idf`
3. Add the `export` command to the script file, e.g.:

   ```
   export IDF_PATH="C:/msys32/home/user-name/esp/esp-idf"
   ```

   Remember to replace back-slashes with forward-slashes in the original Windows path.
4. Save the script file.
5. Close MSYS2 window and open it again. Check if `IDF_PATH` is set, by typing:

   ```
   printenv IDF_PATH
   ```

   The path previously entered in the script file should be printed out.

If you do not like to have `IDF_PATH` set up permanently in user profile, you should enter it manually on opening of an MSYS2 window:

```
export IDF_PATH="C:/msys32/home/user-name/esp/esp-idf"
```

If you got here from section *Step 3. Set Environment Variables*, while installing s/w for ESP32 development, then go back to section *Step 5. Start a Project*.

Linux and MacOS Set up `IDF_PATH` by adding the following line to `~/.profile` file:

```
export IDF_PATH=~/esp/esp-idf
```

Log off and log in back to make this change effective.

Note: If you have `/bin/bash` set as login shell, and both `.bash_profile` and `.profile` exist, then update `.bash_profile` instead.

Run the following command to check if `IDF_PATH` is set:

```
printenv IDF_PATH
```

The path previously entered in `~/.profile` file (or set manually) should be printed out.

If you do not like to have `IDF_PATH` set up permanently, you should enter it manually in terminal window on each restart or logout:

```
export IDF_PATH=~/esp/esp-idf
```

If you got here from section *Step 3. Set Environment Variables*, while installing s/w for ESP32 development, then go back to section *Step 5. Start a Project*.

Establish Serial Connection with ESP32 (Legacy GNU Make)

Note: Since ESP-IDF V4.0, the default build system is based on CMake. This documentation is for the legacy build system based on GNU Make. Support for this build system may be removed in future major releases.

This section provides guidance how to establish serial connection between ESP32 and PC.

Connect ESP32 to PC Connect the ESP32 board to the PC using the USB cable. If device driver does not install automatically, identify USB to serial converter chip on your ESP32 board (or external converter dongle), search for drivers in internet and install them.

Below are the links to drivers for ESP32 and other boards produced by Espressif:

Development Board	USB Driver	Remarks
ESP32-DevKitC	CP210x	
ESP32-LyraT	CP210x	
ESP32-LyraTD-MSC	CP210x	
ESP32-PICO-KIT	CP210x	
ESP-WROVER-KIT	FTDI	
ESP32 Demo Board	FTDI	
ESP-Prog	FTDI	Programmer board (w/o ESP32)
ESP32-MeshKit-Sense	n/a	Use with ESP-Prog
ESP32-Sense-Kit	n/a	Use with ESP-Prog

- CP210x: CP210x USB to UART Bridge VCP Drivers
- FTDI: FTDI Virtual COM Port Drivers

The drivers above are primarily for reference. Under normal circumstances, the drivers should be bundled with and operating system and automatically installed upon connecting one of the listed boards to the PC.

Check port on Windows Check the list of identified COM ports in the Windows Device Manager. Disconnect ESP32 and connect it back, to verify which port disappears from the list and then shows back again.

Figures below show serial port for ESP32 DevKitC and ESP32 WROVER KIT

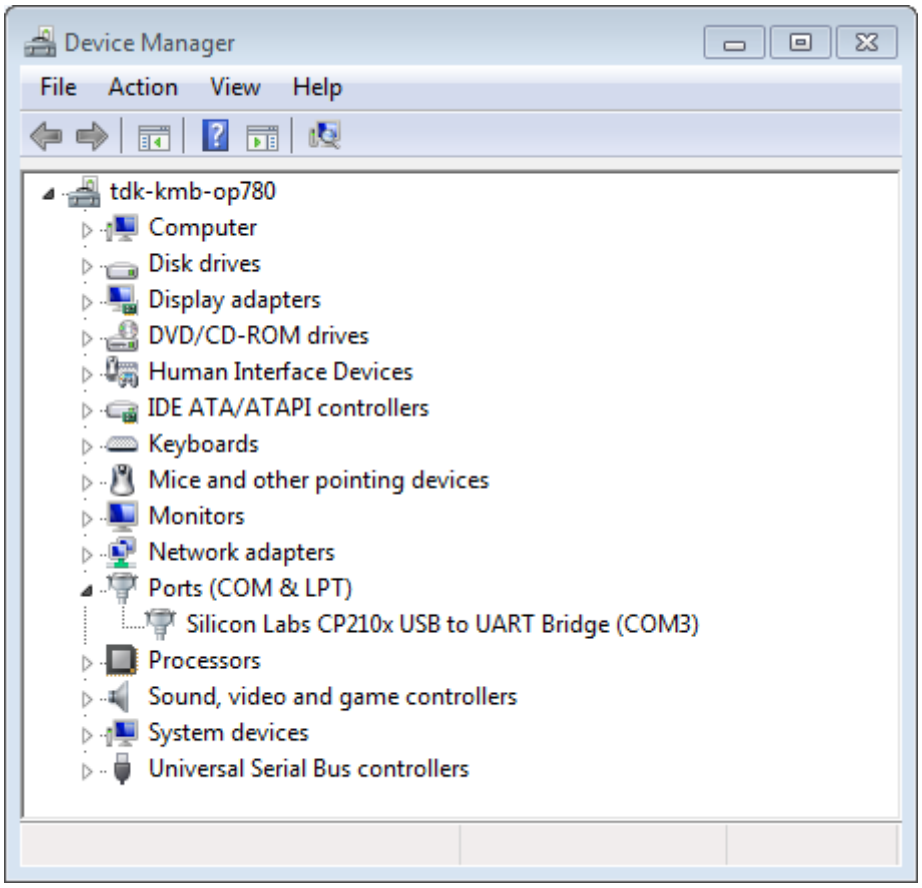

Fig. 64: USB to UART bridge of ESP32-DevKitC in Windows Device Manager

Check port on Linux and MacOS To check the device name for the serial port of your ESP32 board (or external converter dongle), run this command two times, first with the board / dongle unplugged, then with plugged in. The port which appears the second time is the one you need:

Linux

```
ls /dev/tty*
```

MacOS

```
ls /dev/cu.*
```

Adding user to `dialout` on Linux The currently logged user should have read and write access the serial port over USB. On most Linux distributions, this is done by adding the user to `dialout` group with the following command:

```
sudo usermod -a -G dialout $USER
```

on Arch Linux this is done by adding the user to `uucp` group with the following command:

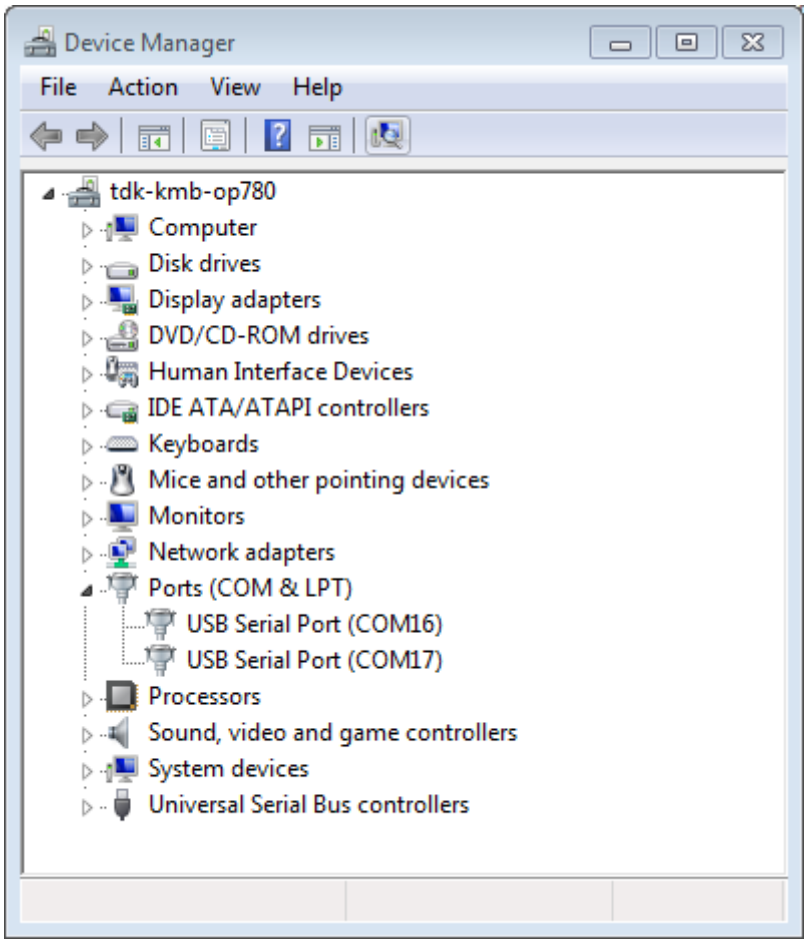

Fig. 65: Two USB Serial Ports of ESP-WROVER-KIT in Windows Device Manager

```
sudo usermod -a -G uucp $USER
```

Make sure you re-login to enable read and write permissions for the serial port.

Verify serial connection Now verify that the serial connection is operational. You can do this using a serial terminal program. In this example we will use PuTTY SSH Client that is available for both Windows and Linux. You can use other serial program and set communication parameters like below.

Run terminal, set identified serial port, baud rate = 115200, data bits = 8, stop bits = 1, and parity = N. Below are example screen shots of setting the port and such transmission parameters (in short described as 115200-8-1-N) on Windows and Linux. Remember to select exactly the same serial port you have identified in steps above.

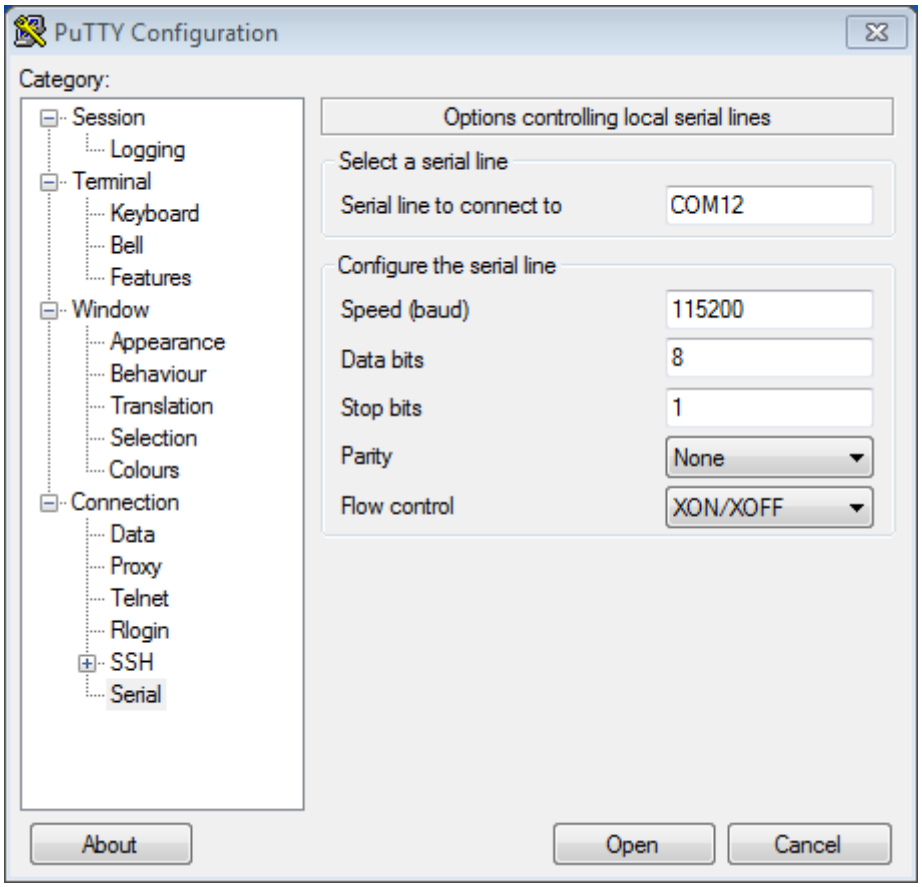

Fig. 66: Setting Serial Communication in PuTTY on Windows

Then open serial port in terminal and check, if you see any log printed out by ESP32. The log contents will depend on application loaded to ESP32. An example log by ESP32 is shown below.

```
ets Jun  8 2016 00:22:57

rst:0x5 (DEEPSLEEP_RESET),boot:0x13 (SPI_FAST_FLASH_BOOT)
ets Jun  8 2016 00:22:57

rst:0x7 (TG0WDT_SYS_RESET),boot:0x13 (SPI_FAST_FLASH_BOOT)
configsip: 0, SPIWP:0x00
clk_drv:0x00,q_drv:0x00,d_drv:0x00,cs0_drv:0x00,hd_drv:0x00,wp_drv:0x00
mode:DIO, clock div:2
load:0x3fff0008,len:8
load:0x3fff0010,len:3464
load:0x40078000,len:7828
load:0x40080000,len:252
```

(continues on next page)

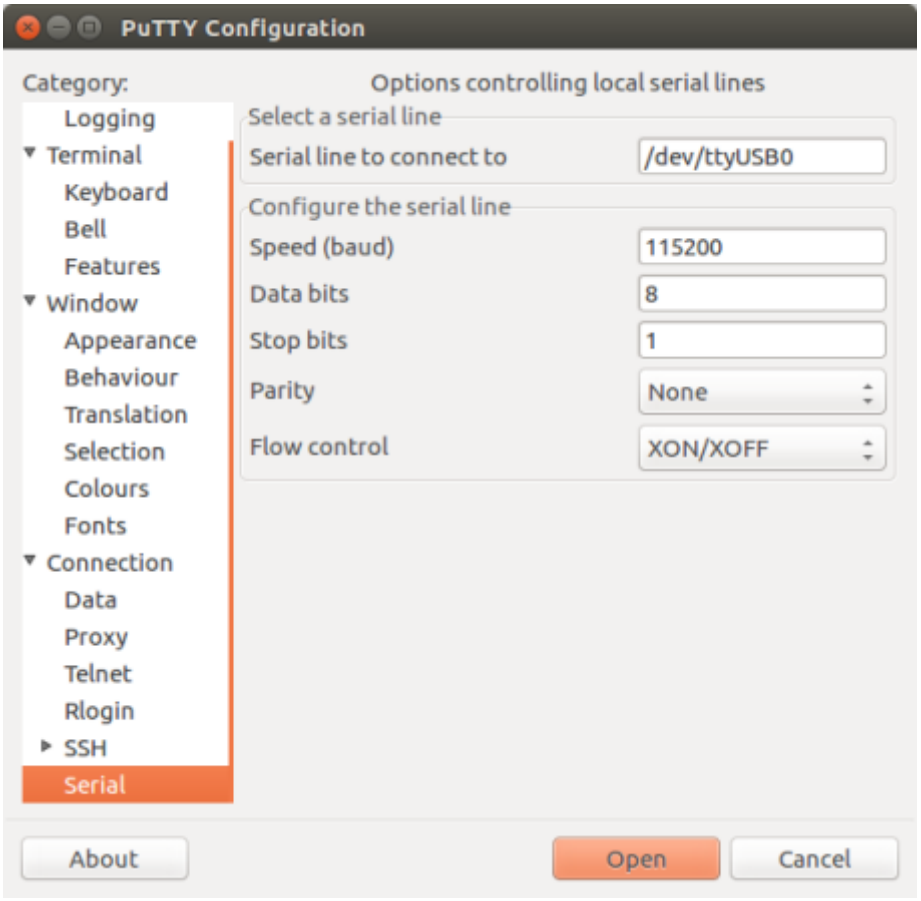

Fig. 67: Setting Serial Communication in PuTTY on Linux

(continued from previous page)

```
entry 0x40080034
I (44) boot: ESP-IDF v2.0-rc1-401-gf9fba35 2nd stage bootloader
I (45) boot: compile time 18:48:10

...
```

If you see some legible log, it means serial connection is working and you are ready to proceed with installation and finally upload of application to ESP32.

Note: For some serial port wiring configurations, the serial RTS & DTR pins need to be disabled in the terminal program before the ESP32 will boot and produce serial output. This depends on the hardware itself, most development boards (including all Espressif boards) *do not* have this issue. The issue is present if RTS & DTR are wired directly to the EN & GPIO0 pins. See the esptool documentation for more details.

Note: Close serial terminal after verification that communication is working. In next step we are going to use another application to upload ESP32. This application will not be able to access serial port while it is open in terminal.

If you got here from section *Step 6. Connect Your Device* when installing s/w for ESP32 development, then go back to section *Step 7. Configure*.

Build and Flash with Make (Legacy GNU Make)

Note: Since ESP-IDF V4.0, the default build system is based on CMake. This documentation is for the legacy build system based on GNU Make. Support for this build system may be removed in future major releases.

Finding a project As well as the esp-idf-template project, ESP-IDF comes with some example projects on github in the examples directory.

Once you ' ve found the project you want to work with, change to its directory and you can configure and build it.

Configuring your project

```
make menuconfig
```

Compiling your project

```
make all
```

…will compile app, bootloader and generate a partition table based on the config.

Flashing your project When `make all` finishes, it will print a command line to use esptool.py to flash the chip. However you can also do this from make by running:

```
make flash
```

This will flash the entire project (app, bootloader and partition table) to a new chip. Also if partition table has ota_data then this command will flash a initial ota_data. It allows to run the newly loaded app from a factory partition (or the first OTA partition, if factory partition is not present). The settings for serial port flashing can be configured with *make menuconfig*.

You don ' t need to run `make all` before running `make flash`, `make flash` will automatically rebuild anything which needs it.

Compiling & Flashing Just the App After the initial flash, you may just want to build and flash just your app, not the bootloader and partition table:

- `make app` - build just the app.
- `make app-flash` - flash just the app.

`make app-flash` will automatically rebuild the app if it needs it.

There's no downside to reflashing the bootloader and partition table each time, if they haven't changed.

The Partition Table Once you've compiled your project, the "build" directory will contain a binary file with a name like "my_app.bin". This is an ESP32 image binary that can be loaded by the bootloader.

A single ESP32's flash can contain multiple apps, as well as many kinds of data (calibration data, filesystems, parameter storage, etc). For this reason, a partition table is flashed to offset 0x8000 in the flash.

Each entry in the partition table has a name (label), type (app, data, or something else), subtype and the offset in flash where the partition is loaded.

The simplest way to use the partition table is to *make menuconfig* and choose one of the simple predefined partition tables:

- "Single factory app, no OTA"
- "Factory app, two OTA definitions"

In both cases the factory app is flashed at offset 0x10000. If you *make partition_table* then it will print a summary of the partition table.

For more details about *partition tables* and how to create custom variations, view the *documentation*.

Build and Flash with Eclipse IDE (Legacy GNU Make)

Note: Since ESP-IDF V4.0, the default build system is based on CMake. This documentation is for the legacy build system based on GNU Make. Support for this build system may be removed in future major releases.

Installing Eclipse IDE The Eclipse IDE gives you a graphical integrated development environment for writing, compiling and debugging ESP-IDF projects.

- Start by installing the esp-idf for your platform (see files in this directory with steps for Windows, OS X, Linux).
- We suggest building a project from the command line first, to get a feel for how that process works. You also need to use the command line to configure your esp-idf project (via `make menuconfig`), this is not currently supported inside Eclipse.
- Download the Eclipse Installer for your platform from eclipse.org.
- When running the Eclipse Installer, choose "Eclipse for C/C++ Development" (in other places you'll see this referred to as CDT.)

Setting up Eclipse Once your new Eclipse installation launches, follow these steps:

Import New Project

- Eclipse makes use of the Makefile support in ESP-IDF. This means you need to start by creating an ESP-IDF project. You can use the idf-template project from github, or open one of the examples in the esp-idf examples subdirectory.
- Once Eclipse is running, choose File -> Import···
- In the dialog that pops up, choose "C/C++" -> "Existing Code as Makefile Project" and click Next.
- On the next page, enter "Existing Code Location" to be the directory of your IDF project. Don't specify the path to the ESP-IDF directory itself (that comes later). The directory you specify should contain a file named "Makefile" (the project Makefile).
- On the same page, under "Toolchain for Indexer Settings" choose "Cross GCC". Then click Finish.

Project Properties

- The new project will appear under Project Explorer. Right-click the project and choose Properties from the context menu.
- Click on the "Environment" properties page under "C/C++ Build". Click "Add···" and enter name `BATCH_BUILD` and value `1`.
- Click "Add···" again, and enter name `IDF_PATH`. The value should be the full path where ESP-IDF is installed. Windows users can copy the `IDF_PATH` from windows explorer.
- Edit the `PATH` environment variable. Keep the current value, and append the path to the Xtensa toolchain installed as part of IDF setup, if this is not already listed on the PATH. A typical path to the toolchain looks like `/home/user-name/esp/xtensa-esp32-elf/bin`. Note that you need to add a colon `:` before the appended path. Windows users will need to prepend `C:\msys32\mingw32\bin;C:\msys32\opt\xtensa-esp32-elf\bin;C:\msys32\usr\bin` to `PATH` environment variable (If you installed msys32 to a different directory then you'll need to change these paths to match).
- On macOS, add a `PYTHONPATH` environment variable and set it to `/Library/Frameworks/Python.framework/Versions/2.7/lib/python2.7/site-packages`. This is so that the system Python, which has pyserial installed as part of the setup steps, overrides any built-in Eclipse Python.

ADDITIONAL NOTE: If either the IDF_PATH directory or the project directory is located outside `C:\msys32\home` directory, you will have to give custom build command in C/C++ Build properties as: `python ${IDF_PATH}/tools/windows/eclipse_make.py` (Please note that the build time may get significantly increased by this method.)

Navigate to "C/C++ General" -> "Preprocessor Include Paths" property page:

- Click the "Providers" tab
- In the list of providers, click "CDT Cross GCC Built-in Compiler Settings". Change "Command to get compiler specs" to `xtensa-esp32-elf-gcc ${FLAGS} -std=c++11 -E -P -v -dD "${INPUTS}"`.
- In the list of providers, click "CDT GCC Build Output Parser" and change the "Compiler command pattern" to `xtensa-esp32-elf-(gcc|g\+\+|c\+\+|cc|cpp|clang)`

Navigate to "C/C++ General" -> "Indexer" property page:

- Check "Enable project specific settings" to enable the rest of the settings on this page.
- Uncheck "Allow heuristic resolution of includes". When this option is enabled Eclipse sometimes fails to find correct header directories.

Navigate to "C/C++ Build" -> "Behavior" property page:

- Check "Enable parallel build" to enable multiple build jobs in parallel.

Building in Eclipse Before your project is first built, Eclipse may show a lot of errors and warnings about undefined values. This is because some source files are automatically generated as part of the esp-idf build process. These errors and warnings will go away after you build the project.

- Click OK to close the Properties dialog in Eclipse.
- Outside Eclipse, open a command line prompt. Navigate to your project directory, and run `make menuconfig` to configure your project's esp-idf settings. This step currently has to be run outside Eclipse.

If you try to build without running a configuration step first, esp-idf will prompt for configuration on the command line - but Eclipse is not able to deal with this, so the build will hang or fail.

- Back in Eclipse, choose Project -> Build to build your project.

TIP: If your project had already been built outside Eclipse, you may need to do a Project -> Clean before choosing Project -> Build. This is so Eclipse can see the compiler arguments for all source files. It uses these to determine the header include paths.

Flash from Eclipse You can integrate the "make flash" target into your Eclipse project to flash using esptool.py from the Eclipse UI:

- Right-click your project in Project Explorer (important to make sure you select the project, not a directory in the project, or Eclipse may find the wrong Makefile.)
- Select Build Targets -> Create…from the context menu.
- Type "flash" as the target name. Leave the other options as their defaults.
- Now you can use Project -> Build Target -> Build (Shift+F9) to build the custom flash target, which will compile and flash the project.

Note that you will need to use "make menuconfig" to set the serial port and other config options for flashing. "make menuconfig" still requires a command line terminal (see the instructions for your platform.)

Follow the same steps to add `bootloader` and `partition_table` targets, if necessary.

Customized Setup of Toolchain (Legacy GNU Make) Instead of downloading binary toolchain from Espressif website (see *Step 1. Set up the Toolchain*) you may build the toolchain yourself.

Note: Since ESP-IDF V4.0, the default build system is based on CMake. This documentation is for the legacy build system based on GNU Make. Support for this build system may be removed in future major releases.

If you can't think of a reason why you need to build it yourself, then probably it's better to stick with the binary version. However, here are some of the reasons why you might want to compile it from source:

- if you want to customize toolchain build configuration
- if you want to use a different GCC version (such as 4.8.5)
- if you want to hack gcc or newlib or libstdc++
- if you are curious and/or have time to spare
- if you don't trust binaries downloaded from the Internet

In any case, here are the instructions to compile the toolchain yourself.

Chapter 2

API Reference

2.1 Bluetooth API

2.1.1 Controller && VHCI

Application Example

Check bluetooth/hci folder in ESP-IDF examples, which contains the following application:

- This is a BLE advertising demo with virtual HCI interface. Send Reset/ADV_PARAM/ADV_DATA/ADV_ENABLE HCI command for BLE advertising - bluetooth/hci/controller_vhci_ble_adv.

API Reference

Header File

- components/bt/include/esp32/include/esp_bt.h

Functions

esp_err_t **esp_ble_tx_power_set**(*esp_ble_power_type_t* power_type, *esp_power_level_t* power_level)

Set BLE TX power Connection Tx power should only be set after connection created.

Parameters

- **power_type** –: The type of which tx power, could set Advertising/Connection/Default and etc
- **power_level** –Power level(index) corresponding to absolute value(dbm)

Returns ESP_OK - success, other - failed

esp_power_level_t **esp_ble_tx_power_get**(*esp_ble_power_type_t* power_type)

Get BLE TX power Connection Tx power should only be get after connection created.

Parameters **power_type** –: The type of which tx power, could set Advertising/Connection/Default and etc

Returns >= 0 - Power level, < 0 - Invalid

esp_err_t **esp_bredr_tx_power_set** (*esp_power_level_t* min_power_level, *esp_power_level_t* max_power_level)

Set BR/EDR TX power BR/EDR power control will use the power in range of minimum value and maximum value. The power level will effect the global BR/EDR TX power, such inquire, page, connection and so on. Please call the function after esp_bt_controller_enable and before any function which cause RF do TX. So you can call the function before doing discovery, profile init and so on. For example, if you want BR/EDR use the new TX power to do inquire, you should call this function before inquire. Another word, If call this function when BR/EDR is in inquire(ING), please do inquire again after call this function. Default minimum power level is ESP_PWR_LVL_N0, and maximum power level is ESP_PWR_LVL_P3.

Parameters
- **min_power_level** –The minimum power level
- **max_power_level** –The maximum power level

Returns ESP_OK - success, other - failed

esp_err_t **esp_bredr_tx_power_get** (*esp_power_level_t* *min_power_level, *esp_power_level_t* *max_power_level)

Get BR/EDR TX power If the argument is not NULL, then store the corresponding value.

Parameters
- **min_power_level** –The minimum power level
- **max_power_level** –The maximum power level

Returns ESP_OK - success, other - failed

esp_err_t **esp_bredr_sco_datapath_set** (*esp_sco_data_path_t* data_path)

Set default SCO data path Should be called after controller is enabled, and before (e)SCO link is established.

Parameters **data_path** –SCO data path

Returns ESP_OK - success, other - failed

esp_err_t **esp_bt_controller_init** (*esp_bt_controller_config_t* *cfg)

Initialize BT controller to allocate task and other resource. This function should be called only once, before any other BT functions are called.

Parameters **cfg** –Initial configuration of BT controller. Different from previous version, there's a mode and some connection configuration in "cfg" to configure controller work mode and allocate the resource which is needed.

Returns ESP_OK - success, other - failed

esp_err_t **esp_bt_controller_deinit** (void)

De-initialize BT controller to free resource and delete task. You should stop advertising and scanning, as well as disconnect all existing connections before de-initializing BT controller.

This function should be called only once, after any other BT functions are called.

Returns ESP_OK - success, other - failed

esp_err_t **esp_bt_controller_enable** (*esp_bt_mode_t* mode)

Enable BT controller. Due to a known issue, you cannot call esp_bt_controller_enable() a second time to change the controller mode dynamically. To change controller mode, call esp_bt_controller_disable() and then call esp_bt_controller_enable() with the new mode.

Parameters **mode** –: the mode(BLE/BT/BTDM) to enable. For compatible of API, retain this argument. This mode must be equal as the mode in "cfg" of esp_bt_controller_init().

Returns ESP_OK - success, other - failed

esp_err_t **esp_bt_controller_disable** (void)

Disable BT controller.

Returns ESP_OK - success, other - failed

esp_bt_controller_status_t **esp_bt_controller_get_status** (void)

Get BT controller is initialised/de-initialised/enabled/disabled.

Returns status value

bool **esp_vhci_host_check_send_available**(void)

esp_vhci_host_check_send_available used for check actively if the host can send packet to controller or not.

Returns true for ready to send, false means cannot send packet

void **esp_vhci_host_send_packet**(uint8_t *data, uint16_t len)

esp_vhci_host_send_packet host send packet to controller

Should not call this function from within a critical section or when the scheduler is suspended.

Parameters

- **data** –the packet point
- **len** –the packet length

esp_err_t **esp_vhci_host_register_callback**(const *esp_vhci_host_callback_t* *callback)

esp_vhci_host_register_callback register the vhci reference callback struct defined by vhci_host_callback structure.

Parameters **callback** –*esp_vhci_host_callback* type variable
Returns ESP_OK - success, ESP_FAIL - failed

esp_err_t **esp_bt_controller_mem_release**(*esp_bt_mode_t* mode)

esp_bt_controller_mem_release release the controller memory as per the mode

This function releases the BSS, data and other sections of the controller to heap. The total size is about 70k bytes.

esp_bt_controller_mem_release(mode) should be called only before esp_bt_controller_init() or after esp_bt_controller_deinit().

Note that once BT controller memory is released, the process cannot be reversed. It means you cannot use the bluetooth mode which you have released by this function.

If your firmware will later upgrade the Bluetooth controller mode (BLE -> BT Classic or disabled -> enabled) then do not call this function.

If the app calls esp_bt_controller_enable(ESP_BT_MODE_BLE) to use BLE only then it is safe to call esp_bt_controller_mem_release(ESP_BT_MODE_CLASSIC_BT) at initialization time to free unused BT Classic memory.

If the mode is ESP_BT_MODE_BTDM, then it may be useful to call API esp_bt_mem_release(ESP_BT_MODE_BTDM) instead, which internally calls esp_bt_controller_mem_release(ESP_BT_MODE_BTDM) and additionally releases the BSS and data consumed by the BT/BLE host stack to heap. For more details about usage please refer to the documentation of esp_bt_mem_release() function

Parameters **mode** –: the mode want to release memory
Returns ESP_OK - success, other - failed

esp_err_t **esp_bt_mem_release**(*esp_bt_mode_t* mode)

esp_bt_mem_release release controller memory and BSS and data section of the BT/BLE host stack as per the mode

This function first releases controller memory by internally calling esp_bt_controller_mem_release(). Additionally, if the mode is set to ESP_BT_MODE_BTDM, it also releases the BSS and data consumed by the BT/BLE host stack to heap

Note that once BT memory is released, the process cannot be reversed. It means you cannot use the bluetooth mode which you have released by this function.

If your firmware will later upgrade the Bluetooth controller mode (BLE -> BT Classic or disabled -> enabled) then do not call this function.

If you never intend to use bluetooth in a current boot-up cycle, you can call esp_bt_mem_release(ESP_BT_MODE_BTDM) before esp_bt_controller_init or after esp_bt_controller_deinit.

For example, if a user only uses bluetooth for setting the WiFi configuration, and does not use bluetooth in the rest of the product operation" . In such cases, after receiving the WiFi configuration, you can disable/deinit bluetooth and release its memory. Below is the sequence of APIs to be called for such scenarios:

```
esp_bluedroid_disable();
esp_bluedroid_deinit();
esp_bt_controller_disable();
esp_bt_controller_deinit();
esp_bt_mem_release(ESP_BT_MODE_BTDM);
```

Note: In case of NimBLE host, to release BSS and data memory to heap, the mode needs to be set to ESP_BT_MODE_BTDM as controller is dual mode.

Parameters **mode** –: the mode whose memory is to be released
Returns ESP_OK - success, other - failed

esp_err_t **esp_bt_sleep_enable**(void)

enable bluetooth to enter modem sleep

Note that this function shall not be invoked before esp_bt_controller_enable()

There are currently two options for bluetooth modem sleep, one is ORIG mode, and another is EVED Mode. EVED Mode is intended for BLE only.

For ORIG mode: Bluetooth modem sleep is enabled in controller start up by default if CONFIG_CTRL_BTDM_MODEM_SLEEP is set and "ORIG mode" is selected. In ORIG modem sleep mode, bluetooth controller will switch off some components and pause to work every now and then, if there is no event to process; and wakeup according to the scheduled interval and resume the work. It can also wakeup earlier upon external request using function "esp_bt_controller_wakeup_request" .

Returns
- ESP_OK : success
- other : failed

esp_err_t **esp_bt_sleep_disable**(void)

disable bluetooth modem sleep

Note that this function shall not be invoked before esp_bt_controller_enable()

If esp_bt_sleep_disable() is called, bluetooth controller will not be allowed to enter modem sleep;

If ORIG modem sleep mode is in use, if this function is called, bluetooth controller may not immediately wake up if it is dormant then. In this case, esp_bt_controller_wakeup_request() can be used to shorten the time for wakeup.

Returns
- ESP_OK : success
- other : failed

esp_err_t **esp_ble_scan_dupilcate_list_flush**(void)

Manually clear scan duplicate list.

Note that scan duplicate list will be automatically cleared when the maximum amount of device in the filter is reached the amount of device in the filter can be configured in menuconfig.

Note: This function name is incorrectly spelled, it will be fixed in release 5.x version.

Returns

- ESP_OK : success
- other : failed

void **esp_wifi_bt_power_domain_on**(void)

bt Wi-Fi power domain power on

void **esp_wifi_bt_power_domain_off**(void)

bt Wi-Fi power domain power off

Structures

struct **esp_bt_controller_config_t**

Controller config options, depend on config mask. Config mask indicate which functions enabled, this means some options or parameters of some functions enabled by config mask.

Public Members

uint16_t **controller_task_stack_size**

Bluetooth controller task stack size

uint8_t **controller_task_prio**

Bluetooth controller task priority

uint8_t **hci_uart_no**

If use UART1/2 as HCI IO interface, indicate UART number

uint32_t **hci_uart_baudrate**

If use UART1/2 as HCI IO interface, indicate UART baudrate

uint8_t **scan_duplicate_mode**

scan duplicate mode

uint8_t **scan_duplicate_type**

scan duplicate type

uint16_t **normal_adv_size**

Normal adv size for scan duplicate

uint16_t **mesh_adv_size**

Mesh adv size for scan duplicate

uint16_t **send_adv_reserved_size**

Controller minimum memory value

uint32_t **controller_debug_flag**

Controller debug log flag

uint8_t **mode**

Controller mode: BR/EDR, BLE or Dual Mode

uint8_t **ble_max_conn**

BLE maximum connection numbers

uint8_t **bt_max_acl_conn**

BR/EDR maximum ACL connection numbers

uint8_t **bt_sco_datapath**

SCO data path, i.e. HCI or PCM module

bool **auto_latency**

BLE auto latency, used to enhance classic BT performance

bool **bt_legacy_auth_vs_evt**

BR/EDR Legacy auth complete event required to protect from BIAS attack

uint8_t **bt_max_sync_conn**

BR/EDR maximum ACL connection numbers. Effective in menuconfig

uint8_t **ble_sca**

BLE low power crystal accuracy index

uint8_t **pcm_role**

PCM role (master & slave)

uint8_t **pcm_polar**

PCM polar trig (falling clk edge & rising clk edge)

bool **hli**

Using high level interrupt or not

uint32_t **magic**

Magic number

struct **esp_vhci_host_callback**

esp_vhci_host_callback used for vhci call host function to notify what host need to do

Public Members

void (*__notify_host_send_available__)(void)

callback used to notify that the host can send packet to controller

int (*__notify_host_recv__)(uint8_t *data, uint16_t len)

callback used to notify that the controller has a packet to send to the host

Macros

ESP_BT_CONTROLLER_CONFIG_MAGIC_VAL

BT_CONTROLLER_INIT_CONFIG_DEFAULT()

Type Definitions

typedef struct *esp_vhci_host_callback* **esp_vhci_host_callback_t**

esp_vhci_host_callback used for vhci call host function to notify what host need to do

Enumerations

enum **esp_bt_mode_t**

Bluetooth mode for controller enable/disable.

Values:

enumerator **ESP_BT_MODE_IDLE**

Bluetooth is not running

enumerator **ESP_BT_MODE_BLE**

Run BLE mode

enumerator **ESP_BT_MODE_CLASSIC_BT**

Run Classic BT mode

enumerator **ESP_BT_MODE_BTDM**

Run dual mode

enum **[anonymous]**

BLE sleep clock accuracy(SCA), values for ble_sca field in *esp_bt_controller_config_t*, currently only ESP_BLE_SCA_500PPM and ESP_BLE_SCA_250PPM are supported.

Values:

enumerator **ESP_BLE_SCA_500PPM**

BLE SCA at 500ppm

enumerator **ESP_BLE_SCA_250PPM**

BLE SCA at 250ppm

enumerator **ESP_BLE_SCA_150PPM**

BLE SCA at 150ppm

enumerator **ESP_BLE_SCA_100PPM**

BLE SCA at 100ppm

enumerator **ESP_BLE_SCA_75PPM**

BLE SCA at 75ppm

enumerator **ESP_BLE_SCA_50PPM**

BLE SCA at 50ppm

enumerator **ESP_BLE_SCA_30PPM**

BLE SCA at 30ppm

enumerator **ESP_BLE_SCA_20PPM**

BLE SCA at 20ppm

enum **esp_bt_controller_status_t**

Bluetooth controller enable/disable/initialised/de-initialised status.

Values:

enumerator **ESP_BT_CONTROLLER_STATUS_IDLE**

enumerator **ESP_BT_CONTROLLER_STATUS_INITED**

enumerator **ESP_BT_CONTROLLER_STATUS_ENABLED**

enumerator **ESP_BT_CONTROLLER_STATUS_NUM**

enum **esp_ble_power_type_t**

BLE tx power type ESP_BLE_PWR_TYPE_CONN_HDL0-8: for each connection, and only be set after connection completed. when disconnect, the correspond TX power is not effected. ESP_BLE_PWR_TYPE_ADV : for advertising/scan response. ESP_BLE_PWR_TYPE_SCAN : for scan. ESP_BLE_PWR_TYPE_DEFAULT : if each connection ' s TX power is not set, it will use this default value. if neither in scan mode nor in adv mode, it will use this default value. If none of power type is set, system will use ESP_PWR_LVL_P3 as default for ADV/SCAN/CONN0-9.

Values:

enumerator **ESP_BLE_PWR_TYPE_CONN_HDL0**

For connection handle 0

enumerator **ESP_BLE_PWR_TYPE_CONN_HDL1**

For connection handle 1

enumerator **ESP_BLE_PWR_TYPE_CONN_HDL2**

For connection handle 2

enumerator **ESP_BLE_PWR_TYPE_CONN_HDL3**

For connection handle 3

enumerator **ESP_BLE_PWR_TYPE_CONN_HDL4**

For connection handle 4

enumerator **ESP_BLE_PWR_TYPE_CONN_HDL5**

For connection handle 5

enumerator **ESP_BLE_PWR_TYPE_CONN_HDL6**

For connection handle 6

enumerator **ESP_BLE_PWR_TYPE_CONN_HDL7**

For connection handle 7

enumerator **ESP_BLE_PWR_TYPE_CONN_HDL8**

For connection handle 8

enumerator **ESP_BLE_PWR_TYPE_ADV**

For advertising

enumerator **ESP_BLE_PWR_TYPE_SCAN**

For scan

enumerator **ESP_BLE_PWR_TYPE_DEFAULT**

For default, if not set other, it will use default value

enumerator **ESP_BLE_PWR_TYPE_NUM**

TYPE numbers

enum **esp_power_level_t**

Bluetooth TX power level(index), it' s just a index corresponding to power(dbm).

Values:

enumerator **ESP_PWR_LVL_N12**

Corresponding to -12dbm

enumerator **ESP_PWR_LVL_N9**

Corresponding to -9dbm

enumerator **ESP_PWR_LVL_N6**

Corresponding to -6dbm

enumerator **ESP_PWR_LVL_N3**

Corresponding to -3dbm

enumerator **ESP_PWR_LVL_N0**

Corresponding to 0dbm

enumerator **ESP_PWR_LVL_P3**

Corresponding to +3dbm

enumerator **ESP_PWR_LVL_P6**

Corresponding to +6dbm

enumerator **ESP_PWR_LVL_P9**

Corresponding to +9dbm

enumerator **ESP_PWR_LVL_N14**

Backward compatibility! Setting to -14dbm will actually result to -12dbm

enumerator **ESP_PWR_LVL_N11**

Backward compatibility! Setting to -11dbm will actually result to -9dbm

enumerator **ESP_PWR_LVL_N8**

Backward compatibility! Setting to -8dbm will actually result to -6dbm

enumerator **ESP_PWR_LVL_N5**

Backward compatibility! Setting to -5dbm will actually result to -3dbm

enumerator **ESP_PWR_LVL_N2**

Backward compatibility! Setting to -2dbm will actually result to 0dbm

enumerator **ESP_PWR_LVL_P1**

Backward compatibility! Setting to +1dbm will actually result to +3dbm

enumerator **ESP_PWR_LVL_P4**

Backward compatibility! Setting to +4dbm will actually result to +6dbm

enumerator **ESP_PWR_LVL_P7**

Backward compatibility! Setting to +7dbm will actually result to +9dbm

enum **esp_sco_data_path_t**

Bluetooth audio data transport path.

Values:

enumerator **ESP_SCO_DATA_PATH_HCI**

data over HCI transport

enumerator **ESP_SCO_DATA_PATH_PCM**

data over PCM interface

2.1.2 BT COMMON

BT GENERIC DEFINES

API Reference

Header File

- components/bt/host/bluedroid/api/include/api/esp_bt_defs.h

Structures

struct **esp_bt_uuid_t**

UUID type.

Public Members

uint16_t **len**

UUID length, 16bit, 32bit or 128bit

uint16_t **uuid16**
: 16bit UUID

uint32_t **uuid32**
: 32bit UUID

uint8_t **uuid128**[16]
: 128bit UUID

union *esp_bt_uuid_t*::[anonymous] **uuid**
: UUID

Macros

ESP_BLUEDROID_STATUS_CHECK(status)

ESP_BT_OCTET16_LEN

ESP_BT_OCTET8_LEN

ESP_DEFAULT_GATT_IF
: Default GATT interface id.

ESP_BLE_PRIM_ADV_INT_MIN
: Minimum advertising interval for undirected and low duty cycle directed advertising

ESP_BLE_PRIM_ADV_INT_MAX
: Maximum advertising interval for undirected and low duty cycle directed advertising

ESP_BLE_CONN_INT_MIN
: relate to BTM_BLE_CONN_INT_MIN in stack/btm_ble_api.h

ESP_BLE_CONN_INT_MAX
: relate to BTM_BLE_CONN_INT_MAX in stack/btm_ble_api.h

ESP_BLE_CONN_LATENCY_MAX
: relate to ESP_BLE_CONN_LATENCY_MAX in stack/btm_ble_api.h

ESP_BLE_CONN_SUP_TOUT_MIN
: relate to BTM_BLE_CONN_SUP_TOUT_MIN in stack/btm_ble_api.h

ESP_BLE_CONN_SUP_TOUT_MAX
: relate to ESP_BLE_CONN_SUP_TOUT_MAX in stack/btm_ble_api.h

ESP_BLE_CONN_PARAM_UNDEF

ESP_BLE_SCAN_PARAM_UNDEF

ESP_BLE_IS_VALID_PARAM(x, min, max)
: Check the param is valid or not.

ESP_UUID_LEN_16

ESP_UUID_LEN_32

ESP_UUID_LEN_128

ESP_BD_ADDR_LEN

Bluetooth address length.

ESP_BLE_ENC_KEY_MASK

Used to exchange the encryption key in the init key & response key.

ESP_BLE_ID_KEY_MASK

Used to exchange the IRK key in the init key & response key.

ESP_BLE_CSR_KEY_MASK

Used to exchange the CSRK key in the init key & response key.

ESP_BLE_LINK_KEY_MASK

Used to exchange the link key(this key just used in the BLE & BR/EDR coexist mode) in the init key & response key.

ESP_APP_ID_MIN

Minimum of the application id.

ESP_APP_ID_MAX

Maximum of the application id.

ESP_BD_ADDR_STR

ESP_BD_ADDR_HEX(addr)

Type Definitions

typedef uint8_t **esp_bt_octet16_t**[16]

typedef uint8_t **esp_bt_octet8_t**[8]

typedef uint8_t **esp_link_key**[16]

typedef uint8_t **esp_bd_addr_t**[6]

Bluetooth device address.

typedef uint8_t **esp_ble_key_mask_t**

Enumerations

enum **esp_bt_status_t**

Status Return Value.

Values:

enumerator **ESP_BT_STATUS_SUCCESS**

enumerator **ESP_BT_STATUS_FAIL**

enumerator **ESP_BT_STATUS_NOT_READY**

enumerator **ESP_BT_STATUS_NOMEM**

enumerator **ESP_BT_STATUS_BUSY**

enumerator **ESP_BT_STATUS_DONE**

enumerator **ESP_BT_STATUS_UNSUPPORTED**

enumerator **ESP_BT_STATUS_PARM_INVALID**

enumerator **ESP_BT_STATUS_UNHANDLED**

enumerator **ESP_BT_STATUS_AUTH_FAILURE**

enumerator **ESP_BT_STATUS_RMT_DEV_DOWN**

enumerator **ESP_BT_STATUS_AUTH_REJECTED**

enumerator **ESP_BT_STATUS_INVALID_STATIC_RAND_ADDR**

enumerator **ESP_BT_STATUS_PENDING**

enumerator **ESP_BT_STATUS_UNACCEPT_CONN_INTERVAL**

enumerator **ESP_BT_STATUS_PARAM_OUT_OF_RANGE**

enumerator **ESP_BT_STATUS_TIMEOUT**

enumerator **ESP_BT_STATUS_PEER_LE_DATA_LEN_UNSUPPORTED**

enumerator **ESP_BT_STATUS_CONTROL_LE_DATA_LEN_UNSUPPORTED**

enumerator **ESP_BT_STATUS_ERR_ILLEGAL_PARAMETER_FMT**

enumerator **ESP_BT_STATUS_MEMORY_FULL**

enumerator **ESP_BT_STATUS_EIR_TOO_LARGE**

enum **esp_bt_dev_type_t**

Bluetooth device type.

Values:

enumerator **ESP_BT_DEVICE_TYPE_BREDR**

enumerator **ESP_BT_DEVICE_TYPE_BLE**

enumerator **ESP_BT_DEVICE_TYPE_DUMO**

enum **esp_ble_addr_type_t**

BLE device address type.

Values:

enumerator **BLE_ADDR_TYPE_PUBLIC**

enumerator **BLE_ADDR_TYPE_RANDOM**

enumerator **BLE_ADDR_TYPE_RPA_PUBLIC**

enumerator **BLE_ADDR_TYPE_RPA_RANDOM**

enum **esp_ble_wl_addr_type_t**

white list address type

Values:

enumerator **BLE_WL_ADDR_TYPE_PUBLIC**

enumerator **BLE_WL_ADDR_TYPE_RANDOM**

BT MAIN API

API Reference

Header File

- components/bt/host/bluedroid/api/include/api/esp_bt_main.h

Functions

esp_bluedroid_status_t **esp_bluedroid_get_status**(void)

Get bluetooth stack status.

Returns Bluetooth stack status

esp_err_t **esp_bluedroid_enable**(void)

Enable bluetooth, must after esp_bluedroid_init().

Returns
- ESP_OK : Succeed
- Other : Failed

esp_err_t **esp_bluedroid_disable**(void)

Disable bluetooth, must prior to esp_bluedroid_deinit().

Returns
- ESP_OK : Succeed
- Other : Failed

esp_err_t **esp_bluedroid_init**(void)

Init and alloc the resource for bluetooth, must be prior to every bluetooth stuff.

Returns
- ESP_OK : Succeed
- Other : Failed

esp_err_t **esp_bluedroid_deinit**(void)

Deinit and free the resource for bluetooth, must be after every bluetooth stuff.

Returns
- ESP_OK : Succeed
- Other : Failed

Enumerations

enum **esp_bluedroid_status_t**

Bluetooth stack status type, to indicate whether the bluetooth stack is ready.

Values:

enumerator **ESP_BLUEDROID_STATUS_UNINITIALIZED**

Bluetooth not initialized

enumerator **ESP_BLUEDROID_STATUS_INITIALIZED**

Bluetooth initialized but not enabled

enumerator **ESP_BLUEDROID_STATUS_ENABLED**

Bluetooth initialized and enabled

BT DEVICE APIs

Overview Bluetooth device reference APIs.

API Reference

Header File

- components/bt/host/bluedroid/api/include/api/esp_bt_device.h

Functions

const uint8_t ***esp_bt_dev_get_address**(void)

Get bluetooth device address. Must use after "esp_bluedroid_enable" .

Returns bluetooth device address (six bytes), or NULL if bluetooth stack is not enabled

esp_err_t **esp_bt_dev_set_device_name**(const char *name)

Set bluetooth device name. This function should be called after esp_bluedroid_enable() completes successfully.

A BR/EDR/LE device type shall have a single Bluetooth device name which shall be identical irrespective of the physical channel used to perform the name discovery procedure.

Parameters **name** –**[in]** : device name to be set

Returns

- ESP_OK : Succeed
- ESP_ERR_INVALID_ARG : if name is NULL pointer or empty, or string length out of limit
- ESP_ERR_INVALID_STATE : if bluetooth stack is not yet enabled
- ESP_FAIL : others

2.1.3 BT LE

GAP API

Application Example Check bluetooth/bluedroid/ble folder in ESP-IDF examples, which contains the following demos and their tutorials:

- This is a SMP security client demo and its tutorial. This demo initiates its security parameters and acts as a GATT client, which can send a security request to the peer device and then complete the encryption procedure.
  - bluetooth/bluedroid/ble/gatt_security_client
  - GATT Security Client Example Walkthrough
- This is a SMP security server demo and its tutorial. This demo initiates its security parameters and acts as a GATT server, which can send a pair request to the peer device and then complete the encryption procedure.
  - bluetooth/bluedroid/ble/gatt_security_server
  - GATT Security Server Example Walkthrough

API Reference

Header File

- components/bt/host/bluedroid/api/include/api/esp_gap_ble_api.h

Functions

esp_err_t **esp_ble_gap_register_callback**(*esp_gap_ble_cb_t* callback)

This function is called to occur gap event, such as scan result.

Parameters **callback** –**[in]** callback function

Returns

- ESP_OK : success
- other : failed

esp_err_t **esp_ble_gap_config_adv_data**(*esp_ble_adv_data_t* *adv_data)

This function is called to override the BTA default ADV parameters.

Parameters **adv_data** –**[in]** Pointer to User defined ADV data structure. This memory space can not be freed until callback of config_adv_data is received.

Returns

- ESP_OK : success
- other : failed

esp_err_t **esp_ble_gap_set_scan_params** (*esp_ble_scan_params_t* *scan_params)

This function is called to set scan parameters.

Parameters **scan_params** –**[in]** Pointer to User defined scan_params data structure. This memory space can not be freed until callback of set_scan_params

Returns

- ESP_OK : success
- other : failed

esp_err_t **esp_ble_gap_start_scanning** (uint32_t duration)

This procedure keep the device scanning the peer device which advertising on the air.

Parameters **duration** –**[in]** Keeping the scanning time, the unit is second.

Returns

- ESP_OK : success
- other : failed

esp_err_t **esp_ble_gap_stop_scanning** (void)

This function call to stop the device scanning the peer device which advertising on the air.

Returns

- ESP_OK : success
- other : failed

esp_err_t **esp_ble_gap_start_advertising** (*esp_ble_adv_params_t* *adv_params)

This function is called to start advertising.

Parameters **adv_params** –**[in]** pointer to User defined adv_params data structure.

Returns

- ESP_OK : success
- other : failed

esp_err_t **esp_ble_gap_stop_advertising** (void)

This function is called to stop advertising.

Returns

- ESP_OK : success
- other : failed

esp_err_t **esp_ble_gap_update_conn_params** (*esp_ble_conn_update_params_t* *params)

Update connection parameters, can only be used when connection is up.

Parameters **params** –**[in]** - connection update parameters

Returns

- ESP_OK : success
- other : failed

esp_err_t **esp_ble_gap_set_pkt_data_len** (*esp_bd_addr_t* remote_device, uint16_t tx_data_length)

This function is to set maximum LE data packet size.

Returns

- ESP_OK : success
- other : failed

esp_err_t **esp_ble_gap_set_rand_addr** (*esp_bd_addr_t* rand_addr)

This function sets the static Random Address and Non-Resolvable Private Address for the application.

Parameters **rand_addr** –**[in]** the random address which should be setting

Returns

- ESP_OK : success
- other : failed

esp_err_t **esp_ble_gap_clear_rand_addr** (void)

This function clears the random address for the application.

Returns
- ESP_OK : success
- other : failed

esp_err_t **esp_ble_gap_config_local_privacy** (bool privacy_enable)

Enable/disable privacy on the local device.

Parameters **privacy_enable** –**[in]** - enable/disable privacy on remote device.

Returns
- ESP_OK : success
- other : failed

esp_err_t **esp_ble_gap_config_local_icon** (uint16_t icon)

set local gap appearance icon

Parameters **icon** –**[in]** - External appearance value, these values are defined by the Bluetooth SIG, please refer to https://specificationrefs.bluetooth.com/assigned-values/Appearance%20Values.pdf

Returns
- ESP_OK : success
- other : failed

esp_err_t **esp_ble_gap_update_whitelist** (bool add_remove, *esp_bd_addr_t* remote_bda, *esp_ble_wl_addr_type_t* wl_addr_type)

Add or remove device from white list.

Parameters
- **add_remove** –**[in]** the value is true if added the ble device to the white list, and false remove to the white list.
- **remote_bda** –**[in]** the remote device address add/remove from the white list.
- **wl_addr_type** –**[in]** whitelist address type

Returns
- ESP_OK : success
- other : failed

esp_err_t **esp_ble_gap_clear_whitelist** (void)

Clear all white list.

Returns
- ESP_OK : success
- other : failed

esp_err_t **esp_ble_gap_get_whitelist_size** (uint16_t *length)

Get the whitelist size in the controller.

Parameters **length** –**[out]** the white list length.

Returns
- ESP_OK : success
- other : failed

esp_err_t **esp_ble_gap_set_prefer_conn_params** (*esp_bd_addr_t* bd_addr, uint16_t min_conn_int, uint16_t max_conn_int, uint16_t slave_latency, uint16_t supervision_tout)

This function is called to set the preferred connection parameters when default connection parameter is not desired before connecting. This API can only be used in the master role.

Parameters
- **bd_addr** –**[in]** BD address of the peripheral
- **min_conn_int** –**[in]** minimum preferred connection interval
- **max_conn_int** –**[in]** maximum preferred connection interval

- **slave_latency** –**[in]** preferred slave latency
- **supervision_tout** –**[in]** preferred supervision timeout

Returns

- ESP_OK : success
- other : failed

esp_err_t **esp_ble_gap_set_device_name**(const char *name)

Set device name to the local device.

Parameters **name** –**[in]** - device name.

Returns

- ESP_OK : success
- other : failed

esp_err_t **esp_ble_gap_get_local_used_addr**(*esp_bd_addr_t* local_used_addr, uint8_t *addr_type)

This function is called to get local used address and adress type. uint8_t *esp_bt_dev_get_address(void) get the public address.

Parameters

- **local_used_addr** –**[in]** - current local used ble address (six bytes)
- **addr_type** –**[in]** - ble address type

Returns - ESP_OK : success

- other : failed

uint8_t ***esp_ble_resolve_adv_data**(uint8_t *adv_data, uint8_t type, uint8_t *length)

This function is called to get ADV data for a specific type.

Parameters

- **adv_data** –**[in]** - pointer of ADV data which to be resolved
- **type** –**[in]** - finding ADV data type
- **length** –**[out]** - return the length of ADV data not including type

Returns pointer of ADV data

esp_err_t **esp_ble_gap_config_adv_data_raw**(uint8_t *raw_data, uint32_t raw_data_len)

This function is called to set raw advertising data. User need to fill ADV data by self.

Parameters

- **raw_data** –**[in]** : raw advertising data
- **raw_data_len** –**[in]** : raw advertising data length , less than 31 bytes

Returns

- ESP_OK : success
- other : failed

esp_err_t **esp_ble_gap_config_scan_rsp_data_raw**(uint8_t *raw_data, uint32_t raw_data_len)

This function is called to set raw scan response data. User need to fill scan response data by self.

Parameters

- **raw_data** –**[in]** : raw scan response data
- **raw_data_len** –**[in]** : raw scan response data length , less than 31 bytes

Returns

- ESP_OK : success
- other : failed

esp_err_t **esp_ble_gap_read_rssi**(*esp_bd_addr_t* remote_addr)

This function is called to read the RSSI of remote device. The address of link policy results are returned in the gap callback function with ESP_GAP_BLE_READ_RSSI_COMPLETE_EVT event.

Parameters **remote_addr** –**[in]** : The remote connection device address.

Returns

- ESP_OK : success
- other : failed

esp_err_t **esp_ble_gap_add_duplicate_scan_exceptional_device**(*esp_ble_duplicate_exceptional_info_type_t* type, *esp_duplicate_info_t* device_info)

This function is called to add a device info into the duplicate scan exceptional list.

Parameters

- **type** –**[in]** device info type, it is defined in esp_ble_duplicate_exceptional_info_type_t when type is MESH_BEACON_TYPE, MESH_PROV_SRV_ADV or MESH_PROXY_SRV_ADV , device_info is invalid.
- **device_info** –**[in]** the device information.

Returns

- ESP_OK : success
- other : failed

esp_err_t **esp_ble_gap_remove_duplicate_scan_exceptional_device**(*esp_ble_duplicate_exceptional_info_type_t* type, *esp_duplicate_info_t* device_info)

This function is called to remove a device info from the duplicate scan exceptional list.

Parameters

- **type** –**[in]** device info type, it is defined in esp_ble_duplicate_exceptional_info_type_t when type is MESH_BEACON_TYPE, MESH_PROV_SRV_ADV or MESH_PROXY_SRV_ADV , device_info is invalid.
- **device_info** –**[in]** the device information.

Returns

- ESP_OK : success
- other : failed

esp_err_t **esp_ble_gap_clean_duplicate_scan_exceptional_list**(*esp_duplicate_scan_exceptional_list_type_t* list_type)

This function is called to clean the duplicate scan exceptional list. This API will delete all device information in the duplicate scan exceptional list.

Parameters **list_type** –**[in]** duplicate scan exceptional list type, the value can be one or more of esp_duplicate_scan_exceptional_list_type_t.

Returns

- ESP_OK : success
- other : failed

esp_err_t **esp_ble_gap_set_security_param**(*esp_ble_sm_param_t* param_type, void *value, uint8_t len)

Set a GAP security parameter value. Overrides the default value.

Secure connection is highly recommended to avoid some major vulnerabilities like ‘Impersonation in the Pin Pairing Protocol’ (CVE-2020-26555) and ‘Authentication of the LE Legacy Pairing Protocol’.

To accept only `secure connection mode`, it is necessary do as following:

a. Set bit `ESP_LE_AUTH_REQ_SC_ONLY` (`param_type` is `ESP_BLE_SM_AUTHEN_REQ_MODE`), bit `ESP_LE_AUTH_BOND` and bit `ESP_LE_AUTH_REQ_MITM` is optional as required.
b. Set to `ESP_BLE_ONLY_ACCEPT_SPECIFIED_AUTH_ENABLE` (`param_type` is `ESP_BLE_SM_ONLY_ACCEPT_SPECIFIED_SEC_AUTH`).

Parameters

- **param_type** –**[in]** : the type of the param which to be set
- **value** –**[in]** : the param value
- **len** –**[in]** : the length of the param value

Returns - ESP_OK : success

- other : failed

esp_err_t **esp_ble_gap_security_rsp** (*esp_bd_addr_t* bd_addr, bool accept)

Grant security request access.

Parameters
- **bd_addr** –**[in]** : BD address of the peer
- **accept** –**[in]** : accept the security request or not

Returns - ESP_OK : success
- other : failed

esp_err_t **esp_ble_set_encryption** (*esp_bd_addr_t* bd_addr, *esp_ble_sec_act_t* sec_act)

Set a gap parameter value. Use this function to change the default GAP parameter values.

Parameters
- **bd_addr** –**[in]** : the address of the peer device need to encryption
- **sec_act** –**[in]** : This is the security action to indicate what kind of BLE security level is required for the BLE link if the BLE is supported

Returns - ESP_OK : success
- other : failed

esp_err_t **esp_ble_passkey_reply** (*esp_bd_addr_t* bd_addr, bool accept, uint32_t passkey)

Reply the key value to the peer device in the legacy connection stage.

Parameters
- **bd_addr** –**[in]** : BD address of the peer
- **accept** –**[in]** : passkey entry successful or declined.
- **passkey** –**[in]** : passkey value, must be a 6 digit number, can be lead by 0.

Returns - ESP_OK : success
- other : failed

esp_err_t **esp_ble_confirm_reply** (*esp_bd_addr_t* bd_addr, bool accept)

Reply the confirm value to the peer device in the secure connection stage.

Parameters
- **bd_addr** –**[in]** : BD address of the peer device
- **accept** –**[in]** : numbers to compare are the same or different.

Returns - ESP_OK : success
- other : failed

esp_err_t **esp_ble_remove_bond_device** (*esp_bd_addr_t* bd_addr)

Removes a device from the security database list of peer device. It manages unpairing event while connected.

Parameters **bd_addr** –**[in]** : BD address of the peer device

Returns - ESP_OK : success
- other : failed

int **esp_ble_get_bond_device_num** (void)

Get the device number from the security database list of peer device. It will return the device bonded number immediately.

Returns - >= 0 : bonded devices number.
- ESP_FAIL : failed

esp_err_t **esp_ble_get_bond_device_list** (int *dev_num, *esp_ble_bond_dev_t* *dev_list)

Get the device from the security database list of peer device. It will return the device bonded information immediately.

Parameters
- **dev_num** –**[inout]** Indicate the dev_list array(buffer) size as input. If dev_num is large enough, it means the actual number as output. Suggest that dev_num value equal to esp_ble_get_bond_device_num().
- **dev_list** –**[out]** an array(buffer) of `esp_ble_bond_dev_t` type. Use for storing the bonded devices address. The dev_list should be allocated by who call this API.

Returns - ESP_OK : success

- other : failed

esp_err_t **esp_ble_oob_req_reply**(*esp_bd_addr_t* bd_addr, uint8_t *TK, uint8_t len)

This function is called to provide the OOB data for SMP in response to ESP_GAP_BLE_OOB_REQ_EVT.

Parameters
- **bd_addr** –**[in]** BD address of the peer device.
- **TK** –**[in]** Temporary Key value, the TK value shall be a 128-bit random number
- **len** –**[in]** length of temporary key, should always be 128-bit

Returns - ESP_OK : success
- other : failed

esp_err_t **esp_ble_gap_disconnect**(*esp_bd_addr_t* remote_device)

This function is to disconnect the physical connection of the peer device gattc may have multiple virtual GATT server connections when multiple app_id registered. esp_ble_gattc_close (esp_gatt_if_t gattc_if, uint16_t conn_id) only close one virtual GATT server connection. if there exist other virtual GATT server connections, it does not disconnect the physical connection. esp_ble_gap_disconnect(esp_bd_addr_t remote_device) disconnect the physical connection directly.

Parameters **remote_device** –**[in]** : BD address of the peer device
Returns - ESP_OK : success
- other : failed

esp_err_t **esp_ble_get_current_conn_params**(*esp_bd_addr_t* bd_addr, *esp_gap_conn_params_t* *conn_params)

This function is called to read the connection parameters information of the device.

Parameters
- **bd_addr** –**[in]** BD address of the peer device.
- **conn_params** –**[out]** the connection parameters information

Returns - ESP_OK : success
- other : failed

esp_err_t **esp_gap_ble_set_channels**(*esp_gap_ble_channels* channels)

BLE set channels.

Parameters **channels** –**[in]** : The n th such field (in the range 0 to 36) contains the value for the link layer channel index n. 0 means channel n is bad. 1 means channel n is unknown. The most significant bits are reserved and shall be set to 0. At least one channel shall be marked as unknown.

Returns - ESP_OK : success
- ESP_ERR_INVALID_STATE: if bluetooth stack is not yet enabled
- other : failed

esp_err_t **esp_gap_ble_set_authorization**(*esp_bd_addr_t* bd_addr, bool authorize)

This function is called to authorized a link after Authentication(MITM protection)

Parameters
- **bd_addr** –**[in]** BD address of the peer device.
- **authorize** –**[out]** Authorized the link or not.

Returns - ESP_OK : success
- other : failed

esp_err_t **esp_ble_gap_read_phy**(*esp_bd_addr_t* bd_addr)

This function is used to read the current transmitter PHY and receiver PHY on the connection identified by remote address.

Parameters **bd_addr** –**[in]** : BD address of the peer device
Returns - ESP_OK : success
- other : failed

esp_err_t **esp_ble_gap_set_prefered_default_phy**(*esp_ble_gap_phy_mask_t* tx_phy_mask, *esp_ble_gap_phy_mask_t* rx_phy_mask)

This function is used to allows the Host to specify its preferred values for the transmitter PHY and receiver PHY to be used for all subsequent connections over the LE transport.

Parameters
- **tx_phy_mask** –**[in]** : indicates the transmitter PHYs that the Host prefers the Controller to use
- **rx_phy_mask** –**[in]** : indicates the receiver PHYs that the Host prefers the Controller to use

Returns - ESP_OK : success
- other : failed

esp_err_t **esp_ble_gap_set_prefered_phy**(*esp_bd_addr_t* bd_addr, *esp_ble_gap_all_phys_t* all_phys_mask, *esp_ble_gap_phy_mask_t* tx_phy_mask, *esp_ble_gap_phy_mask_t* rx_phy_mask, *esp_ble_gap_prefer_phy_options_t* phy_options)

This function is used to set the PHY preferences for the connection identified by the remote address. The Controller might not be able to make the change (e.g. because the peer does not support the requested PHY) or may decide that the current PHY is preferable.

Parameters
- **bd_addr** –**[in]** : remote address
- **all_phys_mask** –**[in]** : a bit field that allows the Host to specify
- **tx_phy_mask** –**[in]** : a bit field that indicates the transmitter PHYs that the Host prefers the Controller to use
- **rx_phy_mask** –**[in]** : a bit field that indicates the receiver PHYs that the Host prefers the Controller to use
- **phy_options** –**[in]** : a bit field that allows the Host to specify options for PHYs

Returns - ESP_OK : success
- other : failed

esp_err_t **esp_ble_gap_ext_adv_set_rand_addr**(uint8_t instance, *esp_bd_addr_t* rand_addr)

This function is used by the Host to set the random device address specified by the Random_Address parameter.

Parameters
- **instance** –**[in]** : Used to identify an advertising set
- **rand_addr** –**[in]** : Random Device Address

Returns - ESP_OK : success
- other : failed

esp_err_t **esp_ble_gap_ext_adv_set_params**(uint8_t instance, const *esp_ble_gap_ext_adv_params_t* *params)

This function is used by the Host to set the advertising parameters.

Parameters
- **instance** –**[in]** : identifies the advertising set whose parameters are being configured.
- **params** –**[in]** : advertising parameters

Returns - ESP_OK : success
- other : failed

esp_err_t **esp_ble_gap_config_ext_adv_data_raw**(uint8_t instance, uint16_t length, const uint8_t *data)

This function is used to set the data used in advertising PDUs that have a data field.

Parameters
- **instance** –**[in]** : identifies the advertising set whose data are being configured
- **length** –**[in]** : data length
- **data** –**[in]** : data information

Returns - ESP_OK : success
- other : failed

esp_err_t **esp_ble_gap_config_ext_scan_rsp_data_raw**(uint8_t instance, uint16_t length, const uint8_t *scan_rsp_data)

This function is used to provide scan response data used in scanning response PDUs.

Parameters
- **instance** –**[in]** : identifies the advertising set whose response data are being configured.
- **length** –**[in]** : responsedata length
- **scan_rsp_data** –**[in]** : response data information

Returns - ESP_OK : success
- other : failed

esp_err_t **esp_ble_gap_ext_adv_start**(uint8_t num_adv, const *esp_ble_gap_ext_adv_t* *ext_adv)

This function is used to request the Controller to enable one or more advertising sets using the advertising sets identified by the instance parameter.

Parameters
- **num_adv** –**[in]** : Number of advertising sets to enable or disable
- **ext_adv** –**[in]** : adv parameters

Returns - ESP_OK : success
- other : failed

esp_err_t **esp_ble_gap_ext_adv_stop**(uint8_t num_adv, const uint8_t *ext_adv_inst)

This function is used to request the Controller to disable one or more advertising sets using the advertising sets identified by the instance parameter.

Parameters
- **num_adv** –**[in]** : Number of advertising sets to enable or disable
- **ext_adv_inst** –**[in]** : ext adv instance

Returns - ESP_OK : success
- other : failed

esp_err_t **esp_ble_gap_ext_adv_set_remove**(uint8_t instance)

This function is used to remove an advertising set from the Controller.

Parameters **instance** –**[in]** : Used to identify an advertising set

Returns - ESP_OK : success
- other : failed

esp_err_t **esp_ble_gap_ext_adv_set_clear**(void)

This function is used to remove all existing advertising sets from the Controller.

Returns - ESP_OK : success
- other : failed

esp_err_t **esp_ble_gap_periodic_adv_set_params**(uint8_t instance, const *esp_ble_gap_periodic_adv_params_t* *params)

This function is used by the Host to set the parameters for periodic advertising.

Parameters
- **instance** –**[in]** : identifies the advertising set whose periodic advertising parameters are being configured.
- **params** –**[in]** : periodic adv parameters

Returns - ESP_OK : success
- other : failed

esp_err_t **esp_ble_gap_config_periodic_adv_data_raw**(uint8_t instance, uint16_t length, const uint8_t *data)

This function is used to set the data used in periodic advertising PDUs.

Parameters
- **instance** –**[in]** : identifies the advertising set whose periodic advertising parameters are being configured.
- **length** –**[in]** : the length of periodic data

- **data** –**[in]** : periodic data information

Returns - ESP_OK : success
- other : failed

esp_err_t **esp_ble_gap_periodic_adv_start** (uint8_t instance)

This function is used to request the Controller to enable the periodic advertising for the advertising set specified.

Parameters **instance** –**[in]** : Used to identify an advertising set
Returns - ESP_OK : success
- other : failed

esp_err_t **esp_ble_gap_periodic_adv_stop** (uint8_t instance)

This function is used to request the Controller to disable the periodic advertising for the advertising set specified.

Parameters **instance** –**[in]** : Used to identify an advertising set
Returns - ESP_OK : success
- other : failed

esp_err_t **esp_ble_gap_set_ext_scan_params** (const *esp_ble_ext_scan_params_t* *params)

This function is used to set the extended scan parameters to be used on the advertising channels.

Parameters **params** –**[in]** : scan parameters
Returns - ESP_OK : success
- other : failed

esp_err_t **esp_ble_gap_start_ext_scan** (uint32_t duration, uint16_t period)

This function is used to enable scanning.

Parameters
- **duration** –**[in]** : Scan duration
- **period** –**[in]** : Time interval from when the Controller started its last Scan Duration until it begins the subsequent Scan Duration.

Returns - ESP_OK : success
- other : failed

esp_err_t **esp_ble_gap_stop_ext_scan** (void)

This function is used to disable scanning.

Returns - ESP_OK : success
- other : failed

esp_err_t **esp_ble_gap_periodic_adv_create_sync** (const *esp_ble_gap_periodic_adv_sync_params_t* *params)

This function is used to synchronize with periodic advertising from an advertiser and begin receiving periodic advertising packets.

Parameters **params** –**[in]** : sync parameters
Returns - ESP_OK : success
- other : failed

esp_err_t **esp_ble_gap_periodic_adv_sync_cancel** (void)

This function is used to cancel the LE_Periodic_Advertising_Create_Sync command while it is pending.

Returns - ESP_OK : success
- other : failed

esp_err_t **esp_ble_gap_periodic_adv_sync_terminate** (uint16_t sync_handle)

This function is used to stop reception of the periodic advertising identified by the Sync Handle parameter.

Parameters **sync_handle** –**[in]** : identify the periodic advertiser
Returns - ESP_OK : success
- other : failed

esp_err_t **esp_ble_gap_periodic_adv_add_dev_to_list**(*esp_ble_addr_type_t* addr_type, *esp_bd_addr_t* addr, uint8_t sid)

This function is used to add a single device to the Periodic Advertiser list stored in the Controller.

Parameters
- **addr_type** –**[in]** : address type
- **addr** –**[in]** : Device Address
- **sid** –**[in]** : Advertising SID subfield in the ADI field used to identify the Periodic Advertising

Returns - ESP_OK : success
- other : failed

esp_err_t **esp_ble_gap_periodic_adv_remove_dev_from_list**(*esp_ble_addr_type_t* addr_type, *esp_bd_addr_t* addr, uint8_t sid)

This function is used to remove one device from the list of Periodic Advertisers stored in the Controller. Removals from the Periodic Advertisers List take effect immediately.

Parameters
- **addr_type** –**[in]** : address type
- **addr** –**[in]** : Device Address
- **sid** –**[in]** : Advertising SID subfield in the ADI field used to identify the Periodic Advertising

Returns - ESP_OK : success
- other : failed

esp_err_t **esp_ble_gap_periodic_adv_clear_dev**(void)

This function is used to remove all devices from the list of Periodic Advertisers in the Controller.

Returns - ESP_OK : success
- other : failed

esp_err_t **esp_ble_gap_prefer_ext_connect_params_set**(*esp_bd_addr_t* addr, *esp_ble_gap_phy_mask_t* phy_mask, const *esp_ble_gap_conn_params_t* *phy_1m_conn_params, const *esp_ble_gap_conn_params_t* *phy_2m_conn_params, const *esp_ble_gap_conn_params_t* *phy_coded_conn_params)

This function is used to set aux connection parameters.

Parameters
- **addr** –**[in]** : device address
- **phy_mask** –**[in]** : indicates the PHY(s) on which the advertising packets should be received on the primary advertising channel and the PHYs for which connection parameters have been specified.
- **phy_1m_conn_params** –**[in]** : Scan connectable advertisements on the LE 1M PHY. Connection parameters for the LE 1M PHY are provided.
- **phy_2m_conn_params** –**[in]** : Connection parameters for the LE 2M PHY are provided.
- **phy_coded_conn_params** –**[in]** : Scan connectable advertisements on the LE Coded PHY. Connection parameters for the LE Coded PHY are provided.

Returns - ESP_OK : success
- other : failed

Unions

union **esp_ble_key_value_t**

#include <esp_gap_ble_api.h> union type of the security key value

Public Members

esp_ble_penc_keys_t **penc_key**

received peer encryption key

esp_ble_pcsrk_keys_t **pcsrk_key**

received peer device SRK

esp_ble_pid_keys_t **pid_key**

peer device ID key

esp_ble_lenc_keys_t **lenc_key**

local encryption reproduction keys LTK = = d1(ER,DIV,0)

esp_ble_lcsrk_keys **lcsrk_key**

local device CSRK = d1(ER,DIV,1)

union **esp_ble_sec_t**

#include <esp_gap_ble_api.h> union associated with ble security

Public Members

esp_ble_sec_key_notif_t **key_notif**

passkey notification

esp_ble_sec_req_t **ble_req**

BLE SMP related request

esp_ble_key_t **ble_key**

BLE SMP keys used when pairing

esp_ble_local_id_keys_t **ble_id_keys**

BLE IR event

esp_ble_auth_cmpl_t **auth_cmpl**

Authentication complete indication.

union **esp_ble_gap_cb_param_t**

#include <esp_gap_ble_api.h> Gap callback parameters union.

Public Members

struct *esp_ble_gap_cb_param_t*::*ble_adv_data_cmpl_evt_param* **adv_data_cmpl**

Event parameter of ESP_GAP_BLE_ADV_DATA_SET_COMPLETE_EVT

struct *esp_ble_gap_cb_param_t*::*ble_scan_rsp_data_cmpl_evt_param* **scan_rsp_data_cmpl**

Event parameter of ESP_GAP_BLE_SCAN_RSP_DATA_SET_COMPLETE_EVT

struct *esp_ble_gap_cb_param_t*::*ble_scan_param_cmpl_evt_param* **scan_param_cmpl**

Event parameter of ESP_GAP_BLE_SCAN_PARAM_SET_COMPLETE_EVT

struct *esp_ble_gap_cb_param_t*::*ble_scan_result_evt_param* **scan_rst**

Event parameter of ESP_GAP_BLE_SCAN_RESULT_EVT

struct *esp_ble_gap_cb_param_t*::*ble_adv_data_raw_cmpl_evt_param* **adv_data_raw_cmpl**

Event parameter of ESP_GAP_BLE_ADV_DATA_RAW_SET_COMPLETE_EVT

struct *esp_ble_gap_cb_param_t*::*ble_scan_rsp_data_raw_cmpl_evt_param* **scan_rsp_data_raw_cmpl**

Event parameter of ESP_GAP_BLE_SCAN_RSP_DATA_RAW_SET_COMPLETE_EVT

struct *esp_ble_gap_cb_param_t*::*ble_adv_start_cmpl_evt_param* **adv_start_cmpl**

Event parameter of ESP_GAP_BLE_ADV_START_COMPLETE_EVT

struct *esp_ble_gap_cb_param_t*::*ble_scan_start_cmpl_evt_param* **scan_start_cmpl**

Event parameter of ESP_GAP_BLE_SCAN_START_COMPLETE_EVT

esp_ble_sec_t **ble_security**

ble gap security union type

struct *esp_ble_gap_cb_param_t*::*ble_scan_stop_cmpl_evt_param* **scan_stop_cmpl**

Event parameter of ESP_GAP_BLE_SCAN_STOP_COMPLETE_EVT

struct *esp_ble_gap_cb_param_t*::*ble_adv_stop_cmpl_evt_param* **adv_stop_cmpl**

Event parameter of ESP_GAP_BLE_ADV_STOP_COMPLETE_EVT

struct *esp_ble_gap_cb_param_t*::*ble_set_rand_cmpl_evt_param* **set_rand_addr_cmpl**

Event parameter of ESP_GAP_BLE_SET_STATIC_RAND_ADDR_EVT

struct *esp_ble_gap_cb_param_t*::*ble_update_conn_params_evt_param* **update_conn_params**

Event parameter of ESP_GAP_BLE_UPDATE_CONN_PARAMS_EVT

struct *esp_ble_gap_cb_param_t*::*ble_pkt_data_length_cmpl_evt_param* **pkt_data_lenth_cmpl**

Event parameter of ESP_GAP_BLE_SET_PKT_LENGTH_COMPLETE_EVT

struct *esp_ble_gap_cb_param_t*::*ble_local_privacy_cmpl_evt_param* **local_privacy_cmpl**

Event parameter of ESP_GAP_BLE_SET_LOCAL_PRIVACY_COMPLETE_EVT

struct *esp_ble_gap_cb_param_t*::*ble_remove_bond_dev_cmpl_evt_param* **remove_bond_dev_cmpl**

Event parameter of ESP_GAP_BLE_REMOVE_BOND_DEV_COMPLETE_EVT

struct *esp_ble_gap_cb_param_t*::*ble_clear_bond_dev_cmpl_evt_param* **clear_bond_dev_cmpl**

Event parameter of ESP_GAP_BLE_CLEAR_BOND_DEV_COMPLETE_EVT

struct *esp_ble_gap_cb_param_t*::*ble_get_bond_dev_cmpl_evt_param* **get_bond_dev_cmpl**

Event parameter of ESP_GAP_BLE_GET_BOND_DEV_COMPLETE_EVT

struct *esp_ble_gap_cb_param_t*::*ble_read_rssi_cmpl_evt_param* **read_rssi_cmpl**

Event parameter of ESP_GAP_BLE_READ_RSSI_COMPLETE_EVT

struct *esp_ble_gap_cb_param_t*::*ble_update_whitelist_cmpl_evt_param* **update_whitelist_cmpl**

Event parameter of ESP_GAP_BLE_UPDATE_WHITELIST_COMPLETE_EVT

struct *esp_ble_gap_cb_param_t*::*ble_update_duplicate_exceptional_list_cmpl_evt_param* **update_duplicate_exceptional_list_cmpl**

Event parameter of ESP_GAP_BLE_UPDATE_DUPLICATE_EXCEPTIONAL_LIST_COMPLETE_EVT

struct *esp_ble_gap_cb_param_t*::*ble_set_channels_evt_param* **ble_set_channels**

Event parameter of ESP_GAP_BLE_SET_CHANNELS_EVT

struct *esp_ble_gap_cb_param_t*::*ble_read_phy_cmpl_evt_param* **read_phy**

Event parameter of ESP_GAP_BLE_READ_PHY_COMPLETE_EVT

struct *esp_ble_gap_cb_param_t*::*ble_set_perf_def_phy_cmpl_evt_param* **set_perf_def_phy**

Event parameter of ESP_GAP_BLE_SET_PREFERED_DEFAULT_PHY_COMPLETE_EVT

struct *esp_ble_gap_cb_param_t*::*ble_set_perf_phy_cmpl_evt_param* **set_perf_phy**

Event parameter of ESP_GAP_BLE_SET_PREFERED_PHY_COMPLETE_EVT

struct *esp_ble_gap_cb_param_t*::*ble_ext_adv_set_rand_addr_cmpl_evt_param* **ext_adv_set_rand_addr**

Event parameter of ESP_GAP_BLE_EXT_ADV_SET_RAND_ADDR_COMPLETE_EVT

struct *esp_ble_gap_cb_param_t*::*ble_ext_adv_set_params_cmpl_evt_param* **ext_adv_set_params**

Event parameter of ESP_GAP_BLE_EXT_ADV_SET_PARAMS_COMPLETE_EVT

struct *esp_ble_gap_cb_param_t*::*ble_ext_adv_data_set_cmpl_evt_param* **ext_adv_data_set**

Event parameter of ESP_GAP_BLE_EXT_ADV_DATA_SET_COMPLETE_EVT

struct *esp_ble_gap_cb_param_t*::*ble_ext_adv_scan_rsp_set_cmpl_evt_param* **scan_rsp_set**

Event parameter of ESP_GAP_BLE_EXT_SCAN_RSP_DATA_SET_COMPLETE_EVT

struct *esp_ble_gap_cb_param_t*::*ble_ext_adv_start_cmpl_evt_param* **ext_adv_start**

Event parameter of ESP_GAP_BLE_EXT_ADV_START_COMPLETE_EVT

struct *esp_ble_gap_cb_param_t*::*ble_ext_adv_stop_cmpl_evt_param* **ext_adv_stop**

Event parameter of ESP_GAP_BLE_EXT_ADV_STOP_COMPLETE_EVT

struct *esp_ble_gap_cb_param_t*::*ble_ext_adv_set_remove_cmpl_evt_param* **ext_adv_remove**

Event parameter of ESP_GAP_BLE_EXT_ADV_SET_REMOVE_COMPLETE_EVT

struct *esp_ble_gap_cb_param_t*::*ble_ext_adv_set_clear_cmpl_evt_param* **ext_adv_clear**

Event parameter of ESP_GAP_BLE_EXT_ADV_SET_CLEAR_COMPLETE_EVT

struct *esp_ble_gap_cb_param_t*::*ble_periodic_adv_set_params_cmpl_param* **peroid_adv_set_params**

Event parameter of ESP_GAP_BLE_PERIODIC_ADV_SET_PARAMS_COMPLETE_EVT

struct *esp_ble_gap_cb_param_t*::*ble_periodic_adv_data_set_cmpl_param* **period_adv_data_set**

Event parameter of ESP_GAP_BLE_PERIODIC_ADV_DATA_SET_COMPLETE_EVT

struct *esp_ble_gap_cb_param_t*::*ble_periodic_adv_start_cmpl_param* **period_adv_start**

Event parameter of ESP_GAP_BLE_PERIODIC_ADV_START_COMPLETE_EVT

struct *esp_ble_gap_cb_param_t*::*ble_periodic_adv_stop_cmpl_param* **period_adv_stop**

Event parameter of ESP_GAP_BLE_PERIODIC_ADV_STOP_COMPLETE_EVT

struct *esp_ble_gap_cb_param_t*::*ble_period_adv_create_sync_cmpl_param* **period_adv_create_sync**

Event parameter of ESP_GAP_BLE_PERIODIC_ADV_CREATE_SYNC_COMPLETE_EVT

struct *esp_ble_gap_cb_param_t*::*ble_period_adv_sync_cancel_cmpl_param* **period_adv_sync_cancel**

Event parameter of ESP_GAP_BLE_PERIODIC_ADV_SYNC_CANCEL_COMPLETE_EVT

struct *esp_ble_gap_cb_param_t*::*ble_period_adv_sync_terminate_cmpl_param* **period_adv_sync_term**

Event parameter of ESP_GAP_BLE_PERIODIC_ADV_SYNC_TERMINATE_COMPLETE_EVT

struct *esp_ble_gap_cb_param_t*::*ble_period_adv_add_dev_cmpl_param* **period_adv_add_dev**

Event parameter of ESP_GAP_BLE_PERIODIC_ADV_ADD_DEV_COMPLETE_EVT

struct *esp_ble_gap_cb_param_t*::*ble_period_adv_remove_dev_cmpl_param* **period_adv_remove_dev**

Event parameter of ESP_GAP_BLE_PERIODIC_ADV_REMOVE_DEV_COMPLETE_EVT

struct *esp_ble_gap_cb_param_t*::*ble_period_adv_clear_dev_cmpl_param* **period_adv_clear_dev**

Event parameter of ESP_GAP_BLE_PERIODIC_ADV_CLEAR_DEV_COMPLETE_EVT

struct *esp_ble_gap_cb_param_t*::*ble_set_ext_scan_params_cmpl_param* **set_ext_scan_params**

Event parameter of ESP_GAP_BLE_SET_EXT_SCAN_PARAMS_COMPLETE_EVT

struct *esp_ble_gap_cb_param_t*::*ble_ext_scan_start_cmpl_param* **ext_scan_start**

Event parameter of ESP_GAP_BLE_EXT_SCAN_START_COMPLETE_EVT

struct *esp_ble_gap_cb_param_t*::*ble_ext_scan_stop_cmpl_param* **ext_scan_stop**

Event parameter of ESP_GAP_BLE_EXT_SCAN_STOP_COMPLETE_EVT

struct *esp_ble_gap_cb_param_t*::*ble_ext_conn_params_set_cmpl_param* **ext_conn_params_set**

Event parameter of ESP_GAP_BLE_PREFER_EXT_CONN_PARAMS_SET_COMPLETE_EVT

struct *esp_ble_gap_cb_param_t*::*ble_adv_terminate_param* **adv_terminate**

Event parameter of ESP_GAP_BLE_ADV_TERMINATED_EVT

struct *esp_ble_gap_cb_param_t*::*ble_scan_req_received_param* **scan_req_received**

Event parameter of ESP_GAP_BLE_SCAN_REQ_RECEIVED_EVT

struct *esp_ble_gap_cb_param_t*::*ble_channel_sel_alg_param* **channel_sel_alg**

Event parameter of ESP_GAP_BLE_CHANNEL_SELETE_ALGORITHM_EVT

struct *esp_ble_gap_cb_param_t*::*ble_periodic_adv_sync_lost_param* **periodic_adv_sync_lost**

Event parameter of ESP_GAP_BLE_PERIODIC_ADV_SYNC_LOST_EVT

struct *esp_ble_gap_cb_param_t*::*ble_periodic_adv_sync_estab_param* **periodic_adv_sync_estab**

Event parameter of ESP_GAP_BLE_PERIODIC_ADV_SYNC_ESTAB_EVT

struct *esp_ble_gap_cb_param_t*::*ble_phy_update_cmpl_param* **phy_update**

Event parameter of ESP_GAP_BLE_PHY_UPDATE_COMPLETE_EVT

struct *esp_ble_gap_cb_param_t*::*ble_ext_adv_report_param* **ext_adv_report**

Event parameter of ESP_GAP_BLE_EXT_ADV_REPORT_EVT

struct *esp_ble_gap_cb_param_t*::*ble_periodic_adv_report_param* **period_adv_report**

Event parameter of ESP_GAP_BLE_PERIODIC_ADV_REPORT_EVT

struct **ble_adv_data_cmpl_evt_param**

#include <esp_gap_ble_api.h> ESP_GAP_BLE_ADV_DATA_SET_COMPLETE_EVT.

Public Members

esp_bt_status_t **status**

Indicate the set advertising data operation success status

struct **ble_adv_data_raw_cmpl_evt_param**

#include <esp_gap_ble_api.h> ESP_GAP_BLE_ADV_DATA_RAW_SET_COMPLETE_EVT.

Public Members

esp_bt_status_t **status**

Indicate the set raw advertising data operation success status

struct **ble_adv_start_cmpl_evt_param**

#include <esp_gap_ble_api.h> ESP_GAP_BLE_ADV_START_COMPLETE_EVT.

Public Members

esp_bt_status_t **status**

Indicate advertising start operation success status

struct **ble_adv_stop_cmpl_evt_param**

#include <esp_gap_ble_api.h> ESP_GAP_BLE_ADV_STOP_COMPLETE_EVT.

Public Members

esp_bt_status_t **status**

Indicate adv stop operation success status

struct **ble_adv_terminate_param**

#include <esp_gap_ble_api.h> ESP_GAP_BLE_ADV_TERMINATED_EVT.

Public Members

uint8_t **status**

Indicate adv terminate status

uint8_t **adv_instance**

extend advertising handle

uint16_t **conn_idx**

connection index

uint8_t **completed_event**

the number of completed extend advertising events

struct **ble_channel_sel_alg_param**

#include <esp_gap_ble_api.h> ESP_GAP_BLE_CHANNEL_SELETE_ALGORITHM_EVT.

Public Members

uint16_t **conn_handle**

connection handle

uint8_t **channel_sel_alg**

channel selection algorithm

struct **ble_clear_bond_dev_cmpl_evt_param**

#include <esp_gap_ble_api.h> ESP_GAP_BLE_CLEAR_BOND_DEV_COMPLETE_EVT.

Public Members

esp_bt_status_t **status**

Indicate the clear bond device operation success status

struct **ble_ext_adv_data_set_cmpl_evt_param**

#include <esp_gap_ble_api.h> ESP_GAP_BLE_EXT_ADV_DATA_SET_COMPLETE_EVT.

Public Members

esp_bt_status_t **status**

Indicate extend advertising data set status

struct **ble_ext_adv_report_param**

#include <esp_gap_ble_api.h> ESP_GAP_BLE_EXT_ADV_REPORT_EVT.

Public Members

esp_ble_gap_ext_adv_reprot_t **params**

extend advertising report parameters

struct **ble_ext_adv_scan_rsp_set_cmpl_evt_param**

#include <esp_gap_ble_api.h> ESP_GAP_BLE_EXT_SCAN_RSP_DATA_SET_COMPLETE_EVT.

Public Members

esp_bt_status_t **status**

Indicate extend advertising sacn response data set status

struct **ble_ext_adv_set_clear_cmpl_evt_param**

#include <esp_gap_ble_api.h> ESP_GAP_BLE_EXT_ADV_SET_CLEAR_COMPLETE_EVT.

Public Members

esp_bt_status_t **status**

Indicate advertising stop operation success status

struct **ble_ext_adv_set_params_cmpl_evt_param**

#include <esp_gap_ble_api.h> ESP_GAP_BLE_EXT_ADV_SET_PARAMS_COMPLETE_EVT.

Public Members

esp_bt_status_t **status**

Indicate extend advertising parameters set status

struct **ble_ext_adv_set_rand_addr_cmpl_evt_param**

#include <esp_gap_ble_api.h> ESP_GAP_BLE_EXT_ADV_SET_RAND_ADDR_COMPLETE_EVT.

Public Members

esp_bt_status_t **status**

Indicate extend advertising random address set status

struct **ble_ext_adv_set_remove_cmpl_evt_param**

#include <esp_gap_ble_api.h> ESP_GAP_BLE_EXT_ADV_SET_REMOVE_COMPLETE_EVT.

Public Members

esp_bt_status_t **status**

Indicate advertising stop operation success status

struct **ble_ext_adv_start_cmpl_evt_param**

#include <esp_gap_ble_api.h> ESP_GAP_BLE_EXT_ADV_START_COMPLETE_EVT.

Public Members

esp_bt_status_t **status**

Indicate advertising start operation success status

struct **ble_ext_adv_stop_cmpl_evt_param**

#include <esp_gap_ble_api.h> ESP_GAP_BLE_EXT_ADV_STOP_COMPLETE_EVT.

Public Members

esp_bt_status_t **status**

Indicate advertising stop operation success status

struct **ble_ext_conn_params_set_cmpl_param**

#include <esp_gap_ble_api.h> ESP_GAP_BLE_PREFER_EXT_CONN_PARAMS_SET_COMPLETE_EVT.

Public Members

esp_bt_status_t **status**

Indicate extend connection parameters set status

struct **ble_ext_scan_start_cmpl_param**

#include <esp_gap_ble_api.h> ESP_GAP_BLE_EXT_SCAN_START_COMPLETE_EVT.

Public Members

esp_bt_status_t **status**

Indicate extend advertising start status

struct **ble_ext_scan_stop_cmpl_param**

#include <esp_gap_ble_api.h> ESP_GAP_BLE_EXT_SCAN_STOP_COMPLETE_EVT.

Public Members

esp_bt_status_t **status**

Indicate extend advertising stop status

struct **ble_get_bond_dev_cmpl_evt_param**

#include <esp_gap_ble_api.h> ESP_GAP_BLE_GET_BOND_DEV_COMPLETE_EVT.

Public Members

esp_bt_status_t **status**

Indicate the get bond device operation success status

uint8_t **dev_num**

Indicate the get number device in the bond list

esp_ble_bond_dev_t ***bond_dev**

the pointer to the bond device Structure

struct **ble_local_privacy_cmpl_evt_param**

#include <esp_gap_ble_api.h> ESP_GAP_BLE_SET_LOCAL_PRIVACY_COMPLETE_EVT.

Public Members

esp_bt_status_t **status**

Indicate the set local privacy operation success status

struct **ble_period_adv_add_dev_cmpl_param**

#include <esp_gap_ble_api.h> ESP_GAP_BLE_PERIODIC_ADV_ADD_DEV_COMPLETE_EVT.

Public Members

esp_bt_status_t **status**

Indicate periodic advertising device list add status

struct **ble_period_adv_clear_dev_cmpl_param**

#include <esp_gap_ble_api.h> ESP_GAP_BLE_PERIODIC_ADV_CLEAR_DEV_COMPLETE_EVT.

Public Members

esp_bt_status_t **status**

Indicate periodic advertising device list clean status

struct **ble_period_adv_create_sync_cmpl_param**

#include <esp_gap_ble_api.h> ESP_GAP_BLE_PERIODIC_ADV_CREATE_SYNC_COMPLETE_EVT.

Public Members

esp_bt_status_t **status**

Indicate periodic advertising create sync status

struct **ble_period_adv_remove_dev_cmpl_param**

#include <esp_gap_ble_api.h> ESP_GAP_BLE_PERIODIC_ADV_REMOVE_DEV_COMPLETE_EVT.

Public Members

esp_bt_status_t **status**

Indicate periodic advertising device list remove status

struct **ble_period_adv_sync_cancel_cmpl_param**

#include <esp_gap_ble_api.h> ESP_GAP_BLE_PERIODIC_ADV_SYNC_CANCEL_COMPLETE_EVT.

Public Members

esp_bt_status_t **status**

Indicate periodic advertising sync cancle status

struct **ble_period_adv_sync_terminate_cmpl_param**

#include <esp_gap_ble_api.h> ESP_GAP_BLE_PERIODIC_ADV_SYNC_TERMINATE_COMPLETE_EVT.

Public Members

esp_bt_status_t **status**

Indicate periodic advertising sync terminate status

struct **ble_periodic_adv_data_set_cmpl_param**

#include <esp_gap_ble_api.h> ESP_GAP_BLE_PERIODIC_ADV_DATA_SET_COMPLETE_EVT.

Public Members

esp_bt_status_t **status**

Indicate periodic advertising data set status

struct **ble_periodic_adv_report_param**

#include <esp_gap_ble_api.h> ESP_GAP_BLE_PERIODIC_ADV_REPORT_EVT.

Public Members

esp_ble_gap_periodic_adv_report_t **params**

periodic advertising report parameters

struct **ble_periodic_adv_set_params_cmpl_param**

#include <esp_gap_ble_api.h> ESP_GAP_BLE_PERIODIC_ADV_SET_PARAMS_COMPLETE_EVT.

Public Members

esp_bt_status_t **status**

Indicate periodic advertisingparameters set status

struct **ble_periodic_adv_start_cmpl_param**

#include <esp_gap_ble_api.h> ESP_GAP_BLE_PERIODIC_ADV_START_COMPLETE_EVT.

Public Members

esp_bt_status_t **status**

Indicate periodic advertising start status

struct **ble_periodic_adv_stop_cmpl_param**

#include <esp_gap_ble_api.h> ESP_GAP_BLE_PERIODIC_ADV_STOP_COMPLETE_EVT.

Public Members

esp_bt_status_t **status**

Indicate periodic advertising stop status

struct **ble_periodic_adv_sync_estab_param**

#include <esp_gap_ble_api.h> ESP_GAP_BLE_PERIODIC_ADV_SYNC_ESTAB_EVT.

Public Members

uint8_t **status**

periodic advertising sync status

uint16_t **sync_handle**

periodic advertising sync handle

uint8_t **sid**

periodic advertising sid

esp_ble_addr_type_t **adv_addr_type**

periodic advertising address type

esp_bd_addr_t **adv_addr**

periodic advertising address

esp_ble_gap_phy_t **adv_phy**

periodic advertising phy type

uint16_t **period_adv_interval**

periodic advertising interval

uint8_t **adv_clk_accuracy**

periodic advertising clock accuracy

struct **ble_periodic_adv_sync_lost_param**

#include <esp_gap_ble_api.h> ESP_GAP_BLE_PERIODIC_ADV_SYNC_LOST_EVT.

Public Members

uint16_t **sync_handle**

sync handle

struct **ble_phy_update_cmpl_param**

#include <esp_gap_ble_api.h> ESP_GAP_BLE_PHY_UPDATE_COMPLETE_EVT.

Public Members

esp_bt_status_t **status**

phy update status

esp_bd_addr_t **bda**

address

esp_ble_gap_phy_t **tx_phy**

tx phy type

esp_ble_gap_phy_t **rx_phy**

rx phy type

struct **ble_pkt_data_length_cmpl_evt_param**

#include <esp_gap_ble_api.h> ESP_GAP_BLE_SET_PKT_LENGTH_COMPLETE_EVT.

Public Members

esp_bt_status_t **status**

Indicate the set pkt data length operation success status

esp_ble_pkt_data_length_params_t **params**

pkt data length value

struct **ble_read_phy_cmpl_evt_param**

#include <esp_gap_ble_api.h> ESP_GAP_BLE_READ_PHY_COMPLETE_EVT.

Public Members

esp_bt_status_t **status**

read phy complete status

esp_bd_addr_t **bda**

read phy address

esp_ble_gap_phy_t **tx_phy**

tx phy type

esp_ble_gap_phy_t **rx_phy**

rx phy type

struct **ble_read_rssi_cmpl_evt_param**

#include <esp_gap_ble_api.h> ESP_GAP_BLE_READ_RSSI_COMPLETE_EVT.

Public Members

esp_bt_status_t **status**

Indicate the read adv tx power operation success status

int8_t **rssi**

The ble remote device rssi value, the range is from -127 to 20, the unit is dbm, if the RSSI cannot be read, the RSSI metric shall be set to 127.

esp_bd_addr_t **remote_addr**

The remote device address

struct **ble_remove_bond_dev_cmpl_evt_param**

#include <esp_gap_ble_api.h> ESP_GAP_BLE_REMOVE_BOND_DEV_COMPLETE_EVT.

Public Members

esp_bt_status_t **status**

Indicate the remove bond device operation success status

esp_bd_addr_t **bd_addr**

The device address which has been remove from the bond list

struct **ble_scan_param_cmpl_evt_param**

#include <esp_gap_ble_api.h> ESP_GAP_BLE_SCAN_PARAM_SET_COMPLETE_EVT.

Public Members

esp_bt_status_t **status**

Indicate the set scan param operation success status

struct **ble_scan_req_received_param**

#include <esp_gap_ble_api.h> ESP_GAP_BLE_SCAN_REQ_RECEIVED_EVT.

Public Members

uint8_t **adv_instance**

extend advertising handle

esp_ble_addr_type_t **scan_addr_type**

scanner address type

esp_bd_addr_t **scan_addr**

scanner address

struct **ble_scan_result_evt_param**

#include <esp_gap_ble_api.h> ESP_GAP_BLE_SCAN_RESULT_EVT.

Public Members

esp_gap_search_evt_t **search_evt**

Search event type

esp_bd_addr_t **bda**

Bluetooth device address which has been searched

esp_bt_dev_type_t **dev_type**

Device type

esp_ble_addr_type_t **ble_addr_type**

Ble device address type

esp_ble_evt_type_t **ble_evt_type**

Ble scan result event type

int **rssi**

Searched device’s RSSI

uint8_t **ble_adv**[31 + 31]

Received EIR

int **flag**

Advertising data flag bit

int **num_resps**

Scan result number

uint8_t **adv_data_len**

Adv data length

uint8_t **scan_rsp_len**

Scan response length

uint32_t **num_dis**

The number of discard packets

struct **ble_scan_rsp_data_cmpl_evt_param**

#include <esp_gap_ble_api.h> ESP_GAP_BLE_SCAN_RSP_DATA_SET_COMPLETE_EVT.

Public Members

esp_bt_status_t **status**

Indicate the set scan response data operation success status

struct **ble_scan_rsp_data_raw_cmpl_evt_param**

#include <esp_gap_ble_api.h> ESP_GAP_BLE_SCAN_RSP_DATA_RAW_SET_COMPLETE_EVT.

Public Members

esp_bt_status_t **status**

Indicate the set raw advertising data operation success status

struct **ble_scan_start_cmpl_evt_param**

#include <esp_gap_ble_api.h> ESP_GAP_BLE_SCAN_START_COMPLETE_EVT.

Public Members

esp_bt_status_t **status**

Indicate scan start operation success status

struct **ble_scan_stop_cmpl_evt_param**

#include <esp_gap_ble_api.h> ESP_GAP_BLE_SCAN_STOP_COMPLETE_EVT.

Public Members

esp_bt_status_t **status**

Indicate scan stop operation success status

struct **ble_set_channels_evt_param**

#include <esp_gap_ble_api.h> ESP_GAP_BLE_SET_CHANNELS_EVT.

Public Members

esp_bt_status_t **stat**

BLE set channel status

struct **ble_set_ext_scan_params_cmpl_param**

#include <esp_gap_ble_api.h> ESP_GAP_BLE_SET_EXT_SCAN_PARAMS_COMPLETE_EVT.

Public Members

esp_bt_status_t **status**

Indicate extend advertising parameters set status

struct **ble_set_perf_def_phy_cmpl_evt_param**

#include <esp_gap_ble_api.h> ESP_GAP_BLE_SET_PREFERED_DEFAULT_PHY_COMPLETE_EVT.

Public Members

esp_bt_status_t **status**

Indicate perf default phy set status

struct **ble_set_perf_phy_cmpl_evt_param**

#include <esp_gap_ble_api.h> ESP_GAP_BLE_SET_PREFERED_PHY_COMPLETE_EVT.

Public Members

esp_bt_status_t **status**

Indicate perf phy set status

struct **ble_set_rand_cmpl_evt_param**

#include <esp_gap_ble_api.h> ESP_GAP_BLE_SET_STATIC_RAND_ADDR_EVT.

Public Members

esp_bt_status_t **status**

Indicate set static rand address operation success status

struct **ble_update_conn_params_evt_param**

#include <esp_gap_ble_api.h> ESP_GAP_BLE_UPDATE_CONN_PARAMS_EVT.

Public Members

esp_bt_status_t **status**

Indicate update connection parameters success status

esp_bd_addr_t **bda**

Bluetooth device address

uint16_t **min_int**

Min connection interval

uint16_t **max_int**

Max connection interval

uint16_t **latency**

Slave latency for the connection in number of connection events. Range: 0x0000 to 0x01F3

uint16_t **conn_int**

Current connection interval

uint16_t **timeout**

Supervision timeout for the LE Link. Range: 0x000A to 0x0C80. Mandatory Range: 0x000A to 0x0C80 Time = N * 10 msec

struct **ble_update_duplicate_exceptional_list_cmpl_evt_param**

#include <esp_gap_ble_api.h> ESP_GAP_BLE_UPDATE_DUPLICATE_EXCEPTIONAL_LIST_COMPLETE_EVT.

Public Members

esp_bt_status_t **status**

Indicate update duplicate scan exceptional list operation success status

uint8_t **subcode**

Define in esp_bt_duplicate_exceptional_subcode_type_t

uint16_t **length**

The length of device_info

esp_duplicate_info_t **device_info**

device information, when subcode is ESP_BLE_DUPLICATE_EXCEPTIONAL_LIST_CLEAN, the value is invalid

struct **ble_update_whitelist_cmpl_evt_param**

#include <esp_gap_ble_api.h> ESP_GAP_BLE_UPDATE_WHITELIST_COMPLETE_EVT.

Public Members

esp_bt_status_t **status**

Indicate the add or remove whitelist operation success status

esp_ble_wl_opration_t **wl_opration**

The value is ESP_BLE_WHITELIST_ADD if add address to whitelist operation success, ESP_BLE_WHITELIST_REMOVE if remove address from the whitelist operation success

Structures

struct **esp_ble_adv_params_t**

Advertising parameters.

Public Members

uint16_t **adv_int_min**

Minimum advertising interval for undirected and low duty cycle directed advertising. Range: 0x0020 to 0x4000 Default: N = 0x0800 (1.28 second) Time = N * 0.625 msec Time Range: 20 ms to 10.24 sec

uint16_t **adv_int_max**

Maximum advertising interval for undirected and low duty cycle directed advertising. Range: 0x0020 to 0x4000 Default: N = 0x0800 (1.28 second) Time = N * 0.625 msec Time Range: 20 ms to 10.24 sec Advertising max interval

esp_ble_adv_type_t **adv_type**

Advertising type

esp_ble_addr_type_t **own_addr_type**

Owner bluetooth device address type

esp_bd_addr_t **peer_addr**

Peer device bluetooth device address

esp_ble_addr_type_t **peer_addr_type**

Peer device bluetooth device address type, only support public address type and random address type

esp_ble_adv_channel_t **channel_map**

Advertising channel map

esp_ble_adv_filter_t **adv_filter_policy**

Advertising filter policy

struct **esp_ble_adv_data_t**

Advertising data content, according to "Supplement to the Bluetooth Core Specification".

Public Members

bool **set_scan_rsp**

Set this advertising data as scan response or not

bool **include_name**

Advertising data include device name or not

bool **include_txpower**

Advertising data include TX power

int **min_interval**

Advertising data show slave preferred connection min interval. The connection interval in the following manner: connIntervalmin = Conn_Interval_Min * 1.25 ms Conn_Interval_Min range: 0x0006 to 0x0C80 Value of 0xFFFF indicates no specific minimum. Values not defined above are reserved for future use.

int **max_interval**

Advertising data show slave preferred connection max interval. The connection interval in the following manner: connIntervalmax = Conn_Interval_Max * 1.25 ms Conn_Interval_Max range: 0x0006 to 0x0C80 Conn_Interval_Max shall be equal to or greater than the Conn_Interval_Min. Value of 0xFFFF indicates no specific maximum. Values not defined above are reserved for future use.

int **appearance**

External appearance of device

uint16_t **manufacturer_len**

Manufacturer data length

uint8_t ***p_manufacturer_data**

Manufacturer data point

uint16_t **service_data_len**

Service data length

uint8_t ***p_service_data**

Service data point

uint16_t **service_uuid_len**

Service uuid length

uint8_t ***p_service_uuid**

Service uuid array point

uint8_t **flag**

Advertising flag of discovery mode, see BLE_ADV_DATA_FLAG detail

struct **esp_ble_scan_params_t**

Ble scan parameters.

Public Members

esp_ble_scan_type_t **scan_type**

Scan type

esp_ble_addr_type_t **own_addr_type**

Owner address type

esp_ble_scan_filter_t **scan_filter_policy**

Scan filter policy

uint16_t **scan_interval**

Scan interval. This is defined as the time interval from when the Controller started its last LE scan until it begins the subsequent LE scan. Range: 0x0004 to 0x4000 Default: 0x0010 (10 ms) Time = N * 0.625 msec Time Range: 2.5 msec to 10.24 seconds

uint16_t **scan_window**

Scan window. The duration of the LE scan. LE_Scan_Window shall be less than or equal to LE_Scan_Interval Range: 0x0004 to 0x4000 Default: 0x0010 (10 ms) Time = N * 0.625 msec Time Range: 2.5 msec to 10240 msec

esp_ble_scan_duplicate_t **scan_duplicate**

The Scan_Duplicates parameter controls whether the Link Layer should filter out duplicate advertising reports (BLE_SCAN_DUPLICATE_ENABLE) to the Host, or if the Link Layer should generate advertising reports for each packet received

struct **esp_gap_conn_params_t**

connection parameters information

Public Members

uint16_t **interval**

connection interval

uint16_t **latency**

Slave latency for the connection in number of connection events. Range: 0x0000 to 0x01F3

uint16_t **timeout**

Supervision timeout for the LE Link. Range: 0x000A to 0x0C80. Mandatory Range: 0x000A to 0x0C80 Time = N * 10 msec Time Range: 100 msec to 32 seconds

struct **esp_ble_conn_update_params_t**

Connection update parameters.

Public Members

esp_bd_addr_t **bda**

Bluetooth device address

uint16_t **min_int**

Min connection interval

uint16_t **max_int**

Max connection interval

uint16_t **latency**

Slave latency for the connection in number of connection events. Range: 0x0000 to 0x01F3

uint16_t **timeout**

Supervision timeout for the LE Link. Range: 0x000A to 0x0C80. Mandatory Range: 0x000A to 0x0C80 Time = N * 10 msec Time Range: 100 msec to 32 seconds

struct **esp_ble_pkt_data_length_params_t**

BLE pkt date length keys.

Public Members

uint16_t **rx_len**

pkt rx data length value

uint16_t **tx_len**

pkt tx data length value

struct **esp_ble_penc_keys_t**

BLE encryption keys.

Public Members

esp_bt_octet16_t **ltk**

The long term key

esp_bt_octet8_t **rand**

The random number

uint16_t **ediv**

The ediv value

uint8_t **sec_level**

The security level of the security link

uint8_t **key_size**

The key size(7~16) of the security link

struct **esp_ble_pcsrk_keys_t**

BLE CSRK keys.

Public Members

uint32_t **counter**

The counter

esp_bt_octet16_t **csrk**

The csrk key

uint8_t **sec_level**

The security level

struct **esp_ble_pid_keys_t**

BLE pid keys.

Public Members

esp_bt_octet16_t **irk**

The irk value

esp_ble_addr_type_t **addr_type**

The address type

esp_bd_addr_t **static_addr**

The static address

struct **esp_ble_lenc_keys_t**

BLE Encryption reproduction keys.

Public Members

esp_bt_octet16_t **ltk**

The long term key

uint16_t **div**

The div value

uint8_t **key_size**

The key size of the security link

uint8_t **sec_level**

The security level of the security link

struct **esp_ble_lcsrk_keys**

BLE SRK keys.

Public Members

uint32_t **counter**

The counter value

uint16_t **div**

The div value

uint8_t **sec_level**

The security level of the security link

esp_bt_octet16_t **csrk**

The csrk key value

struct **esp_ble_sec_key_notif_t**

Structure associated with ESP_KEY_NOTIF_EVT.

Public Members

esp_bd_addr_t **bd_addr**

peer address

uint32_t **passkey**

the numeric value for comparison. If just_works, do not show this number to UI

struct **esp_ble_sec_req_t**

Structure of the security request.

Public Members

esp_bd_addr_t **bd_addr**

peer address

struct **esp_ble_bond_key_info_t**

struct type of the bond key information value

Public Members

esp_ble_key_mask_t **key_mask**

the key mask to indicate witch key is present

esp_ble_penc_keys_t **penc_key**

received peer encryption key

esp_ble_pcsrk_keys_t **pcsrk_key**

received peer device SRK

esp_ble_pid_keys_t **pid_key**

peer device ID key

struct **esp_ble_bond_dev_t**

struct type of the bond device value

Public Members

esp_bd_addr_t **bd_addr**

peer address

esp_ble_bond_key_info_t **bond_key**

the bond key information

struct **esp_ble_key_t**

union type of the security key value

Public Members

esp_bd_addr_t **bd_addr**

peer address

esp_ble_key_type_t **key_type**

key type of the security link

esp_ble_key_value_t **p_key_value**

the pointer to the key value

struct **esp_ble_local_id_keys_t**

structure type of the ble local id keys value

Public Members

esp_bt_octet16_t **ir**

the 16 bits of the ir value

esp_bt_octet16_t **irk**

the 16 bits of the ir key value

esp_bt_octet16_t **dhk**

the 16 bits of the dh key value

struct **esp_ble_auth_cmpl_t**

Structure associated with ESP_AUTH_CMPL_EVT.

Public Members

esp_bd_addr_t **bd_addr**

BD address peer device.

bool **key_present**

Valid link key value in key element

esp_link_key **key**

Link key associated with peer device.

uint8_t **key_type**

The type of Link Key

bool **success**

TRUE of authentication succeeded, FALSE if failed.

uint8_t **fail_reason**

The HCI reason/error code for when success=FALSE

esp_ble_addr_type_t **addr_type**

Peer device address type

esp_bt_dev_type_t **dev_type**

Device type

esp_ble_auth_req_t **auth_mode**

authentication mode

struct **esp_ble_gap_ext_adv_params_t**

ext adv parameters

Public Members

esp_ble_ext_adv_type_mask_t **type**

ext adv type

uint32_t **interval_min**

ext adv minimum interval

uint32_t **interval_max**

ext adv maximum interval

esp_ble_adv_channel_t **channel_map**

ext adv channel map

esp_ble_addr_type_t **own_addr_type**

ext adv own addresss type

esp_ble_addr_type_t **peer_addr_type**

ext adv peer address type

esp_bd_addr_t **peer_addr**

ext adv peer address

esp_ble_adv_filter_t **filter_policy**

ext adv filter policy

int8_t **tx_power**

ext adv tx power

esp_ble_gap_pri_phy_t **primary_phy**

ext adv primary phy

uint8_t **max_skip**

ext adv maximum skip

esp_ble_gap_phy_t **secondary_phy**

ext adv secondary phy

uint8_t **sid**

ext adv sid

bool **scan_req_notif**

ext adv sacn request event notify

struct **esp_ble_ext_scan_cfg_t**

ext scan config

Public Members

esp_ble_scan_type_t **scan_type**

ext scan type

uint16_t **scan_interval**

ext scan interval

uint16_t **scan_window**

ext scan window

struct **esp_ble_ext_scan_params_t**

ext scan parameters

Public Members

esp_ble_addr_type_t **own_addr_type**

ext scan own addresss type

esp_ble_scan_filter_t **filter_policy**

ext scan filter policy

esp_ble_scan_duplicate_t **scan_duplicate**

ext scan duplicate scan

esp_ble_ext_scan_cfg_mask_t **cfg_mask**

ext scan config mask

esp_ble_ext_scan_cfg_t **uncoded_cfg**

ext scan uncoded config parameters

esp_ble_ext_scan_cfg_t **coded_cfg**

ext scan coded config parameters

struct **esp_ble_gap_conn_params_t**

create extend connection parameters

Public Members

uint16_t **scan_interval**
: init scan interval

uint16_t **scan_window**
: init scan window

uint16_t **interval_min**
: minimum interval

uint16_t **interval_max**
: maximum interval

uint16_t **latency**
: ext scan type

uint16_t **supervision_timeout**
: connection supervision timeout

uint16_t **min_ce_len**
: minimum ce length

uint16_t **max_ce_len**
: maximum ce length

struct **esp_ble_gap_ext_adv_t**
: extend adv enable parameters

Public Members

uint8_t **instance**
: advertising handle

int **duration**
: advertising duration

int **max_events**
: maximum number of extended advertising events

struct **esp_ble_gap_periodic_adv_params_t**
: periodic adv parameters

Public Members

uint16_t **interval_min**
: periodic advertising minimum interval

uint16_t **interval_max**

periodic advertising maximum interval

uint8_t **properties**

periodic advertising properties

struct **esp_ble_gap_periodic_adv_sync_params_t**

periodic adv sync parameters

Public Members

esp_ble_gap_sync_t **filter_policy**

periodic advertising sync filter policy

uint8_t **sid**

periodic advertising sid

esp_ble_addr_type_t **addr_type**

periodic advertising address type

esp_bd_addr_t **addr**

periodic advertising address

uint16_t **skip**

the maximum number of periodic advertising events that can be skipped

uint16_t **sync_timeout**

synchronization timeout

struct **esp_ble_gap_ext_adv_reprot_t**

extend adv report parameters

Public Members

esp_ble_gap_adv_type_t **event_type**

extend advertising type

uint8_t **addr_type**

extend advertising address type

esp_bd_addr_t **addr**

extend advertising address

esp_ble_gap_pri_phy_t **primary_phy**

extend advertising primary phy

esp_ble_gap_phy_t **secondly_phy**
extend advertising secondary phy

uint8_t **sid**
extend advertising sid

uint8_t **tx_power**
extend advertising tx power

int8_t **rssi**
extend advertising rssi

uint16_t **per_adv_interval**
periodic advertising interval

uint8_t **dir_addr_type**
direct address type

esp_bd_addr_t **dir_addr**
direct address

esp_ble_gap_ext_adv_data_status_t **data_status**
data type

uint8_t **adv_data_len**
extend advertising data length

uint8_t **adv_data**[251]
extend advertising data

struct **esp_ble_gap_periodic_adv_report_t**
periodic adv report parameters

Public Members

uint16_t **sync_handle**
periodic advertising train handle

uint8_t **tx_power**
periodic advertising tx power

int8_t **rssi**
periodic advertising rssi

esp_ble_gap_ext_adv_data_status_t **data_status**
periodic advertising data type

uint8_t **data_length**

periodic advertising data length

uint8_t **data**[251]

periodic advertising data

struct **esp_ble_gap_periodic_adv_sync_estab_t**

perodic adv sync establish parameters

Public Members

uint8_t **status**

periodic advertising sync status

uint16_t **sync_handle**

periodic advertising train handle

uint8_t **sid**

periodic advertising sid

esp_ble_addr_type_t **addr_type**

periodic advertising address type

esp_bd_addr_t **adv_addr**

periodic advertising address

esp_ble_gap_phy_t **adv_phy**

periodic advertising adv phy type

uint16_t **period_adv_interval**

periodic advertising interval

uint8_t **adv_clk_accuracy**

periodic advertising clock accuracy

Macros

ESP_BLE_ADV_FLAG_LIMIT_DISC

BLE_ADV_DATA_FLAG data flag bit definition used for advertising data flag.

ESP_BLE_ADV_FLAG_GEN_DISC

ESP_BLE_ADV_FLAG_BREDR_NOT_SPT

ESP_BLE_ADV_FLAG_DMT_CONTROLLER_SPT

ESP_BLE_ADV_FLAG_DMT_HOST_SPT

ESP_BLE_ADV_FLAG_NON_LIMIT_DISC

ESP_LE_KEY_NONE

relate to BTM_LE_KEY_xxx in stack/btm_api.h

No encryption key

ESP_LE_KEY_PENC

encryption key, encryption information of peer device

ESP_LE_KEY_PID

identity key of the peer device

ESP_LE_KEY_PCSRK

peer SRK

ESP_LE_KEY_PLK

Link key

ESP_LE_KEY_LLK

peer link key

ESP_LE_KEY_LENC

master role security information:div

ESP_LE_KEY_LID

master device ID key

ESP_LE_KEY_LCSRK

local CSRK has been deliver to peer

ESP_LE_AUTH_NO_BOND

relate to BTM_LE_AUTH_xxx in stack/btm_api.h

0 no bondingv

ESP_LE_AUTH_BOND

1 << 0 device in the bonding with peer

ESP_LE_AUTH_REQ_MITM

1 << 2 man in the middle attack

ESP_LE_AUTH_REQ_BOND_MITM

0101 banding with man in the middle attack

ESP_LE_AUTH_REQ_SC_ONLY

1 << 3 secure connection

ESP_LE_AUTH_REQ_SC_BOND

1001 secure connection with band

ESP_LE_AUTH_REQ_SC_MITM

1100 secure conn with MITM

ESP_LE_AUTH_REQ_SC_MITM_BOND

1101 SC with MITM and Bonding

ESP_BLE_ONLY_ACCEPT_SPECIFIED_AUTH_DISABLE

authentication disable

ESP_BLE_ONLY_ACCEPT_SPECIFIED_AUTH_ENABLE

authentication enable

ESP_BLE_OOB_DISABLE

disbale the out of bond

ESP_BLE_OOB_ENABLE

enable the out of bond

ESP_IO_CAP_OUT

relate to BTM_IO_CAP_xxx in stack/btm_api.h

DisplayOnly

ESP_IO_CAP_IO

DisplayYesNo

ESP_IO_CAP_IN

KeyboardOnly

ESP_IO_CAP_NONE

NoInputNoOutput

ESP_IO_CAP_KBDISP

Keyboard display

ESP_BLE_APPEARANCE_UNKNOWN

relate to BTM_BLE_APPEARANCE_UNKNOWN in stack/btm_ble_api.h

ESP_BLE_APPEARANCE_GENERIC_PHONE

relate to BTM_BLE_APPEARANCE_GENERIC_PHONE in stack/btm_ble_api.h

ESP_BLE_APPEARANCE_GENERIC_COMPUTER

relate to BTM_BLE_APPEARANCE_GENERIC_COMPUTER in stack/btm_ble_api.h

ESP_BLE_APPEARANCE_GENERIC_WATCH

relate to BTM_BLE_APPEARANCE_GENERIC_WATCH in stack/btm_ble_api.h

ESP_BLE_APPEARANCE_SPORTS_WATCH

relate to BTM_BLE_APPEARANCE_SPORTS_WATCH in stack/btm_ble_api.h

ESP_BLE_APPEARANCE_GENERIC_CLOCK

relate to BTM_BLE_APPEARANCE_GENERIC_CLOCK in stack/btm_ble_api.h

ESP_BLE_APPEARANCE_GENERIC_DISPLAY

relate to BTM_BLE_APPEARANCE_GENERIC_DISPLAY in stack/btm_ble_api.h

ESP_BLE_APPEARANCE_GENERIC_REMOTE

relate to BTM_BLE_APPEARANCE_GENERIC_REMOTE in stack/btm_ble_api.h

ESP_BLE_APPEARANCE_GENERIC_EYEGLASSES

relate to BTM_BLE_APPEARANCE_GENERIC_EYEGLASSES in stack/btm_ble_api.h

ESP_BLE_APPEARANCE_GENERIC_TAG

relate to BTM_BLE_APPEARANCE_GENERIC_TAG in stack/btm_ble_api.h

ESP_BLE_APPEARANCE_GENERIC_KEYRING

relate to BTM_BLE_APPEARANCE_GENERIC_KEYRING in stack/btm_ble_api.h

ESP_BLE_APPEARANCE_GENERIC_MEDIA_PLAYER

relate to BTM_BLE_APPEARANCE_GENERIC_MEDIA_PLAYER in stack/btm_ble_api.h

ESP_BLE_APPEARANCE_GENERIC_BARCODE_SCANNER

relate to BTM_BLE_APPEARANCE_GENERIC_BARCODE_SCANNER in stack/btm_ble_api.h

ESP_BLE_APPEARANCE_GENERIC_THERMOMETER

relate to BTM_BLE_APPEARANCE_GENERIC_THERMOMETER in stack/btm_ble_api.h

ESP_BLE_APPEARANCE_THERMOMETER_EAR

relate to BTM_BLE_APPEARANCE_THERMOMETER_EAR in stack/btm_ble_api.h

ESP_BLE_APPEARANCE_GENERIC_HEART_RATE

relate to BTM_BLE_APPEARANCE_GENERIC_HEART_RATE in stack/btm_ble_api.h

ESP_BLE_APPEARANCE_HEART_RATE_BELT

relate to BTM_BLE_APPEARANCE_HEART_RATE_BELT in stack/btm_ble_api.h

ESP_BLE_APPEARANCE_GENERIC_BLOOD_PRESSURE

relate to BTM_BLE_APPEARANCE_GENERIC_BLOOD_PRESSURE in stack/btm_ble_api.h

ESP_BLE_APPEARANCE_BLOOD_PRESSURE_ARM

relate to BTM_BLE_APPEARANCE_BLOOD_PRESSURE_ARM in stack/btm_ble_api.h

ESP_BLE_APPEARANCE_BLOOD_PRESSURE_WRIST

relate to BTM_BLE_APPEARANCE_BLOOD_PRESSURE_WRIST in stack/btm_ble_api.h

ESP_BLE_APPEARANCE_GENERIC_HID

relate to BTM_BLE_APPEARANCE_GENERIC_HID in stack/btm_ble_api.h

ESP_BLE_APPEARANCE_HID_KEYBOARD

relate to BTM_BLE_APPEARANCE_HID_KEYBOARD in stack/btm_ble_api.h

ESP_BLE_APPEARANCE_HID_MOUSE

relate to BTM_BLE_APPEARANCE_HID_MOUSE in stack/btm_ble_api.h

ESP_BLE_APPEARANCE_HID_JOYSTICK

relate to BTM_BLE_APPEARANCE_HID_JOYSTICK in stack/btm_ble_api.h

ESP_BLE_APPEARANCE_HID_GAMEPAD

relate to BTM_BLE_APPEARANCE_HID_GAMEPAD in stack/btm_ble_api.h

ESP_BLE_APPEARANCE_HID_DIGITIZER_TABLET

relate to BTM_BLE_APPEARANCE_HID_DIGITIZER_TABLET in stack/btm_ble_api.h

ESP_BLE_APPEARANCE_HID_CARD_READER

relate to BTM_BLE_APPEARANCE_HID_CARD_READER in stack/btm_ble_api.h

ESP_BLE_APPEARANCE_HID_DIGITAL_PEN

relate to BTM_BLE_APPEARANCE_HID_DIGITAL_PEN in stack/btm_ble_api.h

ESP_BLE_APPEARANCE_HID_BARCODE_SCANNER

relate to BTM_BLE_APPEARANCE_HID_BARCODE_SCANNER in stack/btm_ble_api.h

ESP_BLE_APPEARANCE_GENERIC_GLUCOSE

relate to BTM_BLE_APPEARANCE_GENERIC_GLUCOSE in stack/btm_ble_api.h

ESP_BLE_APPEARANCE_GENERIC_WALKING

relate to BTM_BLE_APPEARANCE_GENERIC_WALKING in stack/btm_ble_api.h

ESP_BLE_APPEARANCE_WALKING_IN_SHOE

relate to BTM_BLE_APPEARANCE_WALKING_IN_SHOE in stack/btm_ble_api.h

ESP_BLE_APPEARANCE_WALKING_ON_SHOE

relate to BTM_BLE_APPEARANCE_WALKING_ON_SHOE in stack/btm_ble_api.h

ESP_BLE_APPEARANCE_WALKING_ON_HIP

relate to BTM_BLE_APPEARANCE_WALKING_ON_HIP in stack/btm_ble_api.h

ESP_BLE_APPEARANCE_GENERIC_CYCLING

relate to BTM_BLE_APPEARANCE_GENERIC_CYCLING in stack/btm_ble_api.h

ESP_BLE_APPEARANCE_CYCLING_COMPUTER

relate to BTM_BLE_APPEARANCE_CYCLING_COMPUTER in stack/btm_ble_api.h

ESP_BLE_APPEARANCE_CYCLING_SPEED

relate to BTM_BLE_APPEARANCE_CYCLING_SPEED in stack/btm_ble_api.h

ESP_BLE_APPEARANCE_CYCLING_CADENCE

relate to BTM_BLE_APPEARANCE_CYCLING_CADENCE in stack/btm_ble_api.h

ESP_BLE_APPEARANCE_CYCLING_POWER

relate to BTM_BLE_APPEARANCE_CYCLING_POWER in stack/btm_ble_api.h

ESP_BLE_APPEARANCE_CYCLING_SPEED_CADENCE

relate to BTM_BLE_APPEARANCE_CYCLING_SPEED_CADENCE in stack/btm_ble_api.h

ESP_BLE_APPEARANCE_GENERIC_PULSE_OXIMETER

relate to BTM_BLE_APPEARANCE_GENERIC_PULSE_OXIMETER in stack/btm_ble_api.h

ESP_BLE_APPEARANCE_PULSE_OXIMETER_FINGERTIP

relate to BTM_BLE_APPEARANCE_PULSE_OXIMETER_FINGERTIP in stack/btm_ble_api.h

ESP_BLE_APPEARANCE_PULSE_OXIMETER_WRIST

relate to BTM_BLE_APPEARANCE_PULSE_OXIMETER_WRIST in stack/btm_ble_api.h

ESP_BLE_APPEARANCE_GENERIC_WEIGHT

relate to BTM_BLE_APPEARANCE_GENERIC_WEIGHT in stack/btm_ble_api.h

ESP_BLE_APPEARANCE_GENERIC_PERSONAL_MOBILITY_DEVICE

relate to BTM_BLE_APPEARANCE_GENERIC_PERSONAL_MOBILITY_DEVICE in stack/btm_ble_api.h

ESP_BLE_APPEARANCE_POWERED_WHEELCHAIR

relate to BTM_BLE_APPEARANCE_POWERED_WHEELCHAIR in stack/btm_ble_api.h

ESP_BLE_APPEARANCE_MOBILITY_SCOOTER

relate to BTM_BLE_APPEARANCE_MOBILITY_SCOOTER in stack/btm_ble_api.h

ESP_BLE_APPEARANCE_GENERIC_CONTINUOUS_GLUCOSE_MONITOR

relate to BTM_BLE_APPEARANCE_GENERIC_CONTINUOUS_GLUCOSE_MONITOR in stack/btm_ble_api.h

ESP_BLE_APPEARANCE_GENERIC_INSULIN_PUMP

relate to BTM_BLE_APPEARANCE_GENERIC_INSULIN_PUMP in stack/btm_ble_api.h

ESP_BLE_APPEARANCE_INSULIN_PUMP_DURABLE_PUMP

relate to BTM_BLE_APPEARANCE_INSULIN_PUMP_DURABLE_PUMP in stack/btm_ble_api.h

ESP_BLE_APPEARANCE_INSULIN_PUMP_PATCH_PUMP

relate to BTM_BLE_APPEARANCE_INSULIN_PUMP_PATCH_PUMP in stack/btm_ble_api.h

ESP_BLE_APPEARANCE_INSULIN_PEN

relate to BTM_BLE_APPEARANCE_INSULIN_PEN in stack/btm_ble_api.h

ESP_BLE_APPEARANCE_GENERIC_MEDICATION_DELIVERY

relate to BTM_BLE_APPEARANCE_GENERIC_MEDICATION_DELIVERY in stack/btm_ble_api.h

ESP_BLE_APPEARANCE_GENERIC_OUTDOOR_SPORTS

relate to BTM_BLE_APPEARANCE_GENERIC_OUTDOOR_SPORTS in stack/btm_ble_api.h

ESP_BLE_APPEARANCE_OUTDOOR_SPORTS_LOCATION

relate to BTM_BLE_APPEARANCE_OUTDOOR_SPORTS_LOCATION in stack/btm_ble_api.h

ESP_BLE_APPEARANCE_OUTDOOR_SPORTS_LOCATION_AND_NAV

relate to BTM_BLE_APPEARANCE_OUTDOOR_SPORTS_LOCATION_AND_NAV in stack/btm_ble_api.h

ESP_BLE_APPEARANCE_OUTDOOR_SPORTS_LOCATION_POD

relate to BTM_BLE_APPEARANCE_OUTDOOR_SPORTS_LOCATION_POD in stack/btm_ble_api.h

ESP_BLE_APPEARANCE_OUTDOOR_SPORTS_LOCATION_POD_AND_NAV

relate to BTM_BLE_APPEARANCE_OUTDOOR_SPORTS_LOCATION_POD_AND_NAV in stack/btm_ble_api.h

ESP_GAP_BLE_CHANNELS_LEN

channel length

ESP_GAP_BLE_ADD_WHITELIST_COMPLETE_EVT

This is the old name, just for backwards compatibility.

ESP_BLE_ADV_DATA_LEN_MAX

Advertising data maximum length.

ESP_BLE_SCAN_RSP_DATA_LEN_MAX

Scan response data maximum length.

BLE_BIT(n)

ESP_BLE_GAP_SET_EXT_ADV_PROP_NONCONN_NONSCANNABLE_UNDIRECTED

Non-Connectable and Non-Scannable Undirected advertising

ESP_BLE_GAP_SET_EXT_ADV_PROP_CONNECTABLE

Connectable advertising

ESP_BLE_GAP_SET_EXT_ADV_PROP_SCANNABLE

Scannable advertising

ESP_BLE_GAP_SET_EXT_ADV_PROP_DIRECTED

Directed advertising

ESP_BLE_GAP_SET_EXT_ADV_PROP_HD_DIRECTED

High Duty Cycle Directed Connectable advertising (<= 3.75 ms Advertising Interval)

ESP_BLE_GAP_SET_EXT_ADV_PROP_LEGACY

Use legacy advertising PDUs

ESP_BLE_GAP_SET_EXT_ADV_PROP_ANON_ADV

Omit advertiser’ s address from all PDUs (“anonymous advertising”)

ESP_BLE_GAP_SET_EXT_ADV_PROP_INCLUDE_TX_PWR

Include TxPower in the extended header of the advertising PDU

ESP_BLE_GAP_SET_EXT_ADV_PROP_MASK

Reserved for future use If extended advertising PDU types are being used (bit 4 = 0) then: The advertisement shall not be both connectable and scannable. High duty cycle directed connectable advertising (<= 3.75 ms advertising interval) shall not be used (bit 3 = 0)ADV_IND

ESP_BLE_GAP_SET_EXT_ADV_PROP_LEGACY_IND

ADV_DIRECT_IND (low duty cycle)

ESP_BLE_GAP_SET_EXT_ADV_PROP_LEGACY_LD_DIR

ADV_DIRECT_IND (high duty cycle)

ESP_BLE_GAP_SET_EXT_ADV_PROP_LEGACY_HD_DIR

ADV_SCAN_IND

ESP_BLE_GAP_SET_EXT_ADV_PROP_LEGACY_SCAN

ADV_NONCONN_IND

ESP_BLE_GAP_SET_EXT_ADV_PROP_LEGACY_NONCONN

ESP_BLE_GAP_PHY_1M

Secondery Advertisement PHY is LE1M

ESP_BLE_GAP_PHY_2M

Secondery Advertisement PHY is LE2M

ESP_BLE_GAP_PHY_CODED

Secondery Advertisement PHY is LE Coded

ESP_BLE_GAP_NO_PREFER_TRANSMIT_PHY

No Prefer TX PHY supported by controller

ESP_BLE_GAP_NO_PREFER_RECEIVE_PHY

No Prefer RX PHY supported by controller

ESP_BLE_GAP_PRI_PHY_1M

Primary phy only support 1M and LE coded phy.

Primary Phy is LE1M

ESP_BLE_GAP_PRI_PHY_CODED

Primary Phy is LE CODED

ESP_BLE_GAP_PHY_1M_PREF_MASK

The Host prefers use the LE1M transmitter or reciever PHY

ESP_BLE_GAP_PHY_2M_PREF_MASK

The Host prefers use the LE2M transmitter or reciever PHY

ESP_BLE_GAP_PHY_CODED_PREF_MASK

The Host prefers use the LE CODED transmitter or reciever PHY

ESP_BLE_GAP_PHY_OPTIONS_NO_PREF

The Host has no preferred coding when transmitting on the LE Coded PHY

ESP_BLE_GAP_PHY_OPTIONS_PREF_S2_CODING

The Host prefers that S=2 coding be used when transmitting on the LE Coded PHY

ESP_BLE_GAP_PHY_OPTIONS_PREF_S8_CODING

The Host prefers that S=8 coding be used when transmitting on the LE Coded PHY

ESP_BLE_GAP_EXT_SCAN_CFG_UNCODE_MASK

Scan Advertisements on the LE1M PHY

ESP_BLE_GAP_EXT_SCAN_CFG_CODE_MASK

Scan advertisements on the LE coded PHY

ESP_BLE_GAP_EXT_ADV_DATA_COMPLETE

Advertising data.

extended advertising data compete

ESP_BLE_GAP_EXT_ADV_DATA_INCOMPLETE

extended advertising data incomplete

ESP_BLE_GAP_EXT_ADV_DATA_TRUNCATED

extended advertising data truncated mode

ESP_BLE_GAP_SYNC_POLICY_BY_ADV_INFO

Advertising SYNC policy.

sync policy by advertising info

ESP_BLE_GAP_SYNC_POLICY_BY_PERIODIC_LIST

periodic advertising sync policy

ESP_BLE_ADV_REPORT_EXT_ADV_IND

Advertising report.

advertising report with extended advertising indication type

ESP_BLE_ADV_REPORT_EXT_SCAN_IND

advertising report with extended scan indication type

ESP_BLE_ADV_REPORT_EXT_DIRECT_ADV

advertising report with extended direct advertising indication type

ESP_BLE_ADV_REPORT_EXT_SCAN_RSP
advertising report with extended scan response indication type Bluetooth 5.0, Vol 2, Part E, 7.7.65.13

ESP_BLE_LEGACY_ADV_TYPE_IND
advertising report with legacy advertising indication type

ESP_BLE_LEGACY_ADV_TYPE_DIRECT_IND
advertising report with legacy direct indication type

ESP_BLE_LEGACY_ADV_TYPE_SCAN_IND
advertising report with legacy scan indication type

ESP_BLE_LEGACY_ADV_TYPE_NONCON_IND
advertising report with legacy non connectable indication type

ESP_BLE_LEGACY_ADV_TYPE_SCAN_RSP_TO_ADV_IND
advertising report with legacy scan response indication type

ESP_BLE_LEGACY_ADV_TYPE_SCAN_RSP_TO_ADV_SCAN_IND
advertising report with legacy advertising with scan response indication type

EXT_ADV_TX_PWR_NO_PREFERENCE
Extend advertising tx power, range: [-127, +126] dBm.

host has no preference for tx power

Type Definitions

typedef uint8_t **esp_ble_key_type_t**

typedef uint8_t **esp_ble_auth_req_t**
combination of the above bit pattern

typedef uint8_t **esp_ble_io_cap_t**
combination of the io capability

typedef uint8_t **esp_gap_ble_channels**[5]

typedef uint8_t **esp_duplicate_info_t**[6]

typedef uint16_t **esp_ble_ext_adv_type_mask_t**

typedef uint8_t **esp_ble_gap_phy_t**

typedef uint8_t **esp_ble_gap_all_phys_t**

typedef uint8_t **esp_ble_gap_pri_phy_t**

typedef uint8_t **esp_ble_gap_phy_mask_t**

typedef uint16_t **esp_ble_gap_prefer_phy_options_t**

typedef uint8_t **esp_ble_ext_scan_cfg_mask_t**

typedef uint8_t **esp_ble_gap_ext_adv_data_status_t**

typedef uint8_t **esp_ble_gap_sync_t**

typedef uint8_t **esp_ble_gap_adv_type_t**

typedef void (***esp_gap_ble_cb_t**)(*esp_gap_ble_cb_event_t* event, *esp_ble_gap_cb_param_t* *param)

GAP callback function type.

Param event : Event type
Param param : Point to callback parameter, currently is union type

Enumerations

enum **esp_gap_ble_cb_event_t**

GAP BLE callback event type.

Values:

enumerator **ESP_GAP_BLE_ADV_DATA_SET_COMPLETE_EVT**

When advertising data set complete, the event comes

enumerator **ESP_GAP_BLE_SCAN_RSP_DATA_SET_COMPLETE_EVT**

When scan response data set complete, the event comes

enumerator **ESP_GAP_BLE_SCAN_PARAM_SET_COMPLETE_EVT**

When scan parameters set complete, the event comes

enumerator **ESP_GAP_BLE_SCAN_RESULT_EVT**

When one scan result ready, the event comes each time

enumerator **ESP_GAP_BLE_ADV_DATA_RAW_SET_COMPLETE_EVT**

When raw advertising data set complete, the event comes

enumerator **ESP_GAP_BLE_SCAN_RSP_DATA_RAW_SET_COMPLETE_EVT**

When raw advertising data set complete, the event comes

enumerator **ESP_GAP_BLE_ADV_START_COMPLETE_EVT**

When start advertising complete, the event comes

enumerator **ESP_GAP_BLE_SCAN_START_COMPLETE_EVT**

When start scan complete, the event comes

enumerator **ESP_GAP_BLE_AUTH_CMPL_EVT**

Authentication complete indication.

enumerator **ESP_GAP_BLE_KEY_EVT**

BLE key event for peer device keys

enumerator **ESP_GAP_BLE_SEC_REQ_EVT**

BLE security request

enumerator **ESP_GAP_BLE_PASSKEY_NOTIF_EVT**

passkey notification event

enumerator **ESP_GAP_BLE_PASSKEY_REQ_EVT**

passkey request event

enumerator **ESP_GAP_BLE_OOB_REQ_EVT**

OOB request event

enumerator **ESP_GAP_BLE_LOCAL_IR_EVT**

BLE local IR (identity Root 128-bit random static value used to generate Long Term Key) event

enumerator **ESP_GAP_BLE_LOCAL_ER_EVT**

BLE local ER (Encryption Root vakue used to genrate identity resolving key) event

enumerator **ESP_GAP_BLE_NC_REQ_EVT**

Numeric Comparison request event

enumerator **ESP_GAP_BLE_ADV_STOP_COMPLETE_EVT**

When stop adv complete, the event comes

enumerator **ESP_GAP_BLE_SCAN_STOP_COMPLETE_EVT**

When stop scan complete, the event comes

enumerator **ESP_GAP_BLE_SET_STATIC_RAND_ADDR_EVT**

When set the static rand address complete, the event comes

enumerator **ESP_GAP_BLE_UPDATE_CONN_PARAMS_EVT**

When update connection parameters complete, the event comes

enumerator **ESP_GAP_BLE_SET_PKT_LENGTH_COMPLETE_EVT**

When set pkt length complete, the event comes

enumerator **ESP_GAP_BLE_SET_LOCAL_PRIVACY_COMPLETE_EVT**

When Enable/disable privacy on the local device complete, the event comes

enumerator **ESP_GAP_BLE_REMOVE_BOND_DEV_COMPLETE_EVT**

When remove the bond device complete, the event comes

enumerator **ESP_GAP_BLE_CLEAR_BOND_DEV_COMPLETE_EVT**

When clear the bond device clear complete, the event comes

enumerator **ESP_GAP_BLE_GET_BOND_DEV_COMPLETE_EVT**

When get the bond device list complete, the event comes

enumerator **ESP_GAP_BLE_READ_RSSI_COMPLETE_EVT**

When read the rssi complete, the event comes

enumerator **ESP_GAP_BLE_UPDATE_WHITELIST_COMPLETE_EVT**

When add or remove whitelist complete, the event comes

enumerator **ESP_GAP_BLE_UPDATE_DUPLICATE_EXCEPTIONAL_LIST_COMPLETE_EVT**

When update duplicate exceptional list complete, the event comes

enumerator **ESP_GAP_BLE_SET_CHANNELS_EVT**

When setting BLE channels complete, the event comes

enumerator **ESP_GAP_BLE_READ_PHY_COMPLETE_EVT**

when reading phy complete, this event comes

enumerator **ESP_GAP_BLE_SET_PREFERED_DEFAULT_PHY_COMPLETE_EVT**

when preferred default phy complete, this event comes

enumerator **ESP_GAP_BLE_SET_PREFERED_PHY_COMPLETE_EVT**

when preferred phy complete , this event comes

enumerator **ESP_GAP_BLE_EXT_ADV_SET_RAND_ADDR_COMPLETE_EVT**

when extended set random address complete, the event comes

enumerator **ESP_GAP_BLE_EXT_ADV_SET_PARAMS_COMPLETE_EVT**

when extended advertising parameter complete, the event comes

enumerator **ESP_GAP_BLE_EXT_ADV_DATA_SET_COMPLETE_EVT**

when extended advertising data complete, the event comes

enumerator **ESP_GAP_BLE_EXT_SCAN_RSP_DATA_SET_COMPLETE_EVT**

when extended scan response data complete, the event comes

enumerator **ESP_GAP_BLE_EXT_ADV_START_COMPLETE_EVT**

when extended advertising start complete, the event comes

enumerator **ESP_GAP_BLE_EXT_ADV_STOP_COMPLETE_EVT**

when extended advertising stop complete, the event comes

enumerator **ESP_GAP_BLE_EXT_ADV_SET_REMOVE_COMPLETE_EVT**

when extended advertising set remove complete, the event comes

enumerator **ESP_GAP_BLE_EXT_ADV_SET_CLEAR_COMPLETE_EVT**

when extended advertising set clear complete, the event comes

enumerator **ESP_GAP_BLE_PERIODIC_ADV_SET_PARAMS_COMPLETE_EVT**
when periodic advertising parameter complete, the event comes

enumerator **ESP_GAP_BLE_PERIODIC_ADV_DATA_SET_COMPLETE_EVT**
when periodic advertising data complete, the event comes

enumerator **ESP_GAP_BLE_PERIODIC_ADV_START_COMPLETE_EVT**
when periodic advertising start complete, the event comes

enumerator **ESP_GAP_BLE_PERIODIC_ADV_STOP_COMPLETE_EVT**
when periodic advertising stop complete, the event comes

enumerator **ESP_GAP_BLE_PERIODIC_ADV_CREATE_SYNC_COMPLETE_EVT**
when periodic advertising create sync complete, the event comes

enumerator **ESP_GAP_BLE_PERIODIC_ADV_SYNC_CANCEL_COMPLETE_EVT**
when extended advertising sync cancel complete, the event comes

enumerator **ESP_GAP_BLE_PERIODIC_ADV_SYNC_TERMINATE_COMPLETE_EVT**
when extended advertising sync terminate complete, the event comes

enumerator **ESP_GAP_BLE_PERIODIC_ADV_ADD_DEV_COMPLETE_EVT**
when extended advertising add device complete , the event comes

enumerator **ESP_GAP_BLE_PERIODIC_ADV_REMOVE_DEV_COMPLETE_EVT**
when extended advertising remove device complete, the event comes

enumerator **ESP_GAP_BLE_PERIODIC_ADV_CLEAR_DEV_COMPLETE_EVT**
when extended advertising clear device, the event comes

enumerator **ESP_GAP_BLE_SET_EXT_SCAN_PARAMS_COMPLETE_EVT**
when extended scan parameter complete, the event comes

enumerator **ESP_GAP_BLE_EXT_SCAN_START_COMPLETE_EVT**
when extended scan start complete, the event comes

enumerator **ESP_GAP_BLE_EXT_SCAN_STOP_COMPLETE_EVT**
when extended scan stop complete, the event comes

enumerator **ESP_GAP_BLE_PREFER_EXT_CONN_PARAMS_SET_COMPLETE_EVT**
when extended prefer connection parameter set complete, the event comes

enumerator **ESP_GAP_BLE_PHY_UPDATE_COMPLETE_EVT**
when ble phy update complete, the event comes

enumerator **ESP_GAP_BLE_EXT_ADV_REPORT_EVT**
when extended advertising report complete, the event comes

enumerator **ESP_GAP_BLE_SCAN_TIMEOUT_EVT**

when scan timeout complete, the event comes

enumerator **ESP_GAP_BLE_ADV_TERMINATED_EVT**

when advertising terminate data complete, the event comes

enumerator **ESP_GAP_BLE_SCAN_REQ_RECEIVED_EVT**

when scan req received complete, the event comes

enumerator **ESP_GAP_BLE_CHANNEL_SELETE_ALGORITHM_EVT**

when channel select algorithm complete, the event comes

enumerator **ESP_GAP_BLE_PERIODIC_ADV_REPORT_EVT**

when periodic report advertising complete, the event comes

enumerator **ESP_GAP_BLE_PERIODIC_ADV_SYNC_LOST_EVT**

when periodic advertising sync lost complete, the event comes

enumerator **ESP_GAP_BLE_PERIODIC_ADV_SYNC_ESTAB_EVT**

when periodic advertising sync establish complete, the event comes

enumerator **ESP_GAP_BLE_EVT_MAX**

when maximum advertising event complete, the event comes

enum **esp_ble_adv_data_type**

The type of advertising data(not adv_type)

Values:

enumerator **ESP_BLE_AD_TYPE_FLAG**

enumerator **ESP_BLE_AD_TYPE_16SRV_PART**

enumerator **ESP_BLE_AD_TYPE_16SRV_CMPL**

enumerator **ESP_BLE_AD_TYPE_32SRV_PART**

enumerator **ESP_BLE_AD_TYPE_32SRV_CMPL**

enumerator **ESP_BLE_AD_TYPE_128SRV_PART**

enumerator **ESP_BLE_AD_TYPE_128SRV_CMPL**

enumerator **ESP_BLE_AD_TYPE_NAME_SHORT**

enumerator **ESP_BLE_AD_TYPE_NAME_CMPL**

enumerator **ESP_BLE_AD_TYPE_TX_PWR**

enumerator **ESP_BLE_AD_TYPE_DEV_CLASS**

enumerator **ESP_BLE_AD_TYPE_SM_TK**

enumerator **ESP_BLE_AD_TYPE_SM_OOB_FLAG**

enumerator **ESP_BLE_AD_TYPE_INT_RANGE**

enumerator **ESP_BLE_AD_TYPE_SOL_SRV_UUID**

enumerator **ESP_BLE_AD_TYPE_128SOL_SRV_UUID**

enumerator **ESP_BLE_AD_TYPE_SERVICE_DATA**

enumerator **ESP_BLE_AD_TYPE_PUBLIC_TARGET**

enumerator **ESP_BLE_AD_TYPE_RANDOM_TARGET**

enumerator **ESP_BLE_AD_TYPE_APPEARANCE**

enumerator **ESP_BLE_AD_TYPE_ADV_INT**

enumerator **ESP_BLE_AD_TYPE_LE_DEV_ADDR**

enumerator **ESP_BLE_AD_TYPE_LE_ROLE**

enumerator **ESP_BLE_AD_TYPE_SPAIR_C256**

enumerator **ESP_BLE_AD_TYPE_SPAIR_R256**

enumerator **ESP_BLE_AD_TYPE_32SOL_SRV_UUID**

enumerator **ESP_BLE_AD_TYPE_32SERVICE_DATA**

enumerator **ESP_BLE_AD_TYPE_128SERVICE_DATA**

enumerator **ESP_BLE_AD_TYPE_LE_SECURE_CONFIRM**

enumerator **ESP_BLE_AD_TYPE_LE_SECURE_RANDOM**

enumerator **ESP_BLE_AD_TYPE_URI**

enumerator **ESP_BLE_AD_TYPE_INDOOR_POSITION**

enumerator **ESP_BLE_AD_TYPE_TRANS_DISC_DATA**

enumerator **ESP_BLE_AD_TYPE_LE_SUPPORT_FEATURE**

enumerator **ESP_BLE_AD_TYPE_CHAN_MAP_UPDATE**

enumerator **ESP_BLE_AD_MANUFACTURER_SPECIFIC_TYPE**

enum **esp_ble_adv_type_t**

Advertising mode.

Values:

enumerator **ADV_TYPE_IND**

enumerator **ADV_TYPE_DIRECT_IND_HIGH**

enumerator **ADV_TYPE_SCAN_IND**

enumerator **ADV_TYPE_NONCONN_IND**

enumerator **ADV_TYPE_DIRECT_IND_LOW**

enum **esp_ble_adv_channel_t**

Advertising channel mask.

Values:

enumerator **ADV_CHNL_37**

enumerator **ADV_CHNL_38**

enumerator **ADV_CHNL_39**

enumerator **ADV_CHNL_ALL**

enum **esp_ble_adv_filter_t**

Values:

enumerator **ADV_FILTER_ALLOW_SCAN_ANY_CON_ANY**

Allow both scan and connection requests from anyone.

enumerator **ADV_FILTER_ALLOW_SCAN_WLST_CON_ANY**

Allow both scan req from White List devices only and connection req from anyone.

enumerator **ADV_FILTER_ALLOW_SCAN_ANY_CON_WLST**

Allow both scan req from anyone and connection req from White List devices only.

enumerator **ADV_FILTER_ALLOW_SCAN_WLST_CON_WLST**

Allow scan and connection requests from White List devices only.

enum **esp_ble_sec_act_t**

Values:

enumerator **ESP_BLE_SEC_ENCRYPT**

relate to BTA_DM_BLE_SEC_ENCRYPT in bta/bta_api.h. If the device has already bonded, the stack will used Long Term Key (LTK) to encrypt with the remote device directly. Else if the device hasn't bonded, the stack will used the default authentication request used the esp_ble_gap_set_security_param function set by the user.

enumerator **ESP_BLE_SEC_ENCRYPT_NO_MITM**

relate to BTA_DM_BLE_SEC_ENCRYPT_NO_MITM in bta/bta_api.h. If the device has been already bonded, the stack will check the LTK (Long Term Key) Whether the authentication request has been met, and if met, use the LTK to encrypt with the remote device directly, else re-pair with the remote device. Else if the device hasn't been bonded, the stack will use NO MITM authentication request in the current link instead of using the authreq in the esp_ble_gap_set_security_param function set by the user.

enumerator **ESP_BLE_SEC_ENCRYPT_MITM**

relate to BTA_DM_BLE_SEC_ENCRYPT_MITM in bta/bta_api.h. If the device has been already bonded, the stack will check the LTK (Long Term Key) whether the authentication request has been met, and if met, use the LTK to encrypt with the remote device directly, else re-pair with the remote device. Else if the device hasn't been bonded, the stack will use MITM authentication request in the current link instead of using the authreq in the esp_ble_gap_set_security_param function set by the user.

enum **esp_ble_sm_param_t**

Values:

enumerator **ESP_BLE_SM_PASSKEY**

Authentication requirements of local device

enumerator **ESP_BLE_SM_AUTHEN_REQ_MODE**

The IO capability of local device

enumerator **ESP_BLE_SM_IOCAP_MODE**

Initiator Key Distribution/Generation

enumerator **ESP_BLE_SM_SET_INIT_KEY**

Responder Key Distribution/Generation

enumerator **ESP_BLE_SM_SET_RSP_KEY**

Maximum Encryption key size to support

enumerator **ESP_BLE_SM_MAX_KEY_SIZE**

Minimum Encryption key size requirement from Peer

enumerator **ESP_BLE_SM_MIN_KEY_SIZE**

Set static Passkey

enumerator **ESP_BLE_SM_SET_STATIC_PASSKEY**

Reset static Passkey

enumerator **ESP_BLE_SM_CLEAR_STATIC_PASSKEY**

Accept only specified SMP Authentication requirement

enumerator **ESP_BLE_SM_ONLY_ACCEPT_SPECIFIED_SEC_AUTH**

Enable/Disable OOB support

enumerator **ESP_BLE_SM_OOB_SUPPORT**

Appl encryption key size

enumerator **ESP_BLE_APP_ENC_KEY_SIZE**

authentication max param

enumerator **ESP_BLE_SM_MAX_PARAM**

enum **esp_ble_scan_type_t**

Ble scan type.

Values:

enumerator **BLE_SCAN_TYPE_PASSIVE**

Passive scan

enumerator **BLE_SCAN_TYPE_ACTIVE**

Active scan

enum **esp_ble_scan_filter_t**

Ble scan filter type.

Values:

enumerator **BLE_SCAN_FILTER_ALLOW_ALL**

Accept all :

i. advertisement packets except directed advertising packets not addressed to this device (default).

enumerator **BLE_SCAN_FILTER_ALLOW_ONLY_WLST**

Accept only :

i. advertisement packets from devices where the advertiser’ s address is in the White list.
ii. Directed advertising packets which are not addressed for this device shall be ignored.

enumerator **BLE_SCAN_FILTER_ALLOW_UND_RPA_DIR**

Accept all :

i. undirected advertisement packets, and
ii. directed advertising packets where the initiator address is a resolvable private address, and
iii. directed advertising packets addressed to this device.

enumerator **BLE_SCAN_FILTER_ALLOW_WLIST_RPA_DIR**

Accept all :

i. advertisement packets from devices where the advertiser’ s address is in the White list, and
ii. directed advertising packets where the initiator address is a resolvable private address, and
iii. directed advertising packets addressed to this device.

enum **esp_ble_scan_duplicate_t**

Ble scan duplicate type.

Values:

enumerator **BLE_SCAN_DUPLICATE_DISABLE**

the Link Layer should generate advertising reports to the host for each packet received

enumerator **BLE_SCAN_DUPLICATE_ENABLE**

the Link Layer should filter out duplicate advertising reports to the Host

enumerator **BLE_SCAN_DUPLICATE_MAX**

0x02 –0xFF, Reserved for future use

enum **esp_gap_search_evt_t**

Sub Event of ESP_GAP_BLE_SCAN_RESULT_EVT.

Values:

enumerator **ESP_GAP_SEARCH_INQ_RES_EVT**

Inquiry result for a peer device.

enumerator **ESP_GAP_SEARCH_INQ_CMPL_EVT**

Inquiry complete.

enumerator **ESP_GAP_SEARCH_DISC_RES_EVT**

Discovery result for a peer device.

enumerator **ESP_GAP_SEARCH_DISC_BLE_RES_EVT**

Discovery result for BLE GATT based service on a peer device.

enumerator **ESP_GAP_SEARCH_DISC_CMPL_EVT**

Discovery complete.

enumerator **ESP_GAP_SEARCH_DI_DISC_CMPL_EVT**

Discovery complete.

enumerator **ESP_GAP_SEARCH_SEARCH_CANCEL_CMPL_EVT**

Search cancelled

enumerator **ESP_GAP_SEARCH_INQ_DISCARD_NUM_EVT**

The number of pkt discarded by flow control

enum **esp_ble_evt_type_t**

Ble scan result event type, to indicate the result is scan response or advertising data or other.

Values:

enumerator **ESP_BLE_EVT_CONN_ADV**

Connectable undirected advertising (ADV_IND)

enumerator **ESP_BLE_EVT_CONN_DIR_ADV**

Connectable directed advertising (ADV_DIRECT_IND)

enumerator **ESP_BLE_EVT_DISC_ADV**

Scannable undirected advertising (ADV_SCAN_IND)

enumerator **ESP_BLE_EVT_NON_CONN_ADV**

Non connectable undirected advertising (ADV_NONCONN_IND)

enumerator **ESP_BLE_EVT_SCAN_RSP**

Scan Response (SCAN_RSP)

enum **esp_ble_wl_opration_t**

Values:

enumerator **ESP_BLE_WHITELIST_REMOVE**

remove mac from whitelist

enumerator **ESP_BLE_WHITELIST_ADD**

add address to whitelist

enum **esp_bt_duplicate_exceptional_subcode_type_t**

Values:

enumerator **ESP_BLE_DUPLICATE_EXCEPTIONAL_LIST_ADD**

Add device info into duplicate scan exceptional list

enumerator **ESP_BLE_DUPLICATE_EXCEPTIONAL_LIST_REMOVE**

Remove device info from duplicate scan exceptional list

enumerator **ESP_BLE_DUPLICATE_EXCEPTIONAL_LIST_CLEAN**

Clean duplicate scan exceptional list

enum **esp_ble_duplicate_exceptional_info_type_t**

Values:

enumerator **ESP_BLE_DUPLICATE_SCAN_EXCEPTIONAL_INFO_ADV_ADDR**

BLE advertising address , device info will be added into ESP_BLE_DUPLICATE_SCAN_EXCEPTIONAL_ADDR_LIST

enumerator **ESP_BLE_DUPLICATE_SCAN_EXCEPTIONAL_INFO_MESH_LINK_ID**

BLE mesh link ID, it is for BLE mesh, device info will be added into ESP_BLE_DUPLICATE_SCAN_EXCEPTIONAL_MESH_LINK_ID_LIST

enumerator **ESP_BLE_DUPLICATE_SCAN_EXCEPTIONAL_INFO_MESH_BEACON_TYPE**

BLE mesh beacon AD type, the format is | Len | 0x2B | Beacon Type | Beacon Data |

enumerator **ESP_BLE_DUPLICATE_SCAN_EXCEPTIONAL_INFO_MESH_PROV_SRV_ADV**

BLE mesh provisioning service uuid, the format is | 0x02 | 0x01 | flags | 0x03 | 0x03 | 0x1827 | ···. |`

enumerator **ESP_BLE_DUPLICATE_SCAN_EXCEPTIONAL_INFO_MESH_PROXY_SRV_ADV**

BLE mesh adv with proxy service uuid, the format is | 0x02 | 0x01 | flags | 0x03 | 0x03 | 0x1828 | ···. |`

enum **esp_duplicate_scan_exceptional_list_type_t**

Values:

enumerator **ESP_BLE_DUPLICATE_SCAN_EXCEPTIONAL_ADDR_LIST**

duplicate scan exceptional addr list

enumerator **ESP_BLE_DUPLICATE_SCAN_EXCEPTIONAL_MESH_LINK_ID_LIST**

duplicate scan exceptional mesh link ID list

enumerator **ESP_BLE_DUPLICATE_SCAN_EXCEPTIONAL_MESH_BEACON_TYPE_LIST**

duplicate scan exceptional mesh beacon type list

enumerator **ESP_BLE_DUPLICATE_SCAN_EXCEPTIONAL_MESH_PROV_SRV_ADV_LIST**

duplicate scan exceptional mesh adv with provisioning service uuid

enumerator **ESP_BLE_DUPLICATE_SCAN_EXCEPTIONAL_MESH_PROXY_SRV_ADV_LIST**

duplicate scan exceptional mesh adv with provisioning service uuid

enumerator **ESP_BLE_DUPLICATE_SCAN_EXCEPTIONAL_ALL_LIST**

duplicate scan exceptional all list

GATT DEFINES

API Reference

Header File

- components/bt/host/bluedroid/api/include/api/esp_gatt_defs.h

Unions

union **esp_gatt_rsp_t**

#include <esp_gatt_defs.h> GATT remote read request response type.

Public Members

esp_gatt_value_t **attr_value**

Gatt attribute structure

uint16_t **handle**

Gatt attribute handle

Structures

struct **esp_gatt_id_t**

Gatt id, include uuid and instance id.

Public Members

esp_bt_uuid_t **uuid**

UUID

uint8_t **inst_id**

Instance id

struct **esp_gatt_srvc_id_t**

Gatt service id, include id (uuid and instance id) and primary flag.

Public Members

esp_gatt_id_t **id**

Gatt id, include uuid and instance

bool **is_primary**

This service is primary or not

struct **esp_attr_desc_t**

Attribute description (used to create database)

Public Members

uint16_t **uuid_length**

UUID length

uint8_t ***uuid_p**

UUID value

uint16_t **perm**

Attribute permission

uint16_t **max_length**

Maximum length of the element

uint16_t **length**

Current length of the element

uint8_t ***value**

Element value array

struct **esp_attr_control_t**

attribute auto response flag

Public Members

uint8_t **auto_rsp**

if auto_rsp set to ESP_GATT_RSP_BY_APP, means the response of Write/Read operation will by replied by application. if auto_rsp set to ESP_GATT_AUTO_RSP, means the response of Write/Read operation will be replied by GATT stack automatically.

struct **esp_gatts_attr_db_t**

attribute type added to the gatt server database

Public Members

esp_attr_control_t **attr_control**

The attribute control type

esp_attr_desc_t **att_desc**

The attribute type

struct **esp_attr_value_t**

set the attribute value type

Public Members

uint16_t **attr_max_len**

attribute max value length

uint16_t **attr_len**

attribute current value length

uint8_t ***attr_value**

the pointer to attribute value

struct **esp_gatts_incl_svc_desc_t**

Gatt include service entry element.

Public Members

uint16_t **start_hdl**

Gatt start handle value of included service

uint16_t **end_hdl**

Gatt end handle value of included service

uint16_t **uuid**

Gatt attribute value UUID of included service

struct **esp_gatts_incl128_svc_desc_t**

Gatt include 128 bit service entry element.

Public Members

uint16_t **start_hdl**

Gatt start handle value of included 128 bit service

uint16_t **end_hdl**

Gatt end handle value of included 128 bit service

struct **esp_gatt_value_t**

Gatt attribute value.

Public Members

uint8_t **value**[600]

Gatt attribute value

uint16_t **handle**

Gatt attribute handle

uint16_t **offset**

Gatt attribute value offset

uint16_t **len**

Gatt attribute value length

uint8_t **auth_req**

Gatt authentication request

struct **esp_gatt_conn_params_t**

Connection parameters information.

Public Members

uint16_t **interval**

connection interval

uint16_t **latency**

Slave latency for the connection in number of connection events. Range: 0x0000 to 0x01F3

uint16_t **timeout**

Supervision timeout for the LE Link. Range: 0x000A to 0x0C80. Mandatory Range: 0x000A to 0x0C80 Time = N * 10 msec Time Range: 100 msec to 32 seconds

struct **esp_gattc_multi_t**

read multiple attribute

Public Members

uint8_t **num_attr**

The number of the attribute

uint16_t **handles**[10]

The handles list

struct **esp_gattc_db_elem_t**

data base attribute element

Public Members

esp_gatt_db_attr_type_t **type**

The attribute type

uint16_t **attribute_handle**

The attribute handle, it's valid for all of the type

uint16_t **start_handle**

The service start handle, it's valid only when the type = ESP_GATT_DB_PRIMARY_SERVICE or ESP_GATT_DB_SECONDARY_SERVICE

uint16_t **end_handle**

The service end handle, it's valid only when the type = ESP_GATT_DB_PRIMARY_SERVICE or ESP_GATT_DB_SECONDARY_SERVICE

esp_gatt_char_prop_t **properties**

The characteristic properties, it's valid only when the type = ESP_GATT_DB_CHARACTERISTIC

esp_bt_uuid_t **uuid**

The attribute uuid, it's valid for all of the type

struct **esp_gattc_service_elem_t**

service element

Public Members

bool **is_primary**

The service flag, true if the service is primary service, else is secondary service

uint16_t **start_handle**

The start handle of the service

uint16_t **end_handle**

The end handle of the service

esp_bt_uuid_t **uuid**

The uuid of the service

struct **esp_gattc_char_elem_t**

characteristic element

Public Members

uint16_t **char_handle**

The characteristic handle

esp_gatt_char_prop_t **properties**

The characteristic properties

esp_bt_uuid_t **uuid**

The characteristic uuid

struct **esp_gattc_descr_elem_t**

descriptor element

Public Members

uint16_t **handle**

The characteristic descriptor handle

esp_bt_uuid_t **uuid**

The characteristic descriptor uuid

struct **esp_gattc_incl_svc_elem_t**

include service element

Public Members

uint16_t **handle**

The include service current attribute handle

uint16_t **incl_srvc_s_handle**

The start handle of the service which has been included

uint16_t **incl_srvc_e_handle**

The end handle of the service which has been included

esp_bt_uuid_t **uuid**

The include service uuid

Macros

ESP_GATT_UUID_IMMEDIATE_ALERT_SVC

All "ESP_GATT_UUID_xxx" is attribute types

ESP_GATT_UUID_LINK_LOSS_SVC

ESP_GATT_UUID_TX_POWER_SVC

ESP_GATT_UUID_CURRENT_TIME_SVC

ESP_GATT_UUID_REF_TIME_UPDATE_SVC

ESP_GATT_UUID_NEXT_DST_CHANGE_SVC

ESP_GATT_UUID_GLUCOSE_SVC

ESP_GATT_UUID_HEALTH_THERMOM_SVC

ESP_GATT_UUID_DEVICE_INFO_SVC

ESP_GATT_UUID_HEART_RATE_SVC

ESP_GATT_UUID_PHONE_ALERT_STATUS_SVC

ESP_GATT_UUID_BATTERY_SERVICE_SVC

ESP_GATT_UUID_BLOOD_PRESSURE_SVC

ESP_GATT_UUID_ALERT_NTF_SVC

ESP_GATT_UUID_HID_SVC

ESP_GATT_UUID_SCAN_PARAMETERS_SVC

ESP_GATT_UUID_RUNNING_SPEED_CADENCE_SVC

ESP_GATT_UUID_Automation_IO_SVC

ESP_GATT_UUID_CYCLING_SPEED_CADENCE_SVC

ESP_GATT_UUID_CYCLING_POWER_SVC

ESP_GATT_UUID_LOCATION_AND_NAVIGATION_SVC

ESP_GATT_UUID_ENVIRONMENTAL_SENSING_SVC

ESP_GATT_UUID_BODY_COMPOSITION

ESP_GATT_UUID_USER_DATA_SVC

ESP_GATT_UUID_WEIGHT_SCALE_SVC

ESP_GATT_UUID_BOND_MANAGEMENT_SVC

ESP_GATT_UUID_CONT_GLUCOSE_MONITOR_SVC

ESP_GATT_UUID_PRI_SERVICE

ESP_GATT_UUID_SEC_SERVICE

ESP_GATT_UUID_INCLUDE_SERVICE

ESP_GATT_UUID_CHAR_DECLARE

ESP_GATT_UUID_CHAR_EXT_PROP

ESP_GATT_UUID_CHAR_DESCRIPTION

ESP_GATT_UUID_CHAR_CLIENT_CONFIG

ESP_GATT_UUID_CHAR_SRVR_CONFIG

ESP_GATT_UUID_CHAR_PRESENT_FORMAT

ESP_GATT_UUID_CHAR_AGG_FORMAT

ESP_GATT_UUID_CHAR_VALID_RANGE

ESP_GATT_UUID_EXT_RPT_REF_DESCR

ESP_GATT_UUID_RPT_REF_DESCR

ESP_GATT_UUID_NUM_DIGITALS_DESCR

ESP_GATT_UUID_VALUE_TRIGGER_DESCR

ESP_GATT_UUID_ENV_SENSING_CONFIG_DESCR

ESP_GATT_UUID_ENV_SENSING_MEASUREMENT_DESCR

ESP_GATT_UUID_ENV_SENSING_TRIGGER_DESCR

ESP_GATT_UUID_TIME_TRIGGER_DESCR

ESP_GATT_UUID_GAP_DEVICE_NAME

ESP_GATT_UUID_GAP_ICON

ESP_GATT_UUID_GAP_PREF_CONN_PARAM

ESP_GATT_UUID_GAP_CENTRAL_ADDR_RESOL

ESP_GATT_UUID_GATT_SRV_CHGD

ESP_GATT_UUID_ALERT_LEVEL

ESP_GATT_UUID_TX_POWER_LEVEL

ESP_GATT_UUID_CURRENT_TIME

ESP_GATT_UUID_LOCAL_TIME_INFO

ESP_GATT_UUID_REF_TIME_INFO

ESP_GATT_UUID_NW_STATUS

ESP_GATT_UUID_NW_TRIGGER

ESP_GATT_UUID_ALERT_STATUS

ESP_GATT_UUID_RINGER_CP

ESP_GATT_UUID_RINGER_SETTING

ESP_GATT_UUID_GM_MEASUREMENT

ESP_GATT_UUID_GM_CONTEXT

ESP_GATT_UUID_GM_CONTROL_POINT

ESP_GATT_UUID_GM_FEATURE

ESP_GATT_UUID_SYSTEM_ID

ESP_GATT_UUID_MODEL_NUMBER_STR

ESP_GATT_UUID_SERIAL_NUMBER_STR

ESP_GATT_UUID_FW_VERSION_STR

ESP_GATT_UUID_HW_VERSION_STR

ESP_GATT_UUID_SW_VERSION_STR

ESP_GATT_UUID_MANU_NAME

ESP_GATT_UUID_IEEE_DATA

ESP_GATT_UUID_PNP_ID

ESP_GATT_UUID_HID_INFORMATION

ESP_GATT_UUID_HID_REPORT_MAP

ESP_GATT_UUID_HID_CONTROL_POINT

ESP_GATT_UUID_HID_REPORT

ESP_GATT_UUID_HID_PROTO_MODE

ESP_GATT_UUID_HID_BT_KB_INPUT

ESP_GATT_UUID_HID_BT_KB_OUTPUT

ESP_GATT_UUID_HID_BT_MOUSE_INPUT

ESP_GATT_HEART_RATE_MEAS
Heart Rate Measurement.

ESP_GATT_BODY_SENSOR_LOCATION
Body Sensor Location.

ESP_GATT_HEART_RATE_CNTL_POINT
Heart Rate Control Point.

ESP_GATT_UUID_BATTERY_LEVEL

ESP_GATT_UUID_SC_CONTROL_POINT

ESP_GATT_UUID_SENSOR_LOCATION

ESP_GATT_UUID_RSC_MEASUREMENT

ESP_GATT_UUID_RSC_FEATURE

ESP_GATT_UUID_CSC_MEASUREMENT

ESP_GATT_UUID_CSC_FEATURE

ESP_GATT_UUID_SCAN_INT_WINDOW

ESP_GATT_UUID_SCAN_REFRESH

ESP_GATT_ILLEGAL_UUID
GATT INVALID UUID.

ESP_GATT_ILLEGAL_HANDLE
GATT INVALID HANDLE.

ESP_GATT_ATTR_HANDLE_MAX
GATT attribute max handle.

ESP_GATT_MAX_READ_MULTI_HANDLES

ESP_GATT_PERM_READ
Attribute permissions.

ESP_GATT_PERM_READ_ENCRYPTED

ESP_GATT_PERM_READ_ENC_MITM

ESP_GATT_PERM_WRITE

ESP_GATT_PERM_WRITE_ENCRYPTED

ESP_GATT_PERM_WRITE_ENC_MITM

ESP_GATT_PERM_WRITE_SIGNED

ESP_GATT_PERM_WRITE_SIGNED_MITM

ESP_GATT_PERM_READ_AUTHORIZATION

ESP_GATT_PERM_WRITE_AUTHORIZATION

ESP_GATT_CHAR_PROP_BIT_BROADCAST

ESP_GATT_CHAR_PROP_BIT_READ

ESP_GATT_CHAR_PROP_BIT_WRITE_NR

ESP_GATT_CHAR_PROP_BIT_WRITE

ESP_GATT_CHAR_PROP_BIT_NOTIFY

ESP_GATT_CHAR_PROP_BIT_INDICATE

ESP_GATT_CHAR_PROP_BIT_AUTH

ESP_GATT_CHAR_PROP_BIT_EXT_PROP

ESP_GATT_MAX_ATTR_LEN

GATT maximum attribute length.

ESP_GATT_RSP_BY_APP

ESP_GATT_AUTO_RSP

ESP_GATT_IF_NONE

If callback report gattc_if/gatts_if as this macro, means this event is not correspond to any app

Type Definitions

typedef uint16_t **esp_gatt_perm_t**

typedef uint8_t **esp_gatt_char_prop_t**

typedef uint8_t **esp_gatt_if_t**

Gatt interface type, different application on GATT client use different gatt_if

Enumerations

enum **esp_gatt_prep_write_type**

Attribute write data type from the client.

Values:

enumerator **ESP_GATT_PREP_WRITE_CANCEL**

Prepare write cancel

enumerator **ESP_GATT_PREP_WRITE_EXEC**

Prepare write execute

enum **esp_gatt_status_t**

GATT success code and error codes.

Values:

enumerator **ESP_GATT_OK**

enumerator **ESP_GATT_INVALID_HANDLE**

enumerator **ESP_GATT_READ_NOT_PERMIT**

enumerator **ESP_GATT_WRITE_NOT_PERMIT**

enumerator **ESP_GATT_INVALID_PDU**

enumerator **ESP_GATT_INSUF_AUTHENTICATION**

enumerator **ESP_GATT_REQ_NOT_SUPPORTED**

enumerator **ESP_GATT_INVALID_OFFSET**

enumerator **ESP_GATT_INSUF_AUTHORIZATION**

enumerator **ESP_GATT_PREPARE_Q_FULL**

enumerator **ESP_GATT_NOT_FOUND**

enumerator **ESP_GATT_NOT_LONG**

enumerator **ESP_GATT_INSUF_KEY_SIZE**

enumerator **ESP_GATT_INVALID_ATTR_LEN**

enumerator **ESP_GATT_ERR_UNLIKELY**

enumerator **ESP_GATT_INSUF_ENCRYPTION**

enumerator **ESP_GATT_UNSUPPORT_GRP_TYPE**

enumerator **ESP_GATT_INSUF_RESOURCE**

enumerator **ESP_GATT_NO_RESOURCES**

enumerator **ESP_GATT_INTERNAL_ERROR**

enumerator **ESP_GATT_WRONG_STATE**

enumerator **ESP_GATT_DB_FULL**

enumerator **ESP_GATT_BUSY**

enumerator **ESP_GATT_ERROR**

enumerator **ESP_GATT_CMD_STARTED**

enumerator **ESP_GATT_ILLEGAL_PARAMETER**

enumerator **ESP_GATT_PENDING**

enumerator **ESP_GATT_AUTH_FAIL**

enumerator **ESP_GATT_MORE**

enumerator **ESP_GATT_INVALID_CFG**

enumerator **ESP_GATT_SERVICE_STARTED**

enumerator **ESP_GATT_ENCRYPED_MITM**

enumerator **ESP_GATT_ENCRYPED_NO_MITM**

enumerator **ESP_GATT_NOT_ENCRYPTED**

enumerator **ESP_GATT_CONGESTED**

enumerator **ESP_GATT_DUP_REG**

enumerator **ESP_GATT_ALREADY_OPEN**

enumerator **ESP_GATT_CANCEL**

enumerator **ESP_GATT_STACK_RSP**

enumerator **ESP_GATT_APP_RSP**

enumerator **ESP_GATT_UNKNOWN_ERROR**

enumerator **ESP_GATT_CCC_CFG_ERR**

enumerator **ESP_GATT_PRC_IN_PROGRESS**

enumerator **ESP_GATT_OUT_OF_RANGE**

enum **esp_gatt_conn_reason_t**

Gatt Connection reason enum.

Values:

enumerator **ESP_GATT_CONN_UNKNOWN**

Gatt connection unknown

enumerator **ESP_GATT_CONN_L2C_FAILURE**

General L2cap failure

enumerator **ESP_GATT_CONN_TIMEOUT**

Connection timeout

enumerator **ESP_GATT_CONN_TERMINATE_PEER_USER**

Connection terminate by peer user

enumerator **ESP_GATT_CONN_TERMINATE_LOCAL_HOST**

Connection terminated by local host

enumerator **ESP_GATT_CONN_FAIL_ESTABLISH**

Connection fail to establish

enumerator **ESP_GATT_CONN_LMP_TIMEOUT**

Connection fail for LMP response tout

enumerator **ESP_GATT_CONN_CONN_CANCEL**

L2CAP connection cancelled

enumerator **ESP_GATT_CONN_NONE**

No connection to cancel

enum **esp_gatt_auth_req_t**

Gatt authentication request type.

Values:

enumerator **ESP_GATT_AUTH_REQ_NONE**

enumerator **ESP_GATT_AUTH_REQ_NO_MITM**

enumerator **ESP_GATT_AUTH_REQ_MITM**

enumerator **ESP_GATT_AUTH_REQ_SIGNED_NO_MITM**

enumerator **ESP_GATT_AUTH_REQ_SIGNED_MITM**

enum **esp_service_source_t**

Values:

enumerator **ESP_GATT_SERVICE_FROM_REMOTE_DEVICE**

enumerator **ESP_GATT_SERVICE_FROM_NVS_FLASH**

enumerator **ESP_GATT_SERVICE_FROM_UNKNOWN**

enum **esp_gatt_write_type_t**

Gatt write type.

Values:

enumerator **ESP_GATT_WRITE_TYPE_NO_RSP**

Gatt write attribute need no response

enumerator **ESP_GATT_WRITE_TYPE_RSP**

Gatt write attribute need remote response

enum **esp_gatt_db_attr_type_t**

the type of attribute element

Values:

enumerator **ESP_GATT_DB_PRIMARY_SERVICE**

Gattc primary service attribute type in the cache

enumerator **ESP_GATT_DB_SECONDARY_SERVICE**

Gattc secondary service attribute type in the cache

enumerator **ESP_GATT_DB_CHARACTERISTIC**

Gattc characteristic attribute type in the cache

enumerator **ESP_GATT_DB_DESCRIPTOR**

Gattc characteristic descriptor attribute type in the cache

enumerator **ESP_GATT_DB_INCLUDED_SERVICE**

Gattc include service attribute type in the cache

enumerator **ESP_GATT_DB_ALL**

Gattc all the attribute (primary service & secondary service & include service & char & descriptor) type in the cache

GATT SERVER API

Application Example Check bluetooth/bluedroid/ble folder in ESP-IDF examples, which contains the following demos and their tutorials:

- This is a GATT sever demo and its tutorial. This demo creates a GATT service with an attribute table, which releases the user from adding attributes one by one. This is the recommended method of adding attributes.
  - bluetooth/bluedroid/ble/gatt_server_service_table
  - GATT Server Service Table Example Walkthrough
- This is a GATT server demo and its tutorial. This demo creates a GATT service by adding attributes one by one as defined by Bluedroid. The recommended method of adding attributes is presented in example above.
  - bluetooth/bluedroid/ble/gatt_server
  - GATT Server Example Walkthrough
- This is a BLE SPP-Like demo. This demo, which acts as a GATT server, can receive data from UART and then send the data to the peer device automatically.
  - bluetooth/bluedroid/ble/ble_spp_server

API Reference

Header File

- components/bt/host/bluedroid/api/include/api/esp_gatts_api.h

Functions

esp_err_t **esp_ble_gatts_register_callback** (*esp_gatts_cb_t* callback)

This function is called to register application callbacks with BTA GATTS module.

Returns
- ESP_OK : success
- other : failed

esp_err_t **esp_ble_gatts_app_register** (uint16_t app_id)

This function is called to register application identifier.

Returns
- ESP_OK : success
- other : failed

esp_err_t **esp_ble_gatts_app_unregister** (*esp_gatt_if_t* gatts_if)

unregister with GATT Server.

Parameters **gatts_if** –**[in]** GATT server access interface
Returns
- ESP_OK : success
- other : failed

esp_err_t **esp_ble_gatts_create_service** (*esp_gatt_if_t* gatts_if, *esp_gatt_srvc_id_t* *service_id, uint16_t num_handle)

Create a service. When service creation is done, a callback event ESP_GATTS_CREATE_EVT is called to report status and service ID to the profile. The service ID obtained in the callback function needs to be used when adding included service and characteristics/descriptors into the service.

Parameters
- **gatts_if** –**[in]** GATT server access interface
- **service_id** –**[in]** service ID.
- **num_handle** –**[in]** number of handle requested for this service.

Returns
- ESP_OK : success
- other : failed

esp_err_t **esp_ble_gatts_create_attr_tab** (const *esp_gatts_attr_db_t* *gatts_attr_db, *esp_gatt_if_t* gatts_if, uint8_t max_nb_attr, uint8_t srvc_inst_id)

Create a service attribute tab.

Parameters
- **gatts_attr_db** –**[in]** the pointer to the service attr tab
- **gatts_if** –**[in]** GATT server access interface
- **max_nb_attr** –**[in]** the number of attribute to be added to the service database.
- **srvc_inst_id** –**[in]** the instance id of the service

Returns
- ESP_OK : success
- other : failed

esp_err_t **esp_ble_gatts_add_included_service** (uint16_t service_handle, uint16_t included_service_handle)

This function is called to add an included service. This function have to be called between 'esp_ble_gatts_create_service' and 'esp_ble_gatts_add_char'. After included service is included, a callback event ESP_GATTS_ADD_INCL_SRVC_EVT is reported the included service ID.

Parameters
- **service_handle** –**[in]** service handle to which this included service is to be added.

- **included_service_handle** –**[in]** the service ID to be included.

Returns

- ESP_OK : success
- other : failed

esp_err_t **esp_ble_gatts_add_char**(uint16_t service_handle, *esp_bt_uuid_t* *char_uuid, *esp_gatt_perm_t* perm, *esp_gatt_char_prop_t* property, *esp_attr_value_t* *char_val, *esp_attr_control_t* *control)

This function is called to add a characteristic into a service.

Parameters

- **service_handle** –**[in]** service handle to which this included service is to be added.
- **char_uuid** –**[in]** : Characteristic UUID.
- **perm** –**[in]** : Characteristic value declaration attribute permission.
- **property** –**[in]** : Characteristic Properties
- **char_val** –**[in]** : Characteristic value
- **control** –**[in]** : attribute response control byte

Returns

- ESP_OK : success
- other : failed

esp_err_t **esp_ble_gatts_add_char_descr**(uint16_t service_handle, *esp_bt_uuid_t* *descr_uuid, *esp_gatt_perm_t* perm, *esp_attr_value_t* *char_descr_val, *esp_attr_control_t* *control)

This function is called to add characteristic descriptor. When it's done, a callback event ESP_GATTS_ADD_DESCR_EVT is called to report the status and an ID number for this descriptor.

Parameters

- **service_handle** –**[in]** service handle to which this characteristic descriptor is to be added.
- **perm** –**[in]** descriptor access permission.
- **descr_uuid** –**[in]** descriptor UUID.
- **char_descr_val** –**[in]** : Characteristic descriptor value
- **control** –**[in]** : attribute response control byte

Returns

- ESP_OK : success
- other : failed

esp_err_t **esp_ble_gatts_delete_service**(uint16_t service_handle)

This function is called to delete a service. When this is done, a callback event ESP_GATTS_DELETE_EVT is report with the status.

Parameters **service_handle** –**[in]** service_handle to be deleted.

Returns

- ESP_OK : success
- other : failed

esp_err_t **esp_ble_gatts_start_service**(uint16_t service_handle)

This function is called to start a service.

Parameters **service_handle** –**[in]** the service handle to be started.

Returns

- ESP_OK : success
- other : failed

esp_err_t **esp_ble_gatts_stop_service**(uint16_t service_handle)

This function is called to stop a service.

Parameters **service_handle** –**[in]** - service to be topped.

Returns

- ESP_OK : success
- other : failed

esp_err_t **esp_ble_gatts_send_indicate** (*esp_gatt_if_t* gatts_if, uint16_t conn_id, uint16_t attr_handle, uint16_t value_len, uint8_t *value, bool need_confirm)

Send indicate or notify to GATT client. Set param need_confirm as false will send notification, otherwise indication.

Parameters

- **gatts_if** –**[in]** GATT server access interface
- **conn_id** –**[in]** - connection id to indicate.
- **attr_handle** –**[in]** - attribute handle to indicate.
- **value_len** –**[in]** - indicate value length.
- **value** –**[in]** value to indicate.
- **need_confirm** –**[in]** - Whether a confirmation is required. false sends a GATT notification, true sends a GATT indication.

Returns

- ESP_OK : success
- other : failed

esp_err_t **esp_ble_gatts_send_response** (*esp_gatt_if_t* gatts_if, uint16_t conn_id, uint32_t trans_id, *esp_gatt_status_t* status, *esp_gatt_rsp_t* *rsp)

This function is called to send a response to a request.

Parameters

- **gatts_if** –**[in]** GATT server access interface
- **conn_id** –**[in]** - connection identifier.
- **trans_id** –**[in]** - transfer id
- **status** –**[in]** - response status
- **rsp** –**[in]** - response data.

Returns

- ESP_OK : success
- other : failed

esp_err_t **esp_ble_gatts_set_attr_value** (uint16_t attr_handle, uint16_t length, const uint8_t *value)

This function is called to set the attribute value by the application.

Parameters

- **attr_handle** –**[in]** the attribute handle which to be set
- **length** –**[in]** the value length
- **value** –**[in]** the pointer to the attribute value

Returns

- ESP_OK : success
- other : failed

esp_gatt_status_t **esp_ble_gatts_get_attr_value** (uint16_t attr_handle, uint16_t *length, const uint8_t **value)

Retrieve attribute value.

Parameters

- **attr_handle** –**[in]** Attribute handle.
- **length** –**[out]** pointer to the attribute value length
- **value** –**[out]** Pointer to attribute value payload, the value cannot be modified by user

Returns

- ESP_GATT_OK : success
- other : failed

esp_err_t **esp_ble_gatts_open** (*esp_gatt_if_t* gatts_if, *esp_bd_addr_t* remote_bda, bool is_direct)

Open a direct open connection or add a background auto connection.

Parameters

- **gatts_if** –**[in]** GATT server access interface
- **remote_bda** –**[in]** remote device bluetooth device address.
- **is_direct** –**[in]** direct connection or background auto connection

Returns

- ESP_OK : success
- other : failed

esp_err_t **esp_ble_gatts_close**(*esp_gatt_if_t* gatts_if, uint16_t conn_id)

Close a connection a remote device.

Parameters

- **gatts_if** –**[in]** GATT server access interface
- **conn_id** –**[in]** connection ID to be closed.

Returns

- ESP_OK : success
- other : failed

esp_err_t **esp_ble_gatts_send_service_change_indication**(*esp_gatt_if_t* gatts_if, *esp_bd_addr_t* remote_bda)

Send service change indication.

Parameters

- **gatts_if** –**[in]** GATT server access interface
- **remote_bda** –**[in]** remote device bluetooth device address. If remote_bda is NULL then it will send service change indication to all the connected devices and if not then to a specific device

Returns

- ESP_OK : success
- other : failed

Unions

union **esp_ble_gatts_cb_param_t**

#include <esp_gatts_api.h> Gatt server callback parameters union.

Public Members

struct *esp_ble_gatts_cb_param_t*::*gatts_reg_evt_param* **reg**

Gatt server callback param of ESP_GATTS_REG_EVT

struct *esp_ble_gatts_cb_param_t*::*gatts_read_evt_param* **read**

Gatt server callback param of ESP_GATTS_READ_EVT

struct *esp_ble_gatts_cb_param_t*::*gatts_write_evt_param* **write**

Gatt server callback param of ESP_GATTS_WRITE_EVT

struct *esp_ble_gatts_cb_param_t*::*gatts_exec_write_evt_param* **exec_write**

Gatt server callback param of ESP_GATTS_EXEC_WRITE_EVT

struct *esp_ble_gatts_cb_param_t*::*gatts_mtu_evt_param* **mtu**

Gatt server callback param of ESP_GATTS_MTU_EVT

struct *esp_ble_gatts_cb_param_t*::*gatts_conf_evt_param* **conf**

Gatt server callback param of ESP_GATTS_CONF_EVT (confirm)

struct *esp_ble_gatts_cb_param_t*::*gatts_create_evt_param* **create**

Gatt server callback param of ESP_GATTS_CREATE_EVT

struct *esp_ble_gatts_cb_param_t*::*gatts_add_incl_srvc_evt_param* **add_incl_srvc**

Gatt server callback param of ESP_GATTS_ADD_INCL_SRVC_EVT

struct *esp_ble_gatts_cb_param_t*::*gatts_add_char_evt_param* **add_char**

Gatt server callback param of ESP_GATTS_ADD_CHAR_EVT

struct *esp_ble_gatts_cb_param_t*::*gatts_add_char_descr_evt_param* **add_char_descr**

Gatt server callback param of ESP_GATTS_ADD_CHAR_DESCR_EVT

struct *esp_ble_gatts_cb_param_t*::*gatts_delete_evt_param* **del**

Gatt server callback param of ESP_GATTS_DELETE_EVT

struct *esp_ble_gatts_cb_param_t*::*gatts_start_evt_param* **start**

Gatt server callback param of ESP_GATTS_START_EVT

struct *esp_ble_gatts_cb_param_t*::*gatts_stop_evt_param* **stop**

Gatt server callback param of ESP_GATTS_STOP_EVT

struct *esp_ble_gatts_cb_param_t*::*gatts_connect_evt_param* **connect**

Gatt server callback param of ESP_GATTS_CONNECT_EVT

struct *esp_ble_gatts_cb_param_t*::*gatts_disconnect_evt_param* **disconnect**

Gatt server callback param of ESP_GATTS_DISCONNECT_EVT

struct *esp_ble_gatts_cb_param_t*::*gatts_open_evt_param* **open**

Gatt server callback param of ESP_GATTS_OPEN_EVT

struct *esp_ble_gatts_cb_param_t*::*gatts_cancel_open_evt_param* **cancel_open**

Gatt server callback param of ESP_GATTS_CANCEL_OPEN_EVT

struct *esp_ble_gatts_cb_param_t*::*gatts_close_evt_param* **close**

Gatt server callback param of ESP_GATTS_CLOSE_EVT

struct *esp_ble_gatts_cb_param_t*::*gatts_congest_evt_param* **congest**

Gatt server callback param of ESP_GATTS_CONGEST_EVT

struct *esp_ble_gatts_cb_param_t*::*gatts_rsp_evt_param* **rsp**

Gatt server callback param of ESP_GATTS_RESPONSE_EVT

struct *esp_ble_gatts_cb_param_t*::*gatts_add_attr_tab_evt_param* **add_attr_tab**

Gatt server callback param of ESP_GATTS_CREAT_ATTR_TAB_EVT

struct *esp_ble_gatts_cb_param_t*::*gatts_set_attr_val_evt_param* **set_attr_val**

Gatt server callback param of ESP_GATTS_SET_ATTR_VAL_EVT

struct *esp_ble_gatts_cb_param_t*::*gatts_send_service_change_evt_param* **service_change**

Gatt server callback param of ESP_GATTS_SEND_SERVICE_CHANGE_EVT

struct **gatts_add_attr_tab_evt_param**

#include <esp_gatts_api.h> ESP_GATTS_CREAT_ATTR_TAB_EVT.

Public Members

esp_gatt_status_t **status**

Operation status

esp_bt_uuid_t **svc_uuid**

Service uuid type

uint8_t **svc_inst_id**

Service id

uint16_t **num_handle**

The number of the attribute handle to be added to the gatts database

uint16_t ***handles**

The number to the handles

struct **gatts_add_char_descr_evt_param**

#include <esp_gatts_api.h> ESP_GATTS_ADD_CHAR_DESCR_EVT.

Public Members

esp_gatt_status_t **status**

Operation status

uint16_t **attr_handle**

Descriptor attribute handle

uint16_t **service_handle**

Service attribute handle

esp_bt_uuid_t **descr_uuid**

Characteristic descriptor uuid

struct **gatts_add_char_evt_param**

#include <esp_gatts_api.h> ESP_GATTS_ADD_CHAR_EVT.

Public Members

esp_gatt_status_t **status**

Operation status

uint16_t **attr_handle**

Characteristic attribute handle

uint16_t **service_handle**

Service attribute handle

esp_bt_uuid_t **char_uuid**

Characteristic uuid

struct **gatts_add_incl_srvc_evt_param**

#include <esp_gatts_api.h> ESP_GATTS_ADD_INCL_SRVC_EVT.

Public Members

esp_gatt_status_t **status**

Operation status

uint16_t **attr_handle**

Included service attribute handle

uint16_t **service_handle**

Service attribute handle

struct **gatts_cancel_open_evt_param**

#include <esp_gatts_api.h> ESP_GATTS_CANCEL_OPEN_EVT.

Public Members

esp_gatt_status_t **status**

Operation status

struct **gatts_close_evt_param**

#include <esp_gatts_api.h> ESP_GATTS_CLOSE_EVT.

Public Members

esp_gatt_status_t **status**

Operation status

uint16_t **conn_id**

Connection id

struct **gatts_conf_evt_param**

#include <esp_gatts_api.h> ESP_GATTS_CONF_EVT.

Public Members

esp_gatt_status_t **status**

Operation status

uint16_t **conn_id**

Connection id

uint16_t **handle**

attribute handle

uint16_t **len**

The indication or notification value length, len is valid when send notification or indication failed

uint8_t ***value**

The indication or notification value , value is valid when send notification or indication failed

struct **gatts_congest_evt_param**

#include <esp_gatts_api.h> ESP_GATTS_LISTEN_EVT.

ESP_GATTS_CONGEST_EVT

Public Members

uint16_t **conn_id**

Connection id

bool **congested**

Congested or not

struct **gatts_connect_evt_param**

#include <esp_gatts_api.h> ESP_GATTS_CONNECT_EVT.

Public Members

uint16_t **conn_id**

Connection id

uint8_t **link_role**

Link role : master role = 0 ; slave role = 1

esp_bd_addr_t **remote_bda**

Remote bluetooth device address

esp_gatt_conn_params_t **conn_params**

current Connection parameters

struct **gatts_create_evt_param**

#include <esp_gatts_api.h> ESP_GATTS_UNREG_EVT.

ESP_GATTS_CREATE_EVT

Public Members

esp_gatt_status_t **status**

Operation status

uint16_t **service_handle**

Service attribute handle

esp_gatt_srvc_id_t **service_id**

Service id, include service uuid and other information

struct **gatts_delete_evt_param**

#include <esp_gatts_api.h> ESP_GATTS_DELETE_EVT.

Public Members

esp_gatt_status_t **status**

Operation status

uint16_t **service_handle**

Service attribute handle

struct **gatts_disconnect_evt_param**

#include <esp_gatts_api.h> ESP_GATTS_DISCONNECT_EVT.

Public Members

uint16_t **conn_id**

Connection id

uint8_t **link_role**

Link role : master role = 0 ; slave role = 1

esp_bd_addr_t **remote_bda**

Remote bluetooth device address

esp_gatt_conn_reason_t **reason**

Indicate the reason of disconnection

struct **gatts_exec_write_evt_param**

#include <esp_gatts_api.h> ESP_GATTS_EXEC_WRITE_EVT.

Public Members

uint16_t **conn_id**

Connection id

uint32_t **trans_id**

Transfer id

esp_bd_addr_t **bda**

The bluetooth device address which been written

uint8_t **exec_write_flag**

Execute write flag

struct **gatts_mtu_evt_param**

#include <esp_gatts_api.h> ESP_GATTS_MTU_EVT.

Public Members

uint16_t **conn_id**

Connection id

uint16_t **mtu**

MTU size

struct **gatts_open_evt_param**

#include <esp_gatts_api.h> ESP_GATTS_OPEN_EVT.

Public Members

esp_gatt_status_t **status**

Operation status

struct **gatts_read_evt_param**

#include <esp_gatts_api.h> ESP_GATTS_READ_EVT.

Public Members

uint16_t **conn_id**

Connection id

uint32_t **trans_id**

Transfer id

esp_bd_addr_t **bda**

The bluetooth device address which been read

uint16_t **handle**

The attribute handle

uint16_t **offset**

Offset of the value, if the value is too long

bool **is_long**

The value is too long or not

bool **need_rsp**

The read operation need to do response

struct **gatts_reg_evt_param**

#include <esp_gatts_api.h> ESP_GATTS_REG_EVT.

Public Members

esp_gatt_status_t **status**

Operation status

uint16_t **app_id**

Application id which input in register API

struct **gatts_rsp_evt_param**

#include <esp_gatts_api.h> ESP_GATTS_RESPONSE_EVT.

Public Members

esp_gatt_status_t **status**

Operation status

uint16_t **handle**

Attribute handle which send response

struct **gatts_send_service_change_evt_param**

#include <esp_gatts_api.h> ESP_GATTS_SEND_SERVICE_CHANGE_EVT.

Public Members

esp_gatt_status_t **status**

Operation status

struct **gatts_set_attr_val_evt_param**

#include <esp_gatts_api.h> ESP_GATTS_SET_ATTR_VAL_EVT.

Public Members

uint16_t **srvc_handle**

The service handle

uint16_t **attr_handle**

The attribute handle

esp_gatt_status_t **status**

Operation status

struct **gatts_start_evt_param**

#include <esp_gatts_api.h> ESP_GATTS_START_EVT.

Public Members

esp_gatt_status_t **status**

Operation status

uint16_t **service_handle**

Service attribute handle

struct **gatts_stop_evt_param**

#include <esp_gatts_api.h> ESP_GATTS_STOP_EVT.

Public Members

esp_gatt_status_t **status**

Operation status

uint16_t **service_handle**

Service attribute handle

struct **gatts_write_evt_param**

#include <esp_gatts_api.h> ESP_GATTS_WRITE_EVT.

Public Members

uint16_t **conn_id**

Connection id

uint32_t **trans_id**

Transfer id

esp_bd_addr_t **bda**

The bluetooth device address which been written

uint16_t **handle**

The attribute handle

uint16_t **offset**

Offset of the value, if the value is too long

bool **need_rsp**

The write operation need to do response

bool **is_prep**

This write operation is prepare write

uint16_t **len**

The write attribute value length

uint8_t ***value**

The write attribute value

Macros

ESP_GATT_PREP_WRITE_CANCEL

Prepare write flag to indicate cancel prepare write

ESP_GATT_PREP_WRITE_EXEC

Prepare write flag to indicate execute prepare write

Type Definitions

typedef void (***esp_gatts_cb_t**)(*esp_gatts_cb_event_t* event, *esp_gatt_if_t* gatts_if, *esp_ble_gatts_cb_param_t* *param)

GATT Server callback function type.

Param event : Event type
Param gatts_if : GATT server access interface, normally different gatts_if correspond to different profile
Param param : Point to callback parameter, currently is union type

Enumerations

enum **esp_gatts_cb_event_t**

GATT Server callback function events.

Values:

enumerator **ESP_GATTS_REG_EVT**

When register application id, the event comes

enumerator **ESP_GATTS_READ_EVT**

When gatt client request read operation, the event comes

enumerator **ESP_GATTS_WRITE_EVT**

When gatt client request write operation, the event comes

enumerator **ESP_GATTS_EXEC_WRITE_EVT**

When gatt client request execute write, the event comes

enumerator **ESP_GATTS_MTU_EVT**

When set mtu complete, the event comes

enumerator **ESP_GATTS_CONF_EVT**

When receive confirm, the event comes

enumerator **ESP_GATTS_UNREG_EVT**

When unregister application id, the event comes

enumerator **ESP_GATTS_CREATE_EVT**

When create service complete, the event comes

enumerator **ESP_GATTS_ADD_INCL_SRVC_EVT**

When add included service complete, the event comes

enumerator **ESP_GATTS_ADD_CHAR_EVT**

When add characteristic complete, the event comes

enumerator **ESP_GATTS_ADD_CHAR_DESCR_EVT**

When add descriptor complete, the event comes

enumerator **ESP_GATTS_DELETE_EVT**

When delete service complete, the event comes

enumerator **ESP_GATTS_START_EVT**

When start service complete, the event comes

enumerator **ESP_GATTS_STOP_EVT**

When stop service complete, the event comes

enumerator **ESP_GATTS_CONNECT_EVT**

When gatt client connect, the event comes

enumerator **ESP_GATTS_DISCONNECT_EVT**

When gatt client disconnect, the event comes

enumerator **ESP_GATTS_OPEN_EVT**

When connect to peer, the event comes

enumerator **ESP_GATTS_CANCEL_OPEN_EVT**

When disconnect from peer, the event comes

enumerator **ESP_GATTS_CLOSE_EVT**

When gatt server close, the event comes

enumerator **ESP_GATTS_LISTEN_EVT**

When gatt listen to be connected the event comes

enumerator **ESP_GATTS_CONGEST_EVT**

When congest happen, the event comes

enumerator **ESP_GATTS_RESPONSE_EVT**

When gatt send response complete, the event comes

enumerator **ESP_GATTS_CREAT_ATTR_TAB_EVT**

When gatt create table complete, the event comes

enumerator **ESP_GATTS_SET_ATTR_VAL_EVT**

When gatt set attr value complete, the event comes

enumerator **ESP_GATTS_SEND_SERVICE_CHANGE_EVT**

When gatt send service change indication complete, the event comes

GATT CLIENT API

Application Example Check bluetooth/bluedroid/ble folder in ESP-IDF examples, which contains the following demos and their tutorials:

- This is a GATT client demo and its tutorial. This demo can scan for devices, connect to the GATT server and discover its services.
  - bluetooth/bluedroid/ble/gatt_client
  - GATT Client Example Walkthrough
- This is a multiple connection demo and its tutorial. This demo can connect to multiple GATT server devices and discover their services.
  - bluetooth/bluedroid/ble/gattc_multi_connect
  - GATT Client Multi-connection Example Walkthrough
- This is a BLE SPP-Like demo. This demo, which acts as a GATT client, can receive data from UART and then send the data to the peer device automatically.
  - bluetooth/bluedroid/ble/ble_spp_client

API Reference

Header File

- components/bt/host/bluedroid/api/include/api/esp_gattc_api.h

Functions

esp_err_t **esp_ble_gattc_register_callback**(*esp_gattc_cb_t* callback)

This function is called to register application callbacks with GATTC module.

Parameters **callback** –**[in]** : pointer to the application callback function.

Returns

- ESP_OK: success
- other: failed

esp_err_t **esp_ble_gattc_app_register**(uint16_t app_id)

This function is called to register application callbacks with GATTC module.

Parameters **app_id** –**[in]** : Application Identify (UUID), for different application

Returns

- ESP_OK: success
- other: failed

esp_err_t **esp_ble_gattc_app_unregister**(*esp_gatt_if_t* gattc_if)

This function is called to unregister an application from GATTC module.

Parameters **gattc_if** –**[in]** Gatt client access interface.

Returns

- ESP_OK: success
- other: failed

esp_err_t **esp_ble_gattc_open**(*esp_gatt_if_t* gattc_if, *esp_bd_addr_t* remote_bda, *esp_ble_addr_type_t* remote_addr_type, bool is_direct)

Open a direct connection or add a background auto connection.

Parameters

- **gattc_if** –**[in]** Gatt client access interface.
- **remote_bda** –**[in]** remote device bluetooth device address.
- **remote_addr_type** –**[in]** remote device bluetooth device the address type.
- **is_direct** –**[in]** direct connection or background auto connection(by now, background auto connection is not supported).

Returns

- ESP_OK: success
- other: failed

esp_err_t **esp_ble_gattc_aux_open**(*esp_gatt_if_t* gattc_if, *esp_bd_addr_t* remote_bda, *esp_ble_addr_type_t* remote_addr_type, bool is_direct)

esp_err_t **esp_ble_gattc_close**(*esp_gatt_if_t* gattc_if, uint16_t conn_id)

Close the virtual connection to the GATT server. gattc may have multiple virtual GATT server connections when multiple app_id registered, this API only close one virtual GATT server connection. if there exist other virtual GATT server connections, it does not disconnect the physical connection. if you want to disconnect the physical connection directly, you can use esp_ble_gap_disconnect(esp_bd_addr_t remote_device).

Parameters

- **gattc_if** –**[in]** Gatt client access interface.
- **conn_id** –**[in]** connection ID to be closed.

Returns

- ESP_OK: success
- other: failed

esp_err_t **esp_ble_gattc_send_mtu_req**(*esp_gatt_if_t* gattc_if, uint16_t conn_id)

Configure the MTU size in the GATT channel. This can be done only once per connection. Before using, use esp_ble_gatt_set_local_mtu() to configure the local MTU size.

Parameters

- **gattc_if** –**[in]** Gatt client access interface.
- **conn_id** –**[in]** connection ID.

Returns

- ESP_OK: success
- other: failed

esp_err_t **esp_ble_gattc_search_service**(*esp_gatt_if_t* gattc_if, uint16_t conn_id, *esp_bt_uuid_t* *filter_uuid)

This function is called to get service from local cache. This function report service search result by a callback event, and followed by a service search complete event.

Parameters

- **gattc_if** –**[in]** Gatt client access interface.
- **conn_id** –**[in]** connection ID.
- **filter_uuid** –**[in]** a UUID of the service application is interested in. If Null, discover for all services.

Returns

- ESP_OK: success
- other: failed

esp_gatt_status_t **esp_ble_gattc_get_service**(*esp_gatt_if_t* gattc_if, uint16_t conn_id, *esp_bt_uuid_t* *svc_uuid, *esp_gattc_service_elem_t* *result, uint16_t *count, uint16_t offset)

Find all the service with the given service uuid in the gattc cache, if the svc_uuid is NULL, find all the service. Note: It just get service from local cache, won't get from remote devices. If want to get it from remote device, need to used the esp_ble_gattc_cache_refresh, then call esp_ble_gattc_get_service again.

Parameters

- **gattc_if** –**[in]** Gatt client access interface.
- **conn_id** –**[in]** connection ID which identify the server.
- **svc_uuid** –**[in]** the pointer to the service uuid.
- **result** –**[out]** The pointer to the service which has been found in the gattc cache.
- **count** –**[inout]** input the number of service want to find, it will output the number of service has been found in the gattc cache with the given service uuid.
- **offset** –**[in]** Offset of the service position to get.

Returns

- ESP_OK: success
- other: failed

esp_gatt_status_t **esp_ble_gattc_get_all_char**(*esp_gatt_if_t* gattc_if, uint16_t conn_id, uint16_t start_handle, uint16_t end_handle, *esp_gattc_char_elem_t* *result, uint16_t *count, uint16_t offset)

Find all the characteristic with the given service in the gattc cache Note: It just get characteristic from local cache, won't get from remote devices.

Parameters

- **gattc_if** –**[in]** Gatt client access interface.
- **conn_id** –**[in]** connection ID which identify the server.
- **start_handle** –**[in]** the attribute start handle.
- **end_handle** –**[in]** the attribute end handle
- **result** –**[out]** The pointer to the characteristic in the service.
- **count** –**[inout]** input the number of characteristic want to find, it will output the number of characteristic has been found in the gattc cache with the given service.
- **offset** –**[in]** Offset of the characteristic position to get.

Returns

- ESP_OK: success
- other: failed

esp_gatt_status_t **esp_ble_gattc_get_all_descr**(*esp_gatt_if_t* gattc_if, uint16_t conn_id, uint16_t char_handle, *esp_gattc_descr_elem_t* *result, uint16_t *count, uint16_t offset)

Find all the descriptor with the given characteristic in the gattc cache Note: It just get descriptor from local cache, won't get from remote devices.

Parameters

- **gattc_if** –**[in]** Gatt client access interface.
- **conn_id** –**[in]** connection ID which identify the server.
- **char_handle** –**[in]** the given characteristic handle
- **result** –**[out]** The pointer to the descriptor in the characteristic.
- **count** –**[inout]** input the number of descriptor want to find, it will output the number of descriptor has been found in the gattc cache with the given characteristic.
- **offset** –**[in]** Offset of the descriptor position to get.

Returns

- ESP_OK: success
- other: failed

esp_gatt_status_t **esp_ble_gattc_get_char_by_uuid**(*esp_gatt_if_t* gattc_if, uint16_t conn_id, uint16_t start_handle, uint16_t end_handle, *esp_bt_uuid_t* char_uuid, *esp_gattc_char_elem_t* *result, uint16_t *count)

Find the characteristic with the given characteristic uuid in the gattc cache Note: It just get characteristic from

local cache, won’ t get from remote devices.

Parameters

- **gattc_if** –**[in]** Gatt client access interface.
- **conn_id** –**[in]** connection ID which identify the server.
- **start_handle** –**[in]** the attribute start handle
- **end_handle** –**[in]** the attribute end handle
- **char_uuid** –**[in]** the characteristic uuid
- **result** –**[out]** The pointer to the characteristic in the service.
- **count** –**[inout]** input the number of characteristic want to find, it will output the number of characteristic has been found in the gattc cache with the given service.

Returns

- ESP_OK: success
- other: failed

esp_gatt_status_t **esp_ble_gattc_get_descr_by_uuid**(*esp_gatt_if_t* gattc_if, uint16_t conn_id, uint16_t start_handle, uint16_t end_handle, *esp_bt_uuid_t* char_uuid, *esp_bt_uuid_t* descr_uuid, *esp_gattc_descr_elem_t* *result, uint16_t *count)

Find the descriptor with the given characteristic uuid in the gattc cache Note: It just get descriptor from local cache, won’ t get from remote devices.

Parameters

- **gattc_if** –**[in]** Gatt client access interface.
- **conn_id** –**[in]** connection ID which identify the server.
- **start_handle** –**[in]** the attribute start handle
- **end_handle** –**[in]** the attribute end handle
- **char_uuid** –**[in]** the characteristic uuid.
- **descr_uuid** –**[in]** the descriptor uuid.
- **result** –**[out]** The pointer to the descriptor in the given characteristic.
- **count** –**[inout]** input the number of descriptor want to find, it will output the number of descriptor has been found in the gattc cache with the given characteristic.

Returns

- ESP_OK: success
- other: failed

esp_gatt_status_t **esp_ble_gattc_get_descr_by_char_handle**(*esp_gatt_if_t* gattc_if, uint16_t conn_id, uint16_t char_handle, *esp_bt_uuid_t* descr_uuid, *esp_gattc_descr_elem_t* *result, uint16_t *count)

Find the descriptor with the given characteristic handle in the gattc cache Note: It just get descriptor from local cache, won’ t get from remote devices.

Parameters

- **gattc_if** –**[in]** Gatt client access interface.
- **conn_id** –**[in]** connection ID which identify the server.
- **char_handle** –**[in]** the characteristic handle.
- **descr_uuid** –**[in]** the descriptor uuid.
- **result** –**[out]** The pointer to the descriptor in the given characteristic.
- **count** –**[inout]** input the number of descriptor want to find, it will output the number of descriptor has been found in the gattc cache with the given characteristic.

Returns

- ESP_OK: success
- other: failed

esp_gatt_status_t **esp_ble_gattc_get_include_service**(*esp_gatt_if_t* gattc_if, uint16_t conn_id, uint16_t start_handle, uint16_t end_handle, *esp_bt_uuid_t* *incl_uuid, *esp_gattc_incl_svc_elem_t* *result, uint16_t *count)

Find the include service with the given service handle in the gattc cache Note: It just get include service from local cache, won't get from remote devices.

Parameters

- **gattc_if** –**[in]** Gatt client access interface.
- **conn_id** –**[in]** connection ID which identify the server.
- **start_handle** –**[in]** the attribute start handle
- **end_handle** –**[in]** the attribute end handle
- **incl_uuid** –**[in]** the include service uuid
- **result** –**[out]** The pointer to the include service in the given service.
- **count** –**[inout]** input the number of include service want to find, it will output the number of include service has been found in the gattc cache with the given service.

Returns

- ESP_OK: success
- other: failed

esp_gatt_status_t **esp_ble_gattc_get_attr_count**(*esp_gatt_if_t* gattc_if, uint16_t conn_id, *esp_gatt_db_attr_type_t* type, uint16_t start_handle, uint16_t end_handle, uint16_t char_handle, uint16_t *count)

Find the attribute count with the given service or characteristic in the gattc cache.

Parameters

- **gattc_if** –**[in]** Gatt client access interface.
- **conn_id** –**[in]** connection ID which identify the server.
- **type** –**[in]** the attribute type.
- **start_handle** –**[in]** the attribute start handle, if the type is ESP_GATT_DB_DESCRIPTOR, this parameter should be ignore
- **end_handle** –**[in]** the attribute end handle, if the type is ESP_GATT_DB_DESCRIPTOR, this parameter should be ignore
- **char_handle** –**[in]** the characteristic handle, this parameter valid when the type is ESP_GATT_DB_DESCRIPTOR. If the type isn't ESP_GATT_DB_DESCRIPTOR, this parameter should be ignore.
- **count** –**[out]** output the number of attribute has been found in the gattc cache with the given attribute type.

Returns

- ESP_OK: success
- other: failed

esp_gatt_status_t **esp_ble_gattc_get_db**(*esp_gatt_if_t* gattc_if, uint16_t conn_id, uint16_t start_handle, uint16_t end_handle, *esp_gattc_db_elem_t* *db, uint16_t *count)

This function is called to get the GATT database. Note: It just get attribute data base from local cache, won't get from remote devices.

Parameters

- **gattc_if** –**[in]** Gatt client access interface.
- **start_handle** –**[in]** the attribute start handle
- **end_handle** –**[in]** the attribute end handle
- **conn_id** –**[in]** connection ID which identify the server.
- **db** –**[in]** output parameter which will contain the GATT database copy. Caller is responsible for freeing it.
- **count** –**[in]** number of elements in database.

Returns

- ESP_OK: success
- other: failed

esp_err_t **esp_ble_gattc_read_char**(*esp_gatt_if_t* gattc_if, uint16_t conn_id, uint16_t handle, *esp_gatt_auth_req_t* auth_req)

This function is called to read a service's characteristics of the given characteristic handle.

Parameters

- **gattc_if** –**[in]** Gatt client access interface.
- **conn_id** –**[in]** : connection ID.
- **handle** –**[in]** : characteritic handle to read.
- **auth_req** –**[in]** : authenticate request type

Returns

- ESP_OK: success
- other: failed

esp_err_t **esp_ble_gattc_read_by_type**(*esp_gatt_if_t* gattc_if, uint16_t conn_id, uint16_t start_handle, uint16_t end_handle, *esp_bt_uuid_t* *uuid, *esp_gatt_auth_req_t* auth_req)

This function is called to read a service' s characteristics of the given characteristic UUID.

Parameters

- **gattc_if** –**[in]** Gatt client access interface.
- **conn_id** –**[in]** : connection ID.
- **start_handle** –**[in]** : the attribute start handle.
- **end_handle** –**[in]** : the attribute end handle
- **uuid** –**[in]** : The UUID of attribute which will be read.
- **auth_req** –**[in]** : authenticate request type

Returns

- ESP_OK: success
- other: failed

esp_err_t **esp_ble_gattc_read_multiple**(*esp_gatt_if_t* gattc_if, uint16_t conn_id, *esp_gattc_multi_t* *read_multi, *esp_gatt_auth_req_t* auth_req)

This function is called to read multiple characteristic or characteristic descriptors.

Parameters

- **gattc_if** –**[in]** Gatt client access interface.
- **conn_id** –**[in]** : connection ID.
- **read_multi** –**[in]** : pointer to the read multiple parameter.
- **auth_req** –**[in]** : authenticate request type

Returns

- ESP_OK: success
- other: failed

esp_err_t **esp_ble_gattc_read_char_descr**(*esp_gatt_if_t* gattc_if, uint16_t conn_id, uint16_t handle, *esp_gatt_auth_req_t* auth_req)

This function is called to read a characteristics descriptor.

Parameters

- **gattc_if** –**[in]** Gatt client access interface.
- **conn_id** –**[in]** : connection ID.
- **handle** –**[in]** : descriptor handle to read.
- **auth_req** –**[in]** : authenticate request type

Returns

- ESP_OK: success
- other: failed

esp_err_t **esp_ble_gattc_write_char**(*esp_gatt_if_t* gattc_if, uint16_t conn_id, uint16_t handle, uint16_t value_len, uint8_t *value, *esp_gatt_write_type_t* write_type, *esp_gatt_auth_req_t* auth_req)

This function is called to write characteristic value.

Parameters

- **gattc_if** –**[in]** Gatt client access interface.
- **conn_id** –**[in]** : connection ID.
- **handle** –**[in]** : characteristic handle to write.
- **value_len** –**[in]** length of the value to be written.

- **value** –**[in]** : the value to be written.
- **write_type** –**[in]** : the type of attribute write operation.
- **auth_req** –**[in]** : authentication request.

Returns

- ESP_OK: success
- other: failed

esp_err_t **esp_ble_gattc_write_char_descr**(*esp_gatt_if_t* gattc_if, uint16_t conn_id, uint16_t handle, uint16_t value_len, uint8_t *value, *esp_gatt_write_type_t* write_type, *esp_gatt_auth_req_t* auth_req)

This function is called to write characteristic descriptor value.

Parameters

- **gattc_if** –**[in]** Gatt client access interface.
- **conn_id** –**[in]** : connection ID
- **handle** –**[in]** : descriptor hadle to write.
- **value_len** –**[in]** length of the value to be written.
- **value** –**[in]** : the value to be written.
- **write_type** –**[in]** : the type of attribute write operation.
- **auth_req** –**[in]** : authentication request.

Returns

- ESP_OK: success
- other: failed

esp_err_t **esp_ble_gattc_prepare_write**(*esp_gatt_if_t* gattc_if, uint16_t conn_id, uint16_t handle, uint16_t offset, uint16_t value_len, uint8_t *value, *esp_gatt_auth_req_t* auth_req)

This function is called to prepare write a characteristic value.

Parameters

- **gattc_if** –**[in]** Gatt client access interface.
- **conn_id** –**[in]** : connection ID.
- **handle** –**[in]** : characteristic handle to prepare write.
- **offset** –**[in]** : offset of the write value.
- **value_len** –**[in]** length of the value to be written.
- **value** –**[in]** : the value to be written.
- **auth_req** –**[in]** : authentication request.

Returns

- ESP_OK: success
- other: failed

esp_err_t **esp_ble_gattc_prepare_write_char_descr**(*esp_gatt_if_t* gattc_if, uint16_t conn_id, uint16_t handle, uint16_t offset, uint16_t value_len, uint8_t *value, *esp_gatt_auth_req_t* auth_req)

This function is called to prepare write a characteristic descriptor value.

Parameters

- **gattc_if** –**[in]** Gatt client access interface.
- **conn_id** –**[in]** : connection ID.
- **handle** –**[in]** : characteristic descriptor handle to prepare write.
- **offset** –**[in]** : offset of the write value.
- **value_len** –**[in]** length of the value to be written.
- **value** –**[in]** : the value to be written.
- **auth_req** –**[in]** : authentication request.

Returns

- ESP_OK: success
- other: failed

esp_err_t **esp_ble_gattc_execute_write**(*esp_gatt_if_t* gattc_if, uint16_t conn_id, bool is_execute)

This function is called to execute write a prepare write sequence.

Parameters

- **gattc_if** –**[in]** Gatt client access interface.
- **conn_id** –**[in]** : connection ID.
- **is_execute** –**[in]** : execute or cancel.

Returns

- ESP_OK: success
- other: failed

esp_err_t **esp_ble_gattc_register_for_notify**(*esp_gatt_if_t* gattc_if, *esp_bd_addr_t* server_bda, uint16_t handle)

This function is called to register for notification of a service.

Parameters

- **gattc_if** –**[in]** Gatt client access interface.
- **server_bda** –**[in]** : target GATT server.
- **handle** –**[in]** : GATT characteristic handle.

Returns

- ESP_OK: registration succeeds
- other: failed

esp_err_t **esp_ble_gattc_unregister_for_notify**(*esp_gatt_if_t* gattc_if, *esp_bd_addr_t* server_bda, uint16_t handle)

This function is called to de-register for notification of a service.

Parameters

- **gattc_if** –**[in]** Gatt client access interface.
- **server_bda** –**[in]** : target GATT server.
- **handle** –**[in]** : GATT characteristic handle.

Returns

- ESP_OK: unregister succeeds
- other: failed

esp_err_t **esp_ble_gattc_cache_refresh**(*esp_bd_addr_t* remote_bda)

Refresh the server cache store in the gattc stack of the remote device. If the device is connected, this API will restart the discovery of service information of the remote device.

Parameters **remote_bda** –**[in]** remote device BD address.

Returns

- ESP_OK: success
- other: failed

esp_err_t **esp_ble_gattc_cache_assoc**(*esp_gatt_if_t* gattc_if, *esp_bd_addr_t* src_addr, *esp_bd_addr_t* assoc_addr, bool is_assoc)

Add or delete the associated address with the source address. Note: The role of this API is mainly when the client side has stored a server-side database, when it needs to connect another device, but the device ' s attribute database is the same as the server database stored on the client-side, calling this API can use the database that the device has stored used as the peer server database to reduce the attribute database search and discovery process and speed up the connection time. The associated address mains that device want to used the database has stored in the local cache. The source address mains that device want to share the database to the associated address device.

Parameters

- **gattc_if** –**[in]** Gatt client access interface.
- **src_addr** –**[in]** the source address which provide the attribute table.
- **assoc_addr** –**[in]** the associated device address which went to share the attribute table with the source address.
- **is_assoc** –**[in]** true add the associated device address, false remove the associated device address.

Returns

- ESP_OK: success
- other: failed

esp_err_t **esp_ble_gattc_cache_get_addr_list** (*esp_gatt_if_t* gattc_if)

Get the address list which has store the attribute table in the gattc cache. There will callback ESP_GATTC_GET_ADDR_LIST_EVT event when get address list complete.

Parameters **gattc_if** –**[in]** Gatt client access interface.
Returns
- ESP_OK: success
- other: failed

esp_err_t **esp_ble_gattc_cache_clean** (*esp_bd_addr_t* remote_bda)

Clean the service cache of this device in the gattc stack,.

Parameters **remote_bda** –**[in]** remote device BD address.
Returns
- ESP_OK: success
- other: failed

Unions

union **esp_ble_gattc_cb_param_t**

#include <esp_gattc_api.h> Gatt client callback parameters union.

Public Members

struct *esp_ble_gattc_cb_param_t*::*gattc_reg_evt_param* **reg**

Gatt client callback param of ESP_GATTC_REG_EVT

struct *esp_ble_gattc_cb_param_t*::*gattc_open_evt_param* **open**

Gatt client callback param of ESP_GATTC_OPEN_EVT

struct *esp_ble_gattc_cb_param_t*::*gattc_close_evt_param* **close**

Gatt client callback param of ESP_GATTC_CLOSE_EVT

struct *esp_ble_gattc_cb_param_t*::*gattc_cfg_mtu_evt_param* **cfg_mtu**

Gatt client callback param of ESP_GATTC_CFG_MTU_EVT

struct *esp_ble_gattc_cb_param_t*::*gattc_search_cmpl_evt_param* **search_cmpl**

Gatt client callback param of ESP_GATTC_SEARCH_CMPL_EVT

struct *esp_ble_gattc_cb_param_t*::*gattc_search_res_evt_param* **search_res**

Gatt client callback param of ESP_GATTC_SEARCH_RES_EVT

struct *esp_ble_gattc_cb_param_t*::*gattc_read_char_evt_param* **read**

Gatt client callback param of ESP_GATTC_READ_CHAR_EVT

struct *esp_ble_gattc_cb_param_t*::*gattc_write_evt_param* **write**

Gatt client callback param of ESP_GATTC_WRITE_DESCR_EVT

struct *esp_ble_gattc_cb_param_t*::*gattc_exec_cmpl_evt_param* **exec_cmpl**

Gatt client callback param of ESP_GATTC_EXEC_EVT

struct *esp_ble_gattc_cb_param_t*::*gattc_notify_evt_param* **notify**

Gatt client callback param of ESP_GATTC_NOTIFY_EVT

struct *esp_ble_gattc_cb_param_t*::*gattc_srvc_chg_evt_param* **srvc_chg**

Gatt client callback param of ESP_GATTC_SRVC_CHG_EVT

struct *esp_ble_gattc_cb_param_t*::*gattc_congest_evt_param* **congest**

Gatt client callback param of ESP_GATTC_CONGEST_EVT

struct *esp_ble_gattc_cb_param_t*::*gattc_reg_for_notify_evt_param* **reg_for_notify**

Gatt client callback param of ESP_GATTC_REG_FOR_NOTIFY_EVT

struct *esp_ble_gattc_cb_param_t*::*gattc_unreg_for_notify_evt_param* **unreg_for_notify**

Gatt client callback param of ESP_GATTC_UNREG_FOR_NOTIFY_EVT

struct *esp_ble_gattc_cb_param_t*::*gattc_connect_evt_param* **connect**

Gatt client callback param of ESP_GATTC_CONNECT_EVT

struct *esp_ble_gattc_cb_param_t*::*gattc_disconnect_evt_param* **disconnect**

Gatt client callback param of ESP_GATTC_DISCONNECT_EVT

struct *esp_ble_gattc_cb_param_t*::*gattc_set_assoc_addr_cmp_evt_param* **set_assoc_cmp**

Gatt client callback param of ESP_GATTC_SET_ASSOC_EVT

struct *esp_ble_gattc_cb_param_t*::*gattc_get_addr_list_evt_param* **get_addr_list**

Gatt client callback param of ESP_GATTC_GET_ADDR_LIST_EVT

struct *esp_ble_gattc_cb_param_t*::*gattc_queue_full_evt_param* **queue_full**

Gatt client callback param of ESP_GATTC_QUEUE_FULL_EVT

struct *esp_ble_gattc_cb_param_t*::*gattc_dis_srvc_cmpl_evt_param* **dis_srvc_cmpl**

Gatt client callback param of ESP_GATTC_DIS_SRVC_CMPL_EVT

struct **gattc_cfg_mtu_evt_param**

#include <esp_gattc_api.h> ESP_GATTC_CFG_MTU_EVT.

Public Members

esp_gatt_status_t **status**

Operation status

uint16_t **conn_id**

Connection id

uint16_t **mtu**

MTU size

struct **gattc_close_evt_param**

#include <esp_gattc_api.h> ESP_GATTC_CLOSE_EVT.

Public Members

esp_gatt_status_t **status**

Operation status

uint16_t **conn_id**

Connection id

esp_bd_addr_t **remote_bda**

Remote bluetooth device address

esp_gatt_conn_reason_t **reason**

The reason of gatt connection close

struct **gattc_congest_evt_param**

#include <esp_gattc_api.h> ESP_GATTC_CONGEST_EVT.

Public Members

uint16_t **conn_id**

Connection id

bool **congested**

Congested or not

struct **gattc_connect_evt_param**

#include <esp_gattc_api.h> ESP_GATTC_CONNECT_EVT.

Public Members

uint16_t **conn_id**

Connection id

uint8_t **link_role**

Link role : master role = 0 ; slave role = 1

esp_bd_addr_t **remote_bda**

Remote bluetooth device address

esp_gatt_conn_params_t **conn_params**

current connection parameters

struct **gattc_dis_srvc_cmpl_evt_param**

#include <esp_gattc_api.h> ESP_GATTC_DIS_SRVC_CMPL_EVT.

Public Members

esp_gatt_status_t **status**

Operation status

uint16_t **conn_id**

Connection id

struct **gattc_disconnect_evt_param**

#include <esp_gattc_api.h> ESP_GATTC_DISCONNECT_EVT.

Public Members

esp_gatt_conn_reason_t **reason**

disconnection reason

uint16_t **conn_id**

Connection id

uint8_t **link_role**

Link role : master role = 0 ; slave role = 1

esp_bd_addr_t **remote_bda**

Remote bluetooth device address

struct **gattc_exec_cmpl_evt_param**

#include <esp_gattc_api.h> ESP_GATTC_EXEC_EVT.

Public Members

esp_gatt_status_t **status**

Operation status

uint16_t **conn_id**

Connection id

struct **gattc_get_addr_list_evt_param**

#include <esp_gattc_api.h> ESP_GATTC_GET_ADDR_LIST_EVT.

Public Members

esp_gatt_status_t **status**

Operation status

uint8_t **num_addr**

The number of address in the gattc cache address list

esp_bd_addr_t ***addr_list**

The pointer to the address list which has been get from the gattc cache

struct **gattc_notify_evt_param**

#include <esp_gattc_api.h> ESP_GATTC_NOTIFY_EVT.

Public Members

uint16_t **conn_id**

Connection id

esp_bd_addr_t **remote_bda**

Remote bluetooth device address

uint16_t **handle**

The Characteristic or descriptor handle

uint16_t **value_len**

Notify attribute value

uint8_t ***value**

Notify attribute value

bool **is_notify**

True means notify, false means indicate

struct **gattc_open_evt_param**

#include <esp_gattc_api.h> ESP_GATTC_OPEN_EVT.

Public Members

esp_gatt_status_t **status**

Operation status

uint16_t **conn_id**

Connection id

esp_bd_addr_t **remote_bda**

Remote bluetooth device address

uint16_t **mtu**

MTU size

struct **gattc_queue_full_evt_param**

#include <esp_gattc_api.h> ESP_GATTC_QUEUE_FULL_EVT.

Public Members

esp_gatt_status_t **status**

Operation status

uint16_t **conn_id**

Connection id

bool **is_full**

The gattc command queue is full or not

struct **gattc_read_char_evt_param**

#include <esp_gattc_api.h> ESP_GATTC_READ_CHAR_EVT, ESP_GATTC_READ_DESCR_EVT.

Public Members

esp_gatt_status_t **status**

Operation status

uint16_t **conn_id**

Connection id

uint16_t **handle**

Characteristic handle

uint8_t ***value**

Characteristic value

uint16_t **value_len**

Characteristic value length

struct **gattc_reg_evt_param**

#include <esp_gattc_api.h> ESP_GATTC_REG_EVT.

Public Members

esp_gatt_status_t **status**

Operation status

uint16_t **app_id**

Application id which input in register API

struct **gattc_reg_for_notify_evt_param**

#include <esp_gattc_api.h> ESP_GATTC_REG_FOR_NOTIFY_EVT.

Public Members

esp_gatt_status_t **status**

Operation status

uint16_t **handle**

The characteristic or descriptor handle

struct **gattc_search_cmpl_evt_param**

#include <esp_gattc_api.h> ESP_GATTC_SEARCH_CMPL_EVT.

Public Members

esp_gatt_status_t **status**

Operation status

uint16_t **conn_id**

Connection id

esp_service_source_t **searched_service_source**

The source of the service information

struct **gattc_search_res_evt_param**

#include <esp_gattc_api.h> ESP_GATTC_SEARCH_RES_EVT.

Public Members

uint16_t **conn_id**

Connection id

uint16_t **start_handle**

Service start handle

uint16_t **end_handle**

Service end handle

esp_gatt_id_t **srvc_id**

Service id, include service uuid and other information

bool **is_primary**

True if this is the primary service

struct **gattc_set_assoc_addr_cmp_evt_param**

#include <esp_gattc_api.h> ESP_GATTC_SET_ASSOC_EVT.

Public Members

esp_gatt_status_t **status**

Operation status

struct **gattc_srvc_chg_evt_param**

#include <esp_gattc_api.h> ESP_GATTC_SRVC_CHG_EVT.

Public Members

esp_bd_addr_t **remote_bda**

Remote bluetooth device address

struct **gattc_unreg_for_notify_evt_param**

#include <esp_gattc_api.h> ESP_GATTC_UNREG_FOR_NOTIFY_EVT.

Public Members

esp_gatt_status_t **status**

Operation status

uint16_t **handle**

The characteristic or descriptor handle

struct **gattc_write_evt_param**

#include <esp_gattc_api.h> ESP_GATTC_WRITE_CHAR_EVT, ESP_GATTC_PREP_WRITE_EVT, ESP_GATTC_WRITE_DESCR_EVT.

Public Members

esp_gatt_status_t **status**

Operation status

uint16_t **conn_id**

Connection id

uint16_t **handle**

The Characteristic or descriptor handle

uint16_t **offset**

The prepare write offset, this value is valid only when prepare write

Type Definitions

typedef void (***esp_gattc_cb_t**)(*esp_gattc_cb_event_t* event, *esp_gatt_if_t* gattc_if, *esp_ble_gattc_cb_param_t* *param)

GATT Client callback function type.

Param event : Event type
Param gattc_if : GATT client access interface, normally different gattc_if correspond to different profile
Param param : Point to callback parameter, currently is union type

Enumerations

enum **esp_gattc_cb_event_t**

GATT Client callback function events.

Values:

enumerator **ESP_GATTC_REG_EVT**

When GATT client is registered, the event comes

enumerator **ESP_GATTC_UNREG_EVT**

When GATT client is unregistered, the event comes

enumerator **ESP_GATTC_OPEN_EVT**

When GATT virtual connection is set up, the event comes

enumerator **ESP_GATTC_READ_CHAR_EVT**

When GATT characteristic is read, the event comes

enumerator **ESP_GATTC_WRITE_CHAR_EVT**

When GATT characteristic write operation completes, the event comes

enumerator **ESP_GATTC_CLOSE_EVT**

When GATT virtual connection is closed, the event comes

enumerator **ESP_GATTC_SEARCH_CMPL_EVT**

When GATT service discovery is completed, the event comes

enumerator **ESP_GATTC_SEARCH_RES_EVT**

When GATT service discovery result is got, the event comes

enumerator **ESP_GATTC_READ_DESCR_EVT**

When GATT characteristic descriptor read completes, the event comes

enumerator **ESP_GATTC_WRITE_DESCR_EVT**

When GATT characteristic descriptor write completes, the event comes

enumerator **ESP_GATTC_NOTIFY_EVT**

When GATT notification or indication arrives, the event comes

enumerator **ESP_GATTC_PREP_WRITE_EVT**

When GATT prepare-write operation completes, the event comes

enumerator **ESP_GATTC_EXEC_EVT**

When write execution completes, the event comes

enumerator **ESP_GATTC_ACL_EVT**

When ACL connection is up, the event comes

enumerator **ESP_GATTC_CANCEL_OPEN_EVT**

When GATT client ongoing connection is cancelled, the event comes

enumerator **ESP_GATTC_SRVC_CHG_EVT**

When "service changed" occurs, the event comes

enumerator **ESP_GATTC_ENC_CMPL_CB_EVT**

When encryption procedure completes, the event comes

enumerator **ESP_GATTC_CFG_MTU_EVT**

When configuration of MTU completes, the event comes

enumerator **ESP_GATTC_ADV_DATA_EVT**

When advertising of data, the event comes

enumerator **ESP_GATTC_MULT_ADV_ENB_EVT**

When multi-advertising is enabled, the event comes

enumerator **ESP_GATTC_MULT_ADV_UPD_EVT**

When multi-advertising parameters are updated, the event comes

enumerator **ESP_GATTC_MULT_ADV_DATA_EVT**

When multi-advertising data arrives, the event comes

enumerator **ESP_GATTC_MULT_ADV_DIS_EVT**

When multi-advertising is disabled, the event comes

enumerator **ESP_GATTC_CONGEST_EVT**

When GATT connection congestion comes, the event comes

enumerator **ESP_GATTC_BTH_SCAN_ENB_EVT**

When batch scan is enabled, the event comes

enumerator **ESP_GATTC_BTH_SCAN_CFG_EVT**

When batch scan storage is configured, the event comes

enumerator **ESP_GATTC_BTH_SCAN_RD_EVT**

When Batch scan read event is reported, the event comes

enumerator **ESP_GATTC_BTH_SCAN_THR_EVT**

When Batch scan threshold is set, the event comes

enumerator **ESP_GATTC_BTH_SCAN_PARAM_EVT**

When Batch scan parameters are set, the event comes

enumerator **ESP_GATTC_BTH_SCAN_DIS_EVT**

When Batch scan is disabled, the event comes

enumerator **ESP_GATTC_SCAN_FLT_CFG_EVT**

When Scan filter configuration completes, the event comes

enumerator **ESP_GATTC_SCAN_FLT_PARAM_EVT**

When Scan filter parameters are set, the event comes

enumerator **ESP_GATTC_SCAN_FLT_STATUS_EVT**

When Scan filter status is reported, the event comes

enumerator **ESP_GATTC_ADV_VSC_EVT**

When advertising vendor spec content event is reported, the event comes

enumerator **ESP_GATTC_REG_FOR_NOTIFY_EVT**

When register for notification of a service completes, the event comes

enumerator **ESP_GATTC_UNREG_FOR_NOTIFY_EVT**

When unregister for notification of a service completes, the event comes

enumerator **ESP_GATTC_CONNECT_EVT**

When the ble physical connection is set up, the event comes

enumerator **ESP_GATTC_DISCONNECT_EVT**

When the ble physical connection disconnected, the event comes

enumerator **ESP_GATTC_READ_MULTIPLE_EVT**

When the ble characteristic or descriptor multiple complete, the event comes

enumerator **ESP_GATTC_QUEUE_FULL_EVT**

When the gattc command queue full, the event comes

enumerator **ESP_GATTC_SET_ASSOC_EVT**

When the ble gattc set the associated address complete, the event comes

enumerator **ESP_GATTC_GET_ADDR_LIST_EVT**

When the ble get gattc address list in cache finish, the event comes

enumerator **ESP_GATTC_DIS_SRVC_CMPL_EVT**

When the ble discover service complete, the event comes

BLUFI API

Overview BLUFI is a profile based GATT to config ESP32 WIFI to connect/disconnect AP or setup a softap and etc. Use should concern these things:

1. The event sent from profile. Then you need to do something as the event indicate.
2. Security reference. You can write your own Security functions such as symmetrical encryption/decryption and checksum functions. Even you can define the "Key Exchange/Negotiation" procedure.

Application Example Check bluetooth folder in ESP-IDF examples, which contains the following application:

- This is the BLUFI demo. This demo can set ESP32's wifi to softap/station/softap&station mode and config wifi connections - bluetooth/blufi

API Reference

Header File

- components/bt/common/api/include/api/esp_blufi_api.h

Functions

esp_err_t **esp_blufi_register_callbacks**(*esp_blufi_callbacks_t* *callbacks)

This function is called to receive blufi callback event.

Parameters **callbacks** –**[in]** callback functions
Returns ESP_OK - success, other - failed

esp_err_t **esp_blufi_profile_init**(void)

This function is called to initialize blufi_profile.

Returns ESP_OK - success, other - failed

esp_err_t **esp_blufi_profile_deinit**(void)

This function is called to de-initialize blufi_profile.

Returns ESP_OK - success, other - failed

esp_err_t **esp_blufi_send_wifi_conn_report**(*wifi_mode_t* opmode, *esp_blufi_sta_conn_state_t* sta_conn_state, uint8_t softap_conn_num, *esp_blufi_extra_info_t* *extra_info)

This function is called to send wifi connection report.

Parameters
- **opmode** –: wifi opmode
- **sta_conn_state** –: station is already in connection or not
- **softap_conn_num** –: softap connection number
- **extra_info** –: extra information, such as sta_ssid, softap_ssid and etc.

Returns ESP_OK - success, other - failed

esp_err_t **esp_blufi_send_wifi_list**(uint16_t apCount, *esp_blufi_ap_record_t* *list)

This function is called to send wifi list.

Parameters
- **apCount** –: wifi list count
- **list** –: wifi list

Returns ESP_OK - success, other - failed

uint16_t **esp_blufi_get_version**(void)

Get BLUFI profile version.

Returns Most 8bit significant is Great version, Least 8bit is Sub version

esp_err_t **esp_blufi_send_error_info**(*esp_blufi_error_state_t* state)

This function is called to send blufi error information.

Parameters **state** –: error state
Returns ESP_OK - success, other - failed

esp_err_t **esp_blufi_send_custom_data**(uint8_t *data, uint32_t data_len)

This function is called to custom data.

Parameters

- **data** –: custom data value
- **data_len** –: the length of custom data

Returns ESP_OK - success, other - failed

Unions

union **esp_blufi_cb_param_t**

#include <esp_blufi_api.h> BLUFI callback parameters union.

Public Members

struct *esp_blufi_cb_param_t*::*blufi_init_finish_evt_param* **init_finish**

Blufi callback param of ESP_BLUFI_EVENT_INIT_FINISH

struct *esp_blufi_cb_param_t*::*blufi_deinit_finish_evt_param* **deinit_finish**

Blufi callback param of ESP_BLUFI_EVENT_DEINIT_FINISH

struct *esp_blufi_cb_param_t*::*blufi_set_wifi_mode_evt_param* **wifi_mode**

Blufi callback param of ESP_BLUFI_EVENT_INIT_FINISH

struct *esp_blufi_cb_param_t*::*blufi_connect_evt_param* **connect**

Blufi callback param of ESP_BLUFI_EVENT_CONNECT

struct *esp_blufi_cb_param_t*::*blufi_disconnect_evt_param* **disconnect**

Blufi callback param of ESP_BLUFI_EVENT_DISCONNECT

struct *esp_blufi_cb_param_t*::*blufi_recv_sta_bssid_evt_param* **sta_bssid**

Blufi callback param of ESP_BLUFI_EVENT_RECV_STA_BSSID

struct *esp_blufi_cb_param_t*::*blufi_recv_sta_ssid_evt_param* **sta_ssid**

Blufi callback param of ESP_BLUFI_EVENT_RECV_STA_SSID

struct *esp_blufi_cb_param_t*::*blufi_recv_sta_passwd_evt_param* **sta_passwd**

Blufi callback param of ESP_BLUFI_EVENT_RECV_STA_PASSWD

struct *esp_blufi_cb_param_t*::*blufi_recv_softap_ssid_evt_param* **softap_ssid**

Blufi callback param of ESP_BLUFI_EVENT_RECV_SOFTAP_SSID

struct *esp_blufi_cb_param_t*::*blufi_recv_softap_passwd_evt_param* **softap_passwd**

Blufi callback param of ESP_BLUFI_EVENT_RECV_SOFTAP_PASSWD

struct *esp_blufi_cb_param_t*::*blufi_recv_softap_max_conn_num_evt_param* **softap_max_conn_num**

Blufi callback param of ESP_BLUFI_EVENT_RECV_SOFTAP_MAX_CONN_NUM

struct *esp_blufi_cb_param_t*::*blufi_recv_softap_auth_mode_evt_param* **softap_auth_mode**

Blufi callback param of ESP_BLUFI_EVENT_RECV_SOFTAP_AUTH_MODE

struct *esp_blufi_cb_param_t*::*blufi_recv_softap_channel_evt_param* **softap_channel**

Blufi callback param of ESP_BLUFI_EVENT_RECV_SOFTAP_CHANNEL

struct *esp_blufi_cb_param_t*::*blufi_recv_username_evt_param* **username**

Blufi callback param of ESP_BLUFI_EVENT_RECV_USERNAME

struct *esp_blufi_cb_param_t*::*blufi_recv_ca_evt_param* **ca**

Blufi callback param of ESP_BLUFI_EVENT_RECV_CA_CERT

struct *esp_blufi_cb_param_t*::*blufi_recv_client_cert_evt_param* **client_cert**

Blufi callback param of ESP_BLUFI_EVENT_RECV_CLIENT_CERT

struct *esp_blufi_cb_param_t*::*blufi_recv_server_cert_evt_param* **server_cert**

Blufi callback param of ESP_BLUFI_EVENT_RECV_SERVER_CERT

struct *esp_blufi_cb_param_t*::*blufi_recv_client_pkey_evt_param* **client_pkey**

Blufi callback param of ESP_BLUFI_EVENT_RECV_CLIENT_PRIV_KEY

struct *esp_blufi_cb_param_t*::*blufi_recv_server_pkey_evt_param* **server_pkey**

Blufi callback param of ESP_BLUFI_EVENT_RECV_SERVER_PRIV_KEY

struct *esp_blufi_cb_param_t*::*blufi_get_error_evt_param* **report_error**

Blufi callback param of ESP_BLUFI_EVENT_REPORT_ERROR

struct *esp_blufi_cb_param_t*::*blufi_recv_custom_data_evt_param* **custom_data**

Blufi callback param of ESP_BLUFI_EVENT_RECV_CUSTOM_DATA

struct **blufi_connect_evt_param**

#include <esp_blufi_api.h> ESP_BLUFI_EVENT_CONNECT.

Public Members

esp_blufi_bd_addr_t **remote_bda**

Blufi Remote bluetooth device address

uint8_t **server_if**

server interface

uint16_t **conn_id**

Connection id

struct **blufi_deinit_finish_evt_param**

#include <esp_blufi_api.h> ESP_BLUFI_EVENT_DEINIT_FINISH.

Public Members

esp_blufi_deinit_state_t **state**

De-initial status

struct **blufi_disconnect_evt_param**

#include <esp_blufi_api.h> ESP_BLUFI_EVENT_DISCONNECT.

Public Members

esp_blufi_bd_addr_t **remote_bda**

Blufi Remote bluetooth device address

struct **blufi_get_error_evt_param**

#include <esp_blufi_api.h> ESP_BLUFI_EVENT_REPORT_ERROR.

Public Members

esp_blufi_error_state_t **state**

Blufi error state

struct **blufi_init_finish_evt_param**

#include <esp_blufi_api.h> ESP_BLUFI_EVENT_INIT_FINISH.

Public Members

esp_blufi_init_state_t **state**

Initial status

struct **blufi_recv_ca_evt_param**

#include <esp_blufi_api.h> ESP_BLUFI_EVENT_RECV_CA_CERT.

Public Members

uint8_t ***cert**

CA certificate point

int **cert_len**

CA certificate length

struct **blufi_recv_client_cert_evt_param**

#include <esp_blufi_api.h> ESP_BLUFI_EVENT_RECV_CLIENT_CERT

Public Members

uint8_t ***cert**

Client certificate point

int **cert_len**

Client certificate length

struct **blufi_recv_client_pkey_evt_param**

#include <esp_blufi_api.h> ESP_BLUFI_EVENT_RECV_CLIENT_PRIV_KEY

Public Members

uint8_t *__pkey__

Client Private Key point, if Client certificate not contain Key

int __pkey_len__

Client Private key length

struct __blufi_recv_custom_data_evt_param__

#include <esp_blufi_api.h> ESP_BLUFI_EVENT_RECV_CUSTOM_DATA.

Public Members

uint8_t *__data__

Custom data

uint32_t __data_len__

Custom data Length

struct __blufi_recv_server_cert_evt_param__

#include <esp_blufi_api.h> ESP_BLUFI_EVENT_RECV_SERVER_CERT

Public Members

uint8_t *__cert__

Client certificate point

int __cert_len__

Client certificate length

struct __blufi_recv_server_pkey_evt_param__

#include <esp_blufi_api.h> ESP_BLUFI_EVENT_RECV_SERVER_PRIV_KEY

Public Members

uint8_t *__pkey__

Client Private Key point, if Client certificate not contain Key

int __pkey_len__

Client Private key length

struct __blufi_recv_softap_auth_mode_evt_param__

#include <esp_blufi_api.h> ESP_BLUFI_EVENT_RECV_SOFTAP_AUTH_MODE.

Public Members

wifi_auth_mode_t **auth_mode**
Authentication mode

struct **blufi_recv_softap_channel_evt_param**
#include <esp_blufi_api.h> ESP_BLUFI_EVENT_RECV_SOFTAP_CHANNEL.

Public Members

uint8_t **channel**
Authentication mode

struct **blufi_recv_softap_max_conn_num_evt_param**
#include <esp_blufi_api.h> ESP_BLUFI_EVENT_RECV_SOFTAP_MAX_CONN_NUM.

Public Members

int **max_conn_num**
SSID

struct **blufi_recv_softap_passwd_evt_param**
#include <esp_blufi_api.h> ESP_BLUFI_EVENT_RECV_SOFTAP_PASSWD.

Public Members

uint8_t ***passwd**
Password

int **passwd_len**
Password Length

struct **blufi_recv_softap_ssid_evt_param**
#include <esp_blufi_api.h> ESP_BLUFI_EVENT_RECV_SOFTAP_SSID.

Public Members

uint8_t ***ssid**
SSID

int **ssid_len**
SSID length

struct **blufi_recv_sta_bssid_evt_param**
#include <esp_blufi_api.h> ESP_BLUFI_EVENT_RECV_STA_BSSID.

Public Members

uint8_t **bssid**[6]
BSSID

struct **blufi_recv_sta_passwd_evt_param**
#include <esp_blufi_api.h> ESP_BLUFI_EVENT_RECV_STA_PASSWD.

Public Members

uint8_t ***passwd**
Password

int **passwd_len**
Password Length

struct **blufi_recv_sta_ssid_evt_param**
#include <esp_blufi_api.h> ESP_BLUFI_EVENT_RECV_STA_SSID.

Public Members

uint8_t ***ssid**
SSID

int **ssid_len**
SSID length

struct **blufi_recv_username_evt_param**
#include <esp_blufi_api.h> ESP_BLUFI_EVENT_RECV_USERNAME.

Public Members

uint8_t ***name**
Username point

int **name_len**
Username length

struct **blufi_set_wifi_mode_evt_param**
#include <esp_blufi_api.h> ESP_BLUFI_EVENT_SET_WIFI_MODE.

Public Members

wifi_mode_t **op_mode**
Wifi operation mode

Structures

struct **esp_blufi_extra_info_t**

BLUFI extra information structure.

Public Members

uint8_t **sta_bssid**[6]

BSSID of station interface

bool **sta_bssid_set**

is BSSID of station interface set

uint8_t ***sta_ssid**

SSID of station interface

int **sta_ssid_len**

length of SSID of station interface

uint8_t ***sta_passwd**

password of station interface

int **sta_passwd_len**

length of password of station interface

uint8_t ***softap_ssid**

SSID of softap interface

int **softap_ssid_len**

length of SSID of softap interface

uint8_t ***softap_passwd**

password of station interface

int **softap_passwd_len**

length of password of station interface

uint8_t **softap_authmode**

authentication mode of softap interface

bool **softap_authmode_set**

is authentication mode of softap interface set

uint8_t **softap_max_conn_num**

max connection number of softap interface

bool **softap_max_conn_num_set**

is max connection number of softap interface set

uint8_t **softap_channel**

channel of softap interface

bool **softap_channel_set**

is channel of softap interface set

struct **esp_blufi_ap_record_t**

Description of an WiFi AP.

Public Members

uint8_t **ssid**[33]

SSID of AP

int8_t **rssi**

signal strength of AP

struct **esp_blufi_callbacks_t**

BLUFI callback functions type.

Public Members

esp_blufi_event_cb_t **event_cb**

BLUFI event callback

esp_blufi_negotiate_data_handler_t **negotiate_data_handler**

BLUFI negotiate data function for negotiate share key

esp_blufi_encrypt_func_t **encrypt_func**

BLUFI encrypt data function with share key generated by negotiate_data_handler

esp_blufi_decrypt_func_t **decrypt_func**

BLUFI decrypt data function with share key generated by negotiate_data_handler

esp_blufi_checksum_func_t **checksum_func**

BLUFI check sum function (FCS)

Macros

ESP_BLUFI_BD_ADDR_LEN

Bluetooth address length.

Type Definitions

typedef uint8_t **esp_blufi_bd_addr_t**[6]

Bluetooth device address.

typedef void (*`esp_blufi_event_cb_t`)(*esp_blufi_cb_event_t* event, *esp_blufi_cb_param_t* *param)

BLUFI event callback function type.

Param event : Event type
Param param : Point to callback parameter, currently is union type

typedef void (*`esp_blufi_negotiate_data_handler_t`)(uint8_t *data, int len, uint8_t **output_data, int *output_len, bool *need_free)

BLUFI negotiate data handler.

Param data : data from phone
Param len : length of data from phone
Param output_data : data want to send to phone
Param output_len : length of data want to send to phone
Param need_free : output reporting if memory needs to be freed or not *

typedef int (*`esp_blufi_encrypt_func_t`)(uint8_t iv8, uint8_t *crypt_data, int crypt_len)

BLUFI encrypt the data after negotiate a share key.

Param iv8 : initial vector(8bit), normally, blufi core will input packet sequence number
Param crypt_data : plain text and encrypted data, the encrypt function must support autochthonous encrypt
Param crypt_len : length of plain text
Return Nonnegative number is encrypted length, if error, return negative number;

typedef int (*`esp_blufi_decrypt_func_t`)(uint8_t iv8, uint8_t *crypt_data, int crypt_len)

BLUFI decrypt the data after negotiate a share key.

Param iv8 : initial vector(8bit), normally, blufi core will input packet sequence number
Param crypt_data : encrypted data and plain text, the encrypt function must support autochthonous decrypt
Param crypt_len : length of encrypted text
Return Nonnegative number is decrypted length, if error, return negative number;

typedef uint16_t (*`esp_blufi_checksum_func_t`)(uint8_t iv8, uint8_t *data, int len)

BLUFI checksum.

Param iv8 : initial vector(8bit), normally, blufi core will input packet sequence number
Param data : data need to checksum
Param len : length of data

Enumerations

enum `esp_blufi_cb_event_t`

Values:

enumerator `ESP_BLUFI_EVENT_INIT_FINISH`

enumerator `ESP_BLUFI_EVENT_DEINIT_FINISH`

enumerator `ESP_BLUFI_EVENT_SET_WIFI_OPMODE`

enumerator `ESP_BLUFI_EVENT_BLE_CONNECT`

enumerator **ESP_BLUFI_EVENT_BLE_DISCONNECT**

enumerator **ESP_BLUFI_EVENT_REQ_CONNECT_TO_AP**

enumerator **ESP_BLUFI_EVENT_REQ_DISCONNECT_FROM_AP**

enumerator **ESP_BLUFI_EVENT_GET_WIFI_STATUS**

enumerator **ESP_BLUFI_EVENT_DEAUTHENTICATE_STA**

enumerator **ESP_BLUFI_EVENT_RECV_STA_BSSID**

enumerator **ESP_BLUFI_EVENT_RECV_STA_SSID**

enumerator **ESP_BLUFI_EVENT_RECV_STA_PASSWD**

enumerator **ESP_BLUFI_EVENT_RECV_SOFTAP_SSID**

enumerator **ESP_BLUFI_EVENT_RECV_SOFTAP_PASSWD**

enumerator **ESP_BLUFI_EVENT_RECV_SOFTAP_MAX_CONN_NUM**

enumerator **ESP_BLUFI_EVENT_RECV_SOFTAP_AUTH_MODE**

enumerator **ESP_BLUFI_EVENT_RECV_SOFTAP_CHANNEL**

enumerator **ESP_BLUFI_EVENT_RECV_USERNAME**

enumerator **ESP_BLUFI_EVENT_RECV_CA_CERT**

enumerator **ESP_BLUFI_EVENT_RECV_CLIENT_CERT**

enumerator **ESP_BLUFI_EVENT_RECV_SERVER_CERT**

enumerator **ESP_BLUFI_EVENT_RECV_CLIENT_PRIV_KEY**

enumerator **ESP_BLUFI_EVENT_RECV_SERVER_PRIV_KEY**

enumerator **ESP_BLUFI_EVENT_RECV_SLAVE_DISCONNECT_BLE**

enumerator **ESP_BLUFI_EVENT_GET_WIFI_LIST**

enumerator **ESP_BLUFI_EVENT_REPORT_ERROR**

enumerator **ESP_BLUFI_EVENT_RECV_CUSTOM_DATA**

enum **esp_blufi_sta_conn_state_t**

BLUFI config status.

Values:

enumerator **ESP_BLUFI_STA_CONN_SUCCESS**

enumerator **ESP_BLUFI_STA_CONN_FAIL**

enum **esp_blufi_init_state_t**

BLUFI init status.

Values:

enumerator **ESP_BLUFI_INIT_OK**

enumerator **ESP_BLUFI_INIT_FAILED**

enum **esp_blufi_deinit_state_t**

BLUFI deinit status.

Values:

enumerator **ESP_BLUFI_DEINIT_OK**

enumerator **ESP_BLUFI_DEINIT_FAILED**

enum **esp_blufi_error_state_t**

Values:

enumerator **ESP_BLUFI_SEQUENCE_ERROR**

enumerator **ESP_BLUFI_CHECKSUM_ERROR**

enumerator **ESP_BLUFI_DECRYPT_ERROR**

enumerator **ESP_BLUFI_ENCRYPT_ERROR**

enumerator **ESP_BLUFI_INIT_SECURITY_ERROR**

enumerator **ESP_BLUFI_DH_MALLOC_ERROR**

enumerator **ESP_BLUFI_DH_PARAM_ERROR**

enumerator **ESP_BLUFI_READ_PARAM_ERROR**

enumerator **ESP_BLUFI_MAKE_PUBLIC_ERROR**

enumerator **ESP_BLUFI_DATA_FORMAT_ERROR**

2.1.4 CLASSIC BT

CLASSIC BLUETOOTH GAP API

API Reference

Header File

- components/bt/host/bluedroid/api/include/api/esp_gap_bt_api.h

Functions

static inline uint32_t **esp_bt_gap_get_cod_srvc**(uint32_t cod)

get major service field of COD

Parameters **cod** –**[in]** Class of Device
Returns major service bits

static inline uint32_t **esp_bt_gap_get_cod_major_dev**(uint32_t cod)

get major device field of COD

Parameters **cod** –**[in]** Class of Device
Returns major device bits

static inline uint32_t **esp_bt_gap_get_cod_minor_dev**(uint32_t cod)

get minor service field of COD

Parameters **cod** –**[in]** Class of Device
Returns minor service bits

static inline uint32_t **esp_bt_gap_get_cod_format_type**(uint32_t cod)

get format type of COD

Parameters **cod** –**[in]** Class of Device
Returns format type

static inline bool **esp_bt_gap_is_valid_cod**(uint32_t cod)

decide the integrity of COD

Parameters **cod** –**[in]** Class of Device
Returns
- true if cod is valid
- false otherise

esp_err_t **esp_bt_gap_register_callback**(*esp_bt_gap_cb_t* callback)

register callback function. This function should be called after esp_bluedroid_enable() completes successfully

Returns
- ESP_OK : Succeed
- ESP_FAIL: others

esp_err_t **esp_bt_gap_set_scan_mode**(*esp_bt_connection_mode_t* c_mode, *esp_bt_discovery_mode_t* d_mode)

Set discoverability and connectability mode for legacy bluetooth. This function should be called after esp_bluedroid_enable() completes successfully.

Parameters
- **c_mode** –**[in]** : one of the enums of esp_bt_connection_mode_t
- **d_mode** –**[in]** : one of the enums of esp_bt_discovery_mode_t

Returns
- ESP_OK : Succeed
- ESP_ERR_INVALID_ARG: if argument invalid
- ESP_ERR_INVALID_STATE: if bluetooth stack is not yet enabled

- ESP_FAIL: others

esp_err_t **esp_bt_gap_start_discovery**(*esp_bt_inq_mode_t* mode, uint8_t inq_len, uint8_t num_rsps)

This function starts Inquiry and Name Discovery. This function should be called after esp_bluedroid_enable() completes successfully. When Inquiry is halted and cached results do not contain device name, then Name Discovery will connect to the peer target to get the device name. esp_bt_gap_cb_t will be called with ESP_BT_GAP_DISC_STATE_CHANGED_EVT when Inquriry is started or Name Discovery is completed. esp_bt_gap_cb_t will be called with ESP_BT_GAP_DISC_RES_EVT each time the two types of discovery results are got.

Parameters

- **mode** –**[in]** - Inquiry mode
- **inq_len** –**[in]** - Inquiry duration in 1.28 sec units, ranging from 0x01 to 0x30. This parameter only specifies the total duration of the Inquiry process,
  - when this time expires, Inquiry will be halted.
- **num_rsps** –**[in]** - Number of responses that can be received before the Inquiry is halted, value 0 indicates an unlimited number of responses.

Returns

- ESP_OK : Succeed
- ESP_ERR_INVALID_STATE: if bluetooth stack is not yet enabled
- ESP_ERR_INVALID_ARG: if invalid parameters are provided
- ESP_FAIL: others

esp_err_t **esp_bt_gap_cancel_discovery**(void)

Cancel Inquiry and Name Discovery. This function should be called after esp_bluedroid_enable() completes successfully. esp_bt_gap_cb_t will be called with ESP_BT_GAP_DISC_STATE_CHANGED_EVT if Inquiry or Name Discovery is cancelled by calling this function.

Returns

- ESP_OK : Succeed
- ESP_ERR_INVALID_STATE: if bluetooth stack is not yet enabled
- ESP_FAIL: others

esp_err_t **esp_bt_gap_get_remote_services**(*esp_bd_addr_t* remote_bda)

Start SDP to get remote services. This function should be called after esp_bluedroid_enable() completes successfully. esp_bt_gap_cb_t will be called with ESP_BT_GAP_RMT_SRVCS_EVT after service discovery ends.

Returns

- ESP_OK : Succeed
- ESP_ERR_INVALID_STATE: if bluetooth stack is not yet enabled
- ESP_FAIL: others

esp_err_t **esp_bt_gap_get_remote_service_record**(*esp_bd_addr_t* remote_bda, *esp_bt_uuid_t* *uuid)

Start SDP to look up the service matching uuid on the remote device. This function should be called after esp_bluedroid_enable() completes successfully.

esp_bt_gap_cb_t will be called with ESP_BT_GAP_RMT_SRVC_REC_EVT after service discovery ends

Returns

- ESP_OK : Succeed
- ESP_ERR_INVALID_STATE: if bluetooth stack is not yet enabled
- ESP_FAIL: others

uint8_t ***esp_bt_gap_resolve_eir_data**(uint8_t *eir, *esp_bt_eir_type_t* type, uint8_t *length)

This function is called to get EIR data for a specific type.

Parameters

- **eir** –**[in]** - pointer of raw eir data to be resolved
- **type** –**[in]** - specific EIR data type
- **length** –**[out]** - return the length of EIR data excluding fields of length and data type

Returns pointer of starting position of eir data excluding eir data type, NULL if not found

esp_err_t **esp_bt_gap_config_eir_data**(*esp_bt_eir_data_t* *eir_data)

This function is called to config EIR data.

esp_bt_gap_cb_t will be called with ESP_BT_GAP_CONFIG_EIR_DATA_EVT after config EIR ends.

Parameters **eir_data** –**[in]** - pointer of EIR data content

Returns

- ESP_OK : Succeed
- ESP_ERR_INVALID_STATE: if bluetooth stack is not yet enabled
- ESP_ERR_INVALID_ARG: if param is invalid
- ESP_FAIL: others

esp_err_t **esp_bt_gap_set_cod**(*esp_bt_cod_t* cod, *esp_bt_cod_mode_t* mode)

This function is called to set class of device. The structure esp_bt_gap_cb_t will be called with ESP_BT_GAP_SET_COD_EVT after set COD ends. Some profile have special restrictions on class of device, changes may cause these profile do not work.

Parameters

- **cod** –**[in]** - class of device
- **mode** –**[in]** - setting mode

Returns

- ESP_OK : Succeed
- ESP_ERR_INVALID_STATE: if bluetooth stack is not yet enabled
- ESP_ERR_INVALID_ARG: if param is invalid
- ESP_FAIL: others

esp_err_t **esp_bt_gap_get_cod**(*esp_bt_cod_t* *cod)

This function is called to get class of device.

Parameters **cod** –**[out]** - class of device

Returns

- ESP_OK : Succeed
- ESP_FAIL: others

esp_err_t **esp_bt_gap_read_rssi_delta**(*esp_bd_addr_t* remote_addr)

This function is called to read RSSI delta by address after connected. The RSSI value returned by ESP_BT_GAP_READ_RSSI_DELTA_EVT.

Parameters **remote_addr** –**[in]** - remote device address, corresponding to a certain connection handle

Returns

- ESP_OK : Succeed
- ESP_FAIL: others

esp_err_t **esp_bt_gap_remove_bond_device**(*esp_bd_addr_t* bd_addr)

Removes a device from the security database list of peer device.

Parameters **bd_addr** –**[in]** : BD address of the peer device

Returns - ESP_OK : success

- ESP_FAIL : failed

int **esp_bt_gap_get_bond_device_num**(void)

Get the device number from the security database list of peer device. It will return the device bonded number immediately.

Returns - >= 0 : bonded devices number

- ESP_FAIL : failed

esp_err_t **esp_bt_gap_get_bond_device_list**(int *dev_num, *esp_bd_addr_t* *dev_list)

Get the device from the security database list of peer device. It will return the device bonded information immediately.

Parameters

- **dev_num** –**[inout]** Indicate the dev_list array(buffer) size as input. If dev_num is large enough, it means the actual number as output. Suggest that dev_num value equal to esp_ble_get_bond_device_num().
- **dev_list** –**[out]** an array(buffer) of `esp_bd_addr_t` type. Use for storing the bonded devices address. The dev_list should be allocated by who call this API.

Returns

- ESP_OK : Succeed
- ESP_ERR_INVALID_STATE: if bluetooth stack is not yet enabled
- ESP_FAIL: others

esp_err_t **esp_bt_gap_set_pin**(*esp_bt_pin_type_t* pin_type, uint8_t pin_code_len, *esp_bt_pin_code_t* pin_code)

Set pin type and default pin code for legacy pairing.

Parameters

- **pin_type** –**[in]** Use variable or fixed pin. If pin_type is ESP_BT_PIN_TYPE_VARIABLE, pin_code and pin_code_len will be ignored, and ESP_BT_GAP_PIN_REQ_EVT will come when control requests for pin code. Else, will use fixed pin code and not callback to users.
- **pin_code_len** –**[in]** Length of pin_code
- **pin_code** –**[in]** Pin_code

Returns - ESP_OK : success

- ESP_ERR_INVALID_STATE: if bluetooth stack is not yet enabled
- other : failed

esp_err_t **esp_bt_gap_pin_reply**(*esp_bd_addr_t* bd_addr, bool accept, uint8_t pin_code_len, *esp_bt_pin_code_t* pin_code)

Reply the pin_code to the peer device for legacy pairing when ESP_BT_GAP_PIN_REQ_EVT is coming.

Parameters

- **bd_addr** –**[in]** BD address of the peer
- **accept** –**[in]** Pin_code reply successful or declined.
- **pin_code_len** –**[in]** Length of pin_code
- **pin_code** –**[in]** Pin_code

Returns - ESP_OK : success

- ESP_ERR_INVALID_STATE: if bluetooth stack is not yet enabled
- other : failed

esp_err_t **esp_bt_gap_set_security_param**(*esp_bt_sp_param_t* param_type, void *value, uint8_t len)

Set a GAP security parameter value. Overrides the default value.

Parameters

- **param_type** –**[in]** : the type of the param which is to be set
- **value** –**[in]** : the param value
- **len** –**[in]** : the length of the param value

Returns - ESP_OK : success

- ESP_ERR_INVALID_STATE: if bluetooth stack is not yet enabled
- other : failed

esp_err_t **esp_bt_gap_ssp_passkey_reply**(*esp_bd_addr_t* bd_addr, bool accept, uint32_t passkey)

Reply the key value to the peer device in the legacy connection stage.

Parameters

- **bd_addr** –**[in]** : BD address of the peer
- **accept** –**[in]** : passkey entry successful or declined.
- **passkey** –**[in]** : passkey value, must be a 6 digit number, can be lead by 0.

Returns - ESP_OK : success

- ESP_ERR_INVALID_STATE: if bluetooth stack is not yet enabled
- other : failed

esp_err_t **esp_bt_gap_ssp_confirm_reply**(*esp_bd_addr_t* bd_addr, bool accept)

Reply the confirm value to the peer device in the legacy connection stage.

Parameters
- **bd_addr** –**[in]** : BD address of the peer device
- **accept** –**[in]** : numbers to compare are the same or different

Returns - ESP_OK : success
- ESP_ERR_INVALID_STATE: if bluetooth stack is not yet enabled
- other : failed

esp_err_t **esp_bt_gap_set_afh_channels**(*esp_bt_gap_afh_channels* channels)

Set the AFH channels.

Parameters **channels** –**[in]** : The n th such field (in the range 0 to 78) contains the value for channel n : 0 means channel n is bad. 1 means channel n is unknown. The most significant bit is reserved and shall be set to 0. At least 20 channels shall be marked as unknown.

Returns - ESP_OK : success
- ESP_ERR_INVALID_STATE: if bluetooth stack is not yet enabled
- other : failed

esp_err_t **esp_bt_gap_read_remote_name**(*esp_bd_addr_t* remote_bda)

Read the remote device name.

Parameters **remote_bda** –**[in]** The remote device' s address

Returns - ESP_OK : success
- ESP_ERR_INVALID_STATE: if bluetooth stack is not yet enabled
- other : failed

esp_err_t **esp_bt_gap_set_qos**(*esp_bd_addr_t* remote_bda, uint32_t t_poll)

Config Quality of service.

Parameters
- **remote_bda** –**[in]** The remote device' s address
- **t_poll** –**[in]** Poll interval, the maximum time between transmissions which from the master to a particular slave on the ACL logical transport. unit is 0.625ms

Returns - ESP_OK : success
- ESP_ERR_INVALID_STATE: if bluetooth stack is not yet enabled
- other : failed

Unions

union **esp_bt_gap_cb_param_t**

#include <esp_gap_bt_api.h> GAP state callback parameters.

Public Members

struct *esp_bt_gap_cb_param_t*::*disc_res_param* **disc_res**

discovery result parameter struct

struct *esp_bt_gap_cb_param_t*::*disc_state_changed_param* **disc_st_chg**

discovery state changed parameter struct

struct *esp_bt_gap_cb_param_t*::*rmt_srvcs_param* **rmt_srvcs**

services of remote device parameter struct

struct *esp_bt_gap_cb_param_t*::*rmt_srvc_rec_param* **rmt_srvc_rec**

specific service record from remote device parameter struct

struct *esp_bt_gap_cb_param_t*::*read_rssi_delta_param* **read_rssi_delta**

read rssi parameter struct

struct *esp_bt_gap_cb_param_t*::*config_eir_data_param* **config_eir_data**

config EIR data

struct *esp_bt_gap_cb_param_t*::*auth_cmpl_param* **auth_cmpl**

authentication complete parameter struct

struct *esp_bt_gap_cb_param_t*::*pin_req_param* **pin_req**

pin request parameter struct

struct *esp_bt_gap_cb_param_t*::*cfm_req_param* **cfm_req**

confirm request parameter struct

struct *esp_bt_gap_cb_param_t*::*key_notif_param* **key_notif**

passkey notif parameter struct

struct *esp_bt_gap_cb_param_t*::*key_req_param* **key_req**

passkey request parameter struct

struct *esp_bt_gap_cb_param_t*::*set_afh_channels_param* **set_afh_channels**

set AFH channel parameter struct

struct *esp_bt_gap_cb_param_t*::*read_rmt_name_param* **read_rmt_name**

read Remote Name parameter struct

struct *esp_bt_gap_cb_param_t*::*mode_chg_param* **mode_chg**

mode change event parameter struct

struct *esp_bt_gap_cb_param_t*::*bt_remove_bond_dev_cmpl_evt_param* **remove_bond_dev_cmpl**

Event parameter of ESP_BT_GAP_REMOVE_BOND_DEV_COMPLETE_EVT

struct *esp_bt_gap_cb_param_t*::*qos_cmpl_param* **qos_cmpl**

QoS complete parameter struct

struct **auth_cmpl_param**

#include <esp_gap_bt_api.h> ESP_BT_GAP_AUTH_CMPL_EVT.

Public Members

esp_bd_addr_t **bda**

remote bluetooth device address

esp_bt_status_t **stat**

authentication complete status

uint8_t **device_name**[(248) + 1]

device name

struct **bt_remove_bond_dev_cmpl_evt_param**

#include <esp_gap_bt_api.h> ESP_BT_GAP_REMOVE_BOND_DEV_COMPLETE_EVT.

Public Members

esp_bd_addr_t **bda**

remote bluetooth device address

esp_bt_status_t **status**

Indicate the remove bond device operation success status

struct **cfm_req_param**

#include <esp_gap_bt_api.h> ESP_BT_GAP_CFM_REQ_EVT.

Public Members

esp_bd_addr_t **bda**

remote bluetooth device address

uint32_t **num_val**

the numeric value for comparison.

struct **config_eir_data_param**

#include <esp_gap_bt_api.h> ESP_BT_GAP_CONFIG_EIR_DATA_EVT *.

Public Members

esp_bt_status_t **stat**

config EIR status: ESP_BT_STATUS_SUCCESS: config success ESP_BT_STATUS_EIR_TOO_LARGE: the EIR data is more than 240B. The EIR may not contain the whole data. others: failed

uint8_t **eir_type_num**

the number of EIR types in EIR type

esp_bt_eir_type_t **eir_type**[12]

EIR types in EIR type

struct **disc_res_param**

#include <esp_gap_bt_api.h> ESP_BT_GAP_DISC_RES_EVT.

Public Members

esp_bd_addr_t **bda**

remote bluetooth device address

int **num_prop**

number of properties got

esp_bt_gap_dev_prop_t ***prop**

properties discovered from the new device

struct **disc_state_changed_param**

#include <esp_gap_bt_api.h> ESP_BT_GAP_DISC_STATE_CHANGED_EVT.

Public Members

esp_bt_gap_discovery_state_t **state**

discovery state

struct **key_notif_param**

#include <esp_gap_bt_api.h> ESP_BT_GAP_KEY_NOTIF_EVT.

Public Members

esp_bd_addr_t **bda**

remote bluetooth device address

uint32_t **passkey**

the numeric value for passkey entry.

struct **key_req_param**

#include <esp_gap_bt_api.h> ESP_BT_GAP_KEY_REQ_EVT.

Public Members

esp_bd_addr_t **bda**

remote bluetooth device address

struct **mode_chg_param**

#include <esp_gap_bt_api.h> ESP_BT_GAP_MODE_CHG_EVT.

Public Members

esp_bd_addr_t **bda**

remote bluetooth device address

esp_bt_pm_mode_t **mode**

PM mode

struct **pin_req_param**

#include <esp_gap_bt_api.h> ESP_BT_GAP_PIN_REQ_EVT.

Public Members

esp_bd_addr_t **bda**

remote bluetooth device address

bool **min_16_digit**

TRUE if the pin returned must be at least 16 digits

struct **qos_cmpl_param**

#include <esp_gap_bt_api.h> ESP_BT_GAP_QOS_CMPL_EVT.

Public Members

esp_bt_status_t **stat**

QoS status

esp_bd_addr_t **bda**

remote bluetooth device address

uint32_t **t_poll**

poll interval, the maximum time between transmissions which from the master to a particular slave on the ACL logical transport. unit is 0.625ms.

struct **read_rmt_name_param**

#include <esp_gap_bt_api.h> ESP_BT_GAP_READ_REMOTE_NAME_EVT.

Public Members

esp_bt_status_t **stat**

read Remote Name status

uint8_t **rmt_name**[(248) + 1]

Remote device name

esp_bd_addr_t **bda**

remote bluetooth device address

struct **read_rssi_delta_param**

#include <esp_gap_bt_api.h> ESP_BT_GAP_READ_RSSI_DELTA_EVT *.

Public Members

esp_bd_addr_t **bda**

remote bluetooth device address

esp_bt_status_t **stat**

read rssi status

int8_t **rssi_delta**

rssi delta value range -128 ~127, The value zero indicates that the RSSI is inside the Golden Receive Power Range, the Golden Receive Power Range is from ESP_BT_GAP_RSSI_LOW_THRLD to ESP_BT_GAP_RSSI_HIGH_THRLD

struct **rmt_srvc_rec_param**

#include <esp_gap_bt_api.h> ESP_BT_GAP_RMT_SRVC_REC_EVT.

Public Members

esp_bd_addr_t **bda**

remote bluetooth device address

esp_bt_status_t **stat**

service search status

struct **rmt_srvcs_param**

#include <esp_gap_bt_api.h> ESP_BT_GAP_RMT_SRVCS_EVT.

Public Members

esp_bd_addr_t **bda**

remote bluetooth device address

esp_bt_status_t **stat**

service search status

int **num_uuids**

number of UUID in uuid_list

esp_bt_uuid_t ***uuid_list**

list of service UUIDs of remote device

struct **set_afh_channels_param**

#include <esp_gap_bt_api.h> ESP_BT_GAP_SET_AFH_CHANNELS_EVT.

Public Members

esp_bt_status_t **stat**

set AFH channel status

Structures

struct **esp_bt_cod_t**

Class of device.

Public Members

uint32_t **reserved_2**

undefined

uint32_t **minor**

minor class

uint32_t **major**

major class

uint32_t **service**

service class

uint32_t **reserved_8**

undefined

struct **esp_bt_gap_dev_prop_t**

Bluetooth Device Property Descriptor.

Public Members

esp_bt_gap_dev_prop_type_t **type**

Device property type

int **len**

Device property value length

void ***val**

Device property value

struct **esp_bt_eir_data_t**

EIR data content, according to "Supplement to the Bluetooth Core Specification".

Public Members

bool **fec_required**

FEC is required or not, true by default

bool **include_txpower**

EIR data include TX power, false by default

bool **include_uuid**

EIR data include UUID, false by default

uint8_t **flag**

EIR flags, see ESP_BT_EIR_FLAG for details, EIR will not include flag if it is 0, 0 by default

uint16_t **manufacturer_len**

Manufacturer data length, 0 by default

uint8_t ***p_manufacturer_data**

Manufacturer data point

uint16_t **url_len**

URL length, 0 by default

uint8_t ***p_url**

URL point

Macros

ESP_BT_GAP_RSSI_HIGH_THRLD

RSSI threshold.

High RSSI threshold

ESP_BT_GAP_RSSI_LOW_THRLD

Low RSSI threshold

ESP_BT_GAP_AFH_CHANNELS_LEN

ESP_BT_GAP_MAX_BDNAME_LEN

Maximum bytes of Bluetooth device name.

ESP_BT_GAP_EIR_DATA_LEN

Maximum size of EIR Significant part.

ESP_BT_EIR_TYPE_FLAGS

Extended Inquiry Response data type.

Flag with information such as BR/EDR and LE support

ESP_BT_EIR_TYPE_INCMPL_16BITS_UUID

Incomplete list of 16-bit service UUIDs

ESP_BT_EIR_TYPE_CMPL_16BITS_UUID

Complete list of 16-bit service UUIDs

ESP_BT_EIR_TYPE_INCMPL_32BITS_UUID

Incomplete list of 32-bit service UUIDs

ESP_BT_EIR_TYPE_CMPL_32BITS_UUID
Complete list of 32-bit service UUIDs

ESP_BT_EIR_TYPE_INCMPL_128BITS_UUID
Incomplete list of 128-bit service UUIDs

ESP_BT_EIR_TYPE_CMPL_128BITS_UUID
Complete list of 128-bit service UUIDs

ESP_BT_EIR_TYPE_SHORT_LOCAL_NAME
Shortened Local Name

ESP_BT_EIR_TYPE_CMPL_LOCAL_NAME
Complete Local Name

ESP_BT_EIR_TYPE_TX_POWER_LEVEL
Tx power level, value is 1 octet ranging from -127 to 127, unit is dBm

ESP_BT_EIR_TYPE_URL
Uniform resource identifier

ESP_BT_EIR_TYPE_MANU_SPECIFIC
Manufacturer specific data

ESP_BT_EIR_TYPE_MAX_NUM
MAX number of EIR type

ESP_BT_EIR_FLAG_LIMIT_DISC

ESP_BT_EIR_FLAG_GEN_DISC

ESP_BT_EIR_FLAG_BREDR_NOT_SPT

ESP_BT_EIR_FLAG_DMT_CONTROLLER_SPT

ESP_BT_EIR_FLAG_DMT_HOST_SPT

ESP_BT_EIR_MAX_LEN

ESP_BT_PIN_CODE_LEN
Max pin code length

ESP_BT_IO_CAP_OUT

ESP_BT_IO_CAP_IO

ESP_BT_IO_CAP_IN

ESP_BT_IO_CAP_NONE

ESP_BT_PM_MD_ACTIVE

Active mode

ESP_BT_PM_MD_HOLD

Hold mode

ESP_BT_PM_MD_SNIFF

Sniff mode

ESP_BT_PM_MD_PARK

Park state

ESP_BT_COD_SRVC_BIT_MASK

Bits of major service class field.

Major service bit mask

ESP_BT_COD_SRVC_BIT_OFFSET

Major service bit offset

ESP_BT_COD_MAJOR_DEV_BIT_MASK

Bits of major device class field.

Major device bit mask

ESP_BT_COD_MAJOR_DEV_BIT_OFFSET

Major device bit offset

ESP_BT_COD_MINOR_DEV_BIT_MASK

Bits of minor device class field.

Minor device bit mask

ESP_BT_COD_MINOR_DEV_BIT_OFFSET

Minor device bit offset

ESP_BT_COD_FORMAT_TYPE_BIT_MASK

Bits of format type.

Format type bit mask

ESP_BT_COD_FORMAT_TYPE_BIT_OFFSET

Format type bit offset

ESP_BT_COD_FORMAT_TYPE_1

Class of device format type 1.

ESP_BT_GAP_MIN_INQ_LEN

Minimum and Maximum inquiry length Minimum inquiry duration, unit is 1.28s

ESP_BT_GAP_MAX_INQ_LEN

Maximum inquiry duration, unit is 1.28s

Type Definitions

typedef uint8_t **esp_bt_gap_afh_channels**[10]

typedef uint8_t **esp_bt_eir_type_t**

typedef uint8_t **esp_bt_pin_code_t**[16]

Pin Code (upto 128 bits) MSB is 0

typedef uint8_t **esp_bt_io_cap_t**

Combination of the IO Capability

typedef uint8_t **esp_bt_pm_mode_t**

typedef void (***esp_bt_gap_cb_t**)(*esp_bt_gap_cb_event_t* event, *esp_bt_gap_cb_param_t* *param)

bluetooth GAP callback function type

Param event : Event type
Param param : Pointer to callback parameter

Enumerations

enum **esp_bt_cod_mode_t**

class of device settings

Values:

enumerator **ESP_BT_SET_COD_MAJOR_MINOR**

overwrite major, minor class

enumerator **ESP_BT_SET_COD_SERVICE_CLASS**

set the bits in the input, the current bit will remain

enumerator **ESP_BT_CLR_COD_SERVICE_CLASS**

clear the bits in the input, others will remain

enumerator **ESP_BT_SET_COD_ALL**

overwrite major, minor, set the bits in service class

enumerator **ESP_BT_INIT_COD**

overwrite major, minor, and service class

enum **esp_bt_connection_mode_t**

Discoverability and Connectability mode.

Values:

enumerator **ESP_BT_NON_CONNECTABLE**

Non-connectable

enumerator **ESP_BT_CONNECTABLE**

Connectable

enum **esp_bt_discovery_mode_t**

Values:

enumerator **ESP_BT_NON_DISCOVERABLE**

Non-discoverable

enumerator **ESP_BT_LIMITED_DISCOVERABLE**

Limited Discoverable

enumerator **ESP_BT_GENERAL_DISCOVERABLE**

General Discoverable

enum **esp_bt_gap_dev_prop_type_t**

Bluetooth Device Property type.

Values:

enumerator **ESP_BT_GAP_DEV_PROP_BDNAME**

Bluetooth device name, value type is int8_t []

enumerator **ESP_BT_GAP_DEV_PROP_COD**

Class of Device, value type is uint32_t

enumerator **ESP_BT_GAP_DEV_PROP_RSSI**

Received Signal strength Indication, value type is int8_t, ranging from -128 to 127

enumerator **ESP_BT_GAP_DEV_PROP_EIR**

Extended Inquiry Response, value type is uint8_t []

enum **esp_bt_cod_srvc_t**

Major service class field of Class of Device, mutiple bits can be set.

Values:

enumerator **ESP_BT_COD_SRVC_NONE**

None indicates an invalid value

enumerator **ESP_BT_COD_SRVC_LMTD_DISCOVER**

Limited Discoverable Mode

enumerator **ESP_BT_COD_SRVC_POSITIONING**

Positioning (Location identification)

enumerator **ESP_BT_COD_SRVC_NETWORKING**

Networking, e.g. LAN, Ad hoc

enumerator **ESP_BT_COD_SRVC_RENDERING**

Rendering, e.g. Printing, Speakers

enumerator **ESP_BT_COD_SRVC_CAPTURING**

Capturing, e.g. Scanner, Microphone

enumerator **ESP_BT_COD_SRVC_OBJ_TRANSFER**

Object Transfer, e.g. v-Inbox, v-Folder

enumerator **ESP_BT_COD_SRVC_AUDIO**

Audio, e.g. Speaker, Microphone, Headset service

enumerator **ESP_BT_COD_SRVC_TELEPHONY**

Telephony, e.g. Cordless telephony, Modem, Headset service

enumerator **ESP_BT_COD_SRVC_INFORMATION**

Information, e.g., WEB-server, WAP-server

enum **esp_bt_pin_type_t**

Values:

enumerator **ESP_BT_PIN_TYPE_VARIABLE**

Refer to BTM_PIN_TYPE_VARIABLE

enumerator **ESP_BT_PIN_TYPE_FIXED**

Refer to BTM_PIN_TYPE_FIXED

enum **esp_bt_sp_param_t**

Values:

enumerator **ESP_BT_SP_IOCAP_MODE**

Set IO mode

enum **esp_bt_cod_major_dev_t**

Major device class field of Class of Device.

Values:

enumerator **ESP_BT_COD_MAJOR_DEV_MISC**

Miscellaneous

enumerator **ESP_BT_COD_MAJOR_DEV_COMPUTER**

Computer

enumerator **ESP_BT_COD_MAJOR_DEV_PHONE**

Phone(cellular, cordless, pay phone, modem

enumerator **ESP_BT_COD_MAJOR_DEV_LAN_NAP**

LAN, Network Access Point

enumerator **ESP_BT_COD_MAJOR_DEV_AV**

Audio/Video(headset, speaker, stereo, video display, VCR

enumerator **ESP_BT_COD_MAJOR_DEV_PERIPHERAL**

Peripheral(mouse, joystick, keyboard)

enumerator **ESP_BT_COD_MAJOR_DEV_IMAGING**

Imaging(printer, scanner, camera, display

enumerator **ESP_BT_COD_MAJOR_DEV_WEARABLE**

Wearable

enumerator **ESP_BT_COD_MAJOR_DEV_TOY**

Toy

enumerator **ESP_BT_COD_MAJOR_DEV_HEALTH**

Health

enumerator **ESP_BT_COD_MAJOR_DEV_UNCATEGORIZED**

Uncategorized: device not specified

enum **esp_bt_gap_discovery_state_t**

Bluetooth Device Discovery state

Values:

enumerator **ESP_BT_GAP_DISCOVERY_STOPPED**

Device discovery stopped

enumerator **ESP_BT_GAP_DISCOVERY_STARTED**

Device discovery started

enum **esp_bt_gap_cb_event_t**

BT GAP callback events.

Values:

enumerator **ESP_BT_GAP_DISC_RES_EVT**

Device discovery result event

enumerator **ESP_BT_GAP_DISC_STATE_CHANGED_EVT**

Discovery state changed event

enumerator **ESP_BT_GAP_RMT_SRVCS_EVT**

Get remote services event

enumerator **ESP_BT_GAP_RMT_SRVC_REC_EVT**

Get remote service record event

enumerator **ESP_BT_GAP_AUTH_CMPL_EVT**

Authentication complete event

enumerator **ESP_BT_GAP_PIN_REQ_EVT**

Legacy Pairing Pin code request

enumerator **ESP_BT_GAP_CFM_REQ_EVT**

Security Simple Pairing User Confirmation request.

enumerator **ESP_BT_GAP_KEY_NOTIF_EVT**

Security Simple Pairing Passkey Notification

enumerator **ESP_BT_GAP_KEY_REQ_EVT**

Security Simple Pairing Passkey request

enumerator **ESP_BT_GAP_READ_RSSI_DELTA_EVT**

Read rssi event

enumerator **ESP_BT_GAP_CONFIG_EIR_DATA_EVT**

Config EIR data event

enumerator **ESP_BT_GAP_SET_AFH_CHANNELS_EVT**

Set AFH channels event

enumerator **ESP_BT_GAP_READ_REMOTE_NAME_EVT**

Read Remote Name event

enumerator **ESP_BT_GAP_MODE_CHG_EVT**

enumerator **ESP_BT_GAP_REMOVE_BOND_DEV_COMPLETE_EVT**

remove bond device complete event

enumerator **ESP_BT_GAP_QOS_CMPL_EVT**

QOS complete event

enumerator **ESP_BT_GAP_EVT_MAX**

enum **esp_bt_inq_mode_t**

Inquiry Mode

Values:

enumerator **ESP_BT_INQ_MODE_GENERAL_INQUIRY**

General inquiry mode

enumerator **ESP_BT_INQ_MODE_LIMITED_INQUIRY**

Limited inquiry mode

Bluetooth A2DP API

Application Example Check bluetooth/bluedroid/classic_bt folder in ESP-IDF examples, which contains the following application:

- This is a A2DP sink client demo. This demo can be discovered and connected by A2DP source device and receive the audio stream from remote device - bluetooth/bluedroid/classic_bt/a2dp_sink

API Reference

Header File

- components/bt/host/bluedroid/api/include/api/esp_a2dp_api.h

Functions

esp_err_t **esp_a2d_register_callback**(*esp_a2d_cb_t* callback)

Register application callback function to A2DP module. This function should be called only after esp_bluedroid_enable() completes successfully, used by both A2DP source and sink.

Parameters **callback** –**[in]** A2DP event callback function

Returns

- ESP_OK: success
- ESP_INVALID_STATE: if bluetooth stack is not yet enabled
- ESP_FAIL: if callback is a NULL function pointer

esp_err_t **esp_a2d_sink_register_data_callback**(*esp_a2d_sink_data_cb_t* callback)

Register A2DP sink data output function; For now the output is PCM data stream decoded from SBC format. This function should be called only after esp_bluedroid_enable() completes successfully, used only by A2DP sink. The callback is invoked in the context of A2DP sink task whose stack size is configurable through menuconfig.

Parameters **callback** –**[in]** A2DP sink data callback function

Returns

- ESP_OK: success
- ESP_INVALID_STATE: if bluetooth stack is not yet enabled
- ESP_FAIL: if callback is a NULL function pointer

esp_err_t **esp_a2d_sink_init**(void)

Initialize the bluetooth A2DP sink module. This function should be called after esp_bluedroid_enable() completes successfully, and ESP_A2D_PROF_STATE_EVT with ESP_A2D_INIT_SUCCESS will reported to the APP layer. Note: A2DP can work independently. If you want to use AVRC together, you should initiate AVRC first. This function should be called after esp_bluedroid_enable() completes successfully.

Returns

- ESP_OK: if the initialization request is sent successfully
- ESP_INVALID_STATE: if bluetooth stack is not yet enabled
- ESP_FAIL: others

esp_err_t **esp_a2d_sink_deinit**(void)

De-initialize for A2DP sink module. This function should be called only after esp_bluedroid_enable() completes successfully, and ESP_A2D_PROF_STATE_EVT with ESP_A2D_DEINIT_SUCCESS will reported to APP layer.

Returns

- ESP_OK: if the deinitialization request is sent successfully
- ESP_INVALID_STATE: if bluetooth stack is not yet enabled
- ESP_FAIL: others

esp_err_t **esp_a2d_sink_connect** (*esp_bd_addr_t* remote_bda)

Connect to remote bluetooth A2DP source device. This API must be called after esp_a2d_sink_init() and before esp_a2d_sink_deinit().

Parameters **remote_bda** –**[in]** remote bluetooth device address

Returns

- ESP_OK: connect request is sent to lower layer successfully
- ESP_INVALID_STATE: if bluetooth stack is not yet enabled
- ESP_FAIL: others

esp_err_t **esp_a2d_sink_disconnect** (*esp_bd_addr_t* remote_bda)

Disconnect from the remote A2DP source device. This API must be called after esp_a2d_sink_init() and before esp_a2d_sink_deinit().

Parameters **remote_bda** –**[in]** remote bluetooth device address

Returns

- ESP_OK: disconnect request is sent to lower layer successfully
- ESP_INVALID_STATE: if bluetooth stack is not yet enabled
- ESP_FAIL: others

esp_err_t **esp_a2d_media_ctrl** (*esp_a2d_media_ctrl_t* ctrl)

Media control commands. This API can be used for both A2DP sink and source and must be called after esp_a2d_sink_init() and before esp_a2d_sink_deinit().

Parameters **ctrl** –**[in]** control commands for A2DP data channel

Returns

- ESP_OK: control command is sent to lower layer successfully
- ESP_INVALID_STATE: if bluetooth stack is not yet enabled
- ESP_FAIL: others

esp_err_t **esp_a2d_source_init** (void)

Initialize the bluetooth A2DP source module. A2DP can work independently. If you want to use AVRC together, you should initiate AVRC first. This function should be called after esp_bluedroid_enable() completes successfully, and ESP_A2D_PROF_STATE_EVT with ESP_A2D_INIT_SUCCESS will reported to the APP layer. Note: A2DP can work independently. If you want to use AVRC together, you should initiate AVRC first.

Returns

- ESP_OK: if the initialization request is sent to lower layer successfully
- ESP_INVALID_STATE: if bluetooth stack is not yet enabled
- ESP_FAIL: others

esp_err_t **esp_a2d_source_deinit** (void)

De-initialize for A2DP source module. This function should be called only after esp_bluedroid_enable() completes successfully, and ESP_A2D_PROF_STATE_EVT with ESP_A2D_DEINIT_SUCCESS will reported to APP layer.

Returns

- ESP_OK: success
- ESP_INVALID_STATE: if bluetooth stack is not yet enabled
- ESP_FAIL: others

esp_err_t **esp_a2d_source_register_data_callback** (*esp_a2d_source_data_cb_t* callback)

Register A2DP source data input function. For now, the input shoule be PCM data stream. This function should be called only after esp_bluedroid_enable() completes successfully. The callback is invoked in the context of A2DP source task whose stack size is configurable through menuconfig.

Parameters **callback** –**[in]** A2DP source data callback function

Returns

- ESP_OK: success
- ESP_INVALID_STATE: if bluetooth stack is not yet enabled
- ESP_FAIL: if callback is a NULL function pointer

esp_err_t **esp_a2d_source_connect** (*esp_bd_addr_t* remote_bda)

Connect to remote A2DP sink device. This API must be called after esp_a2d_source_init() and before esp_a2d_source_deinit().

Parameters **remote_bda** –**[in]** remote bluetooth device address

Returns

- ESP_OK: connect request is sent to lower layer successfully
- ESP_INVALID_STATE: if bluetooth stack is not yet enabled
- ESP_FAIL: others

esp_err_t **esp_a2d_source_disconnect** (*esp_bd_addr_t* remote_bda)

Disconnect from the remote A2DP sink device. This API must be called after esp_a2d_source_init() and before esp_a2d_source_deinit().

Parameters **remote_bda** –**[in]** remote bluetooth device address

Returns

- ESP_OK: disconnect request is sent to lower layer
- ESP_INVALID_STATE: if bluetooth stack is not yet enabled
- ESP_FAIL: others

Unions

union **esp_a2d_cb_param_t**

#include <esp_a2dp_api.h> A2DP state callback parameters.

Public Members

struct *esp_a2d_cb_param_t*::*a2d_conn_stat_param* **conn_stat**

A2DP connection status

struct *esp_a2d_cb_param_t*::*a2d_audio_stat_param* **audio_stat**

audio stream playing state

struct *esp_a2d_cb_param_t*::*a2d_audio_cfg_param* **audio_cfg**

media codec configuration information

struct *esp_a2d_cb_param_t*::*media_ctrl_stat_param* **media_ctrl_stat**

status in acknowledgement to media control commands

struct *esp_a2d_cb_param_t*::*a2d_prof_stat_param* **a2d_prof_stat**

status to indicate a2d prof init or deinit

struct **a2d_audio_cfg_param**

#include <esp_a2dp_api.h> ESP_A2D_AUDIO_CFG_EVT.

Public Members

esp_bd_addr_t **remote_bda**

remote bluetooth device address

esp_a2d_mcc_t **mcc**

A2DP media codec capability information

struct **a2d_audio_stat_param**

#include <esp_a2dp_api.h> ESP_A2D_AUDIO_STATE_EVT.

Public Members

esp_a2d_audio_state_t **state**

one of the values from esp_a2d_audio_state_t

esp_bd_addr_t **remote_bda**

remote bluetooth device address

struct **a2d_conn_stat_param**

#include <esp_a2dp_api.h> ESP_A2D_CONNECTION_STATE_EVT.

Public Members

esp_a2d_connection_state_t **state**

one of values from esp_a2d_connection_state_t

esp_bd_addr_t **remote_bda**

remote bluetooth device address

esp_a2d_disc_rsn_t **disc_rsn**

reason of disconnection for "DISCONNECTED"

struct **a2d_prof_stat_param**

#include <esp_a2dp_api.h> ESP_A2D_PROF_STATE_EVT.

Public Members

esp_a2d_init_state_t **init_state**

a2dp profile state param

struct **media_ctrl_stat_param**

#include <esp_a2dp_api.h> ESP_A2D_MEDIA_CTRL_ACK_EVT.

Public Members

esp_a2d_media_ctrl_t **cmd**

media control commands to acknowledge

esp_a2d_media_ctrl_ack_t **status**

acknowledgement to media control commands

Structures

struct **esp_a2d_mcc_t**

A2DP media codec capabilities union

Public Members

esp_a2d_mct_t **type**

A2DP media codec type

uint8_t **sbc**[(4)]

SBC codec capabilities

uint8_t **m12**[(4)]

MPEG-1,2 audio codec capabilities

uint8_t **m24**[(6)]

MPEG-2, 4 AAC audio codec capabilities

uint8_t **atrac**[(7)]

ATRAC family codec capabilities

union *esp_a2d_mcc_t*::[anonymous] **cie**

A2DP codec information element

Macros

ESP_A2D_MCT_SBC

Media codec types supported by A2DP.

SBC

ESP_A2D_MCT_M12

MPEG-1, 2 Audio

ESP_A2D_MCT_M24

MPEG-2, 4 AAC

ESP_A2D_MCT_ATRAC

ATRAC family

ESP_A2D_MCT_NON_A2DP

ESP_A2D_CIE_LEN_SBC

ESP_A2D_CIE_LEN_M12

ESP_A2D_CIE_LEN_M24

ESP_A2D_CIE_LEN_ATRAC

Type Definitions

typedef uint8_t **esp_a2d_mct_t**

typedef void (***esp_a2d_cb_t**)(*esp_a2d_cb_event_t* event, *esp_a2d_cb_param_t* *param)

A2DP profile callback function type.

Param event : Event type
Param param : Pointer to callback parameter

typedef void (***esp_a2d_sink_data_cb_t**)(const uint8_t *buf, uint32_t len)

A2DP sink data callback function.

Param buf **[in]** : pointer to the data received from A2DP source device and is PCM format decoded from SBC decoder; buf references to a static memory block and can be overwritten by upcoming data
Param len **[in]** : size(in bytes) in buf

typedef int32_t (***esp_a2d_source_data_cb_t**)(uint8_t *buf, int32_t len)

A2DP source data read callback function.

Param buf **[in]** : buffer to be filled with PCM data stream from higher layer
Param len **[in]** : size(in bytes) of data block to be copied to buf. -1 is an indication to user that data buffer shall be flushed
Return size of bytes read successfully, if the argument len is -1, this value is ignored.

Enumerations

enum **esp_a2d_connection_state_t**

Bluetooth A2DP connection states.

Values:

enumerator **ESP_A2D_CONNECTION_STATE_DISCONNECTED**

connection released

enumerator **ESP_A2D_CONNECTION_STATE_CONNECTING**

connecting remote device

enumerator **ESP_A2D_CONNECTION_STATE_CONNECTED**

connection established

enumerator **ESP_A2D_CONNECTION_STATE_DISCONNECTING**

disconnecting remote device

enum **esp_a2d_disc_rsn_t**

Bluetooth A2DP disconnection reason.

Values:

enumerator **ESP_A2D_DISC_RSN_NORMAL**

Finished disconnection that is initiated by local or remote device

enumerator **ESP_A2D_DISC_RSN_ABNORMAL**

Abnormal disconnection caused by signal loss

enum **esp_a2d_audio_state_t**

Bluetooth A2DP datapath states.

Values:

enumerator **ESP_A2D_AUDIO_STATE_REMOTE_SUSPEND**

audio stream datapath suspended by remote device

enumerator **ESP_A2D_AUDIO_STATE_STOPPED**

audio stream datapath stopped

enumerator **ESP_A2D_AUDIO_STATE_STARTED**

audio stream datapath started

enum **esp_a2d_media_ctrl_ack_t**

A2DP media control command acknowledgement code.

Values:

enumerator **ESP_A2D_MEDIA_CTRL_ACK_SUCCESS**

media control command is acknowledged with success

enumerator **ESP_A2D_MEDIA_CTRL_ACK_FAILURE**

media control command is acknowledged with failure

enumerator **ESP_A2D_MEDIA_CTRL_ACK_BUSY**

media control command is rejected, as previous command is not yet acknowledged

enum **esp_a2d_media_ctrl_t**

A2DP media control commands.

Values:

enumerator **ESP_A2D_MEDIA_CTRL_NONE**

Not for application use, use inside stack only.

enumerator **ESP_A2D_MEDIA_CTRL_CHECK_SRC_RDY**

check whether AVDTP is connected, only used in A2DP source

enumerator **ESP_A2D_MEDIA_CTRL_START**

command to set up media transmission channel

enumerator **ESP_A2D_MEDIA_CTRL_STOP**

command to stop media transmission

enumerator **ESP_A2D_MEDIA_CTRL_SUSPEND**

command to suspend media transmission

enum **esp_a2d_init_state_t**

Bluetooth A2DP Initiation states.

Values:

enumerator **ESP_A2D_DEINIT_SUCCESS**

A2DP profile deinit successful event

enumerator **ESP_A2D_INIT_SUCCESS**

A2DP profile deinit successful event

enum **esp_a2d_cb_event_t**

A2DP callback events.

Values:

enumerator **ESP_A2D_CONNECTION_STATE_EVT**

connection state changed event

enumerator **ESP_A2D_AUDIO_STATE_EVT**

audio stream transmission state changed event

enumerator **ESP_A2D_AUDIO_CFG_EVT**

audio codec is configured, only used for A2DP SINK

enumerator **ESP_A2D_MEDIA_CTRL_ACK_EVT**

acknowledge event in response to media control commands

enumerator **ESP_A2D_PROF_STATE_EVT**

indicate a2dp init&deinit complete

BT AVRCP APIs

Overview Bluetooth AVRCP reference APIs.

API Reference

Header File

- components/bt/host/bluedroid/api/include/api/esp_avrc_api.h

Functions

esp_err_t **esp_avrc_ct_register_callback**(*esp_avrc_ct_cb_t* callback)

Register application callbacks to AVRCP module. This function should be called after esp_bluedroid_enable() completes successfully.

Parameters **callback** –**[in]** AVRCP controller callback function

Returns

- ESP_OK: success
- ESP_ERR_INVALID_STATE: if bluetooth stack is not yet enabled
- ESP_FAIL: others

esp_err_t **esp_avrc_ct_init**(void)

Initialize the bluetooth AVRCP controller module, This function should be called after esp_bluedroid_enable() completes successfully. Note: AVRC cannot work independently, AVRC should be used along with A2DP and AVRC should be initialized before A2DP.

Returns

- ESP_OK: success
- ESP_ERR_INVALID_STATE: if bluetooth stack is not yet enabled
- ESP_FAIL: others

esp_err_t **esp_avrc_ct_deinit**(void)

De-initialize AVRCP controller module. This function should be called after after esp_bluedroid_enable() completes successfully. Note: AVRC cannot work independently, AVRC should be used along with A2DP and AVRC should be deinitialized before A2DP.

Returns

- ESP_OK: success
- ESP_ERR_INVALID_STATE: if bluetooth stack is not yet enabled
- ESP_FAIL: others

esp_err_t **esp_avrc_ct_send_set_player_value_cmd**(uint8_t tl, uint8_t attr_id, uint8_t value_id)

Send player application settings command to AVRCP target. This function should be called after ESP_AVRC_CT_CONNECTION_STATE_EVT is received and AVRCP connection is established.

Parameters

- **tl** –**[in]** : transaction label, 0 to 15, consecutive commands should use different values
- **attr_id** –**[in]** : player application setting attribute IDs from one of esp_avrc_ps_attr_ids_t
- **value_id** –**[in]** : attribute value defined for the specific player application setting attribute

Returns

- ESP_OK: success
- ESP_ERR_INVALID_STATE: if bluetooth stack is not yet enabled
- ESP_FAIL: others

esp_err_t **esp_avrc_ct_send_get_rn_capabilities_cmd**(uint8_t tl)

Send GetCapabilities PDU to AVRCP target to retrieve remote device' s supported notification event_ids. This function should be called after ESP_AVRC_CT_CONNECTION_STATE_EVT is received and AVRCP connection is established.

Parameters **tl** –**[in]** : transaction label, 0 to 15, consecutive commands should use different values

Returns

- ESP_OK: success
- ESP_ERR_INVALID_STATE: if bluetooth stack is not yet enabled
- ESP_FAIL: others

esp_err_t **esp_avrc_ct_send_register_notification_cmd**(uint8_t tl, uint8_t event_id, uint32_t event_parameter)

Send register notification command to AVRCP target. This function should be called after ESP_AVRC_CT_CONNECTION_STATE_EVT is received and AVRCP connection is established.

Parameters

- **tl** –**[in]** : transaction label, 0 to 15, consecutive commands should use different values.
- **event_id** –**[in]** : id of events, e.g. ESP_AVRC_RN_PLAY_STATUS_CHANGE, ESP_AVRC_RN_TRACK_CHANGE, etc.
- **event_parameter** –**[in]** : playback interval for ESP_AVRC_RN_PLAY_POS_CHANGED; For other events , value of this parameter is ignored.

Returns

- ESP_OK: success
- ESP_ERR_INVALID_STATE: if bluetooth stack is not yet enabled
- ESP_ERR_NOT_SUPPORTED: if the event_id is not supported in current implementation
- ESP_FAIL: others

esp_err_t **esp_avrc_ct_send_set_absolute_volume_cmd**(uint8_t tl, uint8_t volume)

Send set absolute volume command to AVRCP target. This function should be called after ESP_AVRC_CT_CONNECTION_STATE_EVT is received and AVRCP connection is established.

Parameters
- **tl** –**[in]** : transaction label, 0 to 15, consecutive commands should use different values
- **volume** –**[in]** : volume, 0 to 0x7f, means 0% to 100%

Returns
- ESP_OK: success
- ESP_ERR_INVALID_STATE: if bluetooth stack is not yet enabled
- ESP_ERR_NOT_SUPPORTED: if the event_id is not supported in current implementation
- ESP_FAIL: others

esp_err_t **esp_avrc_ct_send_metadata_cmd**(uint8_t tl, uint8_t attr_mask)

Send metadata command to AVRCP target. This function should be called after ESP_AVRC_CT_CONNECTION_STATE_EVT is received and AVRCP connection is established.

Parameters
- **tl** –**[in]** : transaction label, 0 to 15, consecutive commands should use different values.
- **attr_mask** –**[in]** : mask of attributes, e.g. ESP_AVRC_MD_ATTR_ID_TITLE | ESP_AVRC_MD_ATTR_ID_ARTIST.

Returns
- ESP_OK: success
- ESP_ERR_INVALID_STATE: if bluetooth stack is not yet enabled
- ESP_FAIL: others

esp_err_t **esp_avrc_ct_send_passthrough_cmd**(uint8_t tl, uint8_t key_code, uint8_t key_state)

Send passthrough command to AVRCP target. This function should be called after ESP_AVRC_CT_CONNECTION_STATE_EVT is received and AVRCP connection is established.

Parameters
- **tl** –**[in]** : transaction label, 0 to 15, consecutive commands should use different values.
- **key_code** –**[in]** : passthrough command code, e.g. ESP_AVRC_PT_CMD_PLAY, ESP_AVRC_PT_CMD_STOP, etc.
- **key_state** –**[in]** : passthrough command key state, ESP_AVRC_PT_CMD_STATE_PRESSED or ESP_AVRC_PT_CMD_STATE_RELEASED

Returns
- ESP_OK: success
- ESP_ERR_INVALID_STATE: if bluetooth stack is not yet enabled
- ESP_FAIL: others

esp_err_t **esp_avrc_tg_register_callback**(*esp_avrc_tg_cb_t* callback)

Register application callbacks to AVRCP target module. This function should be called after esp_bluedroid_enable() completes successfully.

Parameters **callback** –**[in]** AVRCP target callback function

Returns
- ESP_OK: success
- ESP_ERR_INVALID_STATE: if bluetooth stack is not yet enabled
- ESP_FAIL: others

esp_err_t **esp_avrc_tg_init**(void)

Initialize the bluetooth AVRCP target module, This function should be called after esp_bluedroid_enable() completes successfully. Note: AVRC cannot work independently, AVRC should be used along with A2DP and AVRC should be initialized before A2DP.

Returns
- ESP_OK: success
- ESP_ERR_INVALID_STATE: if bluetooth stack is not yet enabled

- ESP_FAIL: others

esp_err_t **esp_avrc_tg_deinit**(void)

De-initialize AVRCP target module. This function should be called after after esp_bluedroid_enable() completes successfully. Note: AVRC cannot work independently, AVRC should be used along with A2DP and AVRC should be deinitialized before A2DP.

Returns

- ESP_OK: success
- ESP_ERR_INVALID_STATE: if bluetooth stack is not yet enabled
- ESP_FAIL: others

esp_err_t **esp_avrc_tg_get_psth_cmd_filter**(*esp_avrc_psth_filter_t* filter, *esp_avrc_psth_bit_mask_t* *cmd_set)

Get the current filter of remote passthrough commands on AVRC target. Filter is given by filter type and bit mask for the passthrough commands. This function should be called after esp_avrc_tg_init(). For filter type ESP_AVRC_PSTH_FILTER_ALLOWED_CMD, the retrieved command set is constant and it covers all of the passthrough commands that can possibly be supported. For filter type ESP_AVRC_PSTH_FILTER_SUPPORT_COMMANDS, the retrieved command set covers the passthrough commands selected to be supported according to current configuration. The configuration can be changed using esp_avrc_tg_set_psth_cmd_filter().

Returns

- ESP_OK: success
- ESP_ERR_INVALID_STATE: if bluetooth stack is not enabled or AVRC TG is not initialized
- ESP_ERR_INVALID_ARG: if filter type is invalid or cmd_set is NULL
- ESP_FAIL: otherwise

esp_err_t **esp_avrc_tg_set_psth_cmd_filter**(*esp_avrc_psth_filter_t* filter, const *esp_avrc_psth_bit_mask_t* *cmd_set)

Set the filter of remote passthrough commands on AVRC target. Filter is given by filter type and bit mask for the passthrough commands. This function should be called after esp_avrc_tg_init().

If filter type is ESP_AVRC_PSTH_FILTER_SUPPORT_CMD, the passthrough commands which are set "1" as given in cmd_set will generate ESP_AVRC_CT_PASSTHROUGH_RSP_EVT callback event and are auto-accepted in the protocol stack, other commands are replied with response type "NOT IMPLEMENTED" (8). The set of supported commands should be a subset of allowed command set. The allowed command set can be retrieved using esp_avrc_tg_get_psth_cmd_filter() with filter type "ESP_AVRC_PSTH_FILTER_ALLOWED_CMD" .

Filter type "ESP_AVRC_PSTH_FILTER_ALLOWED_CMD" does not apply to this function.

Returns

- ESP_OK: success
- ESP_ERR_INVALID_STATE: if bluetooth stack is not enabled
- ESP_ERR_INVALID_ARG: if filter type is invalid or cmd_set is NULL
- ESP_ERR_NOT_SUPPORTED:: if filter type is ESP_AVRC_PSTH_FILTER_ALLOWED_CMD, or cmd_set includes unallowed commands

bool **esp_avrc_psth_bit_mask_operation**(*esp_avrc_bit_mask_op_t* op, *esp_avrc_psth_bit_mask_t* *psth, *esp_avrc_pt_cmd_t* cmd)

Operate on the type *esp_avrc_psth_bit_mask_t* with regard to a specific PASSTHROUGH command.

Parameters

- **op** –**[in]** operation requested on the bit mask field
- **psth** –**[in]** pointer to passthrough command bit mask structure
- **cmd** –**[in]** passthrough command code

Returns For operation ESP_AVRC_BIT_MASK_OP_SET or ESP_AVRC_BIT_MASK_OP_CLEAR, return true for a successful operation, other-

wise return false. For operation ESP_AVRC_BIT_MASK_OP_TEST, return true if the corresponding bit is set, otherwise false.

esp_err_t **esp_avrc_tg_get_rn_evt_cap**(*esp_avrc_rn_evt_cap_t* cap, *esp_avrc_rn_evt_cap_mask_t* *evt_set)

Get the requested event notification capabilies on local AVRC target. The capability is returned in a bit mask representation in evt_set. This function should be called after esp_avrc_tg_init().

For capability type "ESP_AVRC_RN_CAP_ALLOWED_EVT, the retrieved event set is constant and it covers all of the notifcation events that can possibly be supported with current implementation.

For capability type ESP_AVRC_RN_CAP_SUPPORTED_EVT, the event set covers the notification events selected to be supported under current configuration, The configuration can be changed using esp_avrc_tg_set_rn_evt_cap().

Returns

- ESP_OK: success
- ESP_ERR_INVALID_STATE: if bluetooth stack is not enabled or AVRC TG is not initialized
- ESP_ERR_INVALID_ARG: if cap is invalid or evt_set is NULL
- ESP_FAIL: otherwise

esp_err_t **esp_avrc_tg_set_rn_evt_cap**(const *esp_avrc_rn_evt_cap_mask_t* *evt_set)

Set the event notification capabilities on local AVRCP target. The capability is given in a bit mask representation in evt_set and must be a subset of allowed event IDs with current implementation. This function should be called after esp_avrc_tg_init().

Returns

- ESP_OK: success
- ESP_ERR_INVALID_STATE: if bluetooth stack is not enabled
- ESP_ERR_INVALID_ARG: if evt_set is NULL

bool **esp_avrc_rn_evt_bit_mask_operation**(*esp_avrc_bit_mask_op_t* op, *esp_avrc_rn_evt_cap_mask_t* *events, *esp_avrc_rn_event_ids_t* event_id)

Operate on the type *esp_avrc_rn_evt_cap_mask_t* with regard to a specific event.

For operation ESP_AVRC_BIT_MASK_OP_TEST, return true if the corresponding bit is set, otherwise false.

Parameters

- **op** –**[in]** operation requested on the bit mask field
- **events** –**[in]** pointer to event notification capability bit mask structure
- **event_id** –**[in]** notification event code

Returns For operation ESP_AVRC_BIT_MASK_OP_SET or ESP_AVRC_BIT_MASK_OP_CLEAR, return true for a successful operation, otherwise return false.

esp_err_t **esp_avrc_tg_send_rn_rsp**(*esp_avrc_rn_event_ids_t* event_id, *esp_avrc_rn_rsp_t* rsp, *esp_avrc_rn_param_t* *param)

Send RegisterNotification Response to remote AVRCP controller. Local event notification capability can be set using esp_avrc_tg_set_rn_evt_cap(), in a bit mask representation in evt_set. This function should be called after esp_avrc_tg_init().

Parameters

- **event_id** –**[in]** notification event ID that remote AVRCP CT registers
- **rsp** –**[in]** notification response code
- **param** –**[in]** parameters included in the specific notification

Returns

- ESP_OK: success
- ESP_ERR_INVALID_STATE: if bluetooth stack is not enabled or AVRC TG is not initialized

- ESP_ERR_INVALID_ARG: if evt_set is NULL

Unions

union **esp_avrc_rn_param_t**

#include <esp_avrc_api.h> AVRCP notification parameters.

Public Members

uint8_t **volume**

response data for ESP_AVRC_RN_VOLUME_CHANGE, ranges 0..127

esp_avrc_playback_stat_t **playback**

response data for ESP_AVRC_RN_PLAY_STATUS_CHANGE

uint8_t **elm_id**[8]

response data for ESP_AVRC_RN_TRACK_CHANGE

uint32_t **play_pos**

response data for ESP_AVRC_RN_PLAY_POS_CHANGED, in millisecond

esp_avrc_batt_stat_t **batt**

response data for ESP_AVRC_RN_BATTERY_STATUS_CHANGE

union **esp_avrc_ct_cb_param_t**

#include <esp_avrc_api.h> AVRC controller callback parameters.

Public Members

struct *esp_avrc_ct_cb_param_t*::*avrc_ct_conn_stat_param* **conn_stat**

AVRC connection status

struct *esp_avrc_ct_cb_param_t*::*avrc_ct_psth_rsp_param* **psth_rsp**

passthrough command response

struct *esp_avrc_ct_cb_param_t*::*avrc_ct_meta_rsp_param* **meta_rsp**

metadata attributes response

struct *esp_avrc_ct_cb_param_t*::*avrc_ct_change_notify_param* **change_ntf**

notifications

struct *esp_avrc_ct_cb_param_t*::*avrc_ct_rmt_feats_param* **rmt_feats**

AVRC features discovered from remote SDP server

struct *esp_avrc_ct_cb_param_t*::*avrc_ct_get_rn_caps_rsp_param* **get_rn_caps_rsp**

get supported event capabilities response from AVRCP target

struct *esp_avrc_ct_cb_param_t*::*avrc_ct_set_volume_rsp_param* **set_volume_rsp**

set absolute volume response event

struct **avrc_ct_change_notify_param**

#include <esp_avrc_api.h> ESP_AVRC_CT_CHANGE_NOTIFY_EVT.

Public Members

uint8_t **event_id**

id of AVRC event notification

esp_avrc_rn_param_t **event_parameter**

event notification parameter

struct **avrc_ct_conn_stat_param**

#include <esp_avrc_api.h> ESP_AVRC_CT_CONNECTION_STATE_EVT.

Public Members

bool **connected**

whether AVRC connection is set up

esp_bd_addr_t **remote_bda**

remote bluetooth device address

struct **avrc_ct_get_rn_caps_rsp_param**

#include <esp_avrc_api.h> ESP_AVRC_CT_GET_RN_CAPABILITIES_RSP_EVT.

Public Members

uint8_t **cap_count**

number of items provided in event or company_id according to cap_id used

esp_avrc_rn_evt_cap_mask_t **evt_set**

supported event_ids represented in bit-mask

struct **avrc_ct_meta_rsp_param**

#include <esp_avrc_api.h> ESP_AVRC_CT_METADATA_RSP_EVT.

Public Members

uint8_t **attr_id**

id of metadata attribute

uint8_t ***attr_text**

attribute itself

int **attr_length**

attribute character length

struct **avrc_ct_psth_rsp_param**

#include <esp_avrc_api.h> ESP_AVRC_CT_PASSTHROUGH_RSP_EVT.

Public Members

uint8_t **tl**

transaction label, 0 to 15

uint8_t **key_code**

passthrough command code

uint8_t **key_state**

0 for PRESSED, 1 for RELEASED

struct **avrc_ct_rmt_feats_param**

#include <esp_avrc_api.h> ESP_AVRC_CT_REMOTE_FEATURES_EVT.

Public Members

uint32_t **feat_mask**

AVRC feature mask of remote device

uint16_t **tg_feat_flag**

feature flag of remote device as TG

esp_bd_addr_t **remote_bda**

remote bluetooth device address

struct **avrc_ct_set_volume_rsp_param**

#include <esp_avrc_api.h> ESP_AVRC_CT_SET_ABSOLUTE_VOLUME_RSP_EVT.

Public Members

uint8_t **volume**

the volume which has actually been set, range is 0 to 0x7f, means 0% to 100%

union **esp_avrc_tg_cb_param_t**

#include <esp_avrc_api.h> AVRC target callback parameters.

Public Members

struct *esp_avrc_tg_cb_param_t*::*avrc_tg_conn_stat_param* **conn_stat**

AVRC connection status

struct *esp_avrc_tg_cb_param_t*::*avrc_tg_rmt_feats_param* **rmt_feats**

AVRC features discovered through SDP

struct *esp_avrc_tg_cb_param_t*::*avrc_tg_psth_cmd_param* **psth_cmd**

passthrough command

struct *esp_avrc_tg_cb_param_t*::*avrc_tg_set_abs_vol_param* **set_abs_vol**

set absolute volume command targeted on audio sink

struct *esp_avrc_tg_cb_param_t*::*avrc_tg_reg_ntf_param* **reg_ntf**

register notification

struct *esp_avrc_tg_cb_param_t*::*avrc_tg_set_app_value_param* **set_app_value**

set player application value

struct **avrc_tg_conn_stat_param**

#include <esp_avrc_api.h> ESP_AVRC_TG_CONNECTION_STATE_EVT.

Public Members

bool **connected**

whether AVRC connection is set up

esp_bd_addr_t **remote_bda**

remote bluetooth device address

struct **avrc_tg_psth_cmd_param**

#include <esp_avrc_api.h> ESP_AVRC_TG_PASSTHROUGH_CMD_EVT.

Public Members

uint8_t **key_code**

passthrough command code

uint8_t **key_state**

0 for PRESSED, 1 for RELEASED

struct **avrc_tg_reg_ntf_param**

#include <esp_avrc_api.h> ESP_AVRC_TG_REGISTER_NOTIFICATION_EVT.

Public Members

uint8_t **event_id**

event id of AVRC RegisterNotification

uint32_t **event_parameter**

event notification parameter

struct **avrc_tg_rmt_feats_param**

#include <esp_avrc_api.h> ESP_AVRC_TG_REMOTE_FEATURES_EVT.

Public Members

uint32_t **feat_mask**

AVRC feature mask of remote device

uint16_t **ct_feat_flag**

feature flag of remote device as CT

esp_bd_addr_t **remote_bda**

remote bluetooth device address

struct **avrc_tg_set_abs_vol_param**

#include <esp_avrc_api.h> ESP_AVRC_TG_SET_ABSOLUTE_VOLUME_CMD_EVT.

Public Members

uint8_t **volume**

volume ranges from 0 to 127

struct **avrc_tg_set_app_value_param**

#include <esp_avrc_api.h> ESP_AVRC_TG_SET_PLAYER_APP_VALUE_EVT.

Public Members

uint8_t **num_val**

attribute num

esp_avrc_set_app_value_param_t ***p_vals**

point to the id and value of player application attribute

Structures

struct **esp_avrc_psth_bit_mask_t**

AVRC passthrough command bit mask.

Public Members

uint16_t **bits**[8]

bit mask representation of PASSTHROUGH commands

struct **esp_avrc_rn_evt_cap_mask_t**

AVRC target notification event capability bit mask.

Public Members

uint16_t **bits**

bit mask representation of PASSTHROUGH commands

struct **esp_avrc_set_app_value_param_t**

AVRCP set app value parameters.

Public Members

uint8_t **attr_id**

player application attribute id

uint8_t **attr_val**

player application attribute value

Macros

ESP_AVRC_TRANS_LABEL_MAX

max transaction label

Type Definitions

typedef void (***esp_avrc_ct_cb_t**)(*esp_avrc_ct_cb_event_t* event, *esp_avrc_ct_cb_param_t* *param)

AVRCP controller callback function type.

Param event : Event type
Param param : Pointer to callback parameter union

typedef void (***esp_avrc_tg_cb_t**)(*esp_avrc_tg_cb_event_t* event, *esp_avrc_tg_cb_param_t* *param)

AVRCP target callback function type.

Param event : Event type
Param param : Pointer to callback parameter union

Enumerations

enum **esp_avrc_features_t**

AVRC feature bit mask.

Values:

enumerator **ESP_AVRC_FEAT_RCTG**

remote control target

enumerator **ESP_AVRC_FEAT_RCCT**

remote control controller

enumerator **ESP_AVRC_FEAT_VENDOR**

remote control vendor dependent commands

enumerator **ESP_AVRC_FEAT_BROWSE**

use browsing channel

enumerator **ESP_AVRC_FEAT_META_DATA**

remote control metadata transfer command/response

enumerator **ESP_AVRC_FEAT_ADV_CTRL**

remote control advanced control commmand/response

enum **esp_avrc_feature_flag_t**

AVRC supported features flag retrieved in SDP record.

Values:

enumerator **ESP_AVRC_FEAT_FLAG_CAT1**

category 1

enumerator **ESP_AVRC_FEAT_FLAG_CAT2**

category 2

enumerator **ESP_AVRC_FEAT_FLAG_CAT3**

category 3

enumerator **ESP_AVRC_FEAT_FLAG_CAT4**

category 4

enumerator **ESP_AVRC_FEAT_FLAG_BROWSING**

browsing

enumerator **ESP_AVRC_FEAT_FLAG_COVER_ART_GET_IMAGE_PROP**

Cover Art GetImageProperties

enumerator **ESP_AVRC_FEAT_FLAG_COVER_ART_GET_IMAGE**

Cover Art GetImage

enumerator **ESP_AVRC_FEAT_FLAG_COVER_ART_GET_LINKED_THUMBNAIL**

Cover Art GetLinkedThumbnail

enum **esp_avrc_pt_cmd_t**

AVRC passthrough command code.

Values:

enumerator **ESP_AVRC_PT_CMD_SELECT**

select

enumerator **ESP_AVRC_PT_CMD_UP**

up

enumerator **ESP_AVRC_PT_CMD_DOWN**

down

enumerator **ESP_AVRC_PT_CMD_LEFT**

left

enumerator **ESP_AVRC_PT_CMD_RIGHT**

right

enumerator **ESP_AVRC_PT_CMD_RIGHT_UP**

right-up

enumerator **ESP_AVRC_PT_CMD_RIGHT_DOWN**

right-down

enumerator **ESP_AVRC_PT_CMD_LEFT_UP**

left-up

enumerator **ESP_AVRC_PT_CMD_LEFT_DOWN**

left-down

enumerator **ESP_AVRC_PT_CMD_ROOT_MENU**

root menu

enumerator **ESP_AVRC_PT_CMD_SETUP_MENU**

setup menu

enumerator **ESP_AVRC_PT_CMD_CONT_MENU**

contents menu

enumerator **ESP_AVRC_PT_CMD_FAV_MENU**

favorite menu

enumerator **ESP_AVRC_PT_CMD_EXIT**

exit

enumerator **ESP_AVRC_PT_CMD_0**

0

enumerator **ESP_AVRC_PT_CMD_1**

1

enumerator **ESP_AVRC_PT_CMD_2**

2

enumerator **ESP_AVRC_PT_CMD_3**

3

enumerator **ESP_AVRC_PT_CMD_4**

4

enumerator **ESP_AVRC_PT_CMD_5**

5

enumerator **ESP_AVRC_PT_CMD_6**

6

enumerator **ESP_AVRC_PT_CMD_7**

7

enumerator **ESP_AVRC_PT_CMD_8**

8

enumerator **ESP_AVRC_PT_CMD_9**

9

enumerator **ESP_AVRC_PT_CMD_DOT**

dot

enumerator **ESP_AVRC_PT_CMD_ENTER**

enter

enumerator **ESP_AVRC_PT_CMD_CLEAR**

clear

enumerator **ESP_AVRC_PT_CMD_CHAN_UP**

channel up

enumerator **ESP_AVRC_PT_CMD_CHAN_DOWN**

channel down

enumerator **ESP_AVRC_PT_CMD_PREV_CHAN**

previous channel

enumerator **ESP_AVRC_PT_CMD_SOUND_SEL**

sound select

enumerator **ESP_AVRC_PT_CMD_INPUT_SEL**

input select

enumerator **ESP_AVRC_PT_CMD_DISP_INFO**

display information

enumerator **ESP_AVRC_PT_CMD_HELP**

help

enumerator **ESP_AVRC_PT_CMD_PAGE_UP**

page up

enumerator **ESP_AVRC_PT_CMD_PAGE_DOWN**

page down

enumerator **ESP_AVRC_PT_CMD_POWER**

power

enumerator **ESP_AVRC_PT_CMD_VOL_UP**

volume up

enumerator **ESP_AVRC_PT_CMD_VOL_DOWN**

volume down

enumerator **ESP_AVRC_PT_CMD_MUTE**

mute

enumerator **ESP_AVRC_PT_CMD_PLAY**

play

enumerator **ESP_AVRC_PT_CMD_STOP**

stop

enumerator **ESP_AVRC_PT_CMD_PAUSE**

pause

enumerator **ESP_AVRC_PT_CMD_RECORD**

record

enumerator **ESP_AVRC_PT_CMD_REWIND**

rewind

enumerator **ESP_AVRC_PT_CMD_FAST_FORWARD**

fast forward

enumerator **ESP_AVRC_PT_CMD_EJECT**

eject

enumerator **ESP_AVRC_PT_CMD_FORWARD**

forward

enumerator **ESP_AVRC_PT_CMD_BACKWARD**

backward

enumerator **ESP_AVRC_PT_CMD_ANGLE**

angle

enumerator **ESP_AVRC_PT_CMD_SUBPICT**

subpicture

enumerator **ESP_AVRC_PT_CMD_F1**

F1

enumerator **ESP_AVRC_PT_CMD_F2**

F2

enumerator **ESP_AVRC_PT_CMD_F3**

F3

enumerator **ESP_AVRC_PT_CMD_F4**

F4

enumerator **ESP_AVRC_PT_CMD_F5**

F5

enumerator **ESP_AVRC_PT_CMD_VENDOR**

vendor unique

enum **esp_avrc_psth_filter_t**

AVRC passthrough command filter.

Values:

enumerator **ESP_AVRC_PSTH_FILTER_ALLOWED_CMD**

all of the PASSTHROUGH commands that can possibly be used, immuateble

enumerator **ESP_AVRC_PSTH_FILTER_SUPPORTED_CMD**

PASSTHROUGH commands selectively supported according to the current configuration

enumerator **ESP_AVRC_PSTH_FILTER_SUPPORT_MAX**

enum **esp_avrc_bit_mask_op_t**

Values:

enumerator **ESP_AVRC_BIT_MASK_OP_TEST**

operation code to test a specific bit

enumerator **ESP_AVRC_BIT_MASK_OP_SET**

operation code to set a specific bit

enumerator **ESP_AVRC_BIT_MASK_OP_CLEAR**

operation code to clear a specific bit

enum **esp_avrc_pt_cmd_state_t**

AVRC passthrough command state.

Values:

enumerator **ESP_AVRC_PT_CMD_STATE_PRESSED**

key pressed

enumerator **ESP_AVRC_PT_CMD_STATE_RELEASED**

key released

enum **esp_avrc_ct_cb_event_t**

AVRC Controller callback events.

Values:

enumerator **ESP_AVRC_CT_CONNECTION_STATE_EVT**

connection state changed event

enumerator **ESP_AVRC_CT_PASSTHROUGH_RSP_EVT**

passthrough response event

enumerator **ESP_AVRC_CT_METADATA_RSP_EVT**

metadata response event

enumerator **ESP_AVRC_CT_PLAY_STATUS_RSP_EVT**

play status response event

enumerator **ESP_AVRC_CT_CHANGE_NOTIFY_EVT**

notification event

enumerator **ESP_AVRC_CT_REMOTE_FEATURES_EVT**

feature of remote device indication event

enumerator **ESP_AVRC_CT_GET_RN_CAPABILITIES_RSP_EVT**

supported notification events capability of peer device

enumerator **ESP_AVRC_CT_SET_ABSOLUTE_VOLUME_RSP_EVT**

set absolute volume response event

enum **esp_avrc_tg_cb_event_t**

AVRC Target callback events.

Values:

enumerator **ESP_AVRC_TG_CONNECTION_STATE_EVT**

connection state changed event

enumerator **ESP_AVRC_TG_REMOTE_FEATURES_EVT**

feature of remote device indication event

enumerator **ESP_AVRC_TG_PASSTHROUGH_CMD_EVT**

passthrough command event

enumerator **ESP_AVRC_TG_SET_ABSOLUTE_VOLUME_CMD_EVT**

set absolute volume command from remote device

enumerator **ESP_AVRC_TG_REGISTER_NOTIFICATION_EVT**

register notification event

enumerator **ESP_AVRC_TG_SET_PLAYER_APP_VALUE_EVT**

set applicaton attribute value, attribute refer to esp_avrc_ps_attr_ids_t

enum **esp_avrc_md_attr_mask_t**

AVRC metadata attribute mask.

Values:

enumerator **ESP_AVRC_MD_ATTR_TITLE**

title of the playing track

enumerator **ESP_AVRC_MD_ATTR_ARTIST**

track artist

enumerator **ESP_AVRC_MD_ATTR_ALBUM**

album name

enumerator **ESP_AVRC_MD_ATTR_TRACK_NUM**

track position on the album

enumerator **ESP_AVRC_MD_ATTR_NUM_TRACKS**

number of tracks on the album

enumerator **ESP_AVRC_MD_ATTR_GENRE**

track genre

enumerator **ESP_AVRC_MD_ATTR_PLAYING_TIME**

total album playing time in miliseconds

enum **esp_avrc_rn_event_ids_t**

AVRC event notification ids.

Values:

enumerator **ESP_AVRC_RN_PLAY_STATUS_CHANGE**

track status change, eg. from playing to paused

enumerator **ESP_AVRC_RN_TRACK_CHANGE**

new track is loaded

enumerator **ESP_AVRC_RN_TRACK_REACHED_END**

current track reached end

enumerator **ESP_AVRC_RN_TRACK_REACHED_START**
current track reached start position

enumerator **ESP_AVRC_RN_PLAY_POS_CHANGED**
track playing position changed

enumerator **ESP_AVRC_RN_BATTERY_STATUS_CHANGE**
battery status changed

enumerator **ESP_AVRC_RN_SYSTEM_STATUS_CHANGE**
system status changed

enumerator **ESP_AVRC_RN_APP_SETTING_CHANGE**
application settings changed

enumerator **ESP_AVRC_RN_NOW_PLAYING_CHANGE**
now playing content changed

enumerator **ESP_AVRC_RN_AVAILABLE_PLAYERS_CHANGE**
available players changed

enumerator **ESP_AVRC_RN_ADDRESSED_PLAYER_CHANGE**
the addressed player changed

enumerator **ESP_AVRC_RN_UIDS_CHANGE**
UIDs changed

enumerator **ESP_AVRC_RN_VOLUME_CHANGE**
volume changed locally on TG

enumerator **ESP_AVRC_RN_MAX_EVT**

enum **esp_avrc_rn_evt_cap_t**
AVRC target notification event notification capability.
Values:

enumerator **ESP_AVRC_RN_CAP_ALLOWED_EVT**
all of the notification events that can possibly be supported, immutable

enumerator **ESP_AVRC_RN_CAP_SUPPORTED_EVT**
notification events selectively supported according to the current configuration

enumerator **ESP_AVRC_RN_CAP_MAX**

enum **esp_avrc_rn_rsp_t**
AVRC notification response type.
Values:

enumerator **ESP_AVRC_RN_RSP_INTERIM**

initial response to RegisterNotification, should be sent T_mtp(1000ms) from receiving the command

enumerator **ESP_AVRC_RN_RSP_CHANGED**

final response to RegisterNotification command

enum **esp_avrc_ps_attr_ids_t**

AVRC player setting ids.

Values:

enumerator **ESP_AVRC_PS_EQUALIZER**

equalizer, on or off

enumerator **ESP_AVRC_PS_REPEAT_MODE**

repeat mode

enumerator **ESP_AVRC_PS_SHUFFLE_MODE**

shuffle mode

enumerator **ESP_AVRC_PS_SCAN_MODE**

scan mode on or off

enumerator **ESP_AVRC_PS_MAX_ATTR**

enum **esp_avrc_ps_eq_value_ids_t**

AVRC equalizer modes.

Values:

enumerator **ESP_AVRC_PS_EQUALIZER_OFF**

equalizer OFF

enumerator **ESP_AVRC_PS_EQUALIZER_ON**

equalizer ON

enum **esp_avrc_ps_rpt_value_ids_t**

AVRC repeat modes.

Values:

enumerator **ESP_AVRC_PS_REPEAT_OFF**

repeat mode off

enumerator **ESP_AVRC_PS_REPEAT_SINGLE**

single track repeat

enumerator **ESP_AVRC_PS_REPEAT_GROUP**

group repeat

enum **esp_avrc_ps_shf_value_ids_t**

AVRC shuffle modes.

Values:

enumerator **ESP_AVRC_PS_SHUFFLE_OFF**

enumerator **ESP_AVRC_PS_SHUFFLE_ALL**

enumerator **ESP_AVRC_PS_SHUFFLE_GROUP**

enum **esp_avrc_ps_scn_value_ids_t**

AVRC scan modes.

Values:

enumerator **ESP_AVRC_PS_SCAN_OFF**

scan off

enumerator **ESP_AVRC_PS_SCAN_ALL**

all tracks scan

enumerator **ESP_AVRC_PS_SCAN_GROUP**

group scan

enum **esp_avrc_rsp_t**

AVCTP response codes.

Values:

enumerator **ESP_AVRC_RSP_NOT_IMPL**

not implemented

enumerator **ESP_AVRC_RSP_ACCEPT**

accept

enumerator **ESP_AVRC_RSP_REJECT**

reject

enumerator **ESP_AVRC_RSP_IN_TRANS**

in transition

enumerator **ESP_AVRC_RSP_IMPL_STBL**

implemented/stable

enumerator **ESP_AVRC_RSP_CHANGED**

changed

enumerator **ESP_AVRC_RSP_INTERIM**

interim

enum **esp_avrc_batt_stat_t**

AVRCP battery status.

Values:

enumerator **ESP_AVRC_BATT_NORMAL**

normal state

enumerator **ESP_AVRC_BATT_WARNING**

unable to operate soon

enumerator **ESP_AVRC_BATT_CRITICAL**

cannot operate any more

enumerator **ESP_AVRC_BATT_EXTERNAL**

plugged to external power supply

enumerator **ESP_AVRC_BATT_FULL_CHARGE**

when completely charged from external power supply

enum **esp_avrc_playback_stat_t**

AVRCP current status of playback.

Values:

enumerator **ESP_AVRC_PLAYBACK_STOPPED**

stopped

enumerator **ESP_AVRC_PLAYBACK_PLAYING**

playing

enumerator **ESP_AVRC_PLAYBACK_PAUSED**

paused

enumerator **ESP_AVRC_PLAYBACK_FWD_SEEK**

forward seek

enumerator **ESP_AVRC_PLAYBACK_REV_SEEK**

reverse seek

enumerator **ESP_AVRC_PLAYBACK_ERROR**

error

SPP API

Application Example Check bluetooth/bluedroid/classic_bt folder in ESP-IDF examples, which contains the following application:

- This is a SPP demo. This demo can discover the service, connect, send and recive SPP data bluetooth/bluedroid/classic_bt/bt_spp_acceptor, bluetooth/bluedroid/classic_bt/bt_spp_initiator

API Reference

Header File

- components/bt/host/bluedroid/api/include/api/esp_spp_api.h

Functions

esp_err_t **esp_spp_register_callback** (*esp_spp_cb_t* callback)

This function is called to init callbacks with SPP module.

Parameters **callback** –**[in]** pointer to the init callback function.

Returns

- ESP_OK: success
- other: failed

esp_err_t **esp_spp_init** (*esp_spp_mode_t* mode)

This function is called to init SPP module. When the operation is completed, the callback function will be called with ESP_SPP_INIT_EVT. This function should be called after esp_bluedroid_enable() completes successfully.

Parameters **mode** –**[in]** Choose the mode of SPP, ESP_SPP_MODE_CB or ESP_SPP_MODE_VFS.

Returns

- ESP_OK: success
- other: failed

esp_err_t **esp_spp_deinit** (void)

This function is called to uninit SPP module. The operation will close all active SPP connection first, then the callback function will be called with ESP_SPP_CLOSE_EVT, and the number of ESP_SPP_CLOSE_EVT is equal to the number of connection. When the operation is completed, the callback function will be called with ESP_SPP_UNINIT_EVT. This function should be called after esp_spp_init() completes successfully.

Returns

- ESP_OK: success
- other: failed

esp_err_t **esp_spp_start_discovery** (*esp_bd_addr_t* bd_addr)

This function is called to performs service discovery for the services provided by the given peer device. When the operation is completed, the callback function will be called with ESP_SPP_DISCOVERY_COMP_EVT. This funciton must be called after esp_spp_init() successful and before esp_spp_deinit().

Parameters **bd_addr** –**[in]** Remote device bluetooth device address.

Returns

- ESP_OK: success
- other: failed

esp_err_t **esp_spp_connect** (*esp_spp_sec_t* sec_mask, *esp_spp_role_t* role, uint8_t remote_scn, *esp_bd_addr_t* peer_bd_addr)

This function makes an SPP connection to a remote BD Address. When the connection is initiated or failed to initiate, the callback is called with ESP_SPP_CL_INIT_EVT. When the connection is established or failed, the callback is called with ESP_SPP_OPEN_EVT. This funciton must be called after esp_spp_init() successful and before esp_spp_deinit().

Parameters

- **sec_mask** –**[in]** Security Setting Mask. Suggest to use ESP_SPP_SEC_NONE, ESP_SPP_SEC_AUTHORIZE or ESP_SPP_SEC_AUTHENTICATE only.
- **role** –**[in]** Master or slave.
- **remote_scn** –**[in]** Remote device bluetooth device SCN.
- **peer_bd_addr** –**[in]** Remote device bluetooth device address.

Returns

- ESP_OK: success

- other: failed

esp_err_t **esp_spp_disconnect**(uint32_t handle)

This function closes an SPP connection. When the operation is completed, the callback function will be called with ESP_SPP_CLOSE_EVT. This funciton must be called after esp_spp_init() successful and before esp_spp_deinit().

Parameters **handle** –**[in]** The connection handle.

Returns

- ESP_OK: success
- other: failed

esp_err_t **esp_spp_start_srv**(*esp_spp_sec_t* sec_mask, *esp_spp_role_t* role, uint8_t local_scn, const char *name)

This function create a SPP server and starts listening for an SPP connection request from a remote Bluetooth device. When the server is started successfully, the callback is called with ESP_SPP_START_EVT. When the connection is established, the callback is called with ESP_SPP_SRV_OPEN_EVT. This funciton must be called after esp_spp_init() successful and before esp_spp_deinit().

Parameters

- **sec_mask** –**[in]** Security Setting Mask. Suggest to use ESP_SPP_SEC_NONE, ESP_SPP_SEC_AUTHORIZE or ESP_SPP_SEC_AUTHENTICATE only.
- **role** –**[in]** Master or slave.
- **local_scn** –**[in]** The specific channel you want to get. If channel is 0, means get any channel.
- **name** –**[in]** Server’ s name.

Returns

- ESP_OK: success
- other: failed

esp_err_t **esp_spp_stop_srv**(void)

This function stops all SPP servers. The operation will close all active SPP connection first, then the callback function will be called with ESP_SPP_CLOSE_EVT, and the number of ESP_SPP_CLOSE_EVT is equal to the number of connection. When the operation is completed, the callback is called with ESP_SPP_SRV_STOP_EVT. This funciton must be called after esp_spp_init() successful and before esp_spp_deinit().

Returns

- ESP_OK: success
- other: failed

esp_err_t **esp_spp_stop_srv_scn**(uint8_t scn)

This function stops a specific SPP server. The operation will close all active SPP connection first on the specific SPP server, then the callback function will be called with ESP_SPP_CLOSE_EVT, and the number of ESP_SPP_CLOSE_EVT is equal to the number of connection. When the operation is completed, the callback is called with ESP_SPP_SRV_STOP_EVT. This funciton must be called after esp_spp_init() successful and before esp_spp_deinit().

Parameters **scn** –**[in]** Server channel number.

Returns

- ESP_OK: success
- other: failed

esp_err_t **esp_spp_write**(uint32_t handle, int len, uint8_t *p_data)

This function is used to write data, only for ESP_SPP_MODE_CB. When this function need to be called repeatedly, it is strongly recommended to call this function again after the previous event ESP_SPP_WRITE_EVT is received and the parameter ‘cong’ is equal to false. If the previous event ESP_SPP_WRITE_EVT with parameter ‘cong’ is equal to true, the function can only be called again when the event ESP_SPP_CONG_EVT with parameter ‘cong’ equal to false is received. This funciton must be called after an connection between initiator and acceptor has been established.

Parameters

- **handle** –**[in]** The connection handle.
- **len** –**[in]** The length of the data written.
- **p_data** –**[in]** The data written.

Returns

- ESP_OK: success
- other: failed

esp_err_t **esp_spp_vfs_register**(void)

This function is used to register VFS. For now, SPP only supports write, read and close.

Returns

- ESP_OK: success
- other: failed

Unions

union **esp_spp_cb_param_t**

#include <esp_spp_api.h> SPP callback parameters union.

Public Members

struct *esp_spp_cb_param_t*::*spp_init_evt_param* **init**

SPP callback param of SPP_INIT_EVT

struct *esp_spp_cb_param_t*::*spp_uninit_evt_param* **uninit**

SPP callback param of SPP_UNINIT_EVT

struct *esp_spp_cb_param_t*::*spp_discovery_comp_evt_param* **disc_comp**

SPP callback param of SPP_DISCOVERY_COMP_EVT

struct *esp_spp_cb_param_t*::*spp_open_evt_param* **open**

SPP callback param of ESP_SPP_OPEN_EVT

struct *esp_spp_cb_param_t*::*spp_srv_open_evt_param* **srv_open**

SPP callback param of ESP_SPP_SRV_OPEN_EVT

struct *esp_spp_cb_param_t*::*spp_close_evt_param* **close**

SPP callback param of ESP_SPP_CLOSE_EVT

struct *esp_spp_cb_param_t*::*spp_start_evt_param* **start**

SPP callback param of ESP_SPP_START_EVT

struct *esp_spp_cb_param_t*::*spp_srv_stop_evt_param* **srv_stop**

SPP callback param of ESP_SPP_SRV_STOP_EVT

struct *esp_spp_cb_param_t*::*spp_cl_init_evt_param* **cl_init**

SPP callback param of ESP_SPP_CL_INIT_EVT

struct *esp_spp_cb_param_t*::*spp_write_evt_param* **write**

SPP callback param of ESP_SPP_WRITE_EVT

struct *esp_spp_cb_param_t*::*spp_data_ind_evt_param* **data_ind**

SPP callback param of ESP_SPP_DATA_IND_EVT

struct *esp_spp_cb_param_t*::*spp_cong_evt_param* **cong**

SPP callback param of ESP_SPP_CONG_EVT

struct **spp_cl_init_evt_param**

#include <esp_spp_api.h> ESP_SPP_CL_INIT_EVT.

Public Members

esp_spp_status_t **status**

status

uint32_t **handle**

The connection handle

uint8_t **sec_id**

security ID used by this server

bool **use_co**

TRUE to use co_rfc_data

struct **spp_close_evt_param**

#include <esp_spp_api.h> ESP_SPP_CLOSE_EVT.

Public Members

esp_spp_status_t **status**

status

uint32_t **port_status**

PORT status

uint32_t **handle**

The connection handle

bool **async**

FALSE, if local initiates disconnect

struct **spp_cong_evt_param**

#include <esp_spp_api.h> ESP_SPP_CONG_EVT.

Public Members

esp_spp_status_t **status**

status

uint32_t **handle**

The connection handle

bool **cong**

TRUE, congested. FALSE, uncongested

struct **spp_data_ind_evt_param**

#include <esp_spp_api.h> ESP_SPP_DATA_IND_EVT.

Public Members

esp_spp_status_t **status**

status

uint32_t **handle**

The connection handle

uint16_t **len**

The length of data

uint8_t ***data**

The data received

struct **spp_discovery_comp_evt_param**

#include <esp_spp_api.h> SPP_DISCOVERY_COMP_EVT.

Public Members

esp_spp_status_t **status**

status

uint8_t **scn_num**

The num of scn_num

uint8_t **scn**[31]

channel #

const char ***service_name**[31]

service_name

struct **spp_init_evt_param**

#include <esp_spp_api.h> SPP_INIT_EVT.

Public Members

esp_spp_status_t **status**

status

struct **spp_open_evt_param**

#include <esp_spp_api.h> ESP_SPP_OPEN_EVT.

Public Members

esp_spp_status_t **status**

status

uint32_t **handle**

The connection handle

int **fd**

The file descriptor only for ESP_SPP_MODE_VFS

esp_bd_addr_t **rem_bda**

The peer address

struct **spp_srv_open_evt_param**

#include <esp_spp_api.h> ESP_SPP_SRV_OPEN_EVT.

Public Members

esp_spp_status_t **status**

status

uint32_t **handle**

The connection handle

uint32_t **new_listen_handle**

The new listen handle

int **fd**

The file descriptor only for ESP_SPP_MODE_VFS

esp_bd_addr_t **rem_bda**

The peer address

struct **spp_srv_stop_evt_param**

#include <esp_spp_api.h> ESP_SPP_SRV_STOP_EVT.

Public Members

esp_spp_status_t **status**

status

uint8_t **scn**

Server channel number

struct **spp_start_evt_param**

#include <esp_spp_api.h> ESP_SPP_START_EVT.

Public Members

esp_spp_status_t **status**

status

uint32_t **handle**

The connection handle

uint8_t **sec_id**

security ID used by this server

uint8_t **scn**

Server channel number

bool **use_co**

TRUE to use co_rfc_data

struct **spp_uninit_evt_param**

#include <esp_spp_api.h> SPP_UNINIT_EVT.

Public Members

esp_spp_status_t **status**

status

struct **spp_write_evt_param**

#include <esp_spp_api.h> ESP_SPP_WRITE_EVT.

Public Members

esp_spp_status_t **status**

status

uint32_t **handle**

The connection handle

int **len**

The length of the data written.

bool **cong**

congestion status

Macros

ESP_SPP_SEC_NONE

No security. relate to BTA_SEC_NONE in bta/bta_api.h

ESP_SPP_SEC_AUTHORIZE

Authorization required (only needed for out going connection) relate to BTA_SEC_AUTHORIZE in bta/bta_api.h

ESP_SPP_SEC_AUTHENTICATE

Authentication required. relate to BTA_SEC_AUTHENTICATE in bta/bta_api.h

ESP_SPP_SEC_ENCRYPT

Encryption required. relate to BTA_SEC_ENCRYPT in bta/bta_api.h

ESP_SPP_SEC_MODE4_LEVEL4

Mode 4 level 4 service, i.e. incoming/outgoing MITM and P-256 encryption relate to BTA_SEC_MODE4_LEVEL4 in bta/bta_api.h

ESP_SPP_SEC_MITM

Man-In-The_Middle protection relate to BTA_SEC_MITM in bta/bta_api.h

ESP_SPP_SEC_IN_16_DIGITS

Min 16 digit for pin code relate to BTA_SEC_IN_16_DIGITS in bta/bta_api.h

ESP_SPP_MAX_MTU

SPP max MTU

ESP_SPP_MAX_SCN

SPP max SCN

Type Definitions

typedef uint16_t **esp_spp_sec_t**

typedef void (***esp_spp_cb_t**)(*esp_spp_cb_event_t* event, *esp_spp_cb_param_t* *param)

SPP callback function type. When handle ESP_SPP_DATA_IND_EVT, it is strongly recommended to cache incoming data, and process them in other lower priority application task rather than in this callback directly.

Param event Event type
Param param Point to callback parameter, currently is union type

Enumerations

enum **esp_spp_status_t**

Values:

enumerator **ESP_SPP_SUCCESS**

Successful operation.

enumerator **ESP_SPP_FAILURE**

Generic failure.

enumerator **ESP_SPP_BUSY**

Temporarily can not handle this request.

enumerator **ESP_SPP_NO_DATA**

No data

enumerator **ESP_SPP_NO_RESOURCE**

No more resource

enumerator **ESP_SPP_NEED_INIT**

SPP module shall init first

enumerator **ESP_SPP_NEED_DEINIT**

SPP module shall deinit first

enumerator **ESP_SPP_NO_CONNECTION**

Connection may have been closed

enumerator **ESP_SPP_NO_SERVER**

No SPP server

enum **esp_spp_role_t**

Values:

enumerator **ESP_SPP_ROLE_MASTER**

Role: master

enumerator **ESP_SPP_ROLE_SLAVE**

Role: slave

enum **esp_spp_mode_t**

Values:

enumerator **ESP_SPP_MODE_CB**

When data is coming, a callback will come with data

enumerator **ESP_SPP_MODE_VFS**

Use VFS to write/read data

enum **esp_spp_cb_event_t**

SPP callback function events.

Values:

enumerator **ESP_SPP_INIT_EVT**

When SPP is inited, the event comes

enumerator **ESP_SPP_UNINIT_EVT**

When SPP is uninited, the event comes

enumerator **ESP_SPP_DISCOVERY_COMP_EVT**

When SDP discovery complete, the event comes

enumerator **ESP_SPP_OPEN_EVT**

When SPP Client connection open, the event comes

enumerator **ESP_SPP_CLOSE_EVT**

When SPP connection closed, the event comes

enumerator **ESP_SPP_START_EVT**

When SPP server started, the event comes

enumerator **ESP_SPP_CL_INIT_EVT**

When SPP client initiated a connection, the event comes

enumerator **ESP_SPP_DATA_IND_EVT**

When SPP connection received data, the event comes, only for ESP_SPP_MODE_CB

enumerator **ESP_SPP_CONG_EVT**

When SPP connection congestion status changed, the event comes, only for ESP_SPP_MODE_CB

enumerator **ESP_SPP_WRITE_EVT**

When SPP write operation completes, the event comes, only for ESP_SPP_MODE_CB

enumerator **ESP_SPP_SRV_OPEN_EVT**

When SPP Server connection open, the event comes

enumerator **ESP_SPP_SRV_STOP_EVT**

When SPP server stopped, the event comes

HFP DEFINES

API Reference

Header File

- components/bt/host/bluedroid/api/include/api/esp_hf_defs.h

Macros

ESP_BT_HF_NUMBER_LEN

ESP_BT_HF_OPERATOR_NAME_LEN

BTC_HSAG_SERVICE_NAME

BTC_HFAG_SERVICE_NAME

BTC_HF_SERVICES

BTC_HF_SERVICE_NAMES

BTC_HF_SECURITY

BTC_HF_CALL_END_TIMEOUT

BTC_HF_INVALID_IDX

Type Definitions

typedef void (***esp_hf_connection_state_callback**)(*esp_hf_connection_state_t* state, *esp_bd_addr_t* *bd_addr)

Callback for connection state change. state will have one of the values from BtHfConnectionState

typedef void (***esp_hf_audio_state_callback**)(*esp_hf_audio_state_t* state, *esp_bd_addr_t* *bd_addr)

Callback for audio connection state change. state will have one of the values from BtHfAudioState

typedef void (***esp_hf_vr_cmd_callback**)(*esp_hf_vr_state_t* state, *esp_bd_addr_t* *bd_addr)

Callback for VR connection state change. state will have one of the values from BtHfVRState

typedef void (***esp_hf_answer_call_cmd_callback**)(*esp_bd_addr_t* *bd_addr)

Callback for answer incoming call (ATA)

typedef void (***esp_hf_hangup_call_cmd_callback**)(*esp_bd_addr_t* *bd_addr)

Callback for disconnect call (AT+CHUP)

typedef void (***esp_hf_volume_cmd_callback**)(*esp_hf_volume_control_target_t* type, int volume, *esp_bd_addr_t* *bd_addr)

Callback for disconnect call (AT+CHUP) type will denote Speaker/Mic gain (BtHfVolumeControl).

typedef void (***esp_hf_dial_call_cmd_callback**)(char *number, *esp_bd_addr_t* *bd_addr)

Callback for dialing an outgoing call If number is NULL, redial

typedef void (***esp_hf_dtmf_cmd_callback**)(char tone, *esp_bd_addr_t* *bd_addr)

Callback for sending DTMF tones tone contains the dtmf character to be sent

typedef void (***esp_hf_nrec_cmd_callback**)(*esp_hf_nrec_t* nrec, *esp_bd_addr_t* *bd_addr)

Callback for enabling/disabling noise reduction/echo cancellation value will be 1 to enable, 0 to disable

typedef void (*`esp_hf_wbs_callback`)(*esp_hf_wbs_config_t* wbs, *esp_bd_addr_t* *bd_addr)

Callback for AT+BCS and event from BAC WBS enable, WBS disable

typedef void (*`esp_hf_chld_cmd_callback`)(*esp_hf_chld_type_t* chld, *esp_bd_addr_t* *bd_addr)

Callback for call hold handling (AT+CHLD) value will contain the call hold command (0, 1, 2, 3)

typedef void (*`esp_hf_cnum_cmd_callback`)(*esp_bd_addr_t* *bd_addr)

Callback for CNUM (subscriber number)

typedef void (*`esp_hf_cind_cmd_callback`)(*esp_bd_addr_t* *bd_addr)

Callback for indicators (CIND)

typedef void (*`esp_hf_cops_cmd_callback`)(*esp_bd_addr_t* *bd_addr)

Callback for operator selection (COPS)

typedef void (*`esp_hf_clcc_cmd_callback`)(*esp_bd_addr_t* *bd_addr)

Callback for call list (AT+CLCC)

typedef void (*`esp_hf_unknown_at_cmd_callback`)(char *at_string, *esp_bd_addr_t* *bd_addr)

Callback for unknown AT command recd from AG at_string will contain the unparsed AT string

typedef void (*`esp_hf_key_pressed_cmd_callback`)(*esp_bd_addr_t* *bd_addr)

Callback for keypressed (HSP) event.

Enumerations

enum `esp_hf_in_band_ring_state_t`

in-band ring tone state

Values:

enumerator `ESP_HF_IN_BAND_RINGTONE_NOT_PROVIDED`

enumerator `ESP_HF_IN_BAND_RINGTONE_PROVIDED`

enum `esp_hf_vr_state_t`

voice recognition state

Values:

enumerator `ESP_HF_VR_STATE_DISABLED`

voice recognition disabled

enumerator `ESP_HF_VR_STATE_ENABLED`

voice recognition enabled

enum `esp_hf_volume_control_target_t`

Bluetooth HFP audio volume control target.

Values:

enumerator **ESP_HF_VOLUME_CONTROL_TARGET_SPK**

speaker

enumerator **ESP_HF_VOLUME_CONTROL_TARGET_MIC**

microphone

enum **esp_hf_audio_state_t**

Bluetooth HFP audio connection status.

Values:

enumerator **ESP_HF_AUDIO_STATE_DISCONNECTED**

audio connection released

enumerator **ESP_HF_AUDIO_STATE_CONNECTING**

audio connection has been initiated

enumerator **ESP_HF_AUDIO_STATE_CONNECTED**

audio connection is established

enumerator **ESP_HF_AUDIO_STATE_CONNECTED_MSBC**

mSBC audio connection is established

enum **esp_hf_volume_type_t**

Values:

enumerator **ESP_HF_VOLUME_TYPE_SPK**

enumerator **ESP_HF_VOLUME_TYPE_MIC**

enum **esp_hf_network_state_t**

+CIND network service availability status

Values:

enumerator **ESP_HF_NETWORK_STATE_NOT_AVAILABLE**

enumerator **ESP_HF_NETWORK_STATE_AVAILABLE**

enum **esp_hf_service_type_t**

+CIEV Service type

Values:

enumerator **ESP_HF_SERVICE_TYPE_HOME**

enumerator **ESP_HF_SERVICE_TYPE_ROAMING**

enum **esp_hf_call_status_t**

+CIND call status indicator values

Values:

enumerator **ESP_HF_CALL_STATUS_NO_CALLS**

no call in progress

enumerator **ESP_HF_CALL_STATUS_CALL_IN_PROGRESS**

call is present(active or held)

enum **esp_hf_call_setup_status_t**

+CIND call setup status indicator values

Values:

enumerator **ESP_HF_CALL_SETUP_STATUS_IDLE**

no call setup in progress

enumerator **ESP_HF_CALL_SETUP_STATUS_INCOMING**

incoming call setup in progress

enumerator **ESP_HF_CALL_SETUP_STATUS_OUTGOING_DIALING**

outgoing call setup in dialing state

enumerator **ESP_HF_CALL_SETUP_STATUS_OUTGOING_ALERTING**

outgoing call setup in alerting state

enum **esp_hf_roaming_status_t**

+CIND roaming status indicator values

Values:

enumerator **ESP_HF_ROAMING_STATUS_INACTIVE**

roaming is not active

enumerator **ESP_HF_ROAMING_STATUS_ACTIVE**

a roaming is active

enum **esp_hf_call_held_status_t**

+CIND call held indicator values

Values:

enumerator **ESP_HF_CALL_HELD_STATUS_NONE**

no calls held

enumerator **ESP_HF_CALL_HELD_STATUS_HELD_AND_ACTIVE**

both active and held call

enumerator **ESP_HF_CALL_HELD_STATUS_HELD**

call on hold, no active call

enum **esp_hf_current_call_status_t**

+CLCC status of the call

Values:

enumerator **ESP_HF_CURRENT_CALL_STATUS_ACTIVE**

active

enumerator **ESP_HF_CURRENT_CALL_STATUS_HELD**

held

enumerator **ESP_HF_CURRENT_CALL_STATUS_DIALING**

dialing (outgoing calls only)

enumerator **ESP_HF_CURRENT_CALL_STATUS_ALERTING**

alerting (outgoing calls only)

enumerator **ESP_HF_CURRENT_CALL_STATUS_INCOMING**

incoming (incoming calls only)

enumerator **ESP_HF_CURRENT_CALL_STATUS_WAITING**

waiting (incoming calls only)

enumerator **ESP_HF_CURRENT_CALL_STATUS_HELD_BY_RESP_HOLD**

call held by response and hold

enum **esp_hf_current_call_direction_t**

+CLCC direction of the call

Values:

enumerator **ESP_HF_CURRENT_CALL_DIRECTION_OUTGOING**

outgoing

enumerator **ESP_HF_CURRENT_CALL_DIRECTION_INCOMING**

incoming

enum **esp_hf_current_call_mpty_type_t**

+CLCC multi-party call flag

Values:

enumerator **ESP_HF_CURRENT_CALL_MPTY_TYPE_SINGLE**

not a member of a multi-party call

enumerator **ESP_HF_CURRENT_CALL_MPTY_TYPE_MULTI**

member of a multi-party call

enum **esp_hf_current_call_mode_t**

+CLCC call mode

Values:

enumerator **ESP_HF_CURRENT_CALL_MODE_VOICE**

enumerator **ESP_HF_CURRENT_CALL_MODE_DATA**

enumerator **ESP_HF_CURRENT_CALL_MODE_FAX**

enum **esp_hf_call_addr_type_t**

+CLCC address type

Values:

enumerator **ESP_HF_CALL_ADDR_TYPE_UNKNOWN**

unkown address type

enumerator **ESP_HF_CALL_ADDR_TYPE_INTERNATIONAL**

international address

enum **esp_hf_subscriber_service_type_t**

+CNUM service type of the phone number

Values:

enumerator **ESP_HF_SUBSCRIBER_SERVICE_TYPE_UNKNOWN**

unknown

enumerator **ESP_HF_SUBSCRIBER_SERVICE_TYPE_VOICE**

voice service

enumerator **ESP_HF_SUBSCRIBER_SERVICE_TYPE_FAX**

fax service

enum **esp_hf_btrh_status_t**

+BTRH response and hold result code

Values:

enumerator **ESP_HF_BTRH_STATUS_HELD**

incoming call is put on held in AG

enumerator **ESP_HF_BTRH_STATUS_ACCEPTED**

held incoming call is accepted in AG

enumerator **ESP_HF_BTRH_STATUS_REJECTED**

held incoming call is rejected in AG

enum **esp_hf_btrh_cmd_t**

AT+BTRH response and hold action code.

Values:

enumerator **ESP_HF_BTRH_CMD_HOLD**

put the incoming call on hold

enumerator **ESP_HF_BTRH_CMD_ACCEPT**

accept a held incoming call

enumerator **ESP_HF_BTRH_CMD_REJECT**

reject a held incoming call

enum **esp_hf_nrec_t**

Values:

enumerator **ESP_HF_NREC_STOP**

enumerator **ESP_HF_NREC_START**

enum **esp_hf_call_waiting_status_t**

+CCWA resposne status

Values:

enumerator **ESP_HF_CALL_WAITING_INACTIVE**

enumerator **ESP_HF_CALL_WAITING_ACTIVE**

enum **esp_hf_wbs_config_t**

Values:

enumerator **ESP_HF_WBS_NONE**

enumerator **ESP_HF_WBS_NO**

enumerator **ESP_HF_WBS_YES**

enum **esp_hf_connection_state_t**

Bluetooth HFP RFCOMM connection and service level connection status.

Values:

enumerator **ESP_HF_CONNECTION_STATE_DISCONNECTED**

RFCOMM data link channel released

enumerator **ESP_HF_CONNECTION_STATE_CONNECTING**

connecting remote device on the RFCOMM data link

enumerator **ESP_HF_CONNECTION_STATE_CONNECTED**

RFCOMM connection established

enumerator **ESP_HF_CONNECTION_STATE_SLC_CONNECTED**

service level connection established

enumerator **ESP_HF_CONNECTION_STATE_DISCONNECTING**

disconnecting with remote device on the RFCOMM data link

enum **esp_hf_chld_type_t**

AT+CHLD command values.

Values:

enumerator **ESP_HF_CHLD_TYPE_REL**

<0>, Terminate all held or set UDUB(“busy”) to a waiting call

enumerator **ESP_HF_CHLD_TYPE_REL_ACC**

<1>, Terminate all active calls and accepts a waiting/held call

enumerator **ESP_HF_CHLD_TYPE_HOLD_ACC**

<2>, Hold all active calls and accepts a waiting/held call

enumerator **ESP_HF_CHLD_TYPE_MERGE**

<3>, Add all held calls to a conference

enumerator **ESP_HF_CHLD_TYPE_MERGE_DETACH**

<4>, connect the two calls and disconnects the subscriber from both calls

enumerator **ESP_HF_CHLD_TYPE_REL_X**

<1x>, releases specified calls only

enumerator **ESP_HF_CHLD_TYPE_PRIV_X**

<2x>, request private consultation mode with specified call

enum **esp_hf_at_response_code_t**

Values:

enumerator **ESP_HF_AT_RESPONSE_CODE_OK**

acknowledges execution of a command line

enumerator **ESP_HF_AT_RESPONSE_CODE_ERR**

command not accepted

enumerator **ESP_HF_AT_RESPONSE_CODE_NO_CARRIER**

connection terminated

enumerator **ESP_HF_AT_RESPONSE_CODE_BUSY**

busy signal detected

enumerator **ESP_HF_AT_RESPONSE_CODE_NO_ANSWER**

connection completion timeout

enumerator **ESP_HF_AT_RESPONSE_CODE_DELAYED**

delayed

enumerator **ESP_HF_AT_RESPONSE_CODE_BLACKLISTED**

blacklisted

enumerator **ESP_HF_AT_RESPONSE_CODE_CME**

CME error

enum **esp_hf_at_response_t**

Values:

enumerator **ESP_HF_AT_RESPONSE_ERROR**

enumerator **ESP_HF_AT_RESPONSE_OK**

enum **esp_hf_cme_err_t**

Extended Audio Gateway Error Result Code Response.

Values:

enumerator **ESP_HF_CME_AG_FAILURE**

ag failure

enumerator **ESP_HF_CME_NO_CONNECTION_TO_PHONE**

no connection to phone

enumerator **ESP_HF_CME_OPERATION_NOT_ALLOWED**

operation not allowed

enumerator **ESP_HF_CME_OPERATION_NOT_SUPPORTED**

operation not supported

enumerator **ESP_HF_CME_PH_SIM_PIN_REQUIRED**

PH-SIM PIN Required

enumerator **ESP_HF_CME_SIM_NOT_INSERTED**

SIM not inserted

enumerator **ESP_HF_CME_SIM_PIN_REQUIRED**

SIM PIN required

enumerator **ESP_HF_CME_SIM_PUK_REQUIRED**

SIM PUK required

enumerator **ESP_HF_CME_SIM_FAILURE**

SIM failure

enumerator **ESP_HF_CME_SIM_BUSY**
SIM busy

enumerator **ESP_HF_CME_INCORRECT_PASSWORD**
incorrect password

enumerator **ESP_HF_CME_SIM_PIN2_REQUIRED**
SIM PIN2 required

enumerator **ESP_HF_CME_SIM_PUK2_REQUIRED**
SIM PUK2 required

enumerator **ESP_HF_CME_MEMEORY_FULL**
memory full

enumerator **ESP_HF_CME_INVALID_INDEX**
invalid index

enumerator **ESP_HF_CME_MEMEORY_FAILURE**
memory failure

enumerator **ESP_HF_CME_TEXT_STRING_TOO_LONG**
test string too long

enumerator **ESP_HF_CME_INVALID_CHARACTERS_IN_TEXT_STRING**
invalid characters in text string

enumerator **ESP_HF_CME_DIAL_STRING_TOO_LONG**
dial string too long

enumerator **ESP_HF_CME_INVALID_CHARACTERS_IN_DIAL_STRING**
invalid characters in dial string

enumerator **ESP_HF_CME_NO_NETWORK_SERVICE**
no network service

enumerator **ESP_HF_CME_NETWORK_TIMEOUT**
network timeout

enumerator **ESP_HF_CME_NETWORK_NOT_ALLOWED**
network not allowed —emergency calls only

HFP CLIENT API

API Reference

Header File

- components/bt/host/bluedroid/api/include/api/esp_hf_client_api.h

Functions

esp_err_t **esp_hf_client_register_callback** (*esp_hf_client_cb_t* callback)

Register application callback function to HFP client module. This function should be called only after esp_bluedroid_enable() completes successfully.

Parameters **callback** –**[in]** HFP client event callback function

Returns

- ESP_OK: success
- ESP_INVALID_STATE: if bluetooth stack is not yet enabled
- ESP_FAIL: if callback is a NULL function pointer

esp_err_t **esp_hf_client_init** (void)

Initialize the bluetooth HFP client module. This function should be called after esp_bluedroid_enable() completes successfully.

Returns

- ESP_OK: if the initialization request is sent successfully
- ESP_INVALID_STATE: if bluetooth stack is not yet enabled
- ESP_FAIL: others

esp_err_t **esp_hf_client_deinit** (void)

De-initialize for HFP client module. This function should be called only after esp_bluedroid_enable() completes successfully.

Returns

- ESP_OK: success
- ESP_INVALID_STATE: if bluetooth stack is not yet enabled
- ESP_FAIL: others

esp_err_t **esp_hf_client_connect** (*esp_bd_addr_t* remote_bda)

Establish a Service Level Connection to remote bluetooth HFP audio gateway(AG) device. This function must be called after esp_hf_client_init() and before esp_hf_client_deinit().

Parameters **remote_bda** –**[in]** remote bluetooth device address

Returns

- ESP_OK: connect request is sent to lower layer
- ESP_INVALID_STATE: if bluetooth stack is not yet enabled
- ESP_FAIL: others

esp_err_t **esp_hf_client_disconnect** (*esp_bd_addr_t* remote_bda)

Disconnect from the remote HFP audio gateway. This function must be called after esp_hf_client_init() and before esp_hf_client_deinit().

Parameters **remote_bda** –**[in]** remote bluetooth device address

Returns

- ESP_OK: disconnect request is sent to lower layer
- ESP_INVALID_STATE: if bluetooth stack is not yet enabled
- ESP_FAIL: others

esp_err_t **esp_hf_client_connect_audio** (*esp_bd_addr_t* remote_bda)

Create audio connection with remote HFP AG. As a precondition to use this API, Service Level Connection shall exist with AG.

Parameters **remote_bda** –**[in]** remote bluetooth device address

Returns

- ESP_OK: disconnect request is sent to lower layer
- ESP_INVALID_STATE: if bluetooth stack is not yet enabled
- ESP_FAIL: others

esp_err_t **esp_hf_client_disconnect_audio** (*esp_bd_addr_t* remote_bda)

Release the established audio connection with remote HFP AG. As a precondition to use this API, Service Level Connection shall exist with AG.

Parameters **remote_bda** –**[in]** remote bluetooth device address

Returns

- ESP_OK: disconnect request is sent to lower layer
- ESP_INVALID_STATE: if bluetooth stack is not yet enabled
- ESP_FAIL: others

esp_err_t **esp_hf_client_start_voice_recognition**(void)

Enable voice recognition in the AG. As a precondition to use this API, Service Level Connection shall exist with AG.

Returns

- ESP_OK: disconnect request is sent to lower layer
- ESP_INVALID_STATE: if bluetooth stack is not yet enabled
- ESP_FAIL: others

esp_err_t **esp_hf_client_stop_voice_recognition**(void)

Disable voice recognition in the AG. As a precondition to use this API, Service Level Connection shall exist with AG.

Returns

- ESP_OK: disconnect request is sent to lower layer
- ESP_INVALID_STATE: if bluetooth stack is not yet enabled
- ESP_FAIL: others

esp_err_t **esp_hf_client_volume_update**(*esp_hf_volume_control_target_t* type, int volume)

Volume synchronization with AG. As a precondition to use this API, Service Level Connection shall exist with AG.

Parameters

- **type** –**[in]** volume control target, speaker or microphone
- **volume** –**[in]** gain of the speaker of microphone, ranges 0 to 15

Returns

- ESP_OK: disconnect request is sent to lower layer
- ESP_INVALID_STATE: if bluetooth stack is not yet enabled
- ESP_FAIL: others

esp_err_t **esp_hf_client_dial**(const char *number)

Place a call with a specified number, if number is NULL, last called number is called. As a precondition to use this API, Service Level Connection shall exist with AG.

Parameters **number** –**[in]** number string of the call. If NULL, the last number is called(aka re-dial)

Returns

- ESP_OK: disconnect request is sent to lower layer
- ESP_INVALID_STATE: if bluetooth stack is not yet enabled
- ESP_FAIL: others

esp_err_t **esp_hf_client_dial_memory**(int location)

Place a call with number specified by location(speed dial). As a precondition to use this API, Service Level Connection shall exist with AG.

Parameters **location** –**[in]** location of the number in the memory

Returns

- ESP_OK: disconnect request is sent to lower layer
- ESP_INVALID_STATE: if bluetooth stack is not yet enabled
- ESP_FAIL: others

esp_err_t **esp_hf_client_send_chld_cmd**(*esp_hf_chld_type_t* chld, int idx)

Send call hold and multiparty commands, or enhanced call control commands(Use AT+CHLD). As a precondition to use this API, Service Level Connection shall exist with AG.

Parameters

- **chld** –**[in]** AT+CHLD call hold and multiparty handling AT command.

- **idx** –**[in]** used in Enhanced Call Control Mechanisms, used if chld is ESP_HF_CHLD_TYPE_REL_X or ESP_HF_CHLD_TYPE_PRIV_X

Returns

- ESP_OK: disconnect request is sent to lower layer
- ESP_INVALID_STATE: if bluetooth stack is not yet enabled
- ESP_FAIL: others

esp_err_t **esp_hf_client_send_btrh_cmd**(*esp_hf_btrh_cmd_t* btrh)

Send response and hold action command(Send AT+BTRH command) As a precondition to use this API, Service Level Connection shall exist with AG.

Parameters **btrh** –**[in]** response and hold action to send

Returns

- ESP_OK: disconnect request is sent to lower layer
- ESP_INVALID_STATE: if bluetooth stack is not yet enabled
- ESP_FAIL: others

esp_err_t **esp_hf_client_answer_call**(void)

Answer an incoming call(send ATA command). As a precondition to use this API, Service Level Connection shall exist with AG.

Returns

- ESP_OK: disconnect request is sent to lower layer
- ESP_INVALID_STATE: if bluetooth stack is not yet enabled
- ESP_FAIL: others

esp_err_t **esp_hf_client_reject_call**(void)

Reject an incoming call(send AT+CHUP command). As a precondition to use this API, Service Level Connection shall exist with AG.

Returns

- ESP_OK: disconnect request is sent to lower layer
- ESP_INVALID_STATE: if bluetooth stack is not yet enabled
- ESP_FAIL: others

esp_err_t **esp_hf_client_query_current_calls**(void)

Query list of current calls in AG(send AT+CLCC command). As a precondition to use this API, Service Level Connection shall exist with AG.

Returns

- ESP_OK: disconnect request is sent to lower layer
- ESP_INVALID_STATE: if bluetooth stack is not yet enabled
- ESP_FAIL: others

esp_err_t **esp_hf_client_query_current_operator_name**(void)

Query the name of currently selected network operator in AG(use AT+COPS commands). As a precondition to use this API, Service Level Connection shall exist with AG.

Returns

- ESP_OK: disconnect request is sent to lower layer
- ESP_INVALID_STATE: if bluetooth stack is not yet enabled
- ESP_FAIL: others

esp_err_t **esp_hf_client_retrieve_subscriber_info**(void)

Get subscriber information number from AG(send AT+CNUM command) As a precondition to use this API, Service Level Connection shall exist with AG.

Returns

- ESP_OK: disconnect request is sent to lower layer
- ESP_INVALID_STATE: if bluetooth stack is not yet enabled
- ESP_FAIL: others

esp_err_t **esp_hf_client_send_dtmf**(char code)

Transmit DTMF codes during an ongoing call(use AT+VTS commands) As a precondition to use this API, Service Level Connection shall exist with AG.

Parameters **code** –**[in]** dtmf code, single ascii character in the set 0-9, #, *, A-D

Returns

- ESP_OK: disconnect request is sent to lower layer
- ESP_INVALID_STATE: if bluetooth stack is not yet enabled
- ESP_FAIL: others

esp_err_t **esp_hf_client_request_last_voice_tag_number**(void)

Request a phone number from AG corresponding to last voice tag recorded (send AT+BINP command). As a precondition to use this API, Service Level Connection shall exist with AG.

Returns

- ESP_OK: disconnect request is sent to lower layer
- ESP_INVALID_STATE: if bluetooth stack is not yet enabled
- ESP_FAIL: others

esp_err_t **esp_hf_client_send_nrec**(void)

Disable echo cancellation and noise reduction in the AG (use AT+NREC=0 command). As a precondition to use this API, Service Level Connection shall exist with AG.

Returns

- ESP_OK: NREC=0 request is sent to lower layer
- ESP_INVALID_STATE: if bluetooth stack is not yet enabled
- ESP_FAIL: others

esp_err_t **esp_hf_client_register_data_callback**(*esp_hf_client_incoming_data_cb_t* recv, *esp_hf_client_outgoing_data_cb_t* send)

Register HFP client data output function; the callback is only used in the case that Voice Over HCI is enabled.

Parameters

- **recv** –**[in]** HFP client incoming data callback function
- **send** –**[in]** HFP client outgoing data callback function

Returns

- ESP_OK: success
- ESP_INVALID_STATE: if bluetooth stack is not yet enabled
- ESP_FAIL: if callback is a NULL function pointer

void **esp_hf_client_outgoing_data_ready**(void)

Trigger the lower-layer to fetch and send audio data. This function is only only used in the case that Voice Over HCI is enabled. After this function is called, lower layer will invoke esp_hf_client_outgoing_data_cb_t to fetch data.

As a precondition to use this API, Service Level Connection shall exist with AG.

void **esp_hf_client_pcm_resample_init**(uint32_t src_sps, uint32_t bits, uint32_t channels)

Initialize the down sampling converter. This is a utility function that can only be used in the case that Voice Over HCI is enabled.

Parameters

- **src_sps** –**[in]** original samples per second(source audio data, i.e. 48000, 32000, 16000, 44100, 22050, 11025)
- **bits** –**[in]** number of bits per pcm sample (16)
- **channels** –**[in]** number of channels (i.e. mono(1), stereo(2)···)

void **esp_hf_client_pcm_resample_deinit**(void)

Deinitialize the down sampling converter.

int32_t **esp_hf_client_pcm_resample**(void *src, uint32_t in_bytes, void *dst)

Down sampling utility to convert high sampling rate into 8K/16bits 1-channel mode PCM samples. This can only be used in the case that Voice Over HCI is enabled.

Parameters

- **src** –**[in]** pointer to the buffer where the original sampling PCM are stored
- **in_bytes** –**[in]** length of the input PCM sample buffer in byte
- **dst** –**[in]** pointer to the buffer which is to be used to store the converted PCM samples

Returns number of samples converted

Unions

union **esp_hf_client_cb_param_t**

#include <esp_hf_client_api.h> HFP client callback parameters.

Public Members

struct *esp_hf_client_cb_param_t*::*hf_client_conn_stat_param* **conn_stat**

HF callback param of ESP_HF_CLIENT_CONNECTION_STATE_EVT

struct *esp_hf_client_cb_param_t*::*hf_client_audio_stat_param* **audio_stat**

HF callback param of ESP_HF_CLIENT_AUDIO_STATE_EVT

struct *esp_hf_client_cb_param_t*::*hf_client_bvra_param* **bvra**

HF callback param of ESP_HF_CLIENT_BVRA_EVT

struct *esp_hf_client_cb_param_t*::*hf_client_service_availability_param* **service_availability**

HF callback param of ESP_HF_CLIENT_CIND_SERVICE_AVAILABILITY_EVT

struct *esp_hf_client_cb_param_t*::*hf_client_network_roaming_param* **roaming**

HF callback param of ESP_HF_CLIENT_CIND_ROAMING_STATUS_EVT

struct *esp_hf_client_cb_param_t*::*hf_client_signal_strength_ind_param* **signal_strength**

HF callback param of ESP_HF_CLIENT_CIND_SIGNAL_STRENGTH_EVT

struct *esp_hf_client_cb_param_t*::*hf_client_battery_level_ind_param* **battery_level**

HF callback param of ESP_HF_CLIENT_CIND_BATTERY_LEVEL_EVT

struct *esp_hf_client_cb_param_t*::*hf_client_current_operator_param* **cops**

HF callback param of ESP_HF_CLIENT_COPS_CURRENT_OPERATOR_EVT

struct *esp_hf_client_cb_param_t*::*hf_client_call_ind_param* **call**

HF callback param of ESP_HF_CLIENT_CIND_CALL_EVT

struct *esp_hf_client_cb_param_t*::*hf_client_call_setup_ind_param* **call_setup**

HF callback param of ESP_HF_CLIENT_BVRA_EVT

struct *esp_hf_client_cb_param_t*::*hf_client_call_held_ind_param* **call_held**

HF callback param of ESP_HF_CLIENT_CIND_CALL_HELD_EVT

struct *esp_hf_client_cb_param_t*::*hf_client_btrh_param* **btrh**

HF callback param of ESP_HF_CLIENT_BRTH_EVT

struct *esp_hf_client_cb_param_t*::*hf_client_clip_param* **clip**

HF callback param of ESP_HF_CLIENT_CLIP_EVT

struct *esp_hf_client_cb_param_t*::*hf_client_ccwa_param* **ccwa**

HF callback param of ESP_HF_CLIENT_BVRA_EVT

struct *esp_hf_client_cb_param_t*::*hf_client_clcc_param* **clcc**

HF callback param of ESP_HF_CLIENT_CLCC_EVT

struct *esp_hf_client_cb_param_t*::*hf_client_volume_control_param* **volume_control**

HF callback param of ESP_HF_CLIENT_VOLUME_CONTROL_EVT

struct *esp_hf_client_cb_param_t*::*hf_client_at_response_param* **at_response**

HF callback param of ESP_HF_CLIENT_AT_RESPONSE_EVT

struct *esp_hf_client_cb_param_t*::*hf_client_cnum_param* **cnum**

HF callback param of ESP_HF_CLIENT_CNUM_EVT

struct *esp_hf_client_cb_param_t*::*hf_client_bsirparam* **bsir**

HF callback param of ESP_HF_CLIENT_BSIR_EVT

struct *esp_hf_client_cb_param_t*::*hf_client_binp_param* **binp**

HF callback param of ESP_HF_CLIENT_BINP_EVT

struct **hf_client_at_response_param**

#include <esp_hf_client_api.h> ESP_HF_CLIENT_AT_RESPONSE_EVT.

Public Members

esp_hf_at_response_code_t **code**

AT response code

esp_hf_cme_err_t **cme**

Extended Audio Gateway Error Result Code

struct **hf_client_audio_stat_param**

#include <esp_hf_client_api.h> ESP_HF_CLIENT_AUDIO_STATE_EVT.

Public Members

esp_hf_client_audio_state_t **state**

audio connection state

esp_bd_addr_t **remote_bda**

remote bluetooth device address

struct **hf_client_battery_level_ind_param**

#include <esp_hf_client_api.h> ESP_HF_CLIENT_CIND_BATTERY_LEVEL_EVT.

Public Members

int **value**

battery charge value, ranges from 0 to 5

struct **hf_client_binp_param**

#include <esp_hf_client_api.h> ESP_HF_CLIENT_BINP_EVT.

Public Members

const char ***number**

phone number corresponding to the last voice tag in the HF

struct **hf_client_bsirparam**

#include <esp_hf_client_api.h> ESP_HF_CLIENT_BSIR_EVT.

Public Members

esp_hf_client_in_band_ring_state_t **state**

setting state of in-band ring tone

struct **hf_client_btrh_param**

#include <esp_hf_client_api.h> ESP_HF_CLIENT_BTRH_EVT.

Public Members

esp_hf_btrh_status_t **status**

call hold and response status result code

struct **hf_client_bvra_param**

#include <esp_hf_client_api.h> ESP_HF_CLIENT_BVRA_EVT.

Public Members

esp_hf_vr_state_t **value**

voice recognition state

struct **hf_client_call_held_ind_param**

#include <esp_hf_client_api.h> ESP_HF_CLIENT_CIND_CALL_HELD_EVT.

Public Members

esp_hf_call_held_status_t **status**

bluetooth proprietary call hold status indicator

struct **hf_client_call_ind_param**

#include <esp_hf_client_api.h> ESP_HF_CLIENT_CIND_CALL_EVT.

Public Members

esp_hf_call_status_t **status**

call status indicator

struct **hf_client_call_setup_ind_param**

#include <esp_hf_client_api.h> ESP_HF_CLIENT_CIND_CALL_SETUP_EVT.

Public Members

esp_hf_call_setup_status_t **status**

call setup status indicator

struct **hf_client_ccwa_param**

#include <esp_hf_client_api.h> ESP_HF_CLIENT_CCWA_EVT.

Public Members

const char ***number**

phone number string of waiting call

struct **hf_client_clcc_param**

#include <esp_hf_client_api.h> ESP_HF_CLIENT_CLCC_EVT.

Public Members

int **idx**

numbering(starting with 1) of the call

esp_hf_current_call_direction_t **dir**

direction of the call

esp_hf_current_call_status_t **status**

status of the call

esp_hf_current_call_mpty_type_t **mpty**

multi-party flag

char ***number**

phone number(optional)

struct **hf_client_clip_param**

#include <esp_hf_client_api.h> ESP_HF_CLIENT_CLIP_EVT.

Public Members

const char ***number**

phone number string of call

struct **hf_client_cnum_param**

#include <esp_hf_client_api.h> ESP_HF_CLIENT_CNUM_EVT.

Public Members

const char ***number**

phone number string

esp_hf_subscriber_service_type_t **type**

service type that the phone number relates to

struct **hf_client_conn_stat_param**

#include <esp_hf_client_api.h> ESP_HF_CLIENT_CONNECTION_STATE_EVT.

Public Members

esp_hf_client_connection_state_t **state**

HF connection state

uint32_t **peer_feat**

AG supported features

uint32_t **chld_feat**

AG supported features on call hold and multiparty services

esp_bd_addr_t **remote_bda**

remote bluetooth device address

struct **hf_client_current_operator_param**

#include <esp_hf_client_api.h> ESP_HF_CLIENT_COPS_CURRENT_OPERATOR_EVT.

Public Members

const char ***name**

name of the network operator

struct **hf_client_network_roaming_param**

#include <esp_hf_client_api.h> ESP_HF_CLIENT_CIND_ROAMING_STATUS_EVT.

Public Members

esp_hf_roaming_status_t **status**

roaming status

struct **hf_client_service_availability_param**

#include <esp_hf_client_api.h> ESP_HF_CLIENT_CIND_SERVICE_AVAILABILITY_EVT.

Public Members

esp_hf_network_state_t **status**

service availability status

struct **hf_client_signal_strength_ind_param**

#include <esp_hf_client_api.h> ESP_HF_CLIENT_CIND_SIGNAL_STRENGTH_EVT.

Public Members

int **value**

signal strength value, ranges from 0 to 5

struct **hf_client_volume_control_param**

#include <esp_hf_client_api.h> ESP_HF_CLIENT_VOLUME_CONTROL_EVT.

Public Members

esp_hf_volume_control_target_t **type**

volume control target, speaker or microphone

int **volume**

gain, ranges from 0 to 15

Macros

ESP_BT_HF_CLIENT_NUMBER_LEN

ESP_BT_HF_CLIENT_OPERATOR_NAME_LEN

ESP_HF_CLIENT_PEER_FEAT_3WAY

ESP_HF_CLIENT_PEER_FEAT_ECNR

ESP_HF_CLIENT_PEER_FEAT_VREC

ESP_HF_CLIENT_PEER_FEAT_INBAND

ESP_HF_CLIENT_PEER_FEAT_VTAG

ESP_HF_CLIENT_PEER_FEAT_REJECT

ESP_HF_CLIENT_PEER_FEAT_ECS

ESP_HF_CLIENT_PEER_FEAT_ECC

ESP_HF_CLIENT_PEER_FEAT_EXTERR

ESP_HF_CLIENT_PEER_FEAT_CODEC

ESP_HF_CLIENT_PEER_FEAT_HF_IND

ESP_HF_CLIENT_PEER_FEAT_ESCO_S4

ESP_HF_CLIENT_CHLD_FEAT_REL

ESP_HF_CLIENT_CHLD_FEAT_REL_ACC

ESP_HF_CLIENT_CHLD_FEAT_REL_X

ESP_HF_CLIENT_CHLD_FEAT_HOLD_ACC

ESP_HF_CLIENT_CHLD_FEAT_PRIV_X

ESP_HF_CLIENT_CHLD_FEAT_MERGE

ESP_HF_CLIENT_CHLD_FEAT_MERGE_DETACH

Type Definitions

typedef void (***esp_hf_client_incoming_data_cb_t**)(const uint8_t *buf, uint32_t len)

HFP client incoming data callback function, the callback is useful in case of Voice Over HCI.

Param buf [in] : pointer to incoming data(payload of HCI synchronous data packet), the buffer is allocated inside bluetooth protocol stack and will be released after invoke of the callback is finished.

Param len [in] : size(in bytes) in buf

typedef uint32_t (***esp_hf_client_outgoing_data_cb_t**)(uint8_t *buf, uint32_t len)

HFP client outgoing data callback function, the callback is useful in case of Voice Over HCI. Once audio connection is set up and the application layer has prepared data to send, the lower layer will call this function to read data and then send. This callback is supposed to be implemented as non-blocking, and if data is not enough, return value 0 is supposed.

Param buf [in] : pointer to incoming data(payload of HCI synchronous data packet), the buffer is allocated inside bluetooth protocol stack and will be released after invoke of the callback is finished.

Param len [in] : size(in bytes) in buf

Return length of data successfully read

typedef void (*`esp_hf_client_cb_t`)(*esp_hf_client_cb_event_t* event, *esp_hf_client_cb_param_t* *param)

HFP client callback function type.

Param event : Event type
Param param : Pointer to callback parameter

Enumerations

enum `esp_hf_client_connection_state_t`

Bluetooth HFP RFCOMM connection and service level connection status.

Values:

enumerator `ESP_HF_CLIENT_CONNECTION_STATE_DISCONNECTED`

RFCOMM data link channel released

enumerator `ESP_HF_CLIENT_CONNECTION_STATE_CONNECTING`

connecting remote device on the RFCOMM data link

enumerator `ESP_HF_CLIENT_CONNECTION_STATE_CONNECTED`

RFCOMM connection established

enumerator `ESP_HF_CLIENT_CONNECTION_STATE_SLC_CONNECTED`

service level connection established

enumerator `ESP_HF_CLIENT_CONNECTION_STATE_DISCONNECTING`

disconnecting with remote device on the RFCOMM dat link

enum `esp_hf_client_audio_state_t`

Bluetooth HFP audio connection status.

Values:

enumerator `ESP_HF_CLIENT_AUDIO_STATE_DISCONNECTED`

audio connection released

enumerator `ESP_HF_CLIENT_AUDIO_STATE_CONNECTING`

audio connection has been initiated

enumerator `ESP_HF_CLIENT_AUDIO_STATE_CONNECTED`

audio connection is established

enumerator `ESP_HF_CLIENT_AUDIO_STATE_CONNECTED_MSBC`

mSBC audio connection is established

enum `esp_hf_client_in_band_ring_state_t`

in-band ring tone state

Values:

enumerator `ESP_HF_CLIENT_IN_BAND_RINGTONE_NOT_PROVIDED`

enumerator **ESP_HF_CLIENT_IN_BAND_RINGTONE_PROVIDED**

enum **esp_hf_client_cb_event_t**

HF CLIENT callback events.

Values:

enumerator **ESP_HF_CLIENT_CONNECTION_STATE_EVT**

connection state changed event

enumerator **ESP_HF_CLIENT_AUDIO_STATE_EVT**

audio connection state change event

enumerator **ESP_HF_CLIENT_BVRA_EVT**

voice recognition state change event

enumerator **ESP_HF_CLIENT_CIND_CALL_EVT**

call indication

enumerator **ESP_HF_CLIENT_CIND_CALL_SETUP_EVT**

call setup indication

enumerator **ESP_HF_CLIENT_CIND_CALL_HELD_EVT**

call held indication

enumerator **ESP_HF_CLIENT_CIND_SERVICE_AVAILABILITY_EVT**

network service availability indication

enumerator **ESP_HF_CLIENT_CIND_SIGNAL_STRENGTH_EVT**

signal strength indication

enumerator **ESP_HF_CLIENT_CIND_ROAMING_STATUS_EVT**

roaming status indication

enumerator **ESP_HF_CLIENT_CIND_BATTERY_LEVEL_EVT**

battery level indication

enumerator **ESP_HF_CLIENT_COPS_CURRENT_OPERATOR_EVT**

current operator information

enumerator **ESP_HF_CLIENT_BTRH_EVT**

call response and hold event

enumerator **ESP_HF_CLIENT_CLIP_EVT**

Calling Line Identification notification

enumerator **ESP_HF_CLIENT_CCWA_EVT**

call waiting notification

enumerator **ESP_HF_CLIENT_CLCC_EVT**

list of current calls notification

enumerator **ESP_HF_CLIENT_VOLUME_CONTROL_EVT**

audio volume control command from AG, provided by +VGM or +VGS message

enumerator **ESP_HF_CLIENT_AT_RESPONSE_EVT**

AT command response event

enumerator **ESP_HF_CLIENT_CNUM_EVT**

subscriber information response from AG

enumerator **ESP_HF_CLIENT_BSIR_EVT**

setting of in-band ring tone

enumerator **ESP_HF_CLIENT_BINP_EVT**

requested number of last voice tag from AG

enumerator **ESP_HF_CLIENT_RING_IND_EVT**

ring indication event

HFP AG API

API Reference

Header File

- components/bt/host/bluedroid/api/include/api/esp_hf_ag_api.h

Functions

esp_err_t **esp_bt_hf_register_callback**(*esp_hf_cb_t* callback)

Register application callback function to HFP AG module. This function should be called only after esp_bluedroid_enable() completes successfully.

Parameters **callback** –**[in]** HFP AG event callback function

Returns

- ESP_OK: success
- ESP_INVALID_STATE: if bluetooth stack is not yet enabled
- ESP_FAIL: if callback is a NULL function pointer

esp_err_t **esp_bt_hf_init**(*esp_bd_addr_t* remote_addr)

Initialize the bluetooth HF AG module. This function should be called after esp_bluedroid_enable() completes successfully.

Parameters **remote_addr** –**[in]** remote bluetooth device address

Returns

- ESP_OK: if the initialization request is sent successfully
- ESP_INVALID_STATE: if bluetooth stack is not yet enabled
- ESP_FAIL: others

esp_err_t **esp_bt_hf_deinit**(*esp_bd_addr_t* remote_addr)

De-initialize for HF AG module. This function should be called only after esp_bluedroid_enable() completes successfully.

Parameters **remote_addr** –**[in]** remote bluetooth device address

Returns

- ESP_OK: success
- ESP_INVALID_STATE: if bluetooth stack is not yet enabled
- ESP_FAIL: others

esp_err_t **esp_bt_hf_connect**(*esp_bd_addr_t* remote_bda)

To establish a Service Level Connection to remote bluetooth HFP client device. This function must be called after esp_bt_hf_init() and before esp_bt_hf_deinit().

Parameters **remote_bda** –**[in]** remote bluetooth HFP client device address

Returns

- ESP_OK: connect request is sent to lower layer
- ESP_INVALID_STATE: if bluetooth stack is not yet enabled
- ESP_FAIL: others

esp_err_t **esp_bt_hf_disconnect**(*esp_bd_addr_t* remote_bda)

Disconnect from the remote HFP client. This function must be called after esp_bt_hf_init() and before esp_bt_hf_deinit().

Parameters **remote_bda** –**[in]** remote bluetooth device address

Returns

- ESP_OK: disconnect request is sent to lower layer
- ESP_INVALID_STATE: if bluetooth stack is not yet enabled
- ESP_FAIL: others

esp_err_t **esp_bt_hf_connect_audio**(*esp_bd_addr_t* remote_bda)

Create audio connection with remote HFP client. As a precondition to use this API, Service Level Connection shall exist with HFP client.

Parameters **remote_bda** –**[in]** remote bluetooth device address

Returns

- ESP_OK: disconnect request is sent to lower layer
- ESP_INVALID_STATE: if bluetooth stack is not yet enabled
- ESP_FAIL: others

esp_err_t **esp_bt_hf_disconnect_audio**(*esp_bd_addr_t* remote_bda)

Release the established audio connection with remote HFP client. As a precondition to use this API, Service Level Connection shall exist with HFP client.

Parameters **remote_bda** –**[in]** remote bluetooth device address

Returns

- ESP_OK: disconnect request is sent to lower layer
- ESP_INVALID_STATE: if bluetooth stack is not yet enabled
- ESP_FAIL: others

esp_err_t **esp_bt_hf_vra**(*esp_bd_addr_t* remote_bda, *esp_hf_vr_state_t* value)

Response of Volume Recognition Command(AT+VRA) from HFP client. As a precondition to use this API, Service Level Connection shall exist with HFP client.

Parameters

- **remote_bda** –**[in]** the device address of voice recognization initiator
- **value** –**[in]** 0 - voice recognition disabled, 1- voice recognition enabled

Returns

- ESP_OK: disconnect request is sent to lower layer
- ESP_INVALID_STATE: if bluetooth stack is not yet enabled
- ESP_FAIL: others

esp_err_t **esp_bt_hf_volume_control**(*esp_bd_addr_t* remote_bda, *esp_hf_volume_control_target_t* type, int volume)

Volume synchronization with HFP client. As a precondition to use this API, Service Level Connection shall exist with HFP client.

Parameters

- **remote_bda** –**[in]** remote bluetooth device address
- **type** –**[in]** volume control target, speaker or microphone
- **volume** –**[in]** gain of the speaker of microphone, ranges 0 to 15

Returns

- ESP_OK: disconnect request is sent to lower layer
- ESP_INVALID_STATE: if bluetooth stack is not yet enabled
- ESP_FAIL: others

esp_err_t **esp_hf_unat_response**(*esp_bd_addr_t* remote_addr, char *unat)

Handle Unknown AT command from HFP Client. As a precondition to use this API, Service Level Connection shall exist with HFP client.

Parameters

- **remote_addr** –**[in]** remote bluetooth device address
- **unat** –**[in]** User AT command response to HF Client. It will response "ERROR" by default if unat is NULL.

Returns

- ESP_OK: disconnect request is sent to lower layer
- ESP_INVALID_STATE: if bluetooth stack is not yet enabled
- ESP_FAIL: others

esp_err_t **esp_bt_hf_cmee_response**(*esp_bd_addr_t* remote_bda, *esp_hf_at_response_code_t* response_code, *esp_hf_cme_err_t* error_code)

Unsolicited send extend AT error code to HFP Client. As a precondition to use this API, Service Level Connection shall exist with HFP client.

Parameters

- **remote_bda** –**[in]** remote bluetooth device address
- **response_code** –**[in]** AT command response code
- **error_code** –**[in]** CME error code

Returns

- ESP_OK: disconnect request is sent to lower layer
- ESP_INVALID_STATE: if bluetooth stack is not yet enabled
- ESP_FAIL: others

esp_err_t **esp_bt_hf_indchange_notification**(*esp_bd_addr_t* remote_addr, *esp_hf_call_status_t* call_state, *esp_hf_call_setup_status_t* call_setup_state, *esp_hf_network_state_t* ntk_state, int signal)

Usolicited send device status notificationto HFP Client. As a precondition to use this API, Service Level Connection shall exist with HFP client.

Parameters

- **remote_addr** –**[in]** remote bluetooth device address
- **call_state** –**[in]** call state
- **call_setup_state** –**[in]** call setup state
- **ntk_state** –**[in]** network service state
- **signal** –**[in]** signal strength from 0 to 5

Returns

- ESP_OK: disconnect request is sent to lower layer
- ESP_INVALID_STATE: if bluetooth stack is not yet enabled
- ESP_FAIL: others

esp_err_t **esp_bt_hf_cind_response**(*esp_bd_addr_t* remote_addr, *esp_hf_call_status_t* call_state, *esp_hf_call_setup_status_t* call_setup_state, *esp_hf_network_state_t* ntk_state, int signal, *esp_hf_roaming_status_t* roam, int batt_lev, *esp_hf_call_held_status_t* call_held_status)

Response to device individual indicatiors to HFP Client. As a precondition to use this API, Service Level Connection shall exist with HFP client.

Parameters

- **remote_addr** –**[in]** remote bluetooth device address

- **call_state** –**[in]** call state
- **call_setup_state** –**[in]** call setup state
- **ntk_state** –**[in]** network service state
- **signal** –**[in]** signal strength from 0 to 5
- **roam** –**[in]** roam state
- **batt_lev** –**[in]** batery level from 0 to 5
- **call_held_status** –**[in]** call held status

Returns

- ESP_OK: disconnect request is sent to lower layer
- ESP_INVALID_STATE: if bluetooth stack is not yet enabled
- ESP_FAIL: others

esp_err_t **esp_bt_hf_cops_response**(*esp_bd_addr_t* remote_addr, char *name)

Reponse for AT+COPS command from HF Client. As a precondition to use this API, Service Level Connection shall exist with HFP client.

Parameters

- **remote_addr** –**[in]** remote bluetooth device address
- **name** –**[in]** current operator name

Returns

- ESP_OK: disconnect request is sent to lower layer
- ESP_INVALID_STATE: if bluetooth stack is not yet enabled
- ESP_FAIL: others

esp_err_t **esp_bt_hf_clcc_response**(*esp_bd_addr_t* remote_addr, int index, *esp_hf_current_call_direction_t* dir, *esp_hf_current_call_status_t* current_call_state, *esp_hf_current_call_mode_t* mode, *esp_hf_current_call_mpty_type_t* mpty, char *number, *esp_hf_call_addr_type_t* type)

Response to AT+CLCC command from HFP Client. As a precondition to use this API, Service Level Connection shall exist with HFP client.

Parameters

- **remote_addr** –**[in]** remote bluetooth device address
- **index** –**[in]** the index of current call
- **dir** –**[in]** call direction (incoming/outgoing)
- **current_call_state** –**[in]** current call state
- **mode** –**[in]** current call mode (voice/data/fax)
- **mpty** –**[in]** single or multi type
- **number** –**[in]** current call number
- **type** –**[in]** international type or unknow

Returns

- ESP_OK: disconnect request is sent to lower layer
- ESP_INVALID_STATE: if bluetooth stack is not yet enabled
- ESP_FAIL: others

esp_err_t **esp_bt_hf_cnum_response**(*esp_bd_addr_t* remote_addr, char *number, *esp_hf_subscriber_service_type_t* type)

Response for AT+CNUM command from HF Client. As a precondition to use this API, Service Level Connection shall exist with HFP client.

Parameters

- **remote_addr** –**[in]** remote bluetooth device address
- **number** –**[in]** registration number
- **type** –**[in]** service type (unknown/voice/fax)

Returns

- ESP_OK: disconnect request is sent to lower layer
- ESP_INVALID_STATE: if bluetooth stack is not yet enabled
- ESP_FAIL: others

esp_err_t **esp_bt_hf_bsir**(*esp_bd_addr_t* remote_addr, *esp_hf_in_band_ring_state_t* state)

Inform HF Client that AG Provided in-band ring tone or not. As a precondition to use this API, Service Level Connection shall exist with HFP client.

Parameters

- **remote_addr** –**[in]** remote bluetooth device address
- **state** –**[in]** in-band ring tone state

Returns

- ESP_OK: disconnect request is sent to lower layer
- ESP_INVALID_STATE: if bluetooth stack is not yet enabled
- ESP_FAIL: others

esp_err_t **esp_bt_hf_answer_call**(*esp_bd_addr_t* remote_addr, int num_active, int num_held, *esp_hf_call_status_t* call_state, *esp_hf_call_setup_status_t* call_setup_state, char *number, *esp_hf_call_addr_type_t* call_addr_type)

Answer Incoming Call from AG. As a precondition to use this API, Service Level Connection shall exist with HFP client.

Parameters

- **remote_addr** –**[in]** remote bluetooth device address
- **num_active** –**[in]** the number of active call
- **num_held** –**[in]** the number of held call
- **call_state** –**[in]** call state
- **call_setup_state** –**[in]** call setup state
- **number** –**[in]** number of the incoming call
- **call_addr_type** –**[in]** call address type

Returns

- ESP_OK: disconnect request is sent to lower layer
- ESP_INVALID_STATE: if bluetooth stack is not yet enabled
- ESP_FAIL: others

esp_err_t **esp_bt_hf_reject_call**(*esp_bd_addr_t* remote_addr, int num_active, int num_held, *esp_hf_call_status_t* call_state, *esp_hf_call_setup_status_t* call_setup_state, char *number, *esp_hf_call_addr_type_t* call_addr_type)

Reject Incoming Call from AG. As a precondition to use this API, Service Level Connection shall exist with HFP client.

Parameters

- **remote_addr** –**[in]** remote bluetooth device address
- **num_active** –**[in]** the number of active call
- **num_held** –**[in]** the number of held call
- **call_state** –**[in]** call state
- **call_setup_state** –**[in]** call setup state
- **number** –**[in]** number of the incoming call
- **call_addr_type** –**[in]** call address type

Returns

- ESP_OK: disconnect request is sent to lower layer
- ESP_INVALID_STATE: if bluetooth stack is not yet enabled
- ESP_FAIL: others

esp_err_t **esp_bt_hf_out_call**(*esp_bd_addr_t* remote_addr, int num_active, int num_held, *esp_hf_call_status_t* call_state, *esp_hf_call_setup_status_t* call_setup_state, char *number, *esp_hf_call_addr_type_t* call_addr_type)

Initiate a call from AG. As a precondition to use this API, Service Level Connection shall exist with HFP client.

Parameters

- **remote_addr** –**[in]** remote bluetooth device address
- **num_active** –**[in]** the number of active call

- **num_held** –**[in]** the number of held call
- **call_state** –**[in]** call state
- **call_setup_state** –**[in]** call setup state
- **number** –**[in]** number of the outgoing call
- **call_addr_type** –**[in]** call address type

Returns

- ESP_OK: disconnect request is sent to lower layer
- ESP_INVALID_STATE: if bluetooth stack is not yet enabled
- ESP_FAIL: others

esp_err_t **esp_bt_hf_end_call**(*esp_bd_addr_t* remote_addr, int num_active, int num_held, *esp_hf_call_status_t* call_state, *esp_hf_call_setup_status_t* call_setup_state, char *number, *esp_hf_call_addr_type_t* call_addr_type)

End an ongoing call. As a precondition to use this API, Service Level Connection shall exist with HFP client.

Parameters

- **remote_addr** –**[in]** remote bluetooth device address
- **num_active** –**[in]** the number of active call
- **num_held** –**[in]** the number of held call
- **call_state** –**[in]** call state
- **call_setup_state** –**[in]** call setup state
- **number** –**[in]** number of the call
- **call_addr_type** –**[in]** call address type

Returns

- ESP_OK: disconnect request is sent to lower layer
- ESP_INVALID_STATE: if bluetooth stack is not yet enabled
- ESP_FAIL: others

esp_err_t **esp_bt_hf_register_data_callback**(*esp_hf_incoming_data_cb_t* recv, *esp_hf_outgoing_data_cb_t* send)

Register AG data output function. The callback is only used in the case that Voice Over HCI is enabled.

Parameters

- **recv** –**[in]** HFP client incoming data callback function
- **send** –**[in]** HFP client outgoing data callback function

Returns

- ESP_OK: success
- ESP_INVALID_STATE: if bluetooth stack is not yet enabled
- ESP_FAIL: if callback is a NULL function pointer

void **esp_hf_outgoing_data_ready**(void)

Trigger the lower-layer to fetch and send audio data.

This function is only used in the case that Voice Over HCI is enabled. As a precondition to use this API, Service Level Connection shall exist with HFP client. After this function is called, lower layer will invoke esp_hf_client_outgoing_data_cb_t to fetch data

Unions

union **esp_hf_cb_param_t**

#include <esp_hf_ag_api.h> HFP AG callback parameters.

Public Members

struct *esp_hf_cb_param_t*::*hf_conn_stat_param* **conn_stat**

AG callback param of ESP_HF_CONNECTION_STATE_EVT

struct *esp_hf_cb_param_t*::*hf_audio_stat_param* **audio_stat**

AG callback param of ESP_HF_AUDIO_STATE_EVT

struct *esp_hf_cb_param_t*::*hf_vra_rep_param* **vra_rep**

AG callback param of ESP_HF_BVRA_RESPONSE_EVT

struct *esp_hf_cb_param_t*::*hf_volume_control_param* **volume_control**

AG callback param of ESP_HF_VOLUME_CONTROL_EVT

struct *esp_hf_cb_param_t*::*hf_unat_rep_param* **unat_rep**

AG callback param of ESP_HF_UNAT_RESPONSE_EVT

struct *esp_hf_cb_param_t*::*hf_cind_param* **cind**

AG callback param of ESP_HF_CIND_RESPONSE_EVT

struct *esp_hf_cb_param_t*::*hf_out_call_param* **out_call**

AG callback param of ESP_HF_DIAL_EVT

struct *esp_hf_cb_param_t*::*hf_vts_rep_param* **vts_rep**

AG callback param of ESP_HF_VTS_RESPONSE_EVT

struct *esp_hf_cb_param_t*::*hf_nrec_param* **nrec**

AG callback param of ESP_HF_NREC_RESPONSE_EVT

struct *esp_hf_cb_param_t*::*hf_wbs_rep_param* **wbs_rep**

AG callback param of ESP_HF_WBS_RESPONSE_EVT

struct *esp_hf_cb_param_t*::*hf_bcs_rep_param* **bcs_rep**

AG callback param of ESP_HF_BCS_RESPONSE_EVT

struct **hf_audio_stat_param**

#include <*esp_hf_ag_api.h*> ESP_HF_AUDIO_STATE_EVT.

Public Members

esp_bd_addr_t **remote_addr**

Remote bluetooth device address

esp_hf_audio_state_t **state**

Audio connection state

struct **hf_bcs_rep_param**

#include <*esp_hf_ag_api.h*> ESP_HF_BCS_RESPONSE_EVT.

Public Members

esp_hf_wbs_config_t **mode**

codec mode CVSD or mSBC

struct **hf_cind_param**

#include <esp_hf_ag_api.h> ESP_HF_CIND_RESPONSE_EVT.

Public Members

esp_hf_call_status_t **call_status**

call status indicator

esp_hf_call_setup_status_t **call_setup_status**

call setup status indicator

esp_hf_network_state_t **svc**

bluetooth proprietary call hold status indicator

int **signal_strength**

bluetooth proprietary call hold status indicator

esp_hf_roaming_status_t **roam**

bluetooth proprietary call hold status indicator

int **battery_level**

battery charge value, ranges from 0 to 5

esp_hf_call_held_status_t **call_held_status**

bluetooth proprietary call hold status indicator

struct **hf_conn_stat_param**

#include <esp_hf_ag_api.h> ESP_HS_CONNECTION_STATE_EVT.

Public Members

esp_bd_addr_t **remote_bda**

Remote bluetooth device address

esp_hf_connection_state_t **state**

Connection state

uint32_t **peer_feat**

HF supported features

uint32_t **chld_feat**

AG supported features on call hold and multiparty services

struct **hf_nrec_param**

#include <esp_hf_ag_api.h> ESP_HF_NREC_RESPOSNE_EVT.

Public Members

esp_hf_nrec_t **state**

NREC enabled or disabled

struct **hf_out_call_param**

#include <esp_hf_ag_api.h> ESP_HF_DIAL_EVT.

Public Members

esp_bd_addr_t **remote_addr**

remote bluetooth device address

char ***num_or_loc**

location in phone memory

struct **hf_unat_rep_param**

#include <esp_hf_ag_api.h> ESP_HF_UNAT_RESPOSNE_EVT.

Public Members

char ***unat**

Unknown AT command string

struct **hf_volume_control_param**

#include <esp_hf_ag_api.h> ESP_HF_VOLUME_CONTROL_EVT.

Public Members

esp_hf_volume_type_t **type**

Volume control target, speaker or microphone

int **volume**

Gain, ranges from 0 to 15

struct **hf_vra_rep_param**

#include <esp_hf_ag_api.h> ESP_HF_BVRA_RESPONSE_EVT.

Public Members

esp_bd_addr_t **remote_addr**

Remote bluetooth device address

esp_hf_vr_state_t **value**

Voice recognition state

struct **hf_vts_rep_param**

#include <esp_hf_ag_api.h> ESP_HF_VTS_RESPOSNE_EVT.

Public Members

char ***code**

MTF code from HF Client

struct **hf_wbs_rep_param**

#include <esp_hf_ag_api.h> ESP_HF_WBS_RESPONSE_EVT.

Public Members

esp_hf_wbs_config_t **codec**

codec mode CVSD or mSBC

Macros

ESP_HF_PEER_FEAT_3WAY

ESP_HF_PEER_FEAT_ECNR

ESP_HF_PEER_FEAT_VREC

ESP_HF_PEER_FEAT_INBAND

ESP_HF_PEER_FEAT_VTAG

ESP_HF_PEER_FEAT_REJECT

ESP_HF_PEER_FEAT_ECS

ESP_HF_PEER_FEAT_ECC

ESP_HF_PEER_FEAT_EXTERR

ESP_HF_PEER_FEAT_CODEC

ESP_HF_PEER_FEAT_HF_IND

ESP_HF_PEER_FEAT_ESCO_S4

ESP_HF_CHLD_FEAT_REL

ESP_HF_CHLD_FEAT_REL_ACC

ESP_HF_CHLD_FEAT_REL_X

ESP_HF_CHLD_FEAT_HOLD_ACC

ESP_HF_CHLD_FEAT_PRIV_X

ESP_HF_CHLD_FEAT_MERGE

ESP_HF_CHLD_FEAT_MERGE_DETACH

Type Definitions

typedef void (***esp_hf_incoming_data_cb_t**)(const uint8_t *buf, uint32_t len)

AG incoming data callback function, the callback is useful in case of Voice Over HCI.

Param buf **[in]** : pointer to incoming data(payload of HCI synchronous data packet), the buffer is allocated inside bluetooth protocol stack and will be released after invoke of the callback is finished.
Param len **[in]** : size(in bytes) in buf

typedef uint32_t (***esp_hf_outgoing_data_cb_t**)(uint8_t *buf, uint32_t len)

AG outgoing data callback function, the callback is useful in case of Voice Over HCI. Once audio connection is set up and the application layer has prepared data to send, the lower layer will call this function to read data and then send. This callback is supposed to be implemented as non-blocking, and if data is not enough, return value 0 is supposed.

Param buf **[in]** : pointer to incoming data(payload of HCI synchronous data packet), the buffer is allocated inside bluetooth protocol stack and will be released after invoke of the callback is finished.
Param len **[in]** : size(in bytes) in buf
Return length of data successfully read

typedef void (***esp_hf_cb_t**)(*esp_hf_cb_event_t* event, *esp_hf_cb_param_t* *param)

HF AG callback function type.

Param event : Event type
Param param : Pointer to callback parameter

Enumerations

enum **esp_hf_cb_event_t**

HF callback events.

Values:

enumerator **ESP_HF_CONNECTION_STATE_EVT**

Connection state changed event

enumerator **ESP_HF_AUDIO_STATE_EVT**

Audio connection state change event

enumerator **ESP_HF_BVRA_RESPONSE_EVT**

Voice recognition state change event

enumerator **ESP_HF_VOLUME_CONTROL_EVT**

Audio volume control command from HF Client, provided by +VGM or +VGS message

enumerator **ESP_HF_UNAT_RESPONSE_EVT**

Unknown AT cmd Response

enumerator **ESP_HF_IND_UPDATE_EVT**

Indicator Update Event

enumerator **ESP_HF_CIND_RESPONSE_EVT**

Call And Device Indicator Response

enumerator **ESP_HF_COPS_RESPONSE_EVT**

Current operator information

enumerator **ESP_HF_CLCC_RESPONSE_EVT**

List of current calls notification

enumerator **ESP_HF_CNUM_RESPONSE_EVT**

Subscriber information response from HF Client

enumerator **ESP_HF_VTS_RESPONSE_EVT**

Enable or not DTMF

enumerator **ESP_HF_NREC_RESPONSE_EVT**

Enable or not NREC

enumerator **ESP_HF_ATA_RESPONSE_EVT**

Answer an Incoming Call

enumerator **ESP_HF_CHUP_RESPONSE_EVT**

Reject an Incoming Call

enumerator **ESP_HF_DIAL_EVT**

Origin an outgoing call with specific number or the dial the last number

enumerator **ESP_HF_WBS_RESPONSE_EVT**

Codec Status

enumerator **ESP_HF_BCS_RESPONSE_EVT**

Final Codec Choice

2.1.5 NimBLE-based host APIs

Overview

Apache MyNewt NimBLE is a highly configurable and BT SIG qualifiable BLE stack providing both host and controller functionalities. ESP-IDF supports NimBLE host stack which is specifically ported for ESP32 platform and FreeRTOS. The underlying controller is still the same (as in case of Bluedroid) providing VHCI interface. Refer

to NimBLE user guide for a complete list of features and additional information on NimBLE stack. Most features of NimBLE including BLE Mesh are supported by ESP-IDF. The porting layer is kept cleaner by maintaining all the existing APIs of NimBLE along with a single ESP-NimBLE API for initialization, making it simpler for the application developers.

Architecture

Currently, NimBLE host and controller support different transports such as UART and RAM between them. However, RAM transport cannot be used as is in case of ESP as ESP controller supports VHCI interface and buffering schemes used by NimBLE host is incompatible with that used by ESP controller. Therefore, a new transport between NimBLE host and ESP controller has been added. This is depicted in the figure below. This layer is responsible for maintaining pool of transport buffers and formatting buffers exchanges between host and controller as per the requirements.

Fig. 1: ESP NimBLE Stack

Threading Model

The NimBLE host can run inside the application thread or can have its own independent thread. This flexibility is inherently provided by NimBLE design. By default, a thread is spawned by the porting function `nimble_port_freertos_init`. This behavior can be changed by overriding the same function. For BLE Mesh, additional thread (advertising thread) is used which keeps on feeding advertisement events to the main thread.

Programming Sequence

To begin with, make sure that the NimBLE stack is enabled from menuconfig *choose NimBLE for the Bluetooth host*.

Typical programming sequence with NimBLE stack consists of the following steps:

- Initialize NVS flash using *`nvs_flash_init()`* API. This is because ESP controller uses NVS during initialization.
- Call *`esp_nimble_hci_and_controller_init()`* to initialize ESP controller as well as transport layer. This will also link the host and controller modules together. Alternatively, if ESP controller is already initialized, then *`esp_nimble_hci_init()`* can be called for the remaining initialization.
- Initialize the host stack using `nimble_port_init`.
- Initialize the required NimBLE host configuration parameters and callbacks
- Perform application specific tasks/initialization
- Run the thread for host stack using `nimble_port_freertos_init`

This documentation does not cover NimBLE APIs. Refer to NimBLE tutorial for more details on the programming sequence/NimBLE APIs for different scenarios.

API Reference

Header File

- components/bt/host/nimble/esp-hci/include/esp_nimble_hci.h

Functions

esp_err_t **esp_nimble_hci_init**(void)

Initialize VHCI transport layer between NimBLE Host and ESP Bluetooth controller.

This function initializes the transport buffers to be exchanged between NimBLE host and ESP controller. It also registers required host callbacks with the controller.

Returns

- ESP_OK if the initialization is successful
- Appropriate error code from esp_err_t in case of an error

esp_err_t **esp_nimble_hci_and_controller_init**(void)

Initialize ESP Bluetooth controller(link layer) and VHCI transport layer between NimBLE Host and ESP Bluetooth controller.

This function initializes ESP controller in BLE only mode and the transport buffers to be exchanged between NimBLE host and ESP controller. It also registers required host callbacks with the controller.

Below is the sequence of APIs to be called to init/enable NimBLE host and ESP controller:

```
void ble_host_task(void *param)
{
     nimble_port_run(); //This function will return only when nimble_port_
↪stop() is executed.
     nimble_port_freertos_deinit();
}

int ret = esp_nimble_hci_and_controller_init();
if (ret != ESP_OK) {
     ESP_LOGE(TAG, "esp_nimble_hci_and_controller_init() failed with error: %d
↪", ret);
     return;
}

nimble_port_init();

//Initialize the NimBLE Host configuration

nimble_port_freertos_init(ble_host_task);
```

nimble_port_freertos_init() is an optional call that creates a new task in which the NimBLE host will run. The task function should have a call to nimble_port_run(). If a separate task is not required, calling nimble_port_run() will run the NimBLE host in the current task.

Returns

- ESP_OK if the initialization is successful
- Appropriate error code from esp_err_t in case of an error

esp_err_t **esp_nimble_hci_deinit**(void)

Deinitialize VHCI transport layer between NimBLE Host and ESP Bluetooth controller.

Note: This function should be called after the NimBLE host is deinitialized.

Returns

- ESP_OK if the deinitialization is successful
- Appropriate error codes from esp_err_t in case of an error

esp_err_t **esp_nimble_hci_and_controller_deinit**(void)

Deinitialize VHCI transport layer between NimBLE Host and ESP Bluetooth controller and disable and deinitialize the controller.

Below is the sequence of APIs to be called to disable/deinit NimBLE host and ESP controller:

```
int ret = nimble_port_stop();
if (ret == 0) {
     nimble_port_deinit();

     ret = esp_nimble_hci_and_controller_deinit();
     if (ret != ESP_OK) {
         ESP_LOGE(TAG, "esp_nimble_hci_and_controller_deinit() failed with␣
↪error: %d", ret);
     }
}
```

If nimble_port_freertos_init() is used during initialization, then nimble_port_freertos_deinit() should be called in the host task after nimble_port_run().

Note: This function should not be executed in the context of Bluetooth host task.

Note: This function should be called after the NimBLE host is deinitialized.

Returns

- ESP_OK if the deinitialization is successful
- Appropriate error codes from esp_err_t in case of an error

Macros

BLE_HCI_UART_H4_NONE

BLE_HCI_UART_H4_CMD

BLE_HCI_UART_H4_ACL

BLE_HCI_UART_H4_SCO

BLE_HCI_UART_H4_EVT

2.1.6 ESP-BLE-MESH

With various features of ESP-BLE-MESH, users can create a managed flooding mesh network for several scenarios, such as lighting, sensor and etc.

For an ESP32 to join and work on a ESP-BLE-MESH network, it must be provisioned firstly. By provisioning, the ESP32, as an unprovisioned device, will join the ESP-BLE-MESH network and become a ESP-BLE-MESH node, communicating with other nodes within or beyond the radio range.

Apart from ESP-BLE-MESH nodes, inside ESP-BLE-MESH network, there is also ESP32 that works as ESP-BLE-MESH Provisioner, which could provision unprovisioned devices into ESP-BLE-MESH nodes and configure the nodes with various features.

For information how to start using ESP32 and ESP-BLE-MESH, please see the Section *Getting Started with ESP-BLE-MESH*. If you are interested in information on ESP-BLE-MESH architecture, including some details of software implementation, please see Section *ESP-BLE-MESH Architecture*.

Application Examples and Demos

Please refer to Sections *ESP-BLE-MESH Examples* and *ESP-BLE-MESH Demo Videos*.

API Reference

ESP-BLE-MESH APIs are divided into the following parts:

- *ESP-BLE-MESH Definitions*
- *ESP-BLE-MESH Core API Reference*
- *ESP-BLE-MESH Models API Reference*

ESP-BLE-MESH Definitions

This section contains only one header file, which lists the following items of ESP-BLE-MESH.

- ID of all the models and related message opcodes
- Structs of model, element and Composition Data
- Structs of used by ESP-BLE-MESH Node/Provisioner for provisioning
- Structs used to transmit/receive messages
- Event types and related event parameters

Header File

- components/bt/esp_ble_mesh/api/esp_ble_mesh_defs.h

Unions

union **esp_ble_mesh_prov_cb_param_t**

#include <esp_ble_mesh_defs.h> BLE Mesh Node/Provisioner callback parameters union.

Public Members

struct *esp_ble_mesh_prov_cb_param_t*::*ble_mesh_prov_register_comp_param* **prov_register_comp**

Event parameter of ESP_BLE_MESH_PROV_REGISTER_COMP_EVT

struct *esp_ble_mesh_prov_cb_param_t*::*ble_mesh_set_unprov_dev_name_comp_param* **node_set_unprov_dev_name_comp**

Event parameter of ESP_BLE_MESH_NODE_SET_UNPROV_DEV_NAME_COMP_EVT

struct *esp_ble_mesh_prov_cb_param_t*::*ble_mesh_prov_enable_comp_param* **node_prov_enable_comp**

Event parameter of ESP_BLE_MESH_NODE_PROV_ENABLE_COMP_EVT

struct *esp_ble_mesh_prov_cb_param_t*::*ble_mesh_prov_disable_comp_param* **node_prov_disable_comp**

Event parameter of ESP_BLE_MESH_NODE_PROV_DISABLE_COMP_EVT

struct *esp_ble_mesh_prov_cb_param_t*::*ble_mesh_link_open_evt_param* **node_prov_link_open**

Event parameter of ESP_BLE_MESH_NODE_PROV_LINK_OPEN_EVT

struct *esp_ble_mesh_prov_cb_param_t*::*ble_mesh_link_close_evt_param* **node_prov_link_close**

Event parameter of ESP_BLE_MESH_NODE_PROV_LINK_CLOSE_EVT

struct *esp_ble_mesh_prov_cb_param_t*::*ble_mesh_output_num_evt_param* **node_prov_output_num**

Event parameter of ESP_BLE_MESH_NODE_PROV_OUTPUT_NUMBER_EVT

struct *esp_ble_mesh_prov_cb_param_t*::*ble_mesh_output_str_evt_param* **node_prov_output_str**

Event parameter of ESP_BLE_MESH_NODE_PROV_OUTPUT_STRING_EVT

struct *esp_ble_mesh_prov_cb_param_t*::*ble_mesh_input_evt_param* **node_prov_input**

Event parameter of ESP_BLE_MESH_NODE_PROV_INPUT_EVT

struct *esp_ble_mesh_prov_cb_param_t*::*ble_mesh_provision_complete_evt_param* **node_prov_complete**

Event parameter of ESP_BLE_MESH_NODE_PROV_COMPLETE_EVT

struct *esp_ble_mesh_prov_cb_param_t*::*ble_mesh_provision_reset_param* **node_prov_reset**

Event parameter of ESP_BLE_MESH_NODE_PROV_RESET_EVT

struct *esp_ble_mesh_prov_cb_param_t*::*ble_mesh_set_oob_pub_key_comp_param* **node_prov_set_oob_pub_key_comp**

Event parameter of ESP_BLE_MESH_NODE_PROV_SET_OOB_PUB_KEY_COMP_EVT

struct *esp_ble_mesh_prov_cb_param_t*::*ble_mesh_input_number_comp_param* **node_prov_input_num_comp**

Event parameter of ESP_BLE_MESH_NODE_PROV_INPUT_NUM_COMP_EVT

struct *esp_ble_mesh_prov_cb_param_t*::*ble_mesh_input_string_comp_param* **node_prov_input_str_comp**

Event parameter of ESP_BLE_MESH_NODE_PROV_INPUT_STR_COMP_EVT

struct *esp_ble_mesh_prov_cb_param_t*::*ble_mesh_proxy_identity_enable_comp_param* **node_proxy_identity_enable_comp**

Event parameter of ESP_BLE_MESH_NODE_PROXY_IDENTITY_ENABLE_COMP_EVT

struct *esp_ble_mesh_prov_cb_param_t*::*ble_mesh_proxy_gatt_enable_comp_param* **node_proxy_gatt_enable_comp**

Event parameter of ESP_BLE_MESH_NODE_PROXY_GATT_ENABLE_COMP_EVT

struct *esp_ble_mesh_prov_cb_param_t*::*ble_mesh_proxy_gatt_disable_comp_param* **node_proxy_gatt_disable_comp**

Event parameter of ESP_BLE_MESH_NODE_PROXY_GATT_DISABLE_COMP_EVT

struct *esp_ble_mesh_prov_cb_param_t*::*ble_mesh_node_add_local_net_key_comp_param* **node_add_net_key_comp**

Event parameter of ESP_BLE_MESH_NODE_ADD_LOCAL_NET_KEY_COMP_EVT

struct *esp_ble_mesh_prov_cb_param_t*::*ble_mesh_node_add_local_app_key_comp_param* **node_add_app_key_comp**

Event parameter of ESP_BLE_MESH_NODE_ADD_LOCAL_APP_KEY_COMP_EVT

struct *esp_ble_mesh_prov_cb_param_t*::*ble_mesh_node_bind_local_mod_app_comp_param*
node_bind_app_key_to_model_comp

Event parameter of ESP_BLE_MESH_NODE_BIND_APP_KEY_TO_MODEL_COMP_EVT

struct *esp_ble_mesh_prov_cb_param_t*::*ble_mesh_provisioner_recv_unprov_adv_pkt_param*
provisioner_recv_unprov_adv_pkt

Event parameter of ESP_BLE_MESH_PROVISIONER_RECV_UNPROV_ADV_PKT_EVT

struct *esp_ble_mesh_prov_cb_param_t*::*ble_mesh_provisioner_prov_enable_comp_param*
provisioner_prov_enable_comp

Event parameter of ESP_BLE_MESH_PROVISIONER_PROV_ENABLE_COMP_EVT

struct *esp_ble_mesh_prov_cb_param_t*::*ble_mesh_provisioner_prov_disable_comp_param*
provisioner_prov_disable_comp

Event parameter of ESP_BLE_MESH_PROVISIONER_PROV_DISABLE_COMP_EVT

struct *esp_ble_mesh_prov_cb_param_t*::*ble_mesh_provisioner_link_open_evt_param*
provisioner_prov_link_open

Event parameter of ESP_BLE_MESH_PROVISIONER_PROV_LINK_OPEN_EVT

struct *esp_ble_mesh_prov_cb_param_t*::*ble_mesh_provisioner_prov_read_oob_pub_key_evt_param*
provisioner_prov_read_oob_pub_key

Event parameter of ESP_BLE_MESH_PROVISIONER_PROV_READ_OOB_PUB_KEY_EVT

struct *esp_ble_mesh_prov_cb_param_t*::*ble_mesh_provisioner_prov_input_evt_param*
provisioner_prov_input

Event parameter of ESP_BLE_MESH_PROVISIONER_PROV_INPUT_EVT

struct *esp_ble_mesh_prov_cb_param_t*::*ble_mesh_provisioner_prov_output_evt_param*
provisioner_prov_output

Event parameter of ESP_BLE_MESH_PROVISIONER_PROV_OUTPUT_EVT

struct *esp_ble_mesh_prov_cb_param_t*::*ble_mesh_provisioner_link_close_evt_param*
provisioner_prov_link_close

Event parameter of ESP_BLE_MESH_PROVISIONER_PROV_LINK_CLOSE_EVT

struct *esp_ble_mesh_prov_cb_param_t*::*ble_mesh_provisioner_prov_comp_param*
provisioner_prov_complete

Event parameter of ESP_BLE_MESH_PROVISIONER_PROV_COMPLETE_EVT

struct *esp_ble_mesh_prov_cb_param_t*::*ble_mesh_provisioner_add_unprov_dev_comp_param*
provisioner_add_unprov_dev_comp

Event parameter of ESP_BLE_MESH_PROVISIONER_ADD_UNPROV_DEV_COMP_EVT

struct *esp_ble_mesh_prov_cb_param_t*::*ble_mesh_provisioner_prov_dev_with_addr_comp_param*
provisioner_prov_dev_with_addr_comp

Event parameter of ESP_BLE_MESH_PROVISIONER_PROV_DEV_WITH_ADDR_COMP_EVT

struct *esp_ble_mesh_prov_cb_param_t*::*ble_mesh_provisioner_delete_dev_comp_param*
provisioner_delete_dev_comp

Event parameter of ESP_BLE_MESH_PROVISIONER_DELETE_DEV_COMP_EVT

struct *esp_ble_mesh_prov_cb_param_t*::*ble_mesh_provisioner_set_dev_uuid_match_comp_param* **provisioner_set_dev_uuid_match_comp**

Event parameter of ESP_BLE_MESH_PROVISIONER_SET_DEV_UUID_MATCH_COMP_EVT

struct *esp_ble_mesh_prov_cb_param_t*::*ble_mesh_provisioner_set_prov_data_info_comp_param* **provisioner_set_prov_data_info_comp**

Event parameter of ESP_BLE_MESH_PROVISIONER_SET_PROV_DATA_INFO_COMP_EVT

struct *esp_ble_mesh_prov_cb_param_t*::*ble_mesh_provisioner_set_static_oob_val_comp_param* **provisioner_set_static_oob_val_comp**

Event parameter of ESP_BLE_MESH_PROVISIONER_SET_STATIC_OOB_VALUE_COMP_EVT

struct *esp_ble_mesh_prov_cb_param_t*::*ble_mesh_provisioner_set_primary_elem_addr_comp_param* **provisioner_set_primary_elem_addr_comp**

Event parameter of ESP_BLE_MESH_PROVISIONER_SET_PRIMARY_ELEM_ADDR_COMP_EVT

struct *esp_ble_mesh_prov_cb_param_t*::*ble_mesh_provisioner_prov_read_oob_pub_key_comp_param* **provisioner_prov_read_oob_pub_key_comp**

Event parameter of ESP_BLE_MESH_PROVISIONER_PROV_READ_OOB_PUB_KEY_COMP_EVT

struct *esp_ble_mesh_prov_cb_param_t*::*ble_mesh_provisioner_prov_input_num_comp_param* **provisioner_prov_input_num_comp**

Event parameter of ESP_BLE_MESH_PROVISIONER_PROV_INPUT_NUMBER_COMP_EVT

struct *esp_ble_mesh_prov_cb_param_t*::*ble_mesh_provisioner_prov_input_str_comp_param* **provisioner_prov_input_str_comp**

Event parameter of ESP_BLE_MESH_PROVISIONER_PROV_INPUT_STRING_COMP_EVT

struct *esp_ble_mesh_prov_cb_param_t*::*ble_mesh_provisioner_set_node_name_comp_param* **provisioner_set_node_name_comp**

Event parameter of ESP_BLE_MESH_PROVISIONER_SET_NODE_NAME_COMP_EVT

struct *esp_ble_mesh_prov_cb_param_t*::*ble_mesh_provisioner_add_local_app_key_comp_param* **provisioner_add_app_key_comp**

Event parameter of ESP_BLE_MESH_PROVISIONER_ADD_LOCAL_APP_KEY_COMP_EVT

struct *esp_ble_mesh_prov_cb_param_t*::*ble_mesh_provisioner_update_local_app_key_comp_param* **provisioner_update_app_key_comp**

Event parameter of ESP_BLE_MESH_PROVISIONER_UPDATE_LOCAL_APP_KEY_COMP_EVT

struct *esp_ble_mesh_prov_cb_param_t*::*ble_mesh_provisioner_bind_local_mod_app_comp_param* **provisioner_bind_app_key_to_model_comp**

Event parameter of ESP_BLE_MESH_PROVISIONER_BIND_APP_KEY_TO_MODEL_COMP_EVT

struct *esp_ble_mesh_prov_cb_param_t*::*ble_mesh_provisioner_add_local_net_key_comp_param* **provisioner_add_net_key_comp**

Event parameter of ESP_BLE_MESH_PROVISIONER_ADD_LOCAL_NET_KEY_COMP_EVT

struct *esp_ble_mesh_prov_cb_param_t*::*ble_mesh_provisioner_update_local_net_key_comp_param* **provisioner_update_net_key_comp**

Event parameter of ESP_BLE_MESH_PROVISIONER_UPDATE_LOCAL_NET_KEY_COMP_EVT

struct *esp_ble_mesh_prov_cb_param_t*::*ble_mesh_provisioner_store_node_comp_data_comp_param* **provisioner_store_node_comp_data_comp**

Event parameter of ESP_BLE_MESH_PROVISIONER_STORE_NODE_COMP_DATA_COMP_EVT

struct *esp_ble_mesh_prov_cb_param_t*::*ble_mesh_provisioner_delete_node_with_uuid_comp_param* **provisioner_delete_node_with_uuid_comp**

Event parameter of ESP_BLE_MESH_PROVISIONER_DELETE_NODE_WITH_UUID_COMP_EVT

struct *esp_ble_mesh_prov_cb_param_t*::*ble_mesh_provisioner_delete_node_with_addr_comp_param* **provisioner_delete_node_with_addr_comp**

Event parameter of ESP_BLE_MESH_PROVISIONER_DELETE_NODE_WITH_ADDR_COMP_EVT

int **err_code**

Indicate the result of enabling/disabling to receive heartbeat messages by the Provisioner

Indicate the result of setting the heartbeat filter type by the Provisioner

Indicate the result of setting the heartbeat filter address by the Provisioner

Indicate the result of directly erasing settings by the Provisioner

Indicate the result of opening settings with index by the Provisioner

Indicate the result of opening settings with user id by the Provisioner

Indicate the result of closing settings with index by the Provisioner

Indicate the result of closing settings with user id by the Provisioner

Indicate the result of deleting settings with index by the Provisioner

Indicate the result of deleting settings with user id by the Provisioner

bool **enable**

Indicate enabling or disabling receiving heartbeat messages

struct *esp_ble_mesh_prov_cb_param_t*::[anonymous] **provisioner_enable_heartbeat_recv_comp**

ESP_BLE_MESH_PROVISIONER_ENABLE_HEARTBEAT_RECV_COMP_EVT.

Event parameters of ESP_BLE_MESH_PROVISIONER_ENABLE_HEARTBEAT_RECV_COMP_EVT

uint8_t **type**

Type of the filter used for receiving heartbeat messages

struct *esp_ble_mesh_prov_cb_param_t*::[anonymous] **provisioner_set_heartbeat_filter_type_comp**

ESP_BLE_MESH_PROVISIONER_SET_HEARTBEAT_FILTER_TYPE_COMP_EVT.

Event parameters of ESP_BLE_MESH_PROVISIONER_SET_HEARTBEAT_FILTER_TYPE_COMP_EVT

uint8_t **op**

Operation (add, remove, clean)

uint16_t **hb_src**

Heartbeat source address

uint16_t **hb_dst**

Heartbeat destination address

struct *esp_ble_mesh_prov_cb_param_t*::[anonymous] **provisioner_set_heartbeat_filter_info_comp**

ESP_BLE_MESH_PROVISIONER_SET_HEARTBEAT_FILTER_INFO_COMP_EVT.

Event parameters of ESP_BLE_MESH_PROVISIONER_SET_HEARTBEAT_FILTER_INFO_COMP_EVT

uint8_t **init_ttl**

Heartbeat InitTTL

uint8_t **rx_ttl**

Heartbeat RxTTL

uint8_t **hops**

Heartbeat hops (InitTTL - RxTTL + 1)

uint16_t **feature**

Bit field of currently active features of the node

int8_t **rssi**

RSSI of the heartbeat message

struct *esp_ble_mesh_prov_cb_param_t*::[anonymous] **provisioner_recv_heartbeat**

ESP_BLE_MESH_PROVISIONER_RECV_HEARTBEAT_MESSAGE_EVT.

Event parameters of ESP_BLE_MESH_PROVISIONER_RECV_HEARTBEAT_MESSAGE_EVT

struct *esp_ble_mesh_prov_cb_param_t*::[anonymous] **provisioner_direct_erase_settings_comp**

ESP_BLE_MESH_PROVISIONER_DRIECT_ERASE_SETTINGS_COMP_EVT.

Event parameters of ESP_BLE_MESH_PROVISIONER_DRIECT_ERASE_SETTINGS_COMP_EVT

uint8_t **index**

Index of Provisioner settings

struct *esp_ble_mesh_prov_cb_param_t*::[anonymous] **provisioner_open_settings_with_index_comp**

ESP_BLE_MESH_PROVISIONER_OPEN_SETTINGS_WITH_INDEX_COMP_EVT.

Event parameter of ESP_BLE_MESH_PROVISIONER_OPEN_SETTINGS_WITH_INDEX_COMP_EVT

char **uid**[20 + 1]

Provisioner settings user id

struct *esp_ble_mesh_prov_cb_param_t*::[anonymous] **provisioner_open_settings_with_uid_comp**

ESP_BLE_MESH_PROVISIONER_OPEN_SETTINGS_WITH_UID_COMP_EVT.

Event parameters of ESP_BLE_MESH_PROVISIONER_OPEN_SETTINGS_WITH_UID_COMP_EVT

struct *esp_ble_mesh_prov_cb_param_t*::[anonymous] **provisioner_close_settings_with_index_comp**

ESP_BLE_MESH_PROVISIONER_CLOSE_SETTINGS_WITH_INDEX_COMP_EVT.

Event parameter of ESP_BLE_MESH_PROVISIONER_CLOSE_SETTINGS_WITH_INDEX_COMP_EVT

struct *esp_ble_mesh_prov_cb_param_t*::[anonymous] **provisioner_close_settings_with_uid_comp**

ESP_BLE_MESH_PROVISIONER_CLOSE_SETTINGS_WITH_UID_COMP_EVT.

Event parameters of ESP_BLE_MESH_PROVISIONER_CLOSE_SETTINGS_WITH_UID_COMP_EVT

struct *esp_ble_mesh_prov_cb_param_t*::[anonymous] **provisioner_delete_settings_with_index_comp**

ESP_BLE_MESH_PROVISIONER_DELETE_SETTINGS_WITH_INDEX_COMP_EVT.

Event parameter of ESP_BLE_MESH_PROVISIONER_DELETE_SETTINGS_WITH_INDEX_COMP_EVT

struct *esp_ble_mesh_prov_cb_param_t*::[anonymous] **provisioner_delete_settings_with_uid_comp**

ESP_BLE_MESH_PROVISIONER_DELETE_SETTINGS_WITH_UID_COMP_EVT.

Event parameters of ESP_BLE_MESH_PROVISIONER_DELETE_SETTINGS_WITH_UID_COMP_EVT

struct *esp_ble_mesh_prov_cb_param_t*::*ble_mesh_set_fast_prov_info_comp_param* **set_fast_prov_info_comp**

Event parameter of ESP_BLE_MESH_SET_FAST_PROV_INFO_COMP_EVT

struct *esp_ble_mesh_prov_cb_param_t*::*ble_mesh_set_fast_prov_action_comp_param* **set_fast_prov_action_comp**

Event parameter of ESP_BLE_MESH_SET_FAST_PROV_ACTION_COMP_EVT

struct *esp_ble_mesh_prov_cb_param_t*::*ble_mesh_heartbeat_msg_recv_param* **heartbeat_msg_recv**

Event parameter of ESP_BLE_MESH_HEARTBEAT_MESSAGE_RECV_EVT

struct *esp_ble_mesh_prov_cb_param_t*::*ble_mesh_lpn_enable_comp_param* **lpn_enable_comp**

Event parameter of ESP_BLE_MESH_LPN_ENABLE_COMP_EVT

struct *esp_ble_mesh_prov_cb_param_t*::*ble_mesh_lpn_disable_comp_param* **lpn_disable_comp**

Event parameter of ESP_BLE_MESH_LPN_DISABLE_COMP_EVT

struct *esp_ble_mesh_prov_cb_param_t*::*ble_mesh_lpn_poll_comp_param* **lpn_poll_comp**

Event parameter of ESP_BLE_MESH_LPN_POLL_COMP_EVT

struct *esp_ble_mesh_prov_cb_param_t*::*ble_mesh_lpn_friendship_establish_param* **lpn_friendship_establish**

Event parameter of ESP_BLE_MESH_LPN_FRIENDSHIP_ESTABLISH_EVT

struct *esp_ble_mesh_prov_cb_param_t*::*ble_mesh_lpn_friendship_terminate_param* **lpn_friendship_terminate**

Event parameter of ESP_BLE_MESH_LPN_FRIENDSHIP_TERMINATE_EVT

struct *esp_ble_mesh_prov_cb_param_t*::*ble_mesh_friend_friendship_establish_param* **frnd_friendship_establish**

Event parameter of ESP_BLE_MESH_FRIEND_FRIENDSHIP_ESTABLISH_EVT

struct *esp_ble_mesh_prov_cb_param_t*::*ble_mesh_friend_friendship_terminate_param*
frnd_friendship_terminate

Event parameter of ESP_BLE_MESH_FRIEND_FRIENDSHIP_TERMINATE_EVT

struct *esp_ble_mesh_prov_cb_param_t*::*ble_mesh_proxy_client_recv_adv_pkt_param*
proxy_client_recv_adv_pkt

Event parameter of ESP_BLE_MESH_PROXY_CLIENT_RECV_ADV_PKT_EVT

struct *esp_ble_mesh_prov_cb_param_t*::*ble_mesh_proxy_client_connected_param*
proxy_client_connected

Event parameter of ESP_BLE_MESH_PROXY_CLIENT_CONNECTED_EVT

struct *esp_ble_mesh_prov_cb_param_t*::*ble_mesh_proxy_client_disconnected_param*
proxy_client_disconnected

Event parameter of ESP_BLE_MESH_PROXY_CLIENT_DISCONNECTED_EVT

struct *esp_ble_mesh_prov_cb_param_t*::*ble_mesh_proxy_client_recv_filter_status_param*
proxy_client_recv_filter_status

Event parameter of ESP_BLE_MESH_PROXY_CLIENT_RECV_FILTER_STATUS_EVT

struct *esp_ble_mesh_prov_cb_param_t*::*ble_mesh_proxy_client_connect_comp_param*
proxy_client_connect_comp

Event parameter of ESP_BLE_MESH_PROXY_CLIENT_CONNECT_COMP_EVT

struct *esp_ble_mesh_prov_cb_param_t*::*ble_mesh_proxy_client_disconnect_comp_param*
proxy_client_disconnect_comp

Event parameter of ESP_BLE_MESH_PROXY_CLIENT_DISCONNECT_COMP_EVT

struct *esp_ble_mesh_prov_cb_param_t*::*ble_mesh_proxy_client_set_filter_type_comp_param*
proxy_client_set_filter_type_comp

Event parameter of ESP_BLE_MESH_PROXY_CLIENT_SET_FILTER_TYPE_COMP_EVT

struct *esp_ble_mesh_prov_cb_param_t*::*ble_mesh_proxy_client_add_filter_addr_comp_param*
proxy_client_add_filter_addr_comp

Event parameter of ESP_BLE_MESH_PROXY_CLIENT_ADD_FILTER_ADDR_COMP_EVT

struct *esp_ble_mesh_prov_cb_param_t*::*ble_mesh_proxy_client_remove_filter_addr_comp_param*
proxy_client_remove_filter_addr_comp

Event parameter of ESP_BLE_MESH_PROXY_CLIENT_REMOVE_FILTER_ADDR_COMP_EVT

struct *esp_ble_mesh_prov_cb_param_t*::*ble_mesh_proxy_server_connected_param*
proxy_server_connected

Event parameter of ESP_BLE_MESH_PROXY_SERVER_CONNECTED_EVT

struct *esp_ble_mesh_prov_cb_param_t*::*ble_mesh_proxy_server_disconnected_param*
proxy_server_disconnected

Event parameter of ESP_BLE_MESH_PROXY_SERVER_DISCONNECTED_EVT

struct *esp_ble_mesh_prov_cb_param_t*::*ble_mesh_model_sub_group_addr_comp_param*
model_sub_group_addr_comp

Event parameters of ESP_BLE_MESH_MODEL_SUBSCRIBE_GROUP_ADDR_COMP_EVT

struct *esp_ble_mesh_prov_cb_param_t*::*ble_mesh_model_unsub_group_addr_comp_param* **model_unsub_group_addr_comp**

Event parameters of ESP_BLE_MESH_MODEL_UNSUBSCRIBE_GROUP_ADDR_COMP_EVT

struct *esp_ble_mesh_prov_cb_param_t*::*ble_mesh_deinit_mesh_comp_param* **deinit_mesh_comp**

Event parameter of ESP_BLE_MESH_DEINIT_MESH_COMP_EVT

struct **ble_mesh_deinit_mesh_comp_param**

#include <esp_ble_mesh_defs.h> ESP_BLE_MESH_DEINIT_MESH_COMP_EVT.

Public Members

int **err_code**

Indicate the result of BLE Mesh deinitialization

struct **ble_mesh_friend_friendship_establish_param**

#include <esp_ble_mesh_defs.h> ESP_BLE_MESH_FRIEND_FRIENDSHIP_ESTABLISH_EVT.

Public Members

uint16_t **lpn_addr**

Low Power Node unicast address

struct **ble_mesh_friend_friendship_terminate_param**

#include <esp_ble_mesh_defs.h> ESP_BLE_MESH_FRIEND_FRIENDSHIP_TERMINATE_EVT.

Public Types

enum **[anonymous]**

This enum value is the reason of friendship termination on the friend node side

Values:

enumerator **ESP_BLE_MESH_FRND_FRIENDSHIP_TERMINATE_ESTABLISH_FAIL**

Friend Offer has been sent, but Friend Offer is not received within 1 second, friendship fails to be established

enumerator **ESP_BLE_MESH_FRND_FRIENDSHIP_TERMINATE_POLL_TIMEOUT**

Friendship is established, PollTimeout timer expires and no Friend Poll/Sub Add/Sub Remove is received

enumerator **ESP_BLE_MESH_FRND_FRIENDSHIP_TERMINATE_RECV_FRND_REQ**

Receive Friend Request from existing Low Power Node

enumerator **ESP_BLE_MESH_FRND_FRIENDSHIP_TERMINATE_RECV_FRND_CLEAR**

Receive Friend Clear from other friend node

enumerator **ESP_BLE_MESH_FRND_FRIENDSHIP_TERMINATE_DISABLE**

Friend feature disabled or corresponding NetKey is deleted

Public Members

uint16_t **lpn_addr**

Low Power Node unicast address

enum *esp_ble_mesh_prov_cb_param_t*::*ble_mesh_friend_friendship_terminate_param*::*[anonymous]* **reason**

This enum value is the reason of friendship termination on the friend node side Friendship terminated reason

struct **ble_mesh_heartbeat_msg_recv_param**

#include <esp_ble_mesh_defs.h> ESP_BLE_MESH_HEARTBEAT_MESSAGE_RECV_EVT.

Public Members

uint8_t **hops**

Heartbeat hops (InitTTL - RxTTL + 1)

uint16_t **feature**

Bit field of currently active features of the node

struct **ble_mesh_input_evt_param**

#include <esp_ble_mesh_defs.h> ESP_BLE_MESH_NODE_PROV_INPUT_EVT.

Public Members

esp_ble_mesh_input_action_t **action**

Action of Input OOB Authentication

uint8_t **size**

Size of Input OOB Authentication

struct **ble_mesh_input_number_comp_param**

#include <esp_ble_mesh_defs.h> ESP_BLE_MESH_NODE_PROV_INPUT_NUM_COMP_EVT.

Public Members

int **err_code**

Indicate the result of inputting number

struct **ble_mesh_input_string_comp_param**

#include <esp_ble_mesh_defs.h> ESP_BLE_MESH_NODE_PROV_INPUT_STR_COMP_EVT.

Public Members

int **err_code**

Indicate the result of inputting string

struct **ble_mesh_link_close_evt_param**

#include <esp_ble_mesh_defs.h> ESP_BLE_MESH_NODE_PROV_LINK_CLOSE_EVT.

Public Members

esp_ble_mesh_prov_bearer_t **bearer**

Type of the bearer used when device link is closed

struct **ble_mesh_link_open_evt_param**

#include <esp_ble_mesh_defs.h> ESP_BLE_MESH_NODE_PROV_LINK_OPEN_EVT.

Public Members

esp_ble_mesh_prov_bearer_t **bearer**

Type of the bearer used when device link is open

struct **ble_mesh_lpn_disable_comp_param**

#include <esp_ble_mesh_defs.h> ESP_BLE_MESH_LPN_DISABLE_COMP_EVT.

Public Members

int **err_code**

Indicate the result of disabling LPN functionality

struct **ble_mesh_lpn_enable_comp_param**

#include <esp_ble_mesh_defs.h> ESP_BLE_MESH_LPN_ENABLE_COMP_EVT.

Public Members

int **err_code**

Indicate the result of enabling LPN functionality

struct **ble_mesh_lpn_friendship_establish_param**

#include <esp_ble_mesh_defs.h> ESP_BLE_MESH_LPN_FRIENDSHIP_ESTABLISH_EVT.

Public Members

uint16_t **friend_addr**

Friend Node unicast address

struct **ble_mesh_lpn_friendship_terminate_param**

#include <esp_ble_mesh_defs.h> ESP_BLE_MESH_LPN_FRIENDSHIP_TERMINATE_EVT.

Public Members

uint16_t **friend_addr**

Friend Node unicast address

struct **ble_mesh_lpn_poll_comp_param**

#include <esp_ble_mesh_defs.h> ESP_BLE_MESH_LPN_POLL_COMP_EVT.

Public Members

int **err_code**

Indicate the result of sending Friend Poll

struct **ble_mesh_model_sub_group_addr_comp_param**

#include <esp_ble_mesh_defs.h> ESP_BLE_MESH_MODEL_SUBSCRIBE_GROUP_ADDR_COMP_EVT.

Public Members

int **err_code**

Indicate the result of local model subscribing group address

uint16_t **element_addr**

Element address

uint16_t **company_id**

Company ID

uint16_t **model_id**

Model ID

uint16_t **group_addr**

Group Address

struct **ble_mesh_model_unsub_group_addr_comp_param**

#include <esp_ble_mesh_defs.h> ESP_BLE_MESH_MODEL_UNSUBSCRIBE_GROUP_ADDR_COMP_EVT.

Public Members

int **err_code**

Indicate the result of local model unsubscribing group address

uint16_t **element_addr**

Element address

uint16_t **company_id**

Company ID

uint16_t **model_id**

Model ID

uint16_t **group_addr**

Group Address

struct **ble_mesh_node_add_local_app_key_comp_param**

#include <esp_ble_mesh_defs.h> ESP_BLE_MESH_NODE_ADD_LOCAL_APP_KEY_COMP_EVT.

Public Members

int **err_code**

Indicate the result of adding local AppKey by the node

uint16_t **net_idx**

NetKey Index

uint16_t **app_idx**

AppKey Index

struct **ble_mesh_node_add_local_net_key_comp_param**

#include <esp_ble_mesh_defs.h> ESP_BLE_MESH_NODE_ADD_LOCAL_NET_KEY_COMP_EVT.

Public Members

int **err_code**

Indicate the result of adding local NetKey by the node

uint16_t **net_idx**

NetKey Index

struct **ble_mesh_node_bind_local_mod_app_comp_param**

#include <esp_ble_mesh_defs.h> ESP_BLE_MESH_NODE_BIND_APP_KEY_TO_MODEL_COMP_EVT.

Public Members

int **err_code**

Indicate the result of binding AppKey with model by the node

uint16_t **element_addr**

Element address

uint16_t **app_idx**

AppKey Index

uint16_t **company_id**

Company ID

uint16_t **model_id**

Model ID

struct **ble_mesh_output_num_evt_param**

#include <esp_ble_mesh_defs.h> ESP_BLE_MESH_NODE_PROV_OUTPUT_NUMBER_EVT.

Public Members

esp_ble_mesh_output_action_t **action**

Action of Output OOB Authentication

uint32_t **number**

Number of Output OOB Authentication

struct **ble_mesh_output_str_evt_param**

#include <esp_ble_mesh_defs.h> ESP_BLE_MESH_NODE_PROV_OUTPUT_STRING_EVT.

Public Members

char **string**[8]

String of Output OOB Authentication

struct **ble_mesh_prov_disable_comp_param**

#include <esp_ble_mesh_defs.h> ESP_BLE_MESH_NODE_PROV_DISABLE_COMP_EVT.

Public Members

int **err_code**

Indicate the result of disabling BLE Mesh device

struct **ble_mesh_prov_enable_comp_param**

#include <esp_ble_mesh_defs.h> ESP_BLE_MESH_NODE_PROV_ENABLE_COMP_EVT.

Public Members

int **err_code**

Indicate the result of enabling BLE Mesh device

struct **ble_mesh_prov_register_comp_param**

#include <esp_ble_mesh_defs.h> ESP_BLE_MESH_PROV_REGISTER_COMP_EVT.

Public Members

int **err_code**

Indicate the result of BLE Mesh initialization

struct **ble_mesh_provision_complete_evt_param**

#include <esp_ble_mesh_defs.h> ESP_BLE_MESH_NODE_PROV_COMPLETE_EVT.

Public Members

uint16_t **net_idx**

NetKey Index

uint8_t **net_key**[16]

NetKey

uint16_t **addr**

Primary address

uint8_t **flags**

Flags

uint32_t **iv_index**

IV Index

struct **ble_mesh_provision_reset_param**

#include <esp_ble_mesh_defs.h> ESP_BLE_MESH_NODE_PROV_RESET_EVT.

struct **ble_mesh_provisioner_add_local_app_key_comp_param**

#include <esp_ble_mesh_defs.h> ESP_BLE_MESH_PROVISIONER_ADD_LOCAL_APP_KEY_COMP_EVT.

Public Members

int **err_code**

Indicate the result of adding local AppKey by the Provisioner

uint16_t **net_idx**

NetKey Index

uint16_t **app_idx**

AppKey Index

struct **ble_mesh_provisioner_add_local_net_key_comp_param**

#include <esp_ble_mesh_defs.h> ESP_BLE_MESH_PROVISIONER_ADD_LOCAL_NET_KEY_COMP_EVT.

Public Members

int **err_code**

Indicate the result of adding local NetKey by the Provisioner

uint16_t **net_idx**

NetKey Index

struct **ble_mesh_provisioner_add_unprov_dev_comp_param**

#include <esp_ble_mesh_defs.h> ESP_BLE_MESH_PROVISIONER_ADD_UNPROV_DEV_COMP_EVT.

Public Members

int **err_code**

Indicate the result of adding device into queue by the Provisioner

struct **ble_mesh_provisioner_bind_local_mod_app_comp_param**

#include <esp_ble_mesh_defs.h> ESP_BLE_MESH_PROVISIONER_BIND_APP_KEY_TO_MODEL_COMP_EVT.

Public Members

int **err_code**

Indicate the result of binding AppKey with model by the Provisioner

uint16_t **element_addr**

Element address

uint16_t **app_idx**

AppKey Index

uint16_t **company_id**

Company ID

uint16_t **model_id**

Model ID

struct **ble_mesh_provisioner_delete_dev_comp_param**

#include <esp_ble_mesh_defs.h> ESP_BLE_MESH_PROVISIONER_DELETE_DEV_COMP_EVT.

Public Members

int **err_code**

Indicate the result of deleting device by the Provisioner

struct **ble_mesh_provisioner_delete_node_with_addr_comp_param**

#include <esp_ble_mesh_defs.h> ESP_BLE_MESH_PROVISIONER_DELETE_NODE_WITH_ADDR_COMP_EVT.

Public Members

int **err_code**

Indicate the result of deleting node with unicast address by the Provisioner

uint16_t **unicast_addr**

Node unicast address

struct **ble_mesh_provisioner_delete_node_with_uuid_comp_param**

#include <esp_ble_mesh_defs.h> ESP_BLE_MESH_PROVISIONER_DELETE_NODE_WITH_UUID_COMP_EVT.

Public Members

int **err_code**

Indicate the result of deleting node with uuid by the Provisioner

uint8_t **uuid**[16]

Node device uuid

struct **ble_mesh_provisioner_link_close_evt_param**

#include <esp_ble_mesh_defs.h> ESP_BLE_MESH_PROVISIONER_PROV_LINK_CLOSE_EVT.

Public Members

esp_ble_mesh_prov_bearer_t **bearer**

Type of the bearer used when Provisioner link is closed

uint8_t **reason**

Reason of the closed provisioning link

struct **ble_mesh_provisioner_link_open_evt_param**

#include <esp_ble_mesh_defs.h> ESP_BLE_MESH_PROVISIONER_PROV_LINK_OPEN_EVT.

Public Members

esp_ble_mesh_prov_bearer_t **bearer**

Type of the bearer used when Provisioner link is opened

struct **ble_mesh_provisioner_prov_comp_param**

#include <esp_ble_mesh_defs.h> ESP_BLE_MESH_PROVISIONER_PROV_COMPLETE_EVT.

Public Members

uint16_t **node_idx**

Index of the provisioned device

esp_ble_mesh_octet16_t **device_uuid**

Device UUID of the provisioned device

uint16_t **unicast_addr**

Primary address of the provisioned device

uint8_t **element_num**

Element count of the provisioned device

uint16_t **netkey_idx**

NetKey Index of the provisioned device

struct **ble_mesh_provisioner_prov_dev_with_addr_comp_param**

#include <esp_ble_mesh_defs.h> ESP_BLE_MESH_PROVISIONER_PROV_DEV_WITH_ADDR_COMP_EVT.

Public Members

int **err_code**

Indicate the result of Provisioner starting to provision a device

struct **ble_mesh_provisioner_prov_disable_comp_param**

#include <esp_ble_mesh_defs.h> ESP_BLE_MESH_PROVISIONER_PROV_DISABLE_COMP_EVT.

Public Members

int **err_code**

Indicate the result of disabling BLE Mesh Provisioner

struct **ble_mesh_provisioner_prov_enable_comp_param**

#include <esp_ble_mesh_defs.h> ESP_BLE_MESH_PROVISIONER_PROV_ENABLE_COMP_EVT.

Public Members

int **err_code**

Indicate the result of enabling BLE Mesh Provisioner

struct **ble_mesh_provisioner_prov_input_evt_param**

#include <esp_ble_mesh_defs.h> ESP_BLE_MESH_PROVISIONER_PROV_INPUT_EVT.

Public Members

esp_ble_mesh_oob_method_t **method**

Method of device Output OOB Authentication

esp_ble_mesh_output_action_t **action**

Action of device Output OOB Authentication

uint8_t **size**

Size of device Output OOB Authentication

uint8_t **link_idx**

Index of the provisioning link

struct **ble_mesh_provisioner_prov_input_num_comp_param**

#include <esp_ble_mesh_defs.h> ESP_BLE_MESH_PROVISIONER_PROV_INPUT_NUMBER_COMP_EVT.

Public Members

int **err_code**

Indicate the result of inputting number by the Provisioner

struct **ble_mesh_provisioner_prov_input_str_comp_param**

#include <esp_ble_mesh_defs.h> ESP_BLE_MESH_PROVISIONER_PROV_INPUT_STRING_COMP_EVT.

Public Members

int **err_code**

Indicate the result of inputting string by the Provisioner

struct **ble_mesh_provisioner_prov_output_evt_param**

#include <esp_ble_mesh_defs.h> ESP_BLE_MESH_PROVISIONER_PROV_OUTPUT_EVT.

Public Members

esp_ble_mesh_oob_method_t **method**

Method of device Input OOB Authentication

esp_ble_mesh_input_action_t **action**

Action of device Input OOB Authentication

uint8_t **size**

Size of device Input OOB Authentication

uint8_t **link_idx**

Index of the provisioning link

char **string**[8]

String output by the Provisioner

uint32_t **number**

Number output by the Provisioner

union *esp_ble_mesh_prov_cb_param_t*::*ble_mesh_provisioner_prov_output_evt_param*::[anonymous] **[anonymous]**

struct **ble_mesh_provisioner_prov_read_oob_pub_key_comp_param**

#include <esp_ble_mesh_defs.h> ESP_BLE_MESH_PROVISIONER_PROV_READ_OOB_PUB_KEY_COMP_EVT.

Public Members

int **err_code**

Indicate the result of setting OOB Public Key by the Provisioner

struct **ble_mesh_provisioner_prov_read_oob_pub_key_evt_param**

#include <esp_ble_mesh_defs.h> ESP_BLE_MESH_PROVISIONER_PROV_READ_OOB_PUB_KEY_EVT.

Public Members

uint8_t **link_idx**

Index of the provisioning link

struct **ble_mesh_provisioner_recv_unprov_adv_pkt_param**

#include <esp_ble_mesh_defs.h> ESP_BLE_MESH_PROVISIONER_RECV_UNPROV_ADV_PKT_EVT.

Public Members

uint8_t **dev_uuid**[16]

Device UUID of the unprovisioned device

esp_ble_mesh_bd_addr_t **addr**

Device address of the unprovisioned device

esp_ble_mesh_addr_type_t **addr_type**

Device address type

uint16_t **oob_info**

OOB Info of the unprovisioned device

uint8_t **adv_type**

Avertising type of the unprovisioned device

esp_ble_mesh_prov_bearer_t **bearer**

Bearer of the unprovisioned device

int8_t **rssi**

RSSI of the received advertising packet

struct **ble_mesh_provisioner_set_dev_uuid_match_comp_param**

#include <esp_ble_mesh_defs.h> ESP_BLE_MESH_PROVISIONER_SET_DEV_UUID_MATCH_COMP_EVT.

Public Members

int **err_code**

Indicate the result of setting Device UUID match value by the Provisioner

struct **ble_mesh_provisioner_set_node_name_comp_param**

#include <esp_ble_mesh_defs.h> ESP_BLE_MESH_PROVISIONER_SET_NODE_NAME_COMP_EVT.

Public Members

int **err_code**

Indicate the result of setting provisioned device name by the Provisioner

uint16_t **node_index**

Index of the provisioned device

struct **ble_mesh_provisioner_set_primary_elem_addr_comp_param**

#include <esp_ble_mesh_defs.h> ESP_BLE_MESH_PROVISIONER_SET_PRIMARY_ELEM_ADDR_COMP_EVT.

Public Members

int **err_code**

Indicate the result of setting unicast address of primary element by the Provisioner

struct **ble_mesh_provisioner_set_prov_data_info_comp_param**

#include <esp_ble_mesh_defs.h> ESP_BLE_MESH_PROVISIONER_SET_PROV_DATA_INFO_COMP_EVT.

Public Members

int **err_code**

Indicate the result of setting provisioning info by the Provisioner

struct **ble_mesh_provisioner_set_static_oob_val_comp_param**

#include <esp_ble_mesh_defs.h> ESP_BLE_MESH_PROVISIONER_SET_STATIC_OOB_VALUE_COMP_EVT.

Public Members

int **err_code**

Indicate the result of setting static oob value by the Provisioner

struct **ble_mesh_provisioner_store_node_comp_data_comp_param**

#include <esp_ble_mesh_defs.h> ESP_BLE_MESH_PROVISIONER_STORE_NODE_COMP_DATA_COMP_EVT.

Public Members

int **err_code**

Indicate the result of storing node composition data by the Provisioner

uint16_t **addr**

Node element address

struct **ble_mesh_provisioner_update_local_app_key_comp_param**

#include <esp_ble_mesh_defs.h> ESP_BLE_MESH_PROVISIONER_UPDATE_LOCAL_APP_KEY_COMP_EVT.

Public Members

int **err_code**

Indicate the result of updating local AppKey by the Provisioner

uint16_t **net_idx**

NetKey Index

uint16_t **app_idx**

AppKey Index

struct **ble_mesh_provisioner_update_local_net_key_comp_param**

#include <esp_ble_mesh_defs.h> ESP_BLE_MESH_PROVISIONER_UPDATE_LOCAL_NET_KEY_COMP_EVT.

Public Members

int **err_code**

Indicate the result of updating local NetKey by the Provisioner

uint16_t **net_idx**

NetKey Index

struct **ble_mesh_proxy_client_add_filter_addr_comp_param**

#include <esp_ble_mesh_defs.h> ESP_BLE_MESH_PROXY_CLIENT_ADD_FILTER_ADDR_COMP_EVT.

Public Members

int **err_code**

Indicate the result of Proxy Client add filter address

uint8_t **conn_handle**

Proxy connection handle

uint16_t **net_idx**

Corresponding NetKey Index

struct **ble_mesh_proxy_client_connect_comp_param**

#include <esp_ble_mesh_defs.h> ESP_BLE_MESH_PROXY_CLIENT_CONNECT_COMP_EVT.

Public Members

int **err_code**

Indicate the result of Proxy Client connect

esp_ble_mesh_bd_addr_t **addr**

Device address of the Proxy Server

esp_ble_mesh_addr_type_t **addr_type**

Device address type

uint16_t **net_idx**

Corresponding NetKey Index

struct **ble_mesh_proxy_client_connected_param**

#include <esp_ble_mesh_defs.h> ESP_BLE_MESH_PROXY_CLIENT_CONNECTED_EVT.

Public Members

esp_ble_mesh_bd_addr_t **addr**

Device address of the Proxy Server

esp_ble_mesh_addr_type_t **addr_type**

Device address type

uint8_t **conn_handle**

Proxy connection handle

uint16_t **net_idx**

Corresponding NetKey Index

struct **ble_mesh_proxy_client_disconnect_comp_param**

#include <esp_ble_mesh_defs.h> ESP_BLE_MESH_PROXY_CLIENT_DISCONNECT_COMP_EVT.

Public Members

int **err_code**

Indicate the result of Proxy Client disconnect

uint8_t **conn_handle**

Proxy connection handle

struct **ble_mesh_proxy_client_disconnected_param**

#include <esp_ble_mesh_defs.h> ESP_BLE_MESH_PROXY_CLIENT_DISCONNECTED_EVT.

Public Members

esp_ble_mesh_bd_addr_t **addr**

Device address of the Proxy Server

esp_ble_mesh_addr_type_t **addr_type**

Device address type

uint8_t **conn_handle**

Proxy connection handle

uint16_t **net_idx**

Corresponding NetKey Index

uint8_t **reason**

Proxy disconnect reason

struct **ble_mesh_proxy_client_recv_adv_pkt_param**

#include <esp_ble_mesh_defs.h> ESP_BLE_MESH_PROXY_CLIENT_RECV_ADV_PKT_EVT.

Public Members

esp_ble_mesh_bd_addr_t **addr**

Device address

esp_ble_mesh_addr_type_t **addr_type**

Device address type

uint16_t **net_idx**

Network ID related NetKey Index

uint8_t **net_id**[8]

Network ID contained in the advertising packet

int8_t **rssi**

RSSI of the received advertising packet

struct **ble_mesh_proxy_client_recv_filter_status_param**

#include <esp_ble_mesh_defs.h> ESP_BLE_MESH_PROXY_CLIENT_RECV_FILTER_STATUS_EVT.

Public Members

uint8_t **conn_handle**

Proxy connection handle

uint16_t **server_addr**

Proxy Server primary element address

uint16_t **net_idx**

Corresponding NetKey Index

uint8_t **filter_type**

Proxy Server filter type(whitelist or blacklist)

uint16_t **list_size**

Number of addresses in the Proxy Server filter list

struct **ble_mesh_proxy_client_remove_filter_addr_comp_param**

#include <esp_ble_mesh_defs.h> ESP_BLE_MESH_PROXY_CLIENT_REMOVE_FILTER_ADDR_COMP_EVT.

Public Members

int **err_code**

Indicate the result of Proxy Client remove filter address

uint8_t **conn_handle**

Proxy connection handle

uint16_t **net_idx**

Corresponding NetKey Index

struct **ble_mesh_proxy_client_set_filter_type_comp_param**

#include <esp_ble_mesh_defs.h> ESP_BLE_MESH_PROXY_CLIENT_SET_FILTER_TYPE_COMP_EVT.

Public Members

int **err_code**

Indicate the result of Proxy Client set filter type

uint8_t **conn_handle**

Proxy connection handle

uint16_t **net_idx**

Corresponding NetKey Index

struct **ble_mesh_proxy_gatt_disable_comp_param**

#include <esp_ble_mesh_defs.h> ESP_BLE_MESH_NODE_PROXY_GATT_DISABLE_COMP_EVT.

Public Members

int **err_code**

Indicate the result of disabling Mesh Proxy Service

struct **ble_mesh_proxy_gatt_enable_comp_param**

#include <esp_ble_mesh_defs.h> ESP_BLE_MESH_NODE_PROXY_GATT_ENABLE_COMP_EVT.

Public Members

int **err_code**

Indicate the result of enabling Mesh Proxy Service

struct **ble_mesh_proxy_identity_enable_comp_param**

#include <esp_ble_mesh_defs.h> ESP_BLE_MESH_NODE_PROXY_IDENTITY_ENABLE_COMP_EVT.

Public Members

int **err_code**

Indicate the result of enabling Mesh Proxy advertising

struct **ble_mesh_proxy_server_connected_param**

#include <esp_ble_mesh_defs.h> ESP_BLE_MESH_PROXY_SERVER_CONNECTED_EVT.

Public Members

uint8_t **conn_handle**

Proxy connection handle

struct **ble_mesh_proxy_server_disconnected_param**

#include <esp_ble_mesh_defs.h> ESP_BLE_MESH_PROXY_SERVER_DISCONNECTED_EVT.

Public Members

uint8_t **conn_handle**

Proxy connection handle

uint8_t **reason**

Proxy disconnect reason

struct **ble_mesh_set_fast_prov_action_comp_param**

#include <esp_ble_mesh_defs.h> ESP_BLE_MESH_SET_FAST_PROV_ACTION_COMP_EVT.

Public Members

uint8_t **status_action**

Indicate the result of setting action of fast provisioning

struct **ble_mesh_set_fast_prov_info_comp_param**

#include <esp_ble_mesh_defs.h> ESP_BLE_MESH_SET_FAST_PROV_INFO_COMP_EVT.

Public Members

uint8_t **status_unicast**

Indicate the result of setting unicast address range of fast provisioning

uint8_t **status_net_idx**

Indicate the result of setting NetKey Index of fast provisioning

uint8_t **status_match**

Indicate the result of setting matching Device UUID of fast provisioning

struct **ble_mesh_set_oob_pub_key_comp_param**

#include <esp_ble_mesh_defs.h> ESP_BLE_MESH_NODE_PROV_SET_OOB_PUB_KEY_COMP_EVT.

Public Members

int **err_code**

Indicate the result of setting OOB Public Key

struct **ble_mesh_set_unprov_dev_name_comp_param**

#include <esp_ble_mesh_defs.h> ESP_BLE_MESH_NODE_SET_UNPROV_DEV_NAME_COMP_EVT.

Public Members

int **err_code**

Indicate the result of setting BLE Mesh device name

union **esp_ble_mesh_server_state_value_t**

#include <esp_ble_mesh_defs.h> Server model state value union.

Public Members

uint8_t **onoff**

The value of the Generic OnOff state

The value of the Light LC Light OnOff state

struct *esp_ble_mesh_server_state_value_t*::[anonymous] **gen_onoff**

The Generic OnOff state

int16_t **level**

The value of the Generic Level state

struct *esp_ble_mesh_server_state_value_t*::[anonymous] **gen_level**

The Generic Level state

uint8_t **onpowerup**

The value of the Generic OnPowerUp state

struct *esp_ble_mesh_server_state_value_t*::[anonymous] **gen_onpowerup**

The Generic OnPowerUp state

uint16_t **power**

The value of the Generic Power Actual state

struct *esp_ble_mesh_server_state_value_t*::[anonymous] **gen_power_actual**

The Generic Power Actual state

uint16_t **lightness**

The value of the Light Lightness Actual state

The value of the Light Lightness Linear state

The value of the Light CTL Lightness state

The value of the Light HSL Lightness state

The value of the Light xyL Lightness state

struct *esp_ble_mesh_server_state_value_t*::[anonymous] **light_lightness_actual**

The Light Lightness Actual state

struct *esp_ble_mesh_server_state_value_t*::[anonymous] **light_lightness_linear**

The Light Lightness Linear state

struct *esp_ble_mesh_server_state_value_t*::[anonymous] **light_ctl_lightness**

The Light CTL Lightness state

uint16_t **temperature**

The value of the Light CTL Temperature state

int16_t **delta_uv**

The value of the Light CTL Delta UV state

struct *esp_ble_mesh_server_state_value_t*::[anonymous] **light_ctl_temp_delta_uv**

The Light CTL Temperature & Delta UV states

uint16_t **hue**

The value of the Light HSL Hue state

uint16_t **saturation**

The value of the Light HSL Saturation state

struct *esp_ble_mesh_server_state_value_t*::[anonymous] **light_hsl**

The Light HSL composite state

struct *esp_ble_mesh_server_state_value_t*::[anonymous] **light_hsl_lightness**

The Light HSL Lightness state

struct *esp_ble_mesh_server_state_value_t*::[anonymous] **light_hsl_hue**

The Light HSL Hue state

struct *esp_ble_mesh_server_state_value_t*::[anonymous] **light_hsl_saturation**

The Light HSL Saturation state

struct *esp_ble_mesh_server_state_value_t*::[anonymous] **light_xyl_lightness**

The Light xyL Lightness state

struct *esp_ble_mesh_server_state_value_t*::[anonymous] **light_lc_light_onoff**

The Light LC Light OnOff state

union **esp_ble_mesh_model_cb_param_t**

#include <esp_ble_mesh_defs.h> BLE Mesh model callback parameters union.

Public Members

struct *esp_ble_mesh_model_cb_param_t*::*ble_mesh_model_operation_evt_param* **model_operation**

Event parameter of ESP_BLE_MESH_MODEL_OPERATION_EVT

struct *esp_ble_mesh_model_cb_param_t*::*ble_mesh_model_send_comp_param* **model_send_comp**

Event parameter of ESP_BLE_MESH_MODEL_SEND_COMP_EVT

struct *esp_ble_mesh_model_cb_param_t*::*ble_mesh_model_publish_comp_param* **model_publish_comp**

Event parameter of ESP_BLE_MESH_MODEL_PUBLISH_COMP_EVT

struct *esp_ble_mesh_model_cb_param_t*::*ble_mesh_mod_recv_publish_msg_param* **client_recv_publish_msg**

Event parameter of ESP_BLE_MESH_CLIENT_MODEL_RECV_PUBLISH_MSG_EVT

struct *esp_ble_mesh_model_cb_param_t*::*ble_mesh_client_model_send_timeout_param* **client_send_timeout**

Event parameter of ESP_BLE_MESH_CLIENT_MODEL_SEND_TIMEOUT_EVT

struct *esp_ble_mesh_model_cb_param_t*::*ble_mesh_model_publish_update_evt_param* **model_publish_update**

Event parameter of ESP_BLE_MESH_MODEL_PUBLISH_UPDATE_EVT

struct *esp_ble_mesh_model_cb_param_t*::*ble_mesh_server_model_update_state_comp_param* **server_model_update_state**

Event parameter of ESP_BLE_MESH_SERVER_MODEL_UPDATE_STATE_COMP_EVT

struct **ble_mesh_client_model_send_timeout_param**

#include <esp_ble_mesh_defs.h> ESP_BLE_MESH_CLIENT_MODEL_SEND_TIMEOUT_EVT.

Public Members

uint32_t **opcode**

Opcode of the previously sent message

esp_ble_mesh_model_t ***model**

Pointer to the model which sends the previous message

esp_ble_mesh_msg_ctx_t ***ctx**

Pointer to the context of the previous message

struct **ble_mesh_mod_recv_publish_msg_param**

#include <esp_ble_mesh_defs.h> ESP_BLE_MESH_CLIENT_MODEL_RECV_PUBLISH_MSG_EVT.

Public Members

uint32_t **opcode**

Opcode of the unsolicited received message

esp_ble_mesh_model_t ***model**

Pointer to the model which receives the message

esp_ble_mesh_msg_ctx_t ***ctx**

Pointer to the context of the message

uint16_t **length**

Length of the received message

uint8_t ***msg**

Value of the received message

struct **ble_mesh_model_operation_evt_param**

#include <esp_ble_mesh_defs.h> ESP_BLE_MESH_MODEL_OPERATION_EVT.

Public Members

uint32_t **opcode**

Opcode of the received message

esp_ble_mesh_model_t ***model**

Pointer to the model which receives the message

esp_ble_mesh_msg_ctx_t ***ctx**

Pointer to the context of the received message

uint16_t **length**

Length of the received message

uint8_t ***msg**

Value of the received message

struct **ble_mesh_model_publish_comp_param**

#include <esp_ble_mesh_defs.h> ESP_BLE_MESH_MODEL_PUBLISH_COMP_EVT.

Public Members

int **err_code**

Indicate the result of publishing a message

esp_ble_mesh_model_t ***model**

Pointer to the model which publishes the message

struct **ble_mesh_model_publish_update_evt_param**

#include <esp_ble_mesh_defs.h> ESP_BLE_MESH_MODEL_PUBLISH_UPDATE_EVT.

Public Members

esp_ble_mesh_model_t ***model**

Pointer to the model which is going to update its publish message

struct **ble_mesh_model_send_comp_param**

#include <esp_ble_mesh_defs.h> ESP_BLE_MESH_MODEL_SEND_COMP_EVT.

Public Members

int **err_code**

Indicate the result of sending a message

uint32_t **opcode**

Opcode of the message

esp_ble_mesh_model_t ***model**

Pointer to the model which sends the message

esp_ble_mesh_msg_ctx_t ***ctx**

Context of the message

struct **ble_mesh_server_model_update_state_comp_param**

#include <esp_ble_mesh_defs.h> ESP_BLE_MESH_SERVER_MODEL_UPDATE_STATE_COMP_EVT.

Public Members

int **err_code**

Indicate the result of updating server model state

esp_ble_mesh_model_t ***model**

Pointer to the server model which state value is updated

esp_ble_mesh_server_state_type_t **type**

Type of the updated server state

Structures

struct **esp_ble_mesh_deinit_param_t**

BLE Mesh deinit parameters

Public Members

bool **erase_flash**

Indicate if erasing flash when deinit mesh stack

struct **esp_ble_mesh_elem_t**

Abstraction that describes a BLE Mesh Element. This structure is associated with struct bt_mesh_elem in mesh_access.h

Public Members

uint16_t **element_addr**

Element Address, assigned during provisioning.

const uint16_t **location**

Location Descriptor (GATT Bluetooth Namespace Descriptors)

const uint8_t **sig_model_count**

SIG Model count

const uint8_t **vnd_model_count**

Vendor Model count

esp_ble_mesh_model_t ***sig_models**

SIG Models

esp_ble_mesh_model_t ***vnd_models**

Vendor Models

struct **esp_ble_mesh_model_pub_t**

Abstraction that describes a model publication context. This structure is associated with struct bt_mesh_model_pub in mesh_access.h

Public Members

esp_ble_mesh_model_t ***model**

Pointer to the model to which the context belongs. Initialized by the stack.

uint16_t **publish_addr**

Publish Address.

uint16_t **app_idx**

Publish AppKey Index.

uint16_t **cred**

Friendship Credentials Flag.

uint16_t **send_rel**

Force reliable sending (segment acks)

uint8_t **ttl**

Publish Time to Live.

uint8_t **retransmit**

Retransmit Count & Interval Steps.

uint8_t **period**

Publish Period.

uint8_t **period_div**

Divisor for the Period.

uint8_t **fast_period**

Use FastPeriodDivisor

uint8_t **count**

Retransmissions left.

uint32_t **period_start**

Start of the current period.

struct net_buf_simple ***msg**

Publication buffer, containing the publication message.

This will get correctly created when the publication context has been defined using the ESP_BLE_MESH_MODEL_PUB_DEFINE macro.

ESP_BLE_MESH_MODEL_PUB_DEFINE(name, size);

esp_ble_mesh_cb_t **update**

Callback used to update publish message. Initialized by the stack.

struct k_delayed_work **timer**

Publish Period Timer. Initialized by the stack.

uint8_t **dev_role**

Role of the device that is going to publish messages

struct **esp_ble_mesh_model_op_t**

Abstraction that describes a model operation context. This structure is associated with struct bt_mesh_model_op in mesh_access.h

Public Members

const uint32_t **opcode**

Message opcode

const size_t **min_len**

Message minimum length

esp_ble_mesh_cb_t **param_cb**

Callback used to handle message. Initialized by the stack.

struct **esp_ble_mesh_model_cbs_t**

Abstraction that describes a model callback structure. This structure is associated with struct bt_mesh_model_cb in mesh_access.h.

Public Members

esp_ble_mesh_cb_t **init_cb**

Callback used during model initialization. Initialized by the stack.

struct **esp_ble_mesh_model**

Abstraction that describes a Mesh Model instance. This structure is associated with struct bt_mesh_model in mesh_access.h

Public Members

const uint16_t **model_id**

16-bit model identifier

uint16_t **company_id**

16-bit company identifier

uint16_t **model_id**

16-bit model identifier

struct *esp_ble_mesh_model*::[anonymous]::[anonymous] **vnd**

Structure encapsulating a model ID with a company ID

union *esp_ble_mesh_model*::[anonymous] **[anonymous]**

Model ID

uint8_t **element_idx**

Internal information, mainly for persistent storage Belongs to Nth element

uint8_t **model_idx**

Is the Nth model in the element

uint16_t **flags**

Information about what has changed

esp_ble_mesh_elem_t ***element**

The Element to which this Model belongs

esp_ble_mesh_model_pub_t *const **pub**

Model Publication

uint16_t **keys**[CONFIG_BLE_MESH_MODEL_KEY_COUNT]

AppKey List

uint16_t **groups**[CONFIG_BLE_MESH_MODEL_GROUP_COUNT]

Subscription List (group or virtual addresses)

esp_ble_mesh_model_op_t ***op**

Model operation context

esp_ble_mesh_model_cbs_t ***cb**

Model callback structure

void ***user_data**

Model-specific user data

struct **esp_ble_mesh_msg_ctx_t**

Message sending context. This structure is associated with struct bt_mesh_msg_ctx in mesh_access.h

Public Members

uint16_t **net_idx**

NetKey Index of the subnet through which to send the message.

uint16_t **app_idx**

AppKey Index for message encryption.

uint16_t **addr**

Remote address.

uint16_t **recv_dst**

Destination address of a received message. Not used for sending.

int8_t **recv_rssi**

RSSI of received packet. Not used for sending.

uint8_t **recv_ttl**

Received TTL value. Not used for sending.

uint8_t **send_rel**

Force sending reliably by using segment acknowledgement

uint8_t **send_ttl**

TTL, or ESP_BLE_MESH_TTL_DEFAULT for default TTL.

uint32_t **recv_op**

Opcode of a received message. Not used for sending message.

esp_ble_mesh_model_t ***model**

Model corresponding to the message, no need to be initialized before sending message

bool **srv_send**

Indicate if the message is sent by a node server model, no need to be initialized before sending message

struct **esp_ble_mesh_prov_t**

Provisioning properties & capabilities. This structure is associated with struct bt_mesh_prov in mesh_access.h

struct **esp_ble_mesh_comp_t**

Node Composition data context. This structure is associated with struct bt_mesh_comp in mesh_access.h

Public Members

uint16_t **cid**

16-bit SIG-assigned company identifier

uint16_t **pid**

16-bit vendor-assigned product identifier

uint16_t **vid**

16-bit vendor-assigned product version identifier

size_t **element_count**

Element count

esp_ble_mesh_elem_t ***elements**

A sequence of elements

struct **esp_ble_mesh_unprov_dev_add_t**

Information of the device which is going to be added for provisioning.

Public Members

esp_ble_mesh_bd_addr_t **addr**

Device address

esp_ble_mesh_addr_type_t **addr_type**

Device address type

uint8_t **uuid**[16]

Device UUID

uint16_t **oob_info**

Device OOB Info ADD_DEV_START_PROV_NOW_FLAG shall not be set if the bearer has both PB-ADV and PB-GATT enabled

esp_ble_mesh_prov_bearer_t **bearer**

Provisioning Bearer

struct **esp_ble_mesh_device_delete_t**

Information of the device which is going to be deleted.

Public Members

esp_ble_mesh_bd_addr_t **addr**

Device address

esp_ble_mesh_addr_type_t **addr_type**

Device address type

uint8_t **uuid**[16]

Device UUID

uint8_t **flag**

BIT0: device address; BIT1: device UUID

struct **esp_ble_mesh_prov_data_info_t**

Information of the provisioner which is going to be updated.

Public Members

uint16_t **net_idx**

NetKey Index

uint8_t **flags**

Flags

uint32_t **iv_index**

IV Index

uint8_t **flag**

BIT0: net_idx; BIT1: flags; BIT2: iv_index

struct **esp_ble_mesh_node_t**

Information of the provisioned node

Public Members

esp_ble_mesh_bd_addr_t **addr**

Node device address

esp_ble_mesh_addr_type_t **addr_type**

Node device address type

uint8_t **dev_uuid**[16]

Device UUID

uint16_t **oob_info**

Node OOB information

uint16_t **unicast_addr**

Node unicast address

uint8_t **element_num**

Node element number

uint16_t **net_idx**

Node NetKey Index

uint8_t **flags**

Node key refresh flag and iv update flag

uint32_t **iv_index**

Node IV Index

uint8_t **dev_key**[16]

Node device key

char **name**[31 + 1]

Node name

uint16_t **comp_length**

Length of Composition Data

uint8_t ***comp_data**

Value of Composition Data

struct **esp_ble_mesh_fast_prov_info_t**

Context of fast provisioning which need to be set.

Public Members

uint16_t **unicast_min**

Minimum unicast address used for fast provisioning

uint16_t **unicast_max**

Maximum unicast address used for fast provisioning

uint16_t **net_idx**

Netkey index used for fast provisioning

uint8_t **flags**

Flags used for fast provisioning

uint32_t **iv_index**

IV Index used for fast provisioning

uint8_t **offset**

Offset of the UUID to be compared

uint8_t **match_len**

Length of the UUID to be compared

uint8_t **match_val**[16]

Value of UUID to be compared

struct **esp_ble_mesh_heartbeat_filter_info_t**

Context of Provisioner heartbeat filter information to be set

Public Members

uint16_t **hb_src**

Heartbeat source address (unicast address)

uint16_t **hb_dst**

Heartbeat destination address (unicast address or group address)

struct **esp_ble_mesh_client_op_pair_t**

BLE Mesh client models related definitions.

Client model Get/Set message opcode and corresponding Status message opcode

Public Members

uint32_t **cli_op**

The client message opcode

uint32_t **status_op**

The server status opcode corresponding to the client message opcode

struct **esp_ble_mesh_client_t**

Client Model user data context.

Public Members

esp_ble_mesh_model_t ***model**

Pointer to the client model. Initialized by the stack.

int **op_pair_size**

Size of the op_pair

const *esp_ble_mesh_client_op_pair_t* ***op_pair**

Table containing get/set message opcode and corresponding status message opcode

uint32_t **publish_status**

Callback used to handle the received unsolicited message. Initialized by the stack.

void ***internal_data**

Pointer to the internal data of client model

uint8_t **msg_role**

Role of the device (Node/Provisioner) that is going to send messages

struct **esp_ble_mesh_client_common_param_t**

Common parameters of the messages sent by Client Model.

Public Members

esp_ble_mesh_opcode_t **opcode**

Message opcode

esp_ble_mesh_model_t ***model**

Pointer to the client model structure

esp_ble_mesh_msg_ctx_t **ctx**

The context used to send message

int32_t **msg_timeout**

Timeout value (ms) to get response to the sent message Note: if using default timeout value in menuconfig, make sure to set this value to 0

uint8_t **msg_role**

Role of the device - Node/Provisioner

struct **esp_ble_mesh_state_transition_t**

Parameters of the server model state transition

Public Functions

BLE_MESH_ATOMIC_DEFINE(flag, *ESP_BLE_MESH_SERVER_FLAG_MAX*)

Flag used to indicate if the transition timer has been started internally.

If the model which contains *esp_ble_mesh_state_transition_t* sets "set_auto_rsp" to ESP_BLE_MESH_SERVER_RSP_BY_APP, the handler of the timer shall be initialized by the users.

And users can use this flag to indicate whether the timer is started or not.

Public Members

bool **just_started**

Indicate if the state transition has just started

uint8_t **trans_time**

State transition time

uint8_t **remain_time**

Remaining time of state transition

uint8_t **delay**

Delay before starting state transition

uint32_t **quo_tt**

Duration of each divided transition step

uint32_t **counter**

Number of steps which the transition duration is divided

uint32_t **total_duration**

State transition total duration

int64_t **start_timestamp**

Time when the state transition is started

struct k_delayed_work **timer**

Timer used for state transition

struct **esp_ble_mesh_last_msg_info_t**

Parameters of the server model received last same set message.

Public Members

uint8_t **tid**

Transaction number of the last message

uint16_t **src**

Source address of the last message

uint16_t **dst**

Destination address of the last message

int64_t **timestamp**

Time when the last message is received

struct **esp_ble_mesh_server_rsp_ctrl_t**

Parameters of the Server Model response control

Public Members

uint8_t **get_auto_rsp**

BLE Mesh Server Response Option.

i. If get_auto_rsp is set to ESP_BLE_MESH_SERVER_RSP_BY_APP, then the response of Client Get messages need to be replied by the application;
ii. If get_auto_rsp is set to ESP_BLE_MESH_SERVER_AUTO_RSP, then the response of Client Get messages will be replied by the server models;
iii. If set_auto_rsp is set to ESP_BLE_MESH_SERVER_RSP_BY_APP, then the response of Client Set messages need to be replied by the application;
iv. If set_auto_rsp is set to ESP_BLE_MESH_SERVER_AUTO_RSP, then the response of Client Set messages will be replied by the server models;
v. If status_auto_rsp is set to ESP_BLE_MESH_SERVER_RSP_BY_APP, then the response of Server Status messages need to be replied by the application;
vi. If status_auto_rsp is set to ESP_BLE_MESH_SERVER_AUTO_RSP, then the response of Server Status messages will be replied by the server models;Response control for Client Get messages

uint8_t **set_auto_rsp**

Response control for Client Set messages

uint8_t **status_auto_rsp**

Response control for Server Status messages

Macros

ESP_BLE_MESH_SDU_MAX_LEN

< The maximum length of a BLE Mesh message, including Opcode, Payload and TransMIC Length of a short Mesh MIC.

ESP_BLE_MESH_MIC_SHORT

Length of a long Mesh MIC.

ESP_BLE_MESH_MIC_LONG

The maximum length of a BLE Mesh provisioned node name

ESP_BLE_MESH_NODE_NAME_MAX_LEN

The maximum length of a BLE Mesh unprovisioned device name

ESP_BLE_MESH_DEVICE_NAME_MAX_LEN

The maximum length of settings user id

ESP_BLE_MESH_SETTINGS_UID_SIZE

Invalid settings index

ESP_BLE_MESH_INVALID_SETTINGS_IDX

Define the BLE Mesh octet 16 bytes size

ESP_BLE_MESH_OCTET16_LEN

ESP_BLE_MESH_OCTET8_LEN

ESP_BLE_MESH_CID_NVAL

Special TTL value to request using configured default TTL

ESP_BLE_MESH_TTL_DEFAULT

Maximum allowed TTL value

ESP_BLE_MESH_TTL_MAX

ESP_BLE_MESH_ADDR_UNASSIGNED

ESP_BLE_MESH_ADDR_ALL_NODES

ESP_BLE_MESH_ADDR_PROXIES

ESP_BLE_MESH_ADDR_FRIENDS

ESP_BLE_MESH_ADDR_RELAYS

ESP_BLE_MESH_KEY_UNUSED

ESP_BLE_MESH_KEY_DEV

ESP_BLE_MESH_KEY_PRIMARY

ESP_BLE_MESH_KEY_ANY

Primary Network Key index

ESP_BLE_MESH_NET_PRIMARY

Relay state value

ESP_BLE_MESH_RELAY_DISABLED

ESP_BLE_MESH_RELAY_ENABLED

ESP_BLE_MESH_RELAY_NOT_SUPPORTED

Beacon state value

ESP_BLE_MESH_BEACON_DISABLED

ESP_BLE_MESH_BEACON_ENABLED

GATT Proxy state value

ESP_BLE_MESH_GATT_PROXY_DISABLED

ESP_BLE_MESH_GATT_PROXY_ENABLED

ESP_BLE_MESH_GATT_PROXY_NOT_SUPPORTED

Friend state value

ESP_BLE_MESH_FRIEND_DISABLED

ESP_BLE_MESH_FRIEND_ENABLED

ESP_BLE_MESH_FRIEND_NOT_SUPPORTED

Node identity state value

ESP_BLE_MESH_NODE_IDENTITY_STOPPED

ESP_BLE_MESH_NODE_IDENTITY_RUNNING

ESP_BLE_MESH_NODE_IDENTITY_NOT_SUPPORTED

Supported features

ESP_BLE_MESH_FEATURE_RELAY

ESP_BLE_MESH_FEATURE_PROXY

ESP_BLE_MESH_FEATURE_FRIEND

ESP_BLE_MESH_FEATURE_LOW_POWER

ESP_BLE_MESH_FEATURE_ALL_SUPPORTED

ESP_BLE_MESH_ADDR_IS_UNICAST(addr)

ESP_BLE_MESH_ADDR_IS_GROUP(addr)

ESP_BLE_MESH_ADDR_IS_VIRTUAL(addr)

ESP_BLE_MESH_ADDR_IS_RFU(addr)

ESP_BLE_MESH_INVALID_NODE_INDEX

ESP_BLE_MESH_TRANSMIT(count, int_ms)

Encode transmission count & interval steps.

Note: For example, ESP_BLE_MESH_TRANSMIT(2, 20) means that the message will be sent about 90ms(count is 3, step is 1, interval is 30 ms which includes 10ms of advertising interval random delay).

Parameters

- **count** –Number of retransmissions (first transmission is excluded).
- **int_ms** –Interval steps in milliseconds. Must be greater than 0 and a multiple of 10.

Returns BLE Mesh transmit value that can be used e.g. for the default values of the Configuration Model data.

ESP_BLE_MESH_GET_TRANSMIT_COUNT(transmit)

Decode transmit count from a transmit value.

Parameters

- **transmit** –Encoded transmit count & interval value.

Returns Transmission count (actual transmissions equal to N + 1).

ESP_BLE_MESH_GET_TRANSMIT_INTERVAL(transmit)

Decode transmit interval from a transmit value.

Parameters

- **transmit** –Encoded transmit count & interval value.

Returns Transmission interval in milliseconds.

ESP_BLE_MESH_PUBLISH_TRANSMIT(count, int_ms)

Encode Publish Retransmit count & interval steps.

Parameters

- **count** –Number of retransmissions (first transmission is excluded).
- **int_ms** –Interval steps in milliseconds. Must be greater than 0 and a multiple of 50.

Returns BLE Mesh transmit value that can be used e.g. for the default values of the Configuration Model data.

ESP_BLE_MESH_GET_PUBLISH_TRANSMIT_COUNT(transmit)

Decode Publish Retransmit count from a given value.

Parameters

- **transmit** –Encoded Publish Retransmit count & interval value.

Returns Retransmission count (actual transmissions equal to N + 1).

ESP_BLE_MESH_GET_PUBLISH_TRANSMIT_INTERVAL(transmit)

Decode Publish Retransmit interval from a given value.

Callbacks which are not needed to be initialized by users (set with 0 and will be initialized internally)

Parameters

- **transmit** –Encoded Publish Retransmit count & interval value.

Returns Transmission interval in milliseconds.

ESP_BLE_MESH_PROV_STATIC_OOB_MAX_LEN

Maximum length of string used by Output OOB authentication

ESP_BLE_MESH_PROV_OUTPUT_OOB_MAX_LEN

Maximum length of string used by Output OOB authentication

ESP_BLE_MESH_PROV_INPUT_OOB_MAX_LEN

Macros used to define message opcode

ESP_BLE_MESH_MODEL_OP_1(b0)

ESP_BLE_MESH_MODEL_OP_2(b0, b1)

ESP_BLE_MESH_MODEL_OP_3(b0, cid)

This macro is associated with BLE_MESH_MODEL_CB in mesh_access.h

ESP_BLE_MESH_SIG_MODEL(_id, _op, _pub, _user_data)

This macro is associated with BLE_MESH_MODEL_VND_CB in mesh_access.h

ESP_BLE_MESH_VENDOR_MODEL(_company, _id, _op, _pub, _user_data)

ESP_BLE_MESH_ELEMENT(_loc, _mods, _vnd_mods)

Helper to define a BLE Mesh element within an array.

In case the element has no SIG or Vendor models, the helper macro ESP_BLE_MESH_MODEL_NONE can be given instead.

Note: This macro is associated with BLE_MESH_ELEM in mesh_access.h

---

Parameters

- **_loc** –Location Descriptor.
- **_mods** –Array of SIG models.
- **_vnd_mods** –Array of vendor models.

ESP_BLE_MESH_PROV(uuid, sta_val, sta_val_len, out_size, out_act, in_size, in_act)

BT_OCTET32_LEN

BD_ADDR_LEN

ESP_BLE_MESH_ADDR_TYPE_PUBLIC

ESP_BLE_MESH_ADDR_TYPE_RANDOM

ESP_BLE_MESH_ADDR_TYPE_RPA_PUBLIC

ESP_BLE_MESH_ADDR_TYPE_RPA_RANDOM

ESP_BLE_MESH_MODEL_PUB_DEFINE(_name, _msg_len, _role)

Define a model publication context.

Parameters

- **_name** –Variable name given to the context.
- **_msg_len** –Length of the publication message.
- **_role** –Role of the device which contains the model.

ESP_BLE_MESH_MODEL_OP(_opcode, _min_len)

Define a model operation context.

Parameters

- **_opcode** –Message opcode.
- **_min_len** –Message minimum length.

ESP_BLE_MESH_MODEL_OP_END

Define the terminator for the model operation table. Each model operation struct array must use this terminator as the end tag of the operation unit.

ESP_BLE_MESH_MODEL_NONE

Helper to define an empty model array. This structure is associated with BLE_MESH_MODEL_NONE in mesh_access.h

ADD_DEV_RM_AFTER_PROV_FLAG

Device will be removed from queue after provisioned successfully

ADD_DEV_START_PROV_NOW_FLAG

Start provisioning device immediately

ADD_DEV_FLUSHABLE_DEV_FLAG

Device can be remove when queue is full and new device is going to added

DEL_DEV_ADDR_FLAG

DEL_DEV_UUID_FLAG

PROV_DATA_NET_IDX_FLAG

PROV_DATA_FLAGS_FLAG

PROV_DATA_IV_INDEX_FLAG

ESP_BLE_MESH_HEARTBEAT_FILTER_ACCEPTLIST

ESP_BLE_MESH_HEARTBEAT_FILTER_REJECTLIST

Provisioner heartbeat filter operation

ESP_BLE_MESH_HEARTBEAT_FILTER_ADD

ESP_BLE_MESH_HEARTBEAT_FILTER_REMOVE

ESP_BLE_MESH_MODEL_ID_CONFIG_SRV

BLE Mesh models related Model ID and Opcode definitions.

< Foundation Models

ESP_BLE_MESH_MODEL_ID_CONFIG_CLI

ESP_BLE_MESH_MODEL_ID_HEALTH_SRV

ESP_BLE_MESH_MODEL_ID_HEALTH_CLI

Models from the Mesh Model Specification

ESP_BLE_MESH_MODEL_ID_GEN_ONOFF_SRV

ESP_BLE_MESH_MODEL_ID_GEN_ONOFF_CLI

ESP_BLE_MESH_MODEL_ID_GEN_LEVEL_SRV

ESP_BLE_MESH_MODEL_ID_GEN_LEVEL_CLI

ESP_BLE_MESH_MODEL_ID_GEN_DEF_TRANS_TIME_SRV

ESP_BLE_MESH_MODEL_ID_GEN_DEF_TRANS_TIME_CLI

ESP_BLE_MESH_MODEL_ID_GEN_POWER_ONOFF_SRV

ESP_BLE_MESH_MODEL_ID_GEN_POWER_ONOFF_SETUP_SRV

ESP_BLE_MESH_MODEL_ID_GEN_POWER_ONOFF_CLI

ESP_BLE_MESH_MODEL_ID_GEN_POWER_LEVEL_SRV

ESP_BLE_MESH_MODEL_ID_GEN_POWER_LEVEL_SETUP_SRV

ESP_BLE_MESH_MODEL_ID_GEN_POWER_LEVEL_CLI

ESP_BLE_MESH_MODEL_ID_GEN_BATTERY_SRV

ESP_BLE_MESH_MODEL_ID_GEN_BATTERY_CLI

ESP_BLE_MESH_MODEL_ID_GEN_LOCATION_SRV

ESP_BLE_MESH_MODEL_ID_GEN_LOCATION_SETUP_SRV

ESP_BLE_MESH_MODEL_ID_GEN_LOCATION_CLI

ESP_BLE_MESH_MODEL_ID_GEN_ADMIN_PROP_SRV

ESP_BLE_MESH_MODEL_ID_GEN_MANUFACTURER_PROP_SRV

ESP_BLE_MESH_MODEL_ID_GEN_USER_PROP_SRV

ESP_BLE_MESH_MODEL_ID_GEN_CLIENT_PROP_SRV

ESP_BLE_MESH_MODEL_ID_GEN_PROP_CLI

ESP_BLE_MESH_MODEL_ID_SENSOR_SRV

ESP_BLE_MESH_MODEL_ID_SENSOR_SETUP_SRV

ESP_BLE_MESH_MODEL_ID_SENSOR_CLI

ESP_BLE_MESH_MODEL_ID_TIME_SRV

ESP_BLE_MESH_MODEL_ID_TIME_SETUP_SRV

ESP_BLE_MESH_MODEL_ID_TIME_CLI

ESP_BLE_MESH_MODEL_ID_SCENE_SRV

ESP_BLE_MESH_MODEL_ID_SCENE_SETUP_SRV

ESP_BLE_MESH_MODEL_ID_SCENE_CLI

ESP_BLE_MESH_MODEL_ID_SCHEDULER_SRV

ESP_BLE_MESH_MODEL_ID_SCHEDULER_SETUP_SRV

ESP_BLE_MESH_MODEL_ID_SCHEDULER_CLI

ESP_BLE_MESH_MODEL_ID_LIGHT_LIGHTNESS_SRV

ESP_BLE_MESH_MODEL_ID_LIGHT_LIGHTNESS_SETUP_SRV

ESP_BLE_MESH_MODEL_ID_LIGHT_LIGHTNESS_CLI

ESP_BLE_MESH_MODEL_ID_LIGHT_CTL_SRV

ESP_BLE_MESH_MODEL_ID_LIGHT_CTL_SETUP_SRV

ESP_BLE_MESH_MODEL_ID_LIGHT_CTL_CLI

ESP_BLE_MESH_MODEL_ID_LIGHT_CTL_TEMP_SRV

ESP_BLE_MESH_MODEL_ID_LIGHT_HSL_SRV

ESP_BLE_MESH_MODEL_ID_LIGHT_HSL_SETUP_SRV

ESP_BLE_MESH_MODEL_ID_LIGHT_HSL_CLI

ESP_BLE_MESH_MODEL_ID_LIGHT_HSL_HUE_SRV

ESP_BLE_MESH_MODEL_ID_LIGHT_HSL_SAT_SRV

ESP_BLE_MESH_MODEL_ID_LIGHT_XYL_SRV

ESP_BLE_MESH_MODEL_ID_LIGHT_XYL_SETUP_SRV

ESP_BLE_MESH_MODEL_ID_LIGHT_XYL_CLI

ESP_BLE_MESH_MODEL_ID_LIGHT_LC_SRV

ESP_BLE_MESH_MODEL_ID_LIGHT_LC_SETUP_SRV

ESP_BLE_MESH_MODEL_ID_LIGHT_LC_CLI

ESP_BLE_MESH_MODEL_OP_BEACON_GET
Config Beacon Get

ESP_BLE_MESH_MODEL_OP_COMPOSITION_DATA_GET
Config Composition Data Get

ESP_BLE_MESH_MODEL_OP_DEFAULT_TTL_GET
Config Default TTL Get

ESP_BLE_MESH_MODEL_OP_GATT_PROXY_GET
Config GATT Proxy Get

ESP_BLE_MESH_MODEL_OP_RELAY_GET
Config Relay Get

ESP_BLE_MESH_MODEL_OP_MODEL_PUB_GET
Config Model Publication Get

ESP_BLE_MESH_MODEL_OP_FRIEND_GET
Config Friend Get

ESP_BLE_MESH_MODEL_OP_HEARTBEAT_PUB_GET
Config Heartbeat Publication Get

ESP_BLE_MESH_MODEL_OP_HEARTBEAT_SUB_GET
Config Heartbeat Subscription Get

ESP_BLE_MESH_MODEL_OP_NET_KEY_GET
Config NetKey Get

ESP_BLE_MESH_MODEL_OP_APP_KEY_GET

Config AppKey Get

ESP_BLE_MESH_MODEL_OP_NODE_IDENTITY_GET

Config Node Identity Get

ESP_BLE_MESH_MODEL_OP_SIG_MODEL_SUB_GET

Config SIG Model Subscription Get

ESP_BLE_MESH_MODEL_OP_VENDOR_MODEL_SUB_GET

Config Vendor Model Subscription Get

ESP_BLE_MESH_MODEL_OP_SIG_MODEL_APP_GET

Config SIG Model App Get

ESP_BLE_MESH_MODEL_OP_VENDOR_MODEL_APP_GET

Config Vendor Model App Get

ESP_BLE_MESH_MODEL_OP_KEY_REFRESH_PHASE_GET

Config Key Refresh Phase Get

ESP_BLE_MESH_MODEL_OP_LPN_POLLTIMEOUT_GET

Config Low Power Node PollTimeout Get

ESP_BLE_MESH_MODEL_OP_NETWORK_TRANSMIT_GET

Config Network Transmit Get

ESP_BLE_MESH_MODEL_OP_BEACON_SET

Config Beacon Set

ESP_BLE_MESH_MODEL_OP_DEFAULT_TTL_SET

Config Default TTL Set

ESP_BLE_MESH_MODEL_OP_GATT_PROXY_SET

Config GATT Proxy Set

ESP_BLE_MESH_MODEL_OP_RELAY_SET

Config Relay Set

ESP_BLE_MESH_MODEL_OP_MODEL_PUB_SET

Config Model Publication Set

ESP_BLE_MESH_MODEL_OP_MODEL_SUB_ADD

Config Model Subscription Add

ESP_BLE_MESH_MODEL_OP_MODEL_SUB_VIRTUAL_ADDR_ADD

Config Model Subscription Virtual Address Add

ESP_BLE_MESH_MODEL_OP_MODEL_SUB_DELETE

Config Model Subscription Delete

ESP_BLE_MESH_MODEL_OP_MODEL_SUB_VIRTUAL_ADDR_DELETE

Config Model Subscription Virtual Address Delete

ESP_BLE_MESH_MODEL_OP_MODEL_SUB_OVERWRITE

Config Model Subscription Overwrite

ESP_BLE_MESH_MODEL_OP_MODEL_SUB_VIRTUAL_ADDR_OVERWRITE

Config Model Subscription Virtual Address Overwrite

ESP_BLE_MESH_MODEL_OP_NET_KEY_ADD

Config NetKey Add

ESP_BLE_MESH_MODEL_OP_APP_KEY_ADD

Config AppKey Add

ESP_BLE_MESH_MODEL_OP_MODEL_APP_BIND

Config Model App Bind

ESP_BLE_MESH_MODEL_OP_NODE_RESET

Config Node Reset

ESP_BLE_MESH_MODEL_OP_FRIEND_SET

Config Friend Set

ESP_BLE_MESH_MODEL_OP_HEARTBEAT_PUB_SET

Config Heartbeat Publication Set

ESP_BLE_MESH_MODEL_OP_HEARTBEAT_SUB_SET

Config Heartbeat Subscription Set

ESP_BLE_MESH_MODEL_OP_NET_KEY_UPDATE

Config NetKey Update

ESP_BLE_MESH_MODEL_OP_NET_KEY_DELETE

Config NetKey Delete

ESP_BLE_MESH_MODEL_OP_APP_KEY_UPDATE

Config AppKey Update

ESP_BLE_MESH_MODEL_OP_APP_KEY_DELETE

Config AppKey Delete

ESP_BLE_MESH_MODEL_OP_NODE_IDENTITY_SET

Config Node Identity Set

ESP_BLE_MESH_MODEL_OP_KEY_REFRESH_PHASE_SET
Config Key Refresh Phase Set

ESP_BLE_MESH_MODEL_OP_MODEL_PUB_VIRTUAL_ADDR_SET
Config Model Publication Virtual Address Set

ESP_BLE_MESH_MODEL_OP_MODEL_SUB_DELETE_ALL
Config Model Subscription Delete All

ESP_BLE_MESH_MODEL_OP_MODEL_APP_UNBIND
Config Model App Unbind

ESP_BLE_MESH_MODEL_OP_NETWORK_TRANSMIT_SET
Config Network Transmit Set

ESP_BLE_MESH_MODEL_OP_BEACON_STATUS

ESP_BLE_MESH_MODEL_OP_COMPOSITION_DATA_STATUS

ESP_BLE_MESH_MODEL_OP_DEFAULT_TTL_STATUS

ESP_BLE_MESH_MODEL_OP_GATT_PROXY_STATUS

ESP_BLE_MESH_MODEL_OP_RELAY_STATUS

ESP_BLE_MESH_MODEL_OP_MODEL_PUB_STATUS

ESP_BLE_MESH_MODEL_OP_MODEL_SUB_STATUS

ESP_BLE_MESH_MODEL_OP_SIG_MODEL_SUB_LIST

ESP_BLE_MESH_MODEL_OP_VENDOR_MODEL_SUB_LIST

ESP_BLE_MESH_MODEL_OP_NET_KEY_STATUS

ESP_BLE_MESH_MODEL_OP_NET_KEY_LIST

ESP_BLE_MESH_MODEL_OP_APP_KEY_STATUS

ESP_BLE_MESH_MODEL_OP_APP_KEY_LIST

ESP_BLE_MESH_MODEL_OP_NODE_IDENTITY_STATUS

ESP_BLE_MESH_MODEL_OP_MODEL_APP_STATUS

ESP_BLE_MESH_MODEL_OP_SIG_MODEL_APP_LIST

ESP_BLE_MESH_MODEL_OP_VENDOR_MODEL_APP_LIST

ESP_BLE_MESH_MODEL_OP_NODE_RESET_STATUS

ESP_BLE_MESH_MODEL_OP_FRIEND_STATUS

ESP_BLE_MESH_MODEL_OP_KEY_REFRESH_PHASE_STATUS

ESP_BLE_MESH_MODEL_OP_HEARTBEAT_PUB_STATUS

ESP_BLE_MESH_MODEL_OP_HEARTBEAT_SUB_STATUS

ESP_BLE_MESH_MODEL_OP_LPN_POLLTIMEOUT_STATUS

ESP_BLE_MESH_MODEL_OP_NETWORK_TRANSMIT_STATUS

ESP_BLE_MESH_CFG_STATUS_SUCCESS

ESP_BLE_MESH_CFG_STATUS_INVALID_ADDRESS

ESP_BLE_MESH_CFG_STATUS_INVALID_MODEL

ESP_BLE_MESH_CFG_STATUS_INVALID_APPKEY

ESP_BLE_MESH_CFG_STATUS_INVALID_NETKEY

ESP_BLE_MESH_CFG_STATUS_INSUFFICIENT_RESOURCES

ESP_BLE_MESH_CFG_STATUS_KEY_INDEX_ALREADY_STORED

ESP_BLE_MESH_CFG_STATUS_INVALID_PUBLISH_PARAMETERS

ESP_BLE_MESH_CFG_STATUS_NOT_A_SUBSCRIBE_MODEL

ESP_BLE_MESH_CFG_STATUS_STORAGE_FAILURE

ESP_BLE_MESH_CFG_STATUS_FEATURE_NOT_SUPPORTED

ESP_BLE_MESH_CFG_STATUS_CANNOT_UPDATE

ESP_BLE_MESH_CFG_STATUS_CANNOT_REMOVE

ESP_BLE_MESH_CFG_STATUS_CANNOT_BIND

ESP_BLE_MESH_CFG_STATUS_TEMP_UNABLE_TO_CHANGE_STATE

ESP_BLE_MESH_CFG_STATUS_CANNOT_SET

ESP_BLE_MESH_CFG_STATUS_UNSPECIFIED_ERROR

ESP_BLE_MESH_CFG_STATUS_INVALID_BINDING

ESP_BLE_MESH_MODEL_OP_HEALTH_FAULT_GET
Health Fault Get

ESP_BLE_MESH_MODEL_OP_HEALTH_PERIOD_GET
Health Period Get

ESP_BLE_MESH_MODEL_OP_ATTENTION_GET
Health Attention Get

ESP_BLE_MESH_MODEL_OP_HEALTH_FAULT_CLEAR
Health Fault Clear

ESP_BLE_MESH_MODEL_OP_HEALTH_FAULT_CLEAR_UNACK
Health Fault Clear Unacknowledged

ESP_BLE_MESH_MODEL_OP_HEALTH_FAULT_TEST
Health Fault Test

ESP_BLE_MESH_MODEL_OP_HEALTH_FAULT_TEST_UNACK
Health Fault Test Unacknowledged

ESP_BLE_MESH_MODEL_OP_HEALTH_PERIOD_SET
Health Period Set

ESP_BLE_MESH_MODEL_OP_HEALTH_PERIOD_SET_UNACK
Health Period Set Unacknowledged

ESP_BLE_MESH_MODEL_OP_ATTENTION_SET
Health Attention Set

ESP_BLE_MESH_MODEL_OP_ATTENTION_SET_UNACK
Health Attention Set Unacknowledged

ESP_BLE_MESH_MODEL_OP_HEALTH_CURRENT_STATUS

ESP_BLE_MESH_MODEL_OP_HEALTH_FAULT_STATUS

ESP_BLE_MESH_MODEL_OP_HEALTH_PERIOD_STATUS

ESP_BLE_MESH_MODEL_OP_ATTENTION_STATUS

ESP_BLE_MESH_MODEL_OP_GEN_ONOFF_GET

ESP_BLE_MESH_MODEL_OP_GEN_ONOFF_SET

ESP_BLE_MESH_MODEL_OP_GEN_ONOFF_SET_UNACK

ESP_BLE_MESH_MODEL_OP_GEN_ONOFF_STATUS
Generic Level Message Opcode

ESP_BLE_MESH_MODEL_OP_GEN_LEVEL_GET

ESP_BLE_MESH_MODEL_OP_GEN_LEVEL_SET

ESP_BLE_MESH_MODEL_OP_GEN_LEVEL_SET_UNACK

ESP_BLE_MESH_MODEL_OP_GEN_LEVEL_STATUS

ESP_BLE_MESH_MODEL_OP_GEN_DELTA_SET

ESP_BLE_MESH_MODEL_OP_GEN_DELTA_SET_UNACK

ESP_BLE_MESH_MODEL_OP_GEN_MOVE_SET

ESP_BLE_MESH_MODEL_OP_GEN_MOVE_SET_UNACK
Generic Default Transition Time Message Opcode

ESP_BLE_MESH_MODEL_OP_GEN_DEF_TRANS_TIME_GET

ESP_BLE_MESH_MODEL_OP_GEN_DEF_TRANS_TIME_SET

ESP_BLE_MESH_MODEL_OP_GEN_DEF_TRANS_TIME_SET_UNACK

ESP_BLE_MESH_MODEL_OP_GEN_DEF_TRANS_TIME_STATUS
Generic Power OnOff Message Opcode

ESP_BLE_MESH_MODEL_OP_GEN_ONPOWERUP_GET

ESP_BLE_MESH_MODEL_OP_GEN_ONPOWERUP_STATUS
Generic Power OnOff Setup Message Opcode

ESP_BLE_MESH_MODEL_OP_GEN_ONPOWERUP_SET

ESP_BLE_MESH_MODEL_OP_GEN_ONPOWERUP_SET_UNACK
Generic Power Level Message Opcode

ESP_BLE_MESH_MODEL_OP_GEN_POWER_LEVEL_GET

ESP_BLE_MESH_MODEL_OP_GEN_POWER_LEVEL_SET

ESP_BLE_MESH_MODEL_OP_GEN_POWER_LEVEL_SET_UNACK

ESP_BLE_MESH_MODEL_OP_GEN_POWER_LEVEL_STATUS

ESP_BLE_MESH_MODEL_OP_GEN_POWER_LAST_GET

ESP_BLE_MESH_MODEL_OP_GEN_POWER_LAST_STATUS

ESP_BLE_MESH_MODEL_OP_GEN_POWER_DEFAULT_GET

ESP_BLE_MESH_MODEL_OP_GEN_POWER_DEFAULT_STATUS

ESP_BLE_MESH_MODEL_OP_GEN_POWER_RANGE_GET

ESP_BLE_MESH_MODEL_OP_GEN_POWER_RANGE_STATUS

Generic Power Level Setup Message Opcode

ESP_BLE_MESH_MODEL_OP_GEN_POWER_DEFAULT_SET

ESP_BLE_MESH_MODEL_OP_GEN_POWER_DEFAULT_SET_UNACK

ESP_BLE_MESH_MODEL_OP_GEN_POWER_RANGE_SET

ESP_BLE_MESH_MODEL_OP_GEN_POWER_RANGE_SET_UNACK

Generic Battery Message Opcode

ESP_BLE_MESH_MODEL_OP_GEN_BATTERY_GET

ESP_BLE_MESH_MODEL_OP_GEN_BATTERY_STATUS

Generic Location Message Opcode

ESP_BLE_MESH_MODEL_OP_GEN_LOC_GLOBAL_GET

ESP_BLE_MESH_MODEL_OP_GEN_LOC_GLOBAL_STATUS

ESP_BLE_MESH_MODEL_OP_GEN_LOC_LOCAL_GET

ESP_BLE_MESH_MODEL_OP_GEN_LOC_LOCAL_STATUS

Generic Location Setup Message Opcode

ESP_BLE_MESH_MODEL_OP_GEN_LOC_GLOBAL_SET

ESP_BLE_MESH_MODEL_OP_GEN_LOC_GLOBAL_SET_UNACK

ESP_BLE_MESH_MODEL_OP_GEN_LOC_LOCAL_SET

ESP_BLE_MESH_MODEL_OP_GEN_LOC_LOCAL_SET_UNACK

Generic Manufacturer Property Message Opcode

ESP_BLE_MESH_MODEL_OP_GEN_MANUFACTURER_PROPERTIES_GET

ESP_BLE_MESH_MODEL_OP_GEN_MANUFACTURER_PROPERTIES_STATUS

ESP_BLE_MESH_MODEL_OP_GEN_MANUFACTURER_PROPERTY_GET

ESP_BLE_MESH_MODEL_OP_GEN_MANUFACTURER_PROPERTY_SET

ESP_BLE_MESH_MODEL_OP_GEN_MANUFACTURER_PROPERTY_SET_UNACK

ESP_BLE_MESH_MODEL_OP_GEN_MANUFACTURER_PROPERTY_STATUS

Generic Admin Property Message Opcode

ESP_BLE_MESH_MODEL_OP_GEN_ADMIN_PROPERTIES_GET

ESP_BLE_MESH_MODEL_OP_GEN_ADMIN_PROPERTIES_STATUS

ESP_BLE_MESH_MODEL_OP_GEN_ADMIN_PROPERTY_GET

ESP_BLE_MESH_MODEL_OP_GEN_ADMIN_PROPERTY_SET

ESP_BLE_MESH_MODEL_OP_GEN_ADMIN_PROPERTY_SET_UNACK

ESP_BLE_MESH_MODEL_OP_GEN_ADMIN_PROPERTY_STATUS

Generic User Property Message Opcode

ESP_BLE_MESH_MODEL_OP_GEN_USER_PROPERTIES_GET

ESP_BLE_MESH_MODEL_OP_GEN_USER_PROPERTIES_STATUS

ESP_BLE_MESH_MODEL_OP_GEN_USER_PROPERTY_GET

ESP_BLE_MESH_MODEL_OP_GEN_USER_PROPERTY_SET

ESP_BLE_MESH_MODEL_OP_GEN_USER_PROPERTY_SET_UNACK

ESP_BLE_MESH_MODEL_OP_GEN_USER_PROPERTY_STATUS

Generic Client Property Message Opcode

ESP_BLE_MESH_MODEL_OP_GEN_CLIENT_PROPERTIES_GET

ESP_BLE_MESH_MODEL_OP_GEN_CLIENT_PROPERTIES_STATUS

ESP_BLE_MESH_MODEL_OP_SENSOR_DESCRIPTOR_GET

ESP_BLE_MESH_MODEL_OP_SENSOR_DESCRIPTOR_STATUS

ESP_BLE_MESH_MODEL_OP_SENSOR_GET

ESP_BLE_MESH_MODEL_OP_SENSOR_STATUS

ESP_BLE_MESH_MODEL_OP_SENSOR_COLUMN_GET

ESP_BLE_MESH_MODEL_OP_SENSOR_COLUMN_STATUS

ESP_BLE_MESH_MODEL_OP_SENSOR_SERIES_GET

ESP_BLE_MESH_MODEL_OP_SENSOR_SERIES_STATUS
Sensor Setup Message Opcode

ESP_BLE_MESH_MODEL_OP_SENSOR_CADENCE_GET

ESP_BLE_MESH_MODEL_OP_SENSOR_CADENCE_SET

ESP_BLE_MESH_MODEL_OP_SENSOR_CADENCE_SET_UNACK

ESP_BLE_MESH_MODEL_OP_SENSOR_CADENCE_STATUS

ESP_BLE_MESH_MODEL_OP_SENSOR_SETTINGS_GET

ESP_BLE_MESH_MODEL_OP_SENSOR_SETTINGS_STATUS

ESP_BLE_MESH_MODEL_OP_SENSOR_SETTING_GET

ESP_BLE_MESH_MODEL_OP_SENSOR_SETTING_SET

ESP_BLE_MESH_MODEL_OP_SENSOR_SETTING_SET_UNACK

ESP_BLE_MESH_MODEL_OP_SENSOR_SETTING_STATUS

ESP_BLE_MESH_MODEL_OP_TIME_GET

ESP_BLE_MESH_MODEL_OP_TIME_SET

ESP_BLE_MESH_MODEL_OP_TIME_STATUS

ESP_BLE_MESH_MODEL_OP_TIME_ROLE_GET

ESP_BLE_MESH_MODEL_OP_TIME_ROLE_SET

ESP_BLE_MESH_MODEL_OP_TIME_ROLE_STATUS

ESP_BLE_MESH_MODEL_OP_TIME_ZONE_GET

ESP_BLE_MESH_MODEL_OP_TIME_ZONE_SET

ESP_BLE_MESH_MODEL_OP_TIME_ZONE_STATUS

ESP_BLE_MESH_MODEL_OP_TAI_UTC_DELTA_GET

ESP_BLE_MESH_MODEL_OP_TAI_UTC_DELTA_SET

ESP_BLE_MESH_MODEL_OP_TAI_UTC_DELTA_STATUS
Scene Message Opcode

ESP_BLE_MESH_MODEL_OP_SCENE_GET

ESP_BLE_MESH_MODEL_OP_SCENE_RECALL

ESP_BLE_MESH_MODEL_OP_SCENE_RECALL_UNACK

ESP_BLE_MESH_MODEL_OP_SCENE_STATUS

ESP_BLE_MESH_MODEL_OP_SCENE_REGISTER_GET

ESP_BLE_MESH_MODEL_OP_SCENE_REGISTER_STATUS
Scene Setup Message Opcode

ESP_BLE_MESH_MODEL_OP_SCENE_STORE

ESP_BLE_MESH_MODEL_OP_SCENE_STORE_UNACK

ESP_BLE_MESH_MODEL_OP_SCENE_DELETE

ESP_BLE_MESH_MODEL_OP_SCENE_DELETE_UNACK
Scheduler Message Opcode

ESP_BLE_MESH_MODEL_OP_SCHEDULER_ACT_GET

ESP_BLE_MESH_MODEL_OP_SCHEDULER_ACT_STATUS

ESP_BLE_MESH_MODEL_OP_SCHEDULER_GET

ESP_BLE_MESH_MODEL_OP_SCHEDULER_STATUS
Scheduler Setup Message Opcode

ESP_BLE_MESH_MODEL_OP_SCHEDULER_ACT_SET

ESP_BLE_MESH_MODEL_OP_SCHEDULER_ACT_SET_UNACK

ESP_BLE_MESH_MODEL_OP_LIGHT_LIGHTNESS_GET

ESP_BLE_MESH_MODEL_OP_LIGHT_LIGHTNESS_SET

ESP_BLE_MESH_MODEL_OP_LIGHT_LIGHTNESS_SET_UNACK

ESP_BLE_MESH_MODEL_OP_LIGHT_LIGHTNESS_STATUS

ESP_BLE_MESH_MODEL_OP_LIGHT_LIGHTNESS_LINEAR_GET

ESP_BLE_MESH_MODEL_OP_LIGHT_LIGHTNESS_LINEAR_SET

ESP_BLE_MESH_MODEL_OP_LIGHT_LIGHTNESS_LINEAR_SET_UNACK

ESP_BLE_MESH_MODEL_OP_LIGHT_LIGHTNESS_LINEAR_STATUS

ESP_BLE_MESH_MODEL_OP_LIGHT_LIGHTNESS_LAST_GET

ESP_BLE_MESH_MODEL_OP_LIGHT_LIGHTNESS_LAST_STATUS

ESP_BLE_MESH_MODEL_OP_LIGHT_LIGHTNESS_DEFAULT_GET

ESP_BLE_MESH_MODEL_OP_LIGHT_LIGHTNESS_DEFAULT_STATUS

ESP_BLE_MESH_MODEL_OP_LIGHT_LIGHTNESS_RANGE_GET

ESP_BLE_MESH_MODEL_OP_LIGHT_LIGHTNESS_RANGE_STATUS
Light Lightness Setup Message Opcode

ESP_BLE_MESH_MODEL_OP_LIGHT_LIGHTNESS_DEFAULT_SET

ESP_BLE_MESH_MODEL_OP_LIGHT_LIGHTNESS_DEFAULT_SET_UNACK

ESP_BLE_MESH_MODEL_OP_LIGHT_LIGHTNESS_RANGE_SET

ESP_BLE_MESH_MODEL_OP_LIGHT_LIGHTNESS_RANGE_SET_UNACK
Light CTL Message Opcode

ESP_BLE_MESH_MODEL_OP_LIGHT_CTL_GET

ESP_BLE_MESH_MODEL_OP_LIGHT_CTL_SET

ESP_BLE_MESH_MODEL_OP_LIGHT_CTL_SET_UNACK

ESP_BLE_MESH_MODEL_OP_LIGHT_CTL_STATUS

ESP_BLE_MESH_MODEL_OP_LIGHT_CTL_TEMPERATURE_GET

ESP_BLE_MESH_MODEL_OP_LIGHT_CTL_TEMPERATURE_RANGE_GET

ESP_BLE_MESH_MODEL_OP_LIGHT_CTL_TEMPERATURE_RANGE_STATUS

ESP_BLE_MESH_MODEL_OP_LIGHT_CTL_TEMPERATURE_SET

ESP_BLE_MESH_MODEL_OP_LIGHT_CTL_TEMPERATURE_SET_UNACK

ESP_BLE_MESH_MODEL_OP_LIGHT_CTL_TEMPERATURE_STATUS

ESP_BLE_MESH_MODEL_OP_LIGHT_CTL_DEFAULT_GET

ESP_BLE_MESH_MODEL_OP_LIGHT_CTL_DEFAULT_STATUS
Light CTL Setup Message Opcode

ESP_BLE_MESH_MODEL_OP_LIGHT_CTL_DEFAULT_SET

ESP_BLE_MESH_MODEL_OP_LIGHT_CTL_DEFAULT_SET_UNACK

ESP_BLE_MESH_MODEL_OP_LIGHT_CTL_TEMPERATURE_RANGE_SET

ESP_BLE_MESH_MODEL_OP_LIGHT_CTL_TEMPERATURE_RANGE_SET_UNACK
Light HSL Message Opcode

ESP_BLE_MESH_MODEL_OP_LIGHT_HSL_GET

ESP_BLE_MESH_MODEL_OP_LIGHT_HSL_HUE_GET

ESP_BLE_MESH_MODEL_OP_LIGHT_HSL_HUE_SET

ESP_BLE_MESH_MODEL_OP_LIGHT_HSL_HUE_SET_UNACK

ESP_BLE_MESH_MODEL_OP_LIGHT_HSL_HUE_STATUS

ESP_BLE_MESH_MODEL_OP_LIGHT_HSL_SATURATION_GET

ESP_BLE_MESH_MODEL_OP_LIGHT_HSL_SATURATION_SET

ESP_BLE_MESH_MODEL_OP_LIGHT_HSL_SATURATION_SET_UNACK

ESP_BLE_MESH_MODEL_OP_LIGHT_HSL_SATURATION_STATUS

ESP_BLE_MESH_MODEL_OP_LIGHT_HSL_SET

ESP_BLE_MESH_MODEL_OP_LIGHT_HSL_SET_UNACK

ESP_BLE_MESH_MODEL_OP_LIGHT_HSL_STATUS

ESP_BLE_MESH_MODEL_OP_LIGHT_HSL_TARGET_GET

ESP_BLE_MESH_MODEL_OP_LIGHT_HSL_TARGET_STATUS

ESP_BLE_MESH_MODEL_OP_LIGHT_HSL_DEFAULT_GET

ESP_BLE_MESH_MODEL_OP_LIGHT_HSL_DEFAULT_STATUS

ESP_BLE_MESH_MODEL_OP_LIGHT_HSL_RANGE_GET

ESP_BLE_MESH_MODEL_OP_LIGHT_HSL_RANGE_STATUS
Light HSL Setup Message Opcode

ESP_BLE_MESH_MODEL_OP_LIGHT_HSL_DEFAULT_SET

ESP_BLE_MESH_MODEL_OP_LIGHT_HSL_DEFAULT_SET_UNACK

ESP_BLE_MESH_MODEL_OP_LIGHT_HSL_RANGE_SET

ESP_BLE_MESH_MODEL_OP_LIGHT_HSL_RANGE_SET_UNACK
Light xyL Message Opcode

ESP_BLE_MESH_MODEL_OP_LIGHT_XYL_GET

ESP_BLE_MESH_MODEL_OP_LIGHT_XYL_SET

ESP_BLE_MESH_MODEL_OP_LIGHT_XYL_SET_UNACK

ESP_BLE_MESH_MODEL_OP_LIGHT_XYL_STATUS

ESP_BLE_MESH_MODEL_OP_LIGHT_XYL_TARGET_GET

ESP_BLE_MESH_MODEL_OP_LIGHT_XYL_TARGET_STATUS

ESP_BLE_MESH_MODEL_OP_LIGHT_XYL_DEFAULT_GET

ESP_BLE_MESH_MODEL_OP_LIGHT_XYL_DEFAULT_STATUS

ESP_BLE_MESH_MODEL_OP_LIGHT_XYL_RANGE_GET

ESP_BLE_MESH_MODEL_OP_LIGHT_XYL_RANGE_STATUS

Light xyL Setup Message Opcode

ESP_BLE_MESH_MODEL_OP_LIGHT_XYL_DEFAULT_SET

ESP_BLE_MESH_MODEL_OP_LIGHT_XYL_DEFAULT_SET_UNACK

ESP_BLE_MESH_MODEL_OP_LIGHT_XYL_RANGE_SET

ESP_BLE_MESH_MODEL_OP_LIGHT_XYL_RANGE_SET_UNACK

Light Control Message Opcode

ESP_BLE_MESH_MODEL_OP_LIGHT_LC_MODE_GET

ESP_BLE_MESH_MODEL_OP_LIGHT_LC_MODE_SET

ESP_BLE_MESH_MODEL_OP_LIGHT_LC_MODE_SET_UNACK

ESP_BLE_MESH_MODEL_OP_LIGHT_LC_MODE_STATUS

ESP_BLE_MESH_MODEL_OP_LIGHT_LC_OM_GET

ESP_BLE_MESH_MODEL_OP_LIGHT_LC_OM_SET

ESP_BLE_MESH_MODEL_OP_LIGHT_LC_OM_SET_UNACK

ESP_BLE_MESH_MODEL_OP_LIGHT_LC_OM_STATUS

ESP_BLE_MESH_MODEL_OP_LIGHT_LC_LIGHT_ONOFF_GET

ESP_BLE_MESH_MODEL_OP_LIGHT_LC_LIGHT_ONOFF_SET

ESP_BLE_MESH_MODEL_OP_LIGHT_LC_LIGHT_ONOFF_SET_UNACK

ESP_BLE_MESH_MODEL_OP_LIGHT_LC_LIGHT_ONOFF_STATUS

ESP_BLE_MESH_MODEL_OP_LIGHT_LC_PROPERTY_GET

ESP_BLE_MESH_MODEL_OP_LIGHT_LC_PROPERTY_SET

ESP_BLE_MESH_MODEL_OP_LIGHT_LC_PROPERTY_SET_UNACK

ESP_BLE_MESH_MODEL_OP_LIGHT_LC_PROPERTY_STATUS

ESP_BLE_MESH_MODEL_STATUS_SUCCESS

ESP_BLE_MESH_MODEL_STATUS_CANNOT_SET_RANGE_MIN

ESP_BLE_MESH_MODEL_STATUS_CANNOT_SET_RANGE_MAX

ESP_BLE_MESH_SERVER_RSP_BY_APP
Response need to be sent in the application

ESP_BLE_MESH_SERVER_AUTO_RSP
Response will be sent internally

Type Definitions

typedef uint8_t **esp_ble_mesh_octet16_t**[16]
Define the BLE Mesh octet 8 bytes size

typedef uint8_t **esp_ble_mesh_octet8_t**[8]
Invalid Company ID

typedef uint32_t **esp_ble_mesh_cb_t**

typedef uint8_t **UINT8**

typedef uint16_t **UINT16**

typedef uint32_t **UINT32**

typedef uint64_t **UINT64**

typedef *UINT8* **BT_OCTET32**[32]

typedef uint8_t **BD_ADDR**[6]

typedef uint8_t **esp_ble_mesh_bd_addr_t**[6]

typedef uint8_t **esp_ble_mesh_addr_type_t**
BLE device address type.

typedef struct *esp_ble_mesh_model* **esp_ble_mesh_model_t**

typedef uint8_t **esp_ble_mesh_dev_add_flag_t**

typedef uint32_t **esp_ble_mesh_opcode_config_client_get_t**

esp_ble_mesh_opcode_config_client_get_t belongs to esp_ble_mesh_opcode_t, this typedef is only used to locate the opcodes used by esp_ble_mesh_config_client_get_state. The following opcodes will only be used in the esp_ble_mesh_config_client_get_state function.

typedef uint32_t **esp_ble_mesh_opcode_config_client_set_t**

esp_ble_mesh_opcode_config_client_set_t belongs to esp_ble_mesh_opcode_t, this typedef is only used to locate the opcodes used by esp_ble_mesh_config_client_set_state. The following opcodes will only be used in the esp_ble_mesh_config_client_set_state function.

typedef uint32_t **esp_ble_mesh_opcode_config_status_t**

esp_ble_mesh_opcode_config_status_t belongs to esp_ble_mesh_opcode_t, this typedef is only used to locate the opcodes used by the Config Model messages The following opcodes are used by the BLE Mesh Config Server Model internally to respond to the Config Client Model' s request messages.

typedef uint8_t **esp_ble_mesh_cfg_status_t**

This typedef is only used to indicate the status code contained in some of the Configuration Server Model status message.

typedef uint32_t **esp_ble_mesh_opcode_health_client_get_t**

esp_ble_mesh_opcode_health_client_get_t belongs to esp_ble_mesh_opcode_t, this typedef is only used to locate the opcodes used by esp_ble_mesh_health_client_get_state. The following opcodes will only be used in the esp_ble_mesh_health_client_get_state function.

typedef uint32_t **esp_ble_mesh_opcode_health_client_set_t**

esp_ble_mesh_opcode_health_client_set_t belongs to esp_ble_mesh_opcode_t, this typedef is only used to locate the opcodes used by esp_ble_mesh_health_client_set_state. The following opcodes will only be used in the esp_ble_mesh_health_client_set_state function.

typedef uint32_t **esp_ble_mesh_health_model_status_t**

esp_ble_mesh_health_model_status_t belongs to esp_ble_mesh_opcode_t, this typedef is only used to locate the opcodes used by the Health Model messages. The following opcodes are used by the BLE Mesh Health Server Model internally to respond to the Health Client Model' s request messages.

typedef uint32_t **esp_ble_mesh_generic_message_opcode_t**

esp_ble_mesh_generic_message_opcode_t belongs to esp_ble_mesh_opcode_t, this typedef is only used to locate the opcodes used by functions esp_ble_mesh_generic_client_get_state & esp_ble_mesh_generic_client_set_state.Generic OnOff Message Opcode

typedef uint32_t **esp_ble_mesh_sensor_message_opcode_t**

esp_ble_mesh_sensor_message_opcode_t belongs to esp_ble_mesh_opcode_t, this typedef is only used to locate the opcodes used by functions esp_ble_mesh_sensor_client_get_state & esp_ble_mesh_sensor_client_set_state.Sensor Message Opcode

typedef uint32_t **esp_ble_mesh_time_scene_message_opcode_t**

esp_ble_mesh_time_scene_message_opcode_t belongs to esp_ble_mesh_opcode_t, this typedef is only used to locate the opcodes used by functions esp_ble_mesh_time_scene_client_get_state & esp_ble_mesh_time_scene_client_set_state.Time Message Opcode

typedef uint32_t **esp_ble_mesh_light_message_opcode_t**

esp_ble_mesh_light_message_opcode_t belongs to esp_ble_mesh_opcode_t, this typedef is

only used to locate the opcodes used by functions esp_ble_mesh_light_client_get_state & esp_ble_mesh_light_client_set_state.Light Lightness Message Opcode

typedef uint32_t **esp_ble_mesh_opcode_t**

End of defines of esp_ble_mesh_opcode_t

typedef uint8_t **esp_ble_mesh_model_status_t**

This typedef is only used to indicate the status code contained in some of the server models (e.g. Generic Server Model) status message.

Enumerations

enum **esp_ble_mesh_cb_type_t**

Values:

enumerator **ESP_BLE_MESH_TYPE_PROV_CB**

enumerator **ESP_BLE_MESH_TYPE_OUTPUT_NUM_CB**

enumerator **ESP_BLE_MESH_TYPE_OUTPUT_STR_CB**

enumerator **ESP_BLE_MESH_TYPE_INTPUT_CB**

enumerator **ESP_BLE_MESH_TYPE_LINK_OPEN_CB**

enumerator **ESP_BLE_MESH_TYPE_LINK_CLOSE_CB**

enumerator **ESP_BLE_MESH_TYPE_COMPLETE_CB**

enumerator **ESP_BLE_MESH_TYPE_RESET_CB**

enum **esp_ble_mesh_oob_method_t**

Values:

enumerator **ESP_BLE_MESH_NO_OOB**

enumerator **ESP_BLE_MESH_STATIC_OOB**

enumerator **ESP_BLE_MESH_OUTPUT_OOB**

enumerator **ESP_BLE_MESH_INPUT_OOB**

enum **esp_ble_mesh_output_action_t**

Values:

enumerator **ESP_BLE_MESH_NO_OUTPUT**

enumerator **ESP_BLE_MESH_BLINK**

enumerator **ESP_BLE_MESH_BEEP**

enumerator **ESP_BLE_MESH_VIBRATE**

enumerator **ESP_BLE_MESH_DISPLAY_NUMBER**

enumerator **ESP_BLE_MESH_DISPLAY_STRING**

enum **esp_ble_mesh_input_action_t**

Values:

enumerator **ESP_BLE_MESH_NO_INPUT**

enumerator **ESP_BLE_MESH_PUSH**

enumerator **ESP_BLE_MESH_TWIST**

enumerator **ESP_BLE_MESH_ENTER_NUMBER**

enumerator **ESP_BLE_MESH_ENTER_STRING**

enum **esp_ble_mesh_prov_bearer_t**

Values:

enumerator **ESP_BLE_MESH_PROV_ADV**

enumerator **ESP_BLE_MESH_PROV_GATT**

enum **esp_ble_mesh_prov_oob_info_t**

Values:

enumerator **ESP_BLE_MESH_PROV_OOB_OTHER**

enumerator **ESP_BLE_MESH_PROV_OOB_URI**

enumerator **ESP_BLE_MESH_PROV_OOB_2D_CODE**

enumerator **ESP_BLE_MESH_PROV_OOB_BAR_CODE**

enumerator **ESP_BLE_MESH_PROV_OOB_NFC**

enumerator **ESP_BLE_MESH_PROV_OOB_NUMBER**

enumerator **ESP_BLE_MESH_PROV_OOB_STRING**

enumerator **ESP_BLE_MESH_PROV_OOB_ON_BOX**

enumerator **ESP_BLE_MESH_PROV_OOB_IN_BOX**

enumerator **ESP_BLE_MESH_PROV_OOB_ON_PAPER**

enumerator **ESP_BLE_MESH_PROV_OOB_IN_MANUAL**

enumerator **ESP_BLE_MESH_PROV_OOB_ON_DEV**

enum **esp_ble_mesh_dev_role_t**

Values:

enumerator **ROLE_NODE**

enumerator **ROLE_PROVISIONER**

enumerator **ROLE_FAST_PROV**

enum **esp_ble_mesh_fast_prov_action_t**

Values:

enumerator **FAST_PROV_ACT_NONE**

enumerator **FAST_PROV_ACT_ENTER**

enumerator **FAST_PROV_ACT_SUSPEND**

enumerator **FAST_PROV_ACT_EXIT**

enumerator **FAST_PROV_ACT_MAX**

enum **esp_ble_mesh_proxy_filter_type_t**

Values:

enumerator **PROXY_FILTER_WHITELIST**

enumerator **PROXY_FILTER_BLACKLIST**

enum **esp_ble_mesh_prov_cb_event_t**

Values:

enumerator **ESP_BLE_MESH_PROV_REGISTER_COMP_EVT**

Initialize BLE Mesh provisioning capabilities and internal data information completion event

enumerator **ESP_BLE_MESH_NODE_SET_UNPROV_DEV_NAME_COMP_EVT**

Set the unprovisioned device name completion event

enumerator **ESP_BLE_MESH_NODE_PROV_ENABLE_COMP_EVT**

Enable node provisioning functionality completion event

enumerator **ESP_BLE_MESH_NODE_PROV_DISABLE_COMP_EVT**

Disable node provisioning functionality completion event

enumerator **ESP_BLE_MESH_NODE_PROV_LINK_OPEN_EVT**

Establish a BLE Mesh link event

enumerator **ESP_BLE_MESH_NODE_PROV_LINK_CLOSE_EVT**

Close a BLE Mesh link event

enumerator **ESP_BLE_MESH_NODE_PROV_OOB_PUB_KEY_EVT**

Generate Node input OOB public key event

enumerator **ESP_BLE_MESH_NODE_PROV_OUTPUT_NUMBER_EVT**

Generate Node Output Number event

enumerator **ESP_BLE_MESH_NODE_PROV_OUTPUT_STRING_EVT**

Generate Node Output String event

enumerator **ESP_BLE_MESH_NODE_PROV_INPUT_EVT**

Event requiring the user to input a number or string

enumerator **ESP_BLE_MESH_NODE_PROV_COMPLETE_EVT**

Provisioning done event

enumerator **ESP_BLE_MESH_NODE_PROV_RESET_EVT**

Provisioning reset event

enumerator **ESP_BLE_MESH_NODE_PROV_SET_OOB_PUB_KEY_COMP_EVT**

Node set oob public key completion event

enumerator **ESP_BLE_MESH_NODE_PROV_INPUT_NUMBER_COMP_EVT**

Node input number completion event

enumerator **ESP_BLE_MESH_NODE_PROV_INPUT_STRING_COMP_EVT**

Node input string completion event

enumerator **ESP_BLE_MESH_NODE_PROXY_IDENTITY_ENABLE_COMP_EVT**

Enable BLE Mesh Proxy Identity advertising completion event

enumerator **ESP_BLE_MESH_NODE_PROXY_GATT_ENABLE_COMP_EVT**

Enable BLE Mesh GATT Proxy Service completion event

enumerator **ESP_BLE_MESH_NODE_PROXY_GATT_DISABLE_COMP_EVT**

Disable BLE Mesh GATT Proxy Service completion event

enumerator **ESP_BLE_MESH_NODE_ADD_LOCAL_NET_KEY_COMP_EVT**

Node add NetKey locally completion event

enumerator **ESP_BLE_MESH_NODE_ADD_LOCAL_APP_KEY_COMP_EVT**

Node add AppKey locally completion event

enumerator **ESP_BLE_MESH_NODE_BIND_APP_KEY_TO_MODEL_COMP_EVT**

Node bind AppKey to model locally completion event

enumerator **ESP_BLE_MESH_PROVISIONER_PROV_ENABLE_COMP_EVT**

Provisioner enable provisioning functionality completion event

enumerator **ESP_BLE_MESH_PROVISIONER_PROV_DISABLE_COMP_EVT**

Provisioner disable provisioning functionality completion event

enumerator **ESP_BLE_MESH_PROVISIONER_RECV_UNPROV_ADV_PKT_EVT**

Provisioner receives unprovisioned device beacon event

enumerator **ESP_BLE_MESH_PROVISIONER_PROV_READ_OOB_PUB_KEY_EVT**

Provisioner read unprovisioned device OOB public key event

enumerator **ESP_BLE_MESH_PROVISIONER_PROV_INPUT_EVT**

Provisioner input value for provisioning procedure event

enumerator **ESP_BLE_MESH_PROVISIONER_PROV_OUTPUT_EVT**

Provisioner output value for provisioning procedure event

enumerator **ESP_BLE_MESH_PROVISIONER_PROV_LINK_OPEN_EVT**

Provisioner establish a BLE Mesh link event

enumerator **ESP_BLE_MESH_PROVISIONER_PROV_LINK_CLOSE_EVT**

Provisioner close a BLE Mesh link event

enumerator **ESP_BLE_MESH_PROVISIONER_PROV_COMPLETE_EVT**

Provisioner provisioning done event

enumerator **ESP_BLE_MESH_PROVISIONER_ADD_UNPROV_DEV_COMP_EVT**

Provisioner add a device to the list which contains devices that are waiting/going to be provisioned completion event

enumerator **ESP_BLE_MESH_PROVISIONER_PROV_DEV_WITH_ADDR_COMP_EVT**

Provisioner start to provision an unprovisioned device completion event

enumerator **ESP_BLE_MESH_PROVISIONER_DELETE_DEV_COMP_EVT**

Provisioner delete a device from the list, close provisioning link with the device completion event

enumerator **ESP_BLE_MESH_PROVISIONER_SET_DEV_UUID_MATCH_COMP_EVT**

Provisioner set the value to be compared with part of the unprovisioned device UUID completion event

enumerator **ESP_BLE_MESH_PROVISIONER_SET_PROV_DATA_INFO_COMP_EVT**
Provisioner set net_idx/flags/iv_index used for provisioning completion event

enumerator **ESP_BLE_MESH_PROVISIONER_SET_STATIC_OOB_VALUE_COMP_EVT**
Provisioner set static oob value used for provisioning completion event

enumerator **ESP_BLE_MESH_PROVISIONER_SET_PRIMARY_ELEM_ADDR_COMP_EVT**
Provisioner set unicast address of primary element completion event

enumerator **ESP_BLE_MESH_PROVISIONER_PROV_READ_OOB_PUB_KEY_COMP_EVT**
Provisioner read unprovisioned device OOB public key completion event

enumerator **ESP_BLE_MESH_PROVISIONER_PROV_INPUT_NUMBER_COMP_EVT**
Provisioner input number completion event

enumerator **ESP_BLE_MESH_PROVISIONER_PROV_INPUT_STRING_COMP_EVT**
Provisioner input string completion event

enumerator **ESP_BLE_MESH_PROVISIONER_SET_NODE_NAME_COMP_EVT**
Provisioner set node name completion event

enumerator **ESP_BLE_MESH_PROVISIONER_ADD_LOCAL_APP_KEY_COMP_EVT**
Provisioner add local app key completion event

enumerator **ESP_BLE_MESH_PROVISIONER_UPDATE_LOCAL_APP_KEY_COMP_EVT**
Provisioner update local app key completion event

enumerator **ESP_BLE_MESH_PROVISIONER_BIND_APP_KEY_TO_MODEL_COMP_EVT**
Provisioner bind local model with local app key completion event

enumerator **ESP_BLE_MESH_PROVISIONER_ADD_LOCAL_NET_KEY_COMP_EVT**
Provisioner add local network key completion event

enumerator **ESP_BLE_MESH_PROVISIONER_UPDATE_LOCAL_NET_KEY_COMP_EVT**
Provisioner update local network key completion event

enumerator **ESP_BLE_MESH_PROVISIONER_STORE_NODE_COMP_DATA_COMP_EVT**
Provisioner store node composition data completion event

enumerator **ESP_BLE_MESH_PROVISIONER_DELETE_NODE_WITH_UUID_COMP_EVT**
Provisioner delete node with uuid completion event

enumerator **ESP_BLE_MESH_PROVISIONER_DELETE_NODE_WITH_ADDR_COMP_EVT**
Provisioner delete node with unicast address completion event

enumerator **ESP_BLE_MESH_PROVISIONER_ENABLE_HEARTBEAT_RECV_COMP_EVT**
Provisioner start to receive heartbeat message completion event

enumerator **ESP_BLE_MESH_PROVISIONER_SET_HEARTBEAT_FILTER_TYPE_COMP_EVT**
Provisioner set the heartbeat filter type completion event

enumerator **ESP_BLE_MESH_PROVISIONER_SET_HEARTBEAT_FILTER_INFO_COMP_EVT**
Provisioner set the heartbeat filter information completion event

enumerator **ESP_BLE_MESH_PROVISIONER_RECV_HEARTBEAT_MESSAGE_EVT**
Provisioner receive heartbeat message event

enumerator **ESP_BLE_MESH_PROVISIONER_DRIECT_ERASE_SETTINGS_COMP_EVT**
Provisioner directly erase settings completion event

enumerator **ESP_BLE_MESH_PROVISIONER_OPEN_SETTINGS_WITH_INDEX_COMP_EVT**
Provisioner open settings with index completion event

enumerator **ESP_BLE_MESH_PROVISIONER_OPEN_SETTINGS_WITH_UID_COMP_EVT**
Provisioner open settings with user id completion event

enumerator **ESP_BLE_MESH_PROVISIONER_CLOSE_SETTINGS_WITH_INDEX_COMP_EVT**
Provisioner close settings with index completion event

enumerator **ESP_BLE_MESH_PROVISIONER_CLOSE_SETTINGS_WITH_UID_COMP_EVT**
Provisioner close settings with user id completion event

enumerator **ESP_BLE_MESH_PROVISIONER_DELETE_SETTINGS_WITH_INDEX_COMP_EVT**
Provisioner delete settings with index completion event

enumerator **ESP_BLE_MESH_PROVISIONER_DELETE_SETTINGS_WITH_UID_COMP_EVT**
Provisioner delete settings with user id completion event

enumerator **ESP_BLE_MESH_SET_FAST_PROV_INFO_COMP_EVT**
Set fast provisioning information (e.g. unicast address range, net_idx, etc.) completion event

enumerator **ESP_BLE_MESH_SET_FAST_PROV_ACTION_COMP_EVT**
Set fast provisioning action completion event

enumerator **ESP_BLE_MESH_HEARTBEAT_MESSAGE_RECV_EVT**
Receive Heartbeat message event

enumerator **ESP_BLE_MESH_LPN_ENABLE_COMP_EVT**
Enable Low Power Node completion event

enumerator **ESP_BLE_MESH_LPN_DISABLE_COMP_EVT**
Disable Low Power Node completion event

enumerator **ESP_BLE_MESH_LPN_POLL_COMP_EVT**
Low Power Node send Friend Poll completion event

enumerator **ESP_BLE_MESH_LPN_FRIENDSHIP_ESTABLISH_EVT**

Low Power Node establishes friendship event

enumerator **ESP_BLE_MESH_LPN_FRIENDSHIP_TERMINATE_EVT**

Low Power Node terminates friendship event

enumerator **ESP_BLE_MESH_FRIEND_FRIENDSHIP_ESTABLISH_EVT**

Friend Node establishes friendship event

enumerator **ESP_BLE_MESH_FRIEND_FRIENDSHIP_TERMINATE_EVT**

Friend Node terminates friendship event

enumerator **ESP_BLE_MESH_PROXY_CLIENT_RECV_ADV_PKT_EVT**

Proxy Client receives Network ID advertising packet event

enumerator **ESP_BLE_MESH_PROXY_CLIENT_CONNECTED_EVT**

Proxy Client establishes connection successfully event

enumerator **ESP_BLE_MESH_PROXY_CLIENT_DISCONNECTED_EVT**

Proxy Client terminates connection successfully event

enumerator **ESP_BLE_MESH_PROXY_CLIENT_RECV_FILTER_STATUS_EVT**

Proxy Client receives Proxy Filter Status event

enumerator **ESP_BLE_MESH_PROXY_CLIENT_CONNECT_COMP_EVT**

Proxy Client connect completion event

enumerator **ESP_BLE_MESH_PROXY_CLIENT_DISCONNECT_COMP_EVT**

Proxy Client disconnect completion event

enumerator **ESP_BLE_MESH_PROXY_CLIENT_SET_FILTER_TYPE_COMP_EVT**

Proxy Client set filter type completion event

enumerator **ESP_BLE_MESH_PROXY_CLIENT_ADD_FILTER_ADDR_COMP_EVT**

Proxy Client add filter address completion event

enumerator **ESP_BLE_MESH_PROXY_CLIENT_REMOVE_FILTER_ADDR_COMP_EVT**

Proxy Client remove filter address completion event

enumerator **ESP_BLE_MESH_PROXY_SERVER_CONNECTED_EVT**

Proxy Server establishes connection successfully event

enumerator **ESP_BLE_MESH_PROXY_SERVER_DISCONNECTED_EVT**

Proxy Server terminates connection successfully event

enumerator **ESP_BLE_MESH_MODEL_SUBSCRIBE_GROUP_ADDR_COMP_EVT**

Local model subscribes group address completion event

enumerator **ESP_BLE_MESH_MODEL_UNSUBSCRIBE_GROUP_ADDR_COMP_EVT**

Local model unsubscribes group address completion event

enumerator **ESP_BLE_MESH_DEINIT_MESH_COMP_EVT**

De-initialize BLE Mesh stack completion event

enumerator **ESP_BLE_MESH_PROV_EVT_MAX**

enum **[anonymous]**

BLE Mesh server models related definitions.

This enum value is the flag of transition timer operation

Values:

enumerator **ESP_BLE_MESH_SERVER_TRANS_TIMER_START**

enumerator **ESP_BLE_MESH_SERVER_FLAG_MAX**

enum **esp_ble_mesh_server_state_type_t**

This enum value is the type of server model states

Values:

enumerator **ESP_BLE_MESH_GENERIC_ONOFF_STATE**

enumerator **ESP_BLE_MESH_GENERIC_LEVEL_STATE**

enumerator **ESP_BLE_MESH_GENERIC_ONPOWERUP_STATE**

enumerator **ESP_BLE_MESH_GENERIC_POWER_ACTUAL_STATE**

enumerator **ESP_BLE_MESH_LIGHT_LIGHTNESS_ACTUAL_STATE**

enumerator **ESP_BLE_MESH_LIGHT_LIGHTNESS_LINEAR_STATE**

enumerator **ESP_BLE_MESH_LIGHT_CTL_LIGHTNESS_STATE**

enumerator **ESP_BLE_MESH_LIGHT_CTL_TEMP_DELTA_UV_STATE**

enumerator **ESP_BLE_MESH_LIGHT_HSL_STATE**

enumerator **ESP_BLE_MESH_LIGHT_HSL_LIGHTNESS_STATE**

enumerator **ESP_BLE_MESH_LIGHT_HSL_HUE_STATE**

enumerator **ESP_BLE_MESH_LIGHT_HSL_SATURATION_STATE**

enumerator **ESP_BLE_MESH_LIGHT_XYL_LIGHTNESS_STATE**

enumerator **ESP_BLE_MESH_LIGHT_LC_LIGHT_ONOFF_STATE**

enumerator **ESP_BLE_MESH_SERVER_MODEL_STATE_MAX**

enum **esp_ble_mesh_model_cb_event_t**

Values:

enumerator **ESP_BLE_MESH_MODEL_OPERATION_EVT**

User-defined models receive messages from peer devices (e.g. get, set, status, etc) event

enumerator **ESP_BLE_MESH_MODEL_SEND_COMP_EVT**

User-defined models send messages completion event

enumerator **ESP_BLE_MESH_MODEL_PUBLISH_COMP_EVT**

User-defined models publish messages completion event

enumerator **ESP_BLE_MESH_CLIENT_MODEL_RECV_PUBLISH_MSG_EVT**

User-defined client models receive publish messages event

enumerator **ESP_BLE_MESH_CLIENT_MODEL_SEND_TIMEOUT_EVT**

Timeout event for the user-defined client models that failed to receive response from peer server models

enumerator **ESP_BLE_MESH_MODEL_PUBLISH_UPDATE_EVT**

When a model is configured to publish messages periodically, this event will occur during every publish period

enumerator **ESP_BLE_MESH_SERVER_MODEL_UPDATE_STATE_COMP_EVT**

Server models update state value completion event

enumerator **ESP_BLE_MESH_MODEL_EVT_MAX**

ESP-BLE-MESH Core API Reference

This section contains ESP-BLE-MESH Core related APIs, which can be used to initialize ESP-BLE-MESH stack, provision, send/publish messages, etc.

This API reference covers six components:

- *ESP-BLE-MESH Stack Initialization*
- *Reading of Local Data Information*
- *Low Power Operation (Updating)*
- *Send/Publish Messages, add Local AppKey, etc.*
- *ESP-BLE-MESH Node/Provisioner Provisioning*
- *ESP-BLE-MESH GATT Proxy Server*

ESP-BLE-MESH Stack Initialization

Header File

- components/bt/esp_ble_mesh/api/core/include/esp_ble_mesh_common_api.h

Functions

esp_err_t **esp_ble_mesh_init** (*esp_ble_mesh_prov_t* *prov, *esp_ble_mesh_comp_t* *comp)

Initialize BLE Mesh module. This API initializes provisioning capabilities and composition data information.

Note: After calling this API, the device needs to call esp_ble_mesh_prov_enable() to enable provisioning functionality again.

Parameters

- **prov** –**[in]** Pointer to the device provisioning capabilities. This pointer must remain valid during the lifetime of the BLE Mesh device.
- **comp** –**[in]** Pointer to the device composition data information. This pointer must remain valid during the lifetime of the BLE Mesh device.

Returns ESP_OK on success or error code otherwise.

esp_err_t **esp_ble_mesh_deinit** (*esp_ble_mesh_deinit_param_t* *param)

De-initialize BLE Mesh module.

Note: This function shall be invoked after esp_ble_mesh_client_model_deinit().

Parameters **param** –**[in]** Pointer to the structure of BLE Mesh deinit parameters.

Returns ESP_OK on success or error code otherwise.

Reading of Local Data Information

Header File

- components/bt/esp_ble_mesh/api/core/include/esp_ble_mesh_local_data_operation_api.h

Functions

int32_t **esp_ble_mesh_get_model_publish_period** (*esp_ble_mesh_model_t* *model)

Get the model publish period, the unit is ms.

Parameters **model** –**[in]** Model instance pointer.

Returns Publish period value on success, 0 or (negative) error code from errno.h on failure.

uint16_t **esp_ble_mesh_get_primary_element_address** (void)

Get the address of the primary element.

Returns Address of the primary element on success, or ESP_BLE_MESH_ADDR_UNASSIGNED on failure which means the device has not been provisioned.

uint16_t ***esp_ble_mesh_is_model_subscribed_to_group*** (*esp_ble_mesh_model_t* *model, uint16_t group_addr)

Check if the model has subscribed to the given group address. Note: E.g., once a status message is received and the destination address is a group address, the model uses this API to check if it is successfully subscribed to the given group address.

Parameters

- **model** –**[in]** Pointer to the model.
- **group_addr** –**[in]** Group address.

Returns Pointer to the group address within the Subscription List of the model on success, or NULL on failure which means the model has not subscribed to the given group address. Note: With the pointer to the group address returned, you can reset the group address to 0x0000 in order to unsubscribe the model from the group.

esp_ble_mesh_elem_t ***esp_ble_mesh_find_element**(uint16_t element_addr)

Find the BLE Mesh element pointer via the element address.

Parameters **element_addr** –**[in]** Element address.
Returns Pointer to the element on success, or NULL on failure.

uint8_t **esp_ble_mesh_get_element_count**(void)

Get the number of elements that have been registered.

Returns Number of elements.

esp_ble_mesh_model_t ***esp_ble_mesh_find_vendor_model**(const *esp_ble_mesh_elem_t* *element, uint16_t company_id, uint16_t model_id)

Find the Vendor specific model with the given element, the company ID and the Vendor Model ID.

Parameters
- **element** –**[in]** Element to which the model belongs.
- **company_id** –**[in]** A 16-bit company identifier assigned by the Bluetooth SIG.
- **model_id** –**[in]** A 16-bit vendor-assigned model identifier.

Returns Pointer to the Vendor Model on success, or NULL on failure which means the Vendor Model is not found.

esp_ble_mesh_model_t ***esp_ble_mesh_find_sig_model**(const *esp_ble_mesh_elem_t* *element, uint16_t model_id)

Find the SIG model with the given element and Model id.

Parameters
- **element** –**[in]** Element to which the model belongs.
- **model_id** –**[in]** SIG model identifier.

Returns Pointer to the SIG Model on success, or NULL on failure which means the SIG Model is not found.

const *esp_ble_mesh_comp_t* ***esp_ble_mesh_get_composition_data**(void)

Get the Composition data which has been registered.

Returns Pointer to the Composition data on success, or NULL on failure which means the Composition data is not initialized.

esp_err_t **esp_ble_mesh_model_subscribe_group_addr**(uint16_t element_addr, uint16_t company_id, uint16_t model_id, uint16_t group_addr)

A local model of node or Provisioner subscribes a group address.

Note: This function shall not be invoked before node is provisioned or Provisioner is enabled.

Parameters
- **element_addr** –**[in]** Unicast address of the element to which the model belongs.
- **company_id** –**[in]** A 16-bit company identifier.
- **model_id** –**[in]** A 16-bit model identifier.
- **group_addr** –**[in]** The group address to be subscribed.

Returns ESP_OK on success or error code otherwise.

esp_err_t **esp_ble_mesh_model_unsubscribe_group_addr**(uint16_t element_addr, uint16_t company_id, uint16_t model_id, uint16_t group_addr)

A local model of node or Provisioner unsubscribes a group address.

Note: This function shall not be invoked before node is provisioned or Provisioner is enabled.

Parameters
- **element_addr** –**[in]** Unicast address of the element to which the model belongs.
- **company_id** –**[in]** A 16-bit company identifier.
- **model_id** –**[in]** A 16-bit model identifier.
- **group_addr** –**[in]** The subscribed group address.

Returns ESP_OK on success or error code otherwise.

const uint8_t ***esp_ble_mesh_node_get_local_net_key**(uint16_t net_idx)

This function is called by Node to get the local NetKey.

Parameters **net_idx** –**[in]** NetKey index.
Returns NetKey on success, or NULL on failure.

const uint8_t ***esp_ble_mesh_node_get_local_app_key**(uint16_t app_idx)

This function is called by Node to get the local AppKey.

Parameters **app_idx** –**[in]** AppKey index.
Returns AppKey on success, or NULL on failure.

esp_err_t **esp_ble_mesh_node_add_local_net_key**(const uint8_t net_key[16], uint16_t net_idx)

This function is called by Node to add a local NetKey.

Note: This function can only be called after the device is provisioned.

Parameters
- **net_key** –**[in]** NetKey to be added.
- **net_idx** –**[in]** NetKey Index.

Returns ESP_OK on success or error code otherwise.

esp_err_t **esp_ble_mesh_node_add_local_app_key**(const uint8_t app_key[16], uint16_t net_idx, uint16_t app_idx)

This function is called by Node to add a local AppKey.

Note: The net_idx must be an existing one. This function can only be called after the device is provisioned.

Parameters
- **app_key** –**[in]** AppKey to be added.
- **net_idx** –**[in]** NetKey Index.
- **app_idx** –**[in]** AppKey Index.

Returns ESP_OK on success or error code otherwise.

esp_err_t **esp_ble_mesh_node_bind_app_key_to_local_model**(uint16_t element_addr, uint16_t company_id, uint16_t model_id, uint16_t app_idx)

This function is called by Node to bind AppKey to model locally.

Note: If going to bind app_key with local vendor model, the company_id shall be set to 0xFFFF. This function can only be called after the device is provisioned.

Parameters

- **element_addr** –**[in]** Node local element address
- **company_id** –**[in]** Node local company id
- **model_id** –**[in]** Node local model id
- **app_idx** –**[in]** Node local appkey index

Returns ESP_OK on success or error code otherwise.

Low Power Operation (Updating)

Header File

- components/bt/esp_ble_mesh/api/core/include/esp_ble_mesh_low_power_api.h

Functions

esp_err_t **esp_ble_mesh_lpn_enable**(void)

Enable BLE Mesh device LPN functionality.

Note: This API enables LPN functionality. Once called, the proper Friend Request will be sent.

Returns ESP_OK on success or error code otherwise.

esp_err_t **esp_ble_mesh_lpn_disable**(bool force)

Disable BLE Mesh device LPN functionality.

Parameters **force** –**[in]** when disabling LPN functionality, use this flag to indicate whether directly clear corresponding information or just send friend clear to disable it if friendship has already been established.

Returns ESP_OK on success or error code otherwise.

esp_err_t **esp_ble_mesh_lpn_poll**(void)

LPN tries to poll messages from the Friend Node.

Note: The Friend Poll message is sent by a Low Power node to ask the Friend node to send a message that it has stored for the Low Power node. Users can call this API to send Friend Poll message manually. If this API is not invoked, the bottom layer of the Low Power node will send Friend Poll before the PollTimeout timer expires. If the corresponding Friend Update is received and MD is set to 0, which means there are no messages for the Low Power node, then the Low Power node will stop scanning.

Returns ESP_OK on success or error code otherwise.

Send/Publish Messages, add Local AppKey, etc.

Header File

- components/bt/esp_ble_mesh/api/core/include/esp_ble_mesh_networking_api.h

Functions

esp_err_t **esp_ble_mesh_register_custom_model_callback**(*esp_ble_mesh_model_cb_t* callback)

Register BLE Mesh callback for user-defined models' operations. This callback can report the following events generated for the user-defined models:

- Call back the messages received by user-defined client and server models to the application layer;
- If users call esp_ble_mesh_server/client_model_send, this callback notifies the application layer of the send_complete event;
- If user-defined client model sends a message that requires response, and the response message is received after the timer expires, the response message will be reported to the application layer as published by a peer device;
- If the user-defined client model fails to receive the response message during a specified period of time, a timeout event will be reported to the application layer.

Note: The client models (i.e. Config Client model, Health Client model, Generic Client models, Sensor Client model, Scene Client model and Lighting Client models) that have been realized internally have their specific register functions. For example, esp_ble_mesh_register_config_client_callback is the register function for Config Client Model.

Parameters **`callback`** –**[in]** Pointer to the callback function.
Returns ESP_OK on success or error code otherwise.

esp_err_t **`esp_ble_mesh_model_msg_opcode_init`** (uint8_t *data, uint32_t opcode)

Add the message opcode to the beginning of the model message before sending or publishing the model message.

Note: This API is only used to set the opcode of the message.

Parameters
- **`data`** –**[in]** Pointer to the message data.
- **`opcode`** –**[in]** The message opcode.

Returns ESP_OK on success or error code otherwise.

esp_err_t **`esp_ble_mesh_client_model_init`** (*esp_ble_mesh_model_t* *model)

Initialize the user-defined client model. All user-defined client models shall call this function to initialize the client model internal data. Node: Before calling this API, the op_pair_size and op_pair variabled within the user_data(defined using esp_ble_mesh_client_t_) of the client model need to be initialized.

Parameters **`model`** –**[in]** BLE Mesh Client model to which the message belongs.
Returns ESP_OK on success or error code otherwise.

esp_err_t **`esp_ble_mesh_client_model_deinit`** (*esp_ble_mesh_model_t* *model)

De-initialize the user-defined client model.

Note: This function shall be invoked before esp_ble_mesh_deinit() is called.

Parameters **`model`** –**[in]** Pointer of the Client model.
Returns ESP_OK on success or error code otherwise.

esp_err_t **`esp_ble_mesh_server_model_send_msg`** (*esp_ble_mesh_model_t* *model, *esp_ble_mesh_msg_ctx_t* *ctx, uint32_t opcode, uint16_t length, uint8_t *data)

Send server model messages(such as server model status messages).

Parameters
- **`model`** –**[in]** BLE Mesh Server Model to which the message belongs.
- **`ctx`** –**[in]** Message context, includes keys, TTL, etc.
- **`opcode`** –**[in]** Message opcode.
- **`length`** –**[in]** Message length (exclude the message opcode).
- **`data`** –**[in]** Parameters of Access Payload (exclude the message opcode) to be sent.

Returns ESP_OK on success or error code otherwise.

esp_err_t **esp_ble_mesh_client_model_send_msg**(*esp_ble_mesh_model_t* *model, *esp_ble_mesh_msg_ctx_t* *ctx, uint32_t opcode, uint16_t length, uint8_t *data, int32_t msg_timeout, bool need_rsp, *esp_ble_mesh_dev_role_t* device_role)

Send client model message (such as model get, set, etc).

Parameters

- **model** –**[in]** BLE Mesh Client Model to which the message belongs.
- **ctx** –**[in]** Message context, includes keys, TTL, etc.
- **opcode** –**[in]** Message opcode.
- **length** –**[in]** Message length (exclude the message opcode).
- **data** –**[in]** Parameters of the Access Payload (exclude the message opcode) to be sent.
- **msg_timeout** –**[in]** Time to get response to the message (in milliseconds).
- **need_rsp** –**[in]** TRUE if the opcode requires the peer device to reply, FALSE otherwise.
- **device_role** –**[in]** Role of the device (Node/Provisioner) that sends the message.

Returns ESP_OK on success or error code otherwise.

esp_err_t **esp_ble_mesh_model_publish**(*esp_ble_mesh_model_t* *model, uint32_t opcode, uint16_t length, uint8_t *data, *esp_ble_mesh_dev_role_t* device_role)

Send a model publication message.

Note: Before calling this function, the user needs to ensure that the model publication message (*esp_ble_mesh_model_pub_t::msg*) contains a valid message to be sent. And if users want to update the publishing message, this API should be called in ESP_BLE_MESH_MODEL_PUBLISH_UPDATE_EVT with the message updated.

Parameters

- **model** –**[in]** Mesh (client) Model publishing the message.
- **opcode** –**[in]** Message opcode.
- **length** –**[in]** Message length (exclude the message opcode).
- **data** –**[in]** Parameters of the Access Payload (exclude the message opcode) to be sent.
- **device_role** –**[in]** Role of the device (node/provisioner) publishing the message of the type esp_ble_mesh_dev_role_t.

Returns ESP_OK on success or error code otherwise.

esp_err_t **esp_ble_mesh_server_model_update_state**(*esp_ble_mesh_model_t* *model, *esp_ble_mesh_server_state_type_t* type, *esp_ble_mesh_server_state_value_t* *value)

Update a server model state value. If the model publication state is set properly (e.g. publish address is set to a valid address), it will publish corresponding status message.

Note: Currently this API is used to update bound state value, not for all server model states.

Parameters

- **model** –**[in]** Server model which is going to update the state.
- **type** –**[in]** Server model state type.
- **value** –**[in]** Server model state value.

Returns ESP_OK on success or error code otherwise.

esp_err_t **esp_ble_mesh_node_local_reset**(void)

Reset the provisioning procedure of the local BLE Mesh node.

Note: All provisioning information in this node will be deleted and the node needs to be reprovisioned. The API function esp_ble_mesh_node_prov_enable() needs to be called to start a new provisioning procedure.

Returns ESP_OK on success or error code otherwise.

esp_err_t **esp_ble_mesh_provisioner_set_node_name**(uint16_t index, const char *name)

This function is called to set the node (provisioned device) name.

Note: index is obtained from the parameters of ESP_BLE_MESH_PROVISIONER_PROV_COMPLETE_EVT.

Parameters

- **index** –**[in]** Index of the node in the node queue.
- **name** –**[in]** Name (end by '\0') to be set for the node.

Returns ESP_OK on success or error code otherwise.

const char ***esp_ble_mesh_provisioner_get_node_name**(uint16_t index)

This function is called to get the node (provisioned device) name.

Note: index is obtained from the parameters of ESP_BLE_MESH_PROVISIONER_PROV_COMPLETE_EVT.

Parameters **index** –**[in]** Index of the node in the node queue.
Returns Node name on success, or NULL on failure.

uint16_t **esp_ble_mesh_provisioner_get_node_index**(const char *name)

This function is called to get the node (provisioned device) index.

Parameters **name** –**[in]** Name of the node (end by '\0').
Returns Node index on success, or an invalid value (0xFFFF) on failure.

esp_err_t **esp_ble_mesh_provisioner_store_node_comp_data**(uint16_t unicast_addr, uint8_t *data, uint16_t length)

This function is called to store the Composition Data of the node.

Parameters

- **unicast_addr** –**[in]** Element address of the node
- **data** –**[in]** Pointer of Composition Data
- **length** –**[in]** Length of Composition Data

Returns ESP_OK on success or error code otherwise.

esp_ble_mesh_node_t ***esp_ble_mesh_provisioner_get_node_with_uuid**(const uint8_t uuid[16])

This function is called to get the provisioned node information with the node device uuid.

Parameters **uuid** –**[in]** Device UUID of the node
Returns Pointer of the node info struct or NULL on failure.

esp_ble_mesh_node_t ***esp_ble_mesh_provisioner_get_node_with_addr**(uint16_t unicast_addr)

This function is called to get the provisioned node information with the node unicast address.

Parameters **unicast_addr** –**[in]** Unicast address of the node
Returns Pointer of the node info struct or NULL on failure.

esp_ble_mesh_node_t ***esp_ble_mesh_provisioner_get_node_with_name**(const char *name)

This function is called to get the provisioned node information with the node name.

Parameters **name** –**[in]** Name of the node (end by '\0').
Returns Pointer of the node info struct or NULL on failure.

uint16_t **esp_ble_mesh_provisioner_get_prov_node_count**(void)

This function is called by Provisioner to get provisioned node count.

Returns Number of the provisioned nodes.

const *esp_ble_mesh_node_t* ****esp_ble_mesh_provisioner_get_node_table_entry**(void)

This function is called by Provisioner to get the entry of the node table.

Note: After invoking the function to get the entry of nodes, users can use the "for" loop combined with the macro CONFIG_BLE_MESH_MAX_PROV_NODES to get each node's information. Before trying to read the node's information, users need to check if the node exists, i.e. if the *(*esp_ble_mesh_node_t* **node) is NULL. For example: ``` const *esp_ble_mesh_node_t* **entry = esp_ble_mesh_provisioner_get_node_table_entry(); for (int i = 0; i < CONFIG_BLE_MESH_MAX_PROV_NODES; i++) { const *esp_ble_mesh_node_t* *node = entry[i]; if (node) { ……} } ```

Returns Pointer to the start of the node table.

esp_err_t **esp_ble_mesh_provisioner_delete_node_with_uuid**(const uint8_t uuid[16])

This function is called to delete the provisioned node information with the node device uuid.

Parameters **uuid** –**[in]** Device UUID of the node
Returns ESP_OK on success or error code otherwise.

esp_err_t **esp_ble_mesh_provisioner_delete_node_with_addr**(uint16_t unicast_addr)

This function is called to delete the provisioned node information with the node unicast address.

Parameters **unicast_addr** –**[in]** Unicast address of the node
Returns ESP_OK on success or error code otherwise.

esp_err_t **esp_ble_mesh_provisioner_add_local_app_key**(const uint8_t app_key[16], uint16_t net_idx, uint16_t app_idx)

This function is called to add a local AppKey for Provisioner.

Note: app_key: If set to NULL, app_key will be generated internally. net_idx: Should be an existing one. app_idx: If it is going to be generated internally, it should be set to 0xFFFF, and the new app_idx will be reported via an event.

Parameters

- **app_key** –**[in]** The app key to be set for the local BLE Mesh stack.
- **net_idx** –**[in]** The network key index.
- **app_idx** –**[in]** The app key index.

Returns ESP_OK on success or error code otherwise.

esp_err_t **esp_ble_mesh_provisioner_update_local_app_key**(const uint8_t app_key[16], uint16_t net_idx, uint16_t app_idx)

This function is used to update a local AppKey for Provisioner.

Parameters

- **app_key** –**[in]** Value of the AppKey.
- **net_idx** –**[in]** Corresponding NetKey Index.
- **app_idx** –**[in]** The AppKey Index

Returns ESP_OK on success or error code otherwise.

const uint8_t *`esp_ble_mesh_provisioner_get_local_app_key`(uint16_t net_idx, uint16_t app_idx)

This function is called by Provisioner to get the local app key value.

Parameters
- `net_idx` –**[in]** Network key index.
- `app_idx` –**[in]** Application key index.

Returns App key on success, or NULL on failure.

esp_err_t `esp_ble_mesh_provisioner_bind_app_key_to_local_model`(uint16_t element_addr, uint16_t app_idx, uint16_t model_id, uint16_t company_id)

This function is called by Provisioner to bind own model with proper app key.

Note: company_id: If going to bind app_key with local vendor model, company_id should be set to 0xFFFF.

Parameters
- `element_addr` –**[in]** Provisioner local element address
- `app_idx` –**[in]** Provisioner local appkey index
- `model_id` –**[in]** Provisioner local model id
- `company_id` –**[in]** Provisioner local company id

Returns ESP_OK on success or error code otherwise.

esp_err_t `esp_ble_mesh_provisioner_add_local_net_key`(const uint8_t net_key[16], uint16_t net_idx)

This function is called by Provisioner to add local network key.

Note: net_key: If set to NULL, net_key will be generated internally. net_idx: If it is going to be generated internally, it should be set to 0xFFFF, and the new net_idx will be reported via an event.

Parameters
- `net_key` –**[in]** The network key to be added to the Provisioner local BLE Mesh stack.
- `net_idx` –**[in]** The network key index.

Returns ESP_OK on success or error code otherwise.

esp_err_t `esp_ble_mesh_provisioner_update_local_net_key`(const uint8_t net_key[16], uint16_t net_idx)

This function is called by Provisioner to update a local network key.

Parameters
- `net_key` –**[in]** Value of the NetKey.
- `net_idx` –**[in]** The NetKey Index.

Returns ESP_OK on success or error code otherwise.

const uint8_t *`esp_ble_mesh_provisioner_get_local_net_key`(uint16_t net_idx)

This function is called by Provisioner to get the local network key value.

Parameters `net_idx` –**[in]** Network key index.

Returns Network key on success, or NULL on failure.

esp_err_t `esp_ble_mesh_provisioner_recv_heartbeat`(bool enable)

This function is called by Provisioner to enable or disable receiving heartbeat messages.

Note: If enabling receiving heartbeat message successfully, the filter will be an empty rejectlist by default, which means all heartbeat messages received by the Provisioner will be reported to the application layer.

Parameters **enable** –**[in]** Enable or disable receiving heartbeat messages.
Returns ESP_OK on success or error code otherwise.

esp_err_t **esp_ble_mesh_provisioner_set_heartbeat_filter_type**(uint8_t type)

This function is called by Provisioner to set the heartbeat filter type.

Note: 1. If the filter type is not the same with the current value, then all the filter entries will be cleaned.

a. If the previous type is rejectlist, and changed to acceptlist, then the filter will be an empty acceptlist, which means no heartbeat messages will be reported. Users need to add SRC or DST into the filter entry, then heartbeat messages from the SRC or to the DST will be reported.

Parameters **type** –**[in]** Heartbeat filter type (acceptlist or rejectlist).
Returns ESP_OK on success or error code otherwise.

esp_err_t **esp_ble_mesh_provisioner_set_heartbeat_filter_info**(uint8_t op, *esp_ble_mesh_heartbeat_filter_info_t* *info)

This function is called by Provisioner to add or remove a heartbeat filter entry.

a. If the operation is "REMOVE", the "hb_src" can be set to the SRC (can only be a unicast address) of heartbeat messages, and the "hb_dst" can be set to the DST (unicast address or group address), at least one of them needs to be set.
   - The filter entry with the same SRC or DST will be removed.

Note: 1. If the operation is "ADD", the "hb_src" can be set to the SRC (can only be a unicast address) of heartbeat messages, and the "hb_dst" can be set to the DST (unicast address or group address), at least one of them needs to be set.

- If only one of them is set, the filter entry will only use the configured SRC or DST to filter heartbeat messages.
- If both of them are set, the SRC and DST will both be used to decide if a heartbeat message will be handled.
- If SRC or DST already exists in some filter entry, then the corresponding entry will be cleaned firstly, then a new entry will be allocated to store the information.

Parameters
- **op** –**[in]** Add or REMOVE
- **info** –**[in]** Heartbeat filter entry information, including: hb_src - Heartbeat source address; hb_dst - Heartbeat destination address;

Returns ESP_OK on success or error code otherwise.

esp_err_t **esp_ble_mesh_provisioner_direct_erase_settings**(void)

This function is called by Provisioner to directly erase the mesh information from nvs namespace.

Note: This function can be invoked when the mesh stack is not initialized or has been de-initialized.

Returns ESP_OK on success or error code otherwise.

esp_err_t **esp_ble_mesh_provisioner_open_settings_with_index**(uint8_t index)

This function is called by Provisioner to open a nvs namespace for storing mesh information.

Note: Before open another nvs namespace, the previously opened nvs namespace must be closed firstly.

Parameters **index** –**[in]** Settings index.
Returns ESP_OK on success or error code otherwise.

esp_err_t **esp_ble_mesh_provisioner_open_settings_with_uid**(const char *uid)

This function is called by Provisioner to open a nvs namespace for storing mesh information.

Note: Before open another nvs namespace, the previously opened nvs namespace must be closed firstly.

Parameters **uid** –**[in]** Settings user id.
Returns ESP_OK on success or error code otherwise.

esp_err_t **esp_ble_mesh_provisioner_close_settings_with_index**(uint8_t index, bool erase)

This function is called by Provisioner to close a nvs namespace which is opened previously for storing mesh information.

Note: 1. Before closing the nvs namespace, it must be open.

a. When the function is invoked, the Provisioner functionality will be disabled firstly, and: a) If the "erase" flag is set to false, the mesh information will be cleaned (e.g. removing NetKey, AppKey, nodes, etc) from the mesh stack. b) If the "erase" flag is set to true, the mesh information stored in the nvs namespace will also be erased besides been cleaned from the mesh stack.
b. If Provisioner tries to work properly again, we can invoke the open function to open a new nvs namespace or a previously added one, and restore the mesh information from it if not erased.
c. The working process shall be as following: a) Open settings A b) Start to provision and control nodes c) Close settings A d) Open settings B e) Start to provision and control other nodes f) Close settings B g) …….

Parameters

- **index** –**[in]** Settings index.
- **erase** –**[in]** Indicate if erasing mesh information.

Returns ESP_OK on success or error code otherwise.

esp_err_t **esp_ble_mesh_provisioner_close_settings_with_uid**(const char *uid, bool erase)

This function is called by Provisioner to close a nvs namespace which is opened previously for storing mesh information.

Note: 1. Before closing the nvs namespace, it must be open.

a. When the function is invoked, the Provisioner functionality will be disabled firstly, and: a) If the "erase" flag is set to false, the mesh information will be cleaned (e.g. removing NetKey, AppKey, nodes, etc) from the mesh stack. b) If the "erase" flag is set to true, the mesh information stored in the nvs namespace will also be erased besides been cleaned from the mesh stack.
b. If Provisioner tries to work properly again, we can invoke the open function to open a new nvs namespace or a previously added one, and restore the mesh information from it if not erased.
c. The working process shall be as following: a) Open settings A b) Start to provision and control nodes c) Close settings A d) Open settings B e) Start to provision and control other nodes f) Close settings B g) …….

Parameters
- **uid** –**[in]** Settings user id.
- **erase** –**[in]** Indicate if erasing mesh information.

Returns ESP_OK on success or error code otherwise.

esp_err_t **esp_ble_mesh_provisioner_delete_settings_with_index**(uint8_t index)

This function is called by Provisioner to erase the mesh information and settings user id from a nvs namespace.

Note: When this function is called, the nvs namespace must not be open. This function is used to erase the mesh information and settings user id which are not used currently.

Parameters **index** –**[in]** Settings index.
Returns ESP_OK on success or error code otherwise.

esp_err_t **esp_ble_mesh_provisioner_delete_settings_with_uid**(const char *uid)

This function is called by Provisioner to erase the mesh information and settings user id from a nvs namespace.

Note: When this function is called, the nvs namespace must not be open. This function is used to erase the mesh information and settings user id which are not used currently.

Parameters **uid** –**[in]** Settings user id.
Returns ESP_OK on success or error code otherwise.

const char ***esp_ble_mesh_provisioner_get_settings_uid**(uint8_t index)

This function is called by Provisioner to get settings user id.

Parameters **index** –**[in]** Settings index.
Returns Setting user id on success or NULL on failure.

uint8_t **esp_ble_mesh_provisioner_get_settings_index**(const char *uid)

This function is called by Provisioner to get settings index.

Parameters **uid** –**[in]** Settings user id.
Returns Settings index.

uint8_t **esp_ble_mesh_provisioner_get_free_settings_count**(void)

This function is called by Provisioner to get the number of free settings user id.

Returns Number of free settings user id.

const uint8_t ***esp_ble_mesh_get_fast_prov_app_key**(uint16_t net_idx, uint16_t app_idx)

This function is called to get fast provisioning application key.

Parameters
- **net_idx** –**[in]** Network key index.
- **app_idx** –**[in]** Application key index.

Returns Application key on success, or NULL on failure.

Type Definitions

typedef void (***esp_ble_mesh_model_cb_t**)(*esp_ble_mesh_model_cb_event_t* event, *esp_ble_mesh_model_cb_param_t* *param)

: event, event code of user-defined model events; param, parameters of user-defined model events

ESP-BLE-MESH Node/Provisioner Provisioning

Header File

- components/bt/esp_ble_mesh/api/core/include/esp_ble_mesh_provisioning_api.h

Functions

esp_err_t **esp_ble_mesh_register_prov_callback**(*esp_ble_mesh_prov_cb_t* callback)

Register BLE Mesh provisioning callback.

Parameters **callback** –**[in]** Pointer to the callback function.
Returns ESP_OK on success or error code otherwise.

bool **esp_ble_mesh_node_is_provisioned**(void)

Check if a device has been provisioned.

Returns TRUE if the device is provisioned, FALSE if the device is unprovisioned.

esp_err_t **esp_ble_mesh_node_prov_enable**(*esp_ble_mesh_prov_bearer_t* bearers)

Enable specific provisioning bearers to get the device ready for provisioning.

Note: PB-ADV: send unprovisioned device beacon. PB-GATT: send connectable advertising packets.

Parameters **bearers** –Bit-wise OR of provisioning bearers.
Returns ESP_OK on success or error code otherwise.

esp_err_t **esp_ble_mesh_node_prov_disable**(*esp_ble_mesh_prov_bearer_t* bearers)

Disable specific provisioning bearers to make a device inaccessible for provisioning.

Parameters **bearers** –Bit-wise OR of provisioning bearers.
Returns ESP_OK on success or error code otherwise.

esp_err_t **esp_ble_mesh_node_set_oob_pub_key**(uint8_t pub_key_x[32], uint8_t pub_key_y[32], uint8_t private_key[32])

Unprovisioned device set own oob public key & private key pair.

Note: In order to avoid suffering brute-forcing attack (CVE-2020-26559). The Bluetooth SIG recommends that potentially vulnerable mesh provisioners use an out-of-band mechanism to exchange the public keys. So as an unprovisioned device, it should use this function to input the Public Key exchanged through the out-of-band mechanism.

Parameters
- **pub_key_x** –**[in]** Unprovisioned device's Public Key X
- **pub_key_y** –**[in]** Unprovisioned device's Public Key Y
- **private_key** –**[in]** Unprovisioned device's Private Key

Returns ESP_OK on success or error code otherwise.

esp_err_t **esp_ble_mesh_node_input_number**(uint32_t number)

Provide provisioning input OOB number.

Note: This is intended to be called if the user has received ESP_BLE_MESH_NODE_PROV_INPUT_EVT with ESP_BLE_MESH_ENTER_NUMBER as the action.

Parameters **number** –**[in]** Number input by device.
Returns ESP_OK on success or error code otherwise.

esp_err_t **esp_ble_mesh_node_input_string**(const char *string)

Provide provisioning input OOB string.

Note: This is intended to be called if the user has received ESP_BLE_MESH_NODE_PROV_INPUT_EVT with ESP_BLE_MESH_ENTER_STRING as the action.

Parameters **string** –**[in]** String input by device.
Returns ESP_OK on success or error code otherwise.

esp_err_t **esp_ble_mesh_set_unprovisioned_device_name**(const char *name)

Using this function, an unprovisioned device can set its own device name, which will be broadcasted in its advertising data.

Note: This API applicable to PB-GATT mode only by setting the name to the scan response data, it doesn't apply to PB-ADV mode.

Parameters **name** –**[in]** Unprovisioned device name
Returns ESP_OK on success or error code otherwise.

esp_err_t **esp_ble_mesh_provisioner_read_oob_pub_key**(uint8_t link_idx, uint8_t pub_key_x[32], uint8_t pub_key_y[32])

Provisioner inputs unprovisioned device's oob public key.

Note: In order to avoid suffering brute-forcing attack (CVE-2020-26559). The Bluetooth SIG recommends that potentially vulnerable mesh provisioners use an out-of-band mechanism to exchange the public keys.

Parameters
- **link_idx** –**[in]** The provisioning link index
- **pub_key_x** –**[in]** Unprovisioned device's Public Key X
- **pub_key_y** –**[in]** Unprovisioned device's Public Key Y

Returns ESP_OK on success or error code otherwise.

esp_err_t **esp_ble_mesh_provisioner_input_string**(const char *string, uint8_t link_idx)

Provide provisioning input OOB string.

This is intended to be called after the *esp_ble_mesh_prov_t* prov_input_num callback has been called with ESP_BLE_MESH_ENTER_STRING as the action.

Parameters
- **string** –**[in]** String input by Provisioner.
- **link_idx** –**[in]** The provisioning link index.

Returns ESP_OK on success or error code otherwise.

esp_err_t **esp_ble_mesh_provisioner_input_number**(uint32_t number, uint8_t link_idx)

Provide provisioning input OOB number.

This is intended to be called after the *esp_ble_mesh_prov_t* prov_input_num callback has been called with ESP_BLE_MESH_ENTER_NUMBER as the action.

Parameters
- **number** –**[in]** Number input by Provisioner.
- **link_idx** –**[in]** The provisioning link index.

Returns ESP_OK on success or error code otherwise.

esp_err_t **esp_ble_mesh_provisioner_prov_enable**(*esp_ble_mesh_prov_bearer_t* bearers)

Enable one or more provisioning bearers.

Note: PB-ADV: Enable BLE scan. PB-GATT: Initialize corresponding BLE Mesh Proxy info.

Parameters **bearers** –**[in]** Bit-wise OR of provisioning bearers.
Returns ESP_OK on success or error code otherwise.

esp_err_t **esp_ble_mesh_provisioner_prov_disable**(*esp_ble_mesh_prov_bearer_t* bearers)

Disable one or more provisioning bearers.

Note: PB-ADV: Disable BLE scan. PB-GATT: Break any existing BLE Mesh Provisioning connections.

Parameters **bearers** –**[in]** Bit-wise OR of provisioning bearers.
Returns ESP_OK on success or error code otherwise.

esp_err_t **esp_ble_mesh_provisioner_add_unprov_dev**(*esp_ble_mesh_unprov_dev_add_t* *add_dev, *esp_ble_mesh_dev_add_flag_t* flags)

Add unprovisioned device info to the unprov_dev queue.

Note: : 1. Currently address type only supports public address and static random address.

a. If device UUID and/or device address as well as address type already exist in the device queue, but the bearer is different from the existing one, add operation will also be successful and it will update the provision bearer supported by the device.
b. For example, if the Provisioner wants to add an unprovisioned device info before receiving its unprovisioned device beacon or Mesh Provisioning advertising packets, the Provisioner can use this API to add the device info with each one or both of device UUID and device address added. When the Provisioner gets the device' s advertising packets, it will start provisioning the device internally.
   - In this situation, the Provisioner can set bearers with each one or both of ESP_BLE_MESH_PROV_ADV and ESP_BLE_MESH_PROV_GATT enabled, and cannot set flags with ADD_DEV_START_PROV_NOW_FLAG enabled.
c. Another example is when the Provisioner receives the unprovisioned device' s beacon or Mesh Provisioning advertising packets, the advertising packets will be reported on to the application layer using the callback registered by the function esp_ble_mesh_register_prov_callback. And in the callback, the Provisioner can call this API to start provisioning the device.
   - If the Provisioner uses PB-ADV to provision, either one or both of device UUID and device address can be added, bearers shall be set with ESP_BLE_MESH_PROV_ADV enabled and the flags shall be set with ADD_DEV_START_PROV_NOW_FLAG enabled.
   - If the Provisioner uses PB-GATT to provision, both the device UUID and device address need to be added, bearers shall be set with ESP_BLE_MESH_PROV_GATT enabled, and the flags shall be set with ADD_DEV_START_PROV_NOW_FLAG enabled.
   - If the Provisioner just wants to store the unprovisioned device info when receiving its advertising packets and start to provision it the next time (e.g. after receiving its advertising packets again), then it can add the device info with either one or both of device UUID and device address included. Bearers can be set with either one or both of ESP_BLE_MESH_PROV_ADV and ESP_BLE_MESH_PROV_GATT enabled (recommend to enable the bearer which will receive its advertising packets, because if the other bearer is enabled, the Provisioner is not aware if the device supports the bearer), and flags cannot be set with ADD_DEV_START_PROV_NOW_FLAG enabled.
   - Note: ESP_BLE_MESH_PROV_ADV, ESP_BLE_MESH_PROV_GATT and ADD_DEV_START_PROV_NOW_FLAG can not be enabled at the same time.

Parameters

- **add_dev** –**[in]** Pointer to a struct containing the device information
- **flags** –**[in]** Flags indicate several operations on the device information
  - Remove device information from queue after device has been provisioned (BIT0)
  - Start provisioning immediately after device is added to queue (BIT1)
  - Device can be removed if device queue is full (BIT2)

Returns ESP_OK on success or error code otherwise.

esp_err_t **esp_ble_mesh_provisioner_prov_device_with_addr**(const uint8_t uuid[16], *esp_ble_mesh_bd_addr_t* addr, *esp_ble_mesh_addr_type_t* addr_type, *esp_ble_mesh_prov_bearer_t* bearer, uint16_t oob_info, uint16_t unicast_addr)

Provision an unprovisioned device and assign a fixed unicast address for it in advance.

Note: : 1. Currently address type only supports public address and static random address.

a. Bearer must be equal to ESP_BLE_MESH_PROV_ADV or ESP_BLE_MESH_PROV_GATT, since Provisioner will start to provision a device immediately once this function is invoked. And the input bearer must be identical with the one within the parameters of the ESP_BLE_MESH_PROVISIONER_RECV_UNPROV_ADV_PKT_EVT event.
b. If this function is used by a Provisioner to provision devices, the application should take care of the assigned unicast address and avoid overlap of the unicast addresses of different nodes.
c. Recommend to use only one of the functions "esp_ble_mesh_provisioner_add_unprov_dev" and "esp_ble_mesh_provisioner_prov_device_with_addr" by a Provisioner.

Parameters

- **uuid** –**[in]** Device UUID of the unprovisioned device
- **addr** –**[in]** Device address of the unprovisioned device
- **addr_type** –**[in]** Device address type of the unprovisioned device
- **bearer** –**[in]** Provisioning bearer going to be used by Provisioner
- **oob_info** –**[in]** OOB info of the unprovisioned device
- **unicast_addr** –**[in]** Unicast address going to be allocated for the unprovisioned device

Returns Zero on success or (negative) error code otherwise.

esp_err_t **esp_ble_mesh_provisioner_delete_dev**(*esp_ble_mesh_device_delete_t* *del_dev)

Delete device from queue, and reset current provisioning link with the device.

Note: If the device is in the queue, remove it from the queue; if the device is being provisioned, terminate the provisioning procedure. Either one of the device address or device UUID can be used as input.

Parameters **del_dev** –**[in]** Pointer to a struct containing the device information.

Returns ESP_OK on success or error code otherwise.

esp_err_t **esp_ble_mesh_provisioner_set_dev_uuid_match**(const uint8_t *match_val, uint8_t match_len, uint8_t offset, bool prov_after_match)

This function is called by Provisioner to set the part of the device UUID to be compared before starting to provision.

Parameters

- **match_val** –**[in]** Value to be compared with the part of the device UUID.
- **match_len** –**[in]** Length of the compared match value.

- **offset** –**[in]** Offset of the device UUID to be compared (based on zero).
- **prov_after_match** –**[in]** Flag used to indicate whether provisioner should start to provision the device immediately if the part of the UUID matches.

Returns ESP_OK on success or error code otherwise.

esp_err_t **esp_ble_mesh_provisioner_set_prov_data_info**(*esp_ble_mesh_prov_data_info_t* *prov_data_info)

This function is called by Provisioner to set provisioning data information before starting to provision.

Parameters **prov_data_info** –**[in]** Pointer to a struct containing net_idx or flags or iv_index.
Returns ESP_OK on success or error code otherwise.

esp_err_t **esp_ble_mesh_provisioner_set_static_oob_value**(const uint8_t *value, uint8_t length)

This function is called by Provisioner to set static oob value used for provisioning.

AuthValues selected using a cryptographically secure random or pseudorandom number generator and having the maximum permitted entropy (128-bits) will be most difficult to brute-force. AuthValues with reduced entropy or generated in a predictable manner will not grant the same level of protection against this vulnerability. Selecting a new AuthValue with each provisioning attempt can also make it more difficult to launch a brute-force attack by requiring the attacker to restart the search with each provisioning attempt (CVE-2020-26556).

Note: The Bluetooth SIG recommends that mesh implementations enforce a randomly selected AuthValue using all of the available bits, where permitted by the implementation. A large entropy helps ensure that a brute-force of the AuthValue, even a static AuthValue, cannot normally be completed in a reasonable time (CVE-2020-26557).

Parameters

- **value** –**[in]** Pointer to the static oob value.
- **length** –**[in]** Length of the static oob value.

Returns ESP_OK on success or error code otherwise.

esp_err_t **esp_ble_mesh_provisioner_set_primary_elem_addr**(uint16_t addr)

This function is called by Provisioner to set own Primary element address.

Note: This API must be invoked when BLE Mesh initialization is completed successfully, and can be invoked before Provisioner functionality is enabled. Once this API is invoked successfully, the prov_unicast_addr value in the struct *esp_ble_mesh_prov_t* will be ignored, and Provisioner will use this address as its own primary element address. And if the unicast address going to assigned for the next unprovisioned device is smaller than the input address + element number of Provisioner, then the address for the next unprovisioned device will be recalculated internally.

Parameters **addr** –**[in]** Unicast address of the Primary element of Provisioner.
Returns ESP_OK on success or error code otherwise.

esp_err_t **esp_ble_mesh_set_fast_prov_info**(*esp_ble_mesh_fast_prov_info_t* *fast_prov_info)

This function is called to set provisioning data information before starting fast provisioning.

Parameters **fast_prov_info** –**[in]** Pointer to a struct containing unicast address range, net_idx, etc.
Returns ESP_OK on success or error code otherwise.

esp_err_t **esp_ble_mesh_set_fast_prov_action**(*esp_ble_mesh_fast_prov_action_t* action)

This function is called to start/suspend/exit fast provisioning.

Parameters **action** –**[in]** fast provisioning action (i.e. enter, suspend, exit).

Returns ESP_OK on success or error code otherwise.

Type Definitions

typedef void (***esp_ble_mesh_prov_cb_t**)(*esp_ble_mesh_prov_cb_event_t* event, *esp_ble_mesh_prov_cb_param_t* *param)

: event, event code of provisioning events; param, parameters of provisioning events

typedef void (***esp_ble_mesh_prov_adv_cb_t**)(const *esp_ble_mesh_bd_addr_t* addr, const *esp_ble_mesh_addr_type_t* addr_type, const uint8_t adv_type, const uint8_t *dev_uuid, uint16_t oob_info, *esp_ble_mesh_prov_bearer_t* bearer)

Callback for Provisioner that received advertising packets from unprovisioned devices which are not in the unprovisioned device queue.

Report on the unprovisioned device beacon and mesh provisioning service adv data to application.

Param addr **[in]** Pointer to the unprovisioned device address.
Param addr_type **[in]** Unprovisioned device address type.
Param adv_type **[in]** Adv packet type(ADV_IND or ADV_NONCONN_IND).
Param dev_uuid **[in]** Unprovisioned device UUID pointer.
Param oob_info **[in]** OOB information of the unprovisioned device.
Param bearer **[in]** Adv packet received from PB-GATT or PB-ADV bearer.

ESP-BLE-MESH GATT Proxy Server

Header File

- components/bt/esp_ble_mesh/api/core/include/esp_ble_mesh_proxy_api.h

Functions

esp_err_t **esp_ble_mesh_proxy_identity_enable**(void)

Enable advertising with Node Identity.

Note: This API requires that GATT Proxy support be enabled. Once called, each subnet starts advertising using Node Identity for the next 60 seconds, and after 60s Network ID will be advertised. Under normal conditions, the BLE Mesh Proxy Node Identity and Network ID advertising will be enabled automatically by BLE Mesh stack after the device is provisioned.

Returns ESP_OK on success or error code otherwise.

esp_err_t **esp_ble_mesh_proxy_gatt_enable**(void)

Enable BLE Mesh GATT Proxy Service.

Returns ESP_OK on success or error code otherwise.

esp_err_t **esp_ble_mesh_proxy_gatt_disable**(void)

Disconnect the BLE Mesh GATT Proxy connection if there is any, and disable the BLE Mesh GATT Proxy Service.

Returns ESP_OK on success or error code otherwise.

esp_err_t **esp_ble_mesh_proxy_client_connect**(*esp_ble_mesh_bd_addr_t* addr, *esp_ble_mesh_addr_type_t* addr_type, uint16_t net_idx)

Proxy Client creates a connection with the Proxy Server.

Parameters

- **addr** –**[in]** Device address of the Proxy Server.
- **addr_type** –**[in]** Device address type(public or static random).
- **net_idx** –**[in]** NetKey Index related with Network ID in the Mesh Proxy advertising packet.

Returns ESP_OK on success or error code otherwise.

esp_err_t **esp_ble_mesh_proxy_client_disconnect**(uint8_t conn_handle)

Proxy Client terminates a connection with the Proxy Server.

Parameters **conn_handle** –**[in]** Proxy connection handle.
Returns ESP_OK on success or error code otherwise.

esp_err_t **esp_ble_mesh_proxy_client_set_filter_type**(uint8_t conn_handle, uint16_t net_idx, *esp_ble_mesh_proxy_filter_type_t* filter_type)

Proxy Client sets the filter type of the Proxy Server.

Parameters
- **conn_handle** –**[in]** Proxy connection handle.
- **net_idx** –**[in]** Corresponding NetKey Index.
- **filter_type** –**[in]** whitelist or blacklist.

Returns ESP_OK on success or error code otherwise.

esp_err_t **esp_ble_mesh_proxy_client_add_filter_addr**(uint8_t conn_handle, uint16_t net_idx, uint16_t *addr, uint16_t addr_num)

Proxy Client adds address to the Proxy Server filter list.

Parameters
- **conn_handle** –**[in]** Proxy connection handle.
- **net_idx** –**[in]** Corresponding NetKey Index.
- **addr** –**[in]** Pointer to the filter address.
- **addr_num** –**[in]** Number of the filter address.

Returns ESP_OK on success or error code otherwise.

esp_err_t **esp_ble_mesh_proxy_client_remove_filter_addr**(uint8_t conn_handle, uint16_t net_idx, uint16_t *addr, uint16_t addr_num)

Proxy Client removes address from the Proxy Server filter list.

Parameters
- **conn_handle** –**[in]** Proxy connection handle.
- **net_idx** –**[in]** Corresponding NetKey Index.
- **addr** –**[in]** Pointer to the filter address.
- **addr_num** –**[in]** Number of the filter address.

Returns ESP_OK on success or error code otherwise.

ESP-BLE-MESH Models API Reference

This section contains ESP-BLE-MESH Model related APIs, event types, event parameters, etc.

There are six categories of models:

- *Configuration Client/Server Models*
- *Health Client/Server Models*
- *Generic Client/Server Models*
- *Sensor Client/Server Models*
- *Time and Scenes Client/Server Models*
- *Lighting Client/Server Models*

Note: Definitions related to Server Models are being updated, and will be released soon.

Configuration Client/Server Models

Header File

- components/bt/esp_ble_mesh/api/models/include/esp_ble_mesh_config_model_api.h

Functions

esp_err_t **esp_ble_mesh_register_config_client_callback**(*esp_ble_mesh_cfg_client_cb_t* callback)

Register BLE Mesh Config Client Model callback.

Parameters **callback** –**[in]** Pointer to the callback function.
Returns ESP_OK on success or error code otherwise.

esp_err_t **esp_ble_mesh_register_config_server_callback**(*esp_ble_mesh_cfg_server_cb_t* callback)

Register BLE Mesh Config Server Model callback.

Parameters **callback** –**[in]** Pointer to the callback function.
Returns ESP_OK on success or error code otherwise.

esp_err_t **esp_ble_mesh_config_client_get_state**(*esp_ble_mesh_client_common_param_t* *params, *esp_ble_mesh_cfg_client_get_state_t* *get_state)

Get the value of Config Server Model states using the Config Client Model get messages.

Note: If you want to find the opcodes and corresponding meanings accepted by this API, please refer to esp_ble_mesh_opcode_config_client_get_t in esp_ble_mesh_defs.h

---

Parameters

- **params** –**[in]** Pointer to BLE Mesh common client parameters.
- **get_state** –**[in]** Pointer to a union, each kind of opcode corresponds to one structure inside. Shall not be set to NULL.

Returns ESP_OK on success or error code otherwise.

esp_err_t **esp_ble_mesh_config_client_set_state**(*esp_ble_mesh_client_common_param_t* *params, *esp_ble_mesh_cfg_client_set_state_t* *set_state)

Set the value of the Configuration Server Model states using the Config Client Model set messages.

Note: If you want to find the opcodes and corresponding meanings accepted by this API, please refer to esp_ble_mesh_opcode_config_client_set_t in esp_ble_mesh_defs.h

---

Parameters

- **params** –**[in]** Pointer to BLE Mesh common client parameters.
- **set_state** –**[in]** Pointer to a union, each kind of opcode corresponds to one structure inside. Shall not be set to NULL.

Returns ESP_OK on success or error code otherwise.

Unions

union **esp_ble_mesh_cfg_client_get_state_t**

#include <esp_ble_mesh_config_model_api.h> For ESP_BLE_MESH_MODEL_OP_BEACON_GET ESP_BLE_MESH_MODEL_OP_COMPOSITION_DATA_GET ESP_BLE_MESH_MODEL_OP_DEFAULT_TTL_GET ESP_BLE_MESH_MODEL_OP_GATT_PROXY_GET ESP_BLE_MESH_MODEL_OP_RELAY_GET

ESP_BLE_MESH_MODEL_OP_MODEL_PUB_GET ESP_BLE_MESH_MODEL_OP_FRIEND_GET ESP_BLE_MESH_MODEL_OP_HEARTBEAT_PUB_GET ESP_BLE_MESH_MODEL_OP_HEARTBEAT_SUB_GET the get_state parameter in the esp_ble_mesh_config_client_get_state function should not be set to NULL.

Public Members

esp_ble_mesh_cfg_model_pub_get_t **model_pub_get**

For ESP_BLE_MESH_MODEL_OP_MODEL_PUB_GET.

esp_ble_mesh_cfg_composition_data_get_t **comp_data_get**

For ESP_BLE_MESH_MODEL_OP_COMPOSITION_DATA_GET.

esp_ble_mesh_cfg_sig_model_sub_get_t **sig_model_sub_get**

For ESP_BLE_MESH_MODEL_OP_SIG_MODEL_SUB_GET

esp_ble_mesh_cfg_vnd_model_sub_get_t **vnd_model_sub_get**

For ESP_BLE_MESH_MODEL_OP_VENDOR_MODEL_SUB_GET

esp_ble_mesh_cfg_app_key_get_t **app_key_get**

For ESP_BLE_MESH_MODEL_OP_APP_KEY_GET.

esp_ble_mesh_cfg_node_identity_get_t **node_identity_get**

For ESP_BLE_MESH_MODEL_OP_NODE_IDENTITY_GET.

esp_ble_mesh_cfg_sig_model_app_get_t **sig_model_app_get**

For ESP_BLE_MESH_MODEL_OP_SIG_MODEL_APP_GET

esp_ble_mesh_cfg_vnd_model_app_get_t **vnd_model_app_get**

For ESP_BLE_MESH_MODEL_OP_VENDOR_MODEL_APP_GET

esp_ble_mesh_cfg_kr_phase_get_t **kr_phase_get**

For ESP_BLE_MESH_MODEL_OP_KEY_REFRESH_PHASE_GET

esp_ble_mesh_cfg_lpn_polltimeout_get_t **lpn_pollto_get**

For ESP_BLE_MESH_MODEL_OP_LPN_POLLTIMEOUT_GET

union **esp_ble_mesh_cfg_client_set_state_t**

#include <esp_ble_mesh_config_model_api.h> For ESP_BLE_MESH_MODEL_OP_BEACON_SET ESP_BLE_MESH_MODEL_OP_DEFAULT_TTL_SET ESP_BLE_MESH_MODEL_OP_GATT_PROXY_SET ESP_BLE_MESH_MODEL_OP_RELAY_SET ESP_BLE_MESH_MODEL_OP_MODEL_PUB_SET ESP_BLE_MESH_MODEL_OP_MODEL_SUB_ADD ESP_BLE_MESH_MODEL_OP_MODEL_SUB_VIRTUAL_ADDR ESP_BLE_MESH_MODEL_OP_MODEL_SUB_DELETE ESP_BLE_MESH_MODEL_OP_MODEL_SUB_VIRTUAL_AD ESP_BLE_MESH_MODEL_OP_MODEL_SUB_OVERWRITE ESP_BLE_MESH_MODEL_OP_MODEL_SUB_VIRTUA ESP_BLE_MESH_MODEL_OP_NET_KEY_ADD ESP_BLE_MESH_MODEL_OP_APP_KEY_ADD ESP_BLE_MESH_MODEL_OP_MODEL_APP_BIND ESP_BLE_MESH_MODEL_OP_NODE_RESET ESP_BLE_MESH_MODEL_OP_FRIEND_SET ESP_BLE_MESH_MODEL_OP_HEARTBEAT_PUB_SET ESP_BLE_MESH_MODEL_OP_HEARTBEAT_SUB_SET the set_state parameter in the esp_ble_mesh_config_client_set_state function should not be set to NULL.

Public Members

esp_ble_mesh_cfg_beacon_set_t **beacon_set**

For ESP_BLE_MESH_MODEL_OP_BEACON_SET

esp_ble_mesh_cfg_default_ttl_set_t **default_ttl_set**

For ESP_BLE_MESH_MODEL_OP_DEFAULT_TTL_SET

esp_ble_mesh_cfg_friend_set_t **friend_set**

For ESP_BLE_MESH_MODEL_OP_FRIEND_SET

esp_ble_mesh_cfg_gatt_proxy_set_t **gatt_proxy_set**

For ESP_BLE_MESH_MODEL_OP_GATT_PROXY_SET

esp_ble_mesh_cfg_relay_set_t **relay_set**

For ESP_BLE_MESH_MODEL_OP_RELAY_SET

esp_ble_mesh_cfg_net_key_add_t **net_key_add**

For ESP_BLE_MESH_MODEL_OP_NET_KEY_ADD

esp_ble_mesh_cfg_app_key_add_t **app_key_add**

For ESP_BLE_MESH_MODEL_OP_APP_KEY_ADD

esp_ble_mesh_cfg_model_app_bind_t **model_app_bind**

For ESP_BLE_MESH_MODEL_OP_MODEL_APP_BIND

esp_ble_mesh_cfg_model_pub_set_t **model_pub_set**

For ESP_BLE_MESH_MODEL_OP_MODEL_PUB_SET

esp_ble_mesh_cfg_model_sub_add_t **model_sub_add**

For ESP_BLE_MESH_MODEL_OP_MODEL_SUB_ADD

esp_ble_mesh_cfg_model_sub_delete_t **model_sub_delete**

For ESP_BLE_MESH_MODEL_OP_MODEL_SUB_DELETE

esp_ble_mesh_cfg_model_sub_overwrite_t **model_sub_overwrite**

For ESP_BLE_MESH_MODEL_OP_MODEL_SUB_OVERWRITE

esp_ble_mesh_cfg_model_sub_va_add_t **model_sub_va_add**

For ESP_BLE_MESH_MODEL_OP_MODEL_SUB_VIRTUAL_ADDR_ADD

esp_ble_mesh_cfg_model_sub_va_delete_t **model_sub_va_delete**

For ESP_BLE_MESH_MODEL_OP_MODEL_SUB_VIRTUAL_ADDR_DELETE

esp_ble_mesh_cfg_model_sub_va_overwrite_t **model_sub_va_overwrite**

For ESP_BLE_MESH_MODEL_OP_MODEL_SUB_VIRTUAL_ADDR_OVERWRITE

esp_ble_mesh_cfg_heartbeat_pub_set_t **heartbeat_pub_set**

For ESP_BLE_MESH_MODEL_OP_HEARTBEAT_PUB_SET

esp_ble_mesh_cfg_heartbeat_sub_set_t **heartbeat_sub_set**

For ESP_BLE_MESH_MODEL_OP_HEARTBEAT_SUB_SET

esp_ble_mesh_cfg_model_pub_va_set_t **model_pub_va_set**

For ESP_BLE_MESH_MODEL_OP_MODEL_PUB_VIRTUAL_ADDR_SET

esp_ble_mesh_cfg_model_sub_delete_all_t **model_sub_delete_all**

For ESP_BLE_MESH_MODEL_OP_MODEL_SUB_DELETE_ALL

esp_ble_mesh_cfg_net_key_update_t **net_key_update**

For ESP_BLE_MESH_MODEL_OP_NET_KEY_UPDATE

esp_ble_mesh_cfg_net_key_delete_t **net_key_delete**

For ESP_BLE_MESH_MODEL_OP_NET_KEY_DELETE

esp_ble_mesh_cfg_app_key_update_t **app_key_update**

For ESP_BLE_MESH_MODEL_OP_APP_KEY_UPDATE

esp_ble_mesh_cfg_app_key_delete_t **app_key_delete**

For ESP_BLE_MESH_MODEL_OP_APP_KEY_DELETE

esp_ble_mesh_cfg_node_identity_set_t **node_identity_set**

For ESP_BLE_MESH_MODEL_OP_NODE_IDENTITY_SET

esp_ble_mesh_cfg_model_app_unbind_t **model_app_unbind**

For ESP_BLE_MESH_MODEL_OP_MODEL_APP_UNBIND

esp_ble_mesh_cfg_kr_phase_set_t **kr_phase_set**

For ESP_BLE_MESH_MODEL_OP_KEY_REFRESH_PHASE_SET

esp_ble_mesh_cfg_net_transmit_set_t **net_transmit_set**

For ESP_BLE_MESH_MODEL_OP_NETWORK_TRANSMIT_SET

union **esp_ble_mesh_cfg_client_common_cb_param_t**

#include <esp_ble_mesh_config_model_api.h> Configuration Client Model received message union.

Public Members

esp_ble_mesh_cfg_beacon_status_cb_t **beacon_status**

The beacon status value

esp_ble_mesh_cfg_comp_data_status_cb_t **comp_data_status**

The composition data status value

esp_ble_mesh_cfg_default_ttl_status_cb_t **default_ttl_status**

The default_ttl status value

esp_ble_mesh_cfg_gatt_proxy_status_cb_t **gatt_proxy_status**

The gatt_proxy status value

esp_ble_mesh_cfg_relay_status_cb_t **relay_status**

The relay status value

esp_ble_mesh_cfg_model_pub_status_cb_t **model_pub_status**

The model publication status value

esp_ble_mesh_cfg_model_sub_status_cb_t **model_sub_status**

The model subscription status value

esp_ble_mesh_cfg_net_key_status_cb_t **netkey_status**

The netkey status value

esp_ble_mesh_cfg_app_key_status_cb_t **appkey_status**

The appkey status value

esp_ble_mesh_cfg_mod_app_status_cb_t **model_app_status**

The model app status value

esp_ble_mesh_cfg_friend_status_cb_t **friend_status**

The friend status value

esp_ble_mesh_cfg_hb_pub_status_cb_t **heartbeat_pub_status**

The heartbeat publication status value

esp_ble_mesh_cfg_hb_sub_status_cb_t **heartbeat_sub_status**

The heartbeat subscription status value

esp_ble_mesh_cfg_net_trans_status_cb_t **net_transmit_status**

The network transmit status value

esp_ble_mesh_cfg_model_sub_list_cb_t **model_sub_list**

The model subscription list value

esp_ble_mesh_cfg_net_key_list_cb_t **netkey_list**

The network key index list value

esp_ble_mesh_cfg_app_key_list_cb_t **appkey_list**

The application key index list value

esp_ble_mesh_cfg_node_id_status_cb_t **node_identity_status**

The node identity status value

esp_ble_mesh_cfg_model_app_list_cb_t **model_app_list**

The model application key index list value

esp_ble_mesh_cfg_kr_phase_status_cb_t **kr_phase_status**

The key refresh phase status value

esp_ble_mesh_cfg_lpn_pollto_status_cb_t **lpn_timeout_status**

The low power node poll timeout status value

union **esp_ble_mesh_cfg_server_state_change_t**

#include <esp_ble_mesh_config_model_api.h> Configuration Server model state change value union.

Public Members

esp_ble_mesh_state_change_cfg_mod_pub_set_t **mod_pub_set**

The recv_op in ctx can be used to decide which state is changed.Config Model Publication Set

esp_ble_mesh_state_change_cfg_model_sub_add_t **mod_sub_add**

Config Model Subscription Add

esp_ble_mesh_state_change_cfg_model_sub_delete_t **mod_sub_delete**

Config Model Subscription Delete

esp_ble_mesh_state_change_cfg_netkey_add_t **netkey_add**

Config NetKey Add

esp_ble_mesh_state_change_cfg_netkey_update_t **netkey_update**

Config NetKey Update

esp_ble_mesh_state_change_cfg_netkey_delete_t **netkey_delete**

Config NetKey Delete

esp_ble_mesh_state_change_cfg_appkey_add_t **appkey_add**

Config AppKey Add

esp_ble_mesh_state_change_cfg_appkey_update_t **appkey_update**

Config AppKey Update

esp_ble_mesh_state_change_cfg_appkey_delete_t **appkey_delete**

Config AppKey Delete

esp_ble_mesh_state_change_cfg_model_app_bind_t **mod_app_bind**

Config Model App Bind

esp_ble_mesh_state_change_cfg_model_app_unbind_t **mod_app_unbind**

Config Model App Unbind

esp_ble_mesh_state_change_cfg_kr_phase_set_t **kr_phase_set**

Config Key Refresh Phase Set

union **esp_ble_mesh_cfg_server_cb_value_t**

#include <esp_ble_mesh_config_model_api.h> Configuration Server model callback value union.

Public Members

esp_ble_mesh_cfg_server_state_change_t **state_change**

ESP_BLE_MESH_CFG_SERVER_STATE_CHANGE_EVT

Structures

struct **esp_ble_mesh_cfg_srv**

Configuration Server Model context

Public Members

esp_ble_mesh_model_t ***model**

Pointer to Configuration Server Model

uint8_t **net_transmit**

Network Transmit state

uint8_t **relay**

Relay Mode state

uint8_t **relay_retransmit**

Relay Retransmit state

uint8_t **beacon**

Secure Network Beacon state

uint8_t **gatt_proxy**

GATT Proxy state

uint8_t **friend_state**

Friend state

uint8_t **default_ttl**

Default TTL

struct k_delayed_work **timer**

Heartbeat Publication timer

uint16_t **dst**

Destination address for Heartbeat messages

uint16_t **count**

Number of Heartbeat messages to be sent

Number of Heartbeat messages received

uint8_t **period**

Period for sending Heartbeat messages

uint8_t **ttl**

TTL to be used when sending Heartbeat messages

uint16_t **feature**

Bit field indicating features that trigger Heartbeat messages when changed

uint16_t **net_idx**

NetKey Index used by Heartbeat Publication

struct *esp_ble_mesh_cfg_srv*::[anonymous] **heartbeat_pub**

Heartbeat Publication

int64_t **expiry**

Timestamp when Heartbeat subscription period is expired

uint16_t **src**

Source address for Heartbeat messages

uint8_t **min_hops**

Minimum hops when receiving Heartbeat messages

uint8_t **max_hops**

Maximum hops when receiving Heartbeat messages

esp_ble_mesh_cb_t **heartbeat_recv_cb**

Optional heartbeat subscription tracking function

struct *esp_ble_mesh_cfg_srv*::[anonymous] **heartbeat_sub**

Heartbeat Subscription

struct **esp_ble_mesh_cfg_composition_data_get_t**

Parameters of Config Composition Data Get.

Public Members

uint8_t **page**

Page number of the Composition Data.

struct **esp_ble_mesh_cfg_model_pub_get_t**

Parameters of Config Model Publication Get.

Public Members

uint16_t **element_addr**

The element address

uint16_t **model_id**

The model id

uint16_t **company_id**

The company id, if not a vendor model, shall set to 0xFFFF

struct **esp_ble_mesh_cfg_sig_model_sub_get_t**

Parameters of Config SIG Model Subscription Get.

Public Members

uint16_t **element_addr**

The element address

uint16_t **model_id**

The model id

struct **esp_ble_mesh_cfg_vnd_model_sub_get_t**

Parameters of Config Vendor Model Subscription Get.

Public Members

uint16_t **element_addr**

The element address

uint16_t **model_id**

The model id

uint16_t **company_id**

The company id, if not a vendor model, shall set to 0xFFFF

struct **esp_ble_mesh_cfg_app_key_get_t**

Parameters of Config AppKey Get.

Public Members

uint16_t **net_idx**

The network key index

struct **esp_ble_mesh_cfg_node_identity_get_t**

Parameters of Config Node Identity Get.

Public Members

uint16_t **net_idx**

The network key index

struct **esp_ble_mesh_cfg_sig_model_app_get_t**

Parameters of Config SIG Model App Get.

Public Members

uint16_t **element_addr**

The element address

uint16_t **model_id**

The model id

struct **esp_ble_mesh_cfg_vnd_model_app_get_t**

Parameters of Config Vendor Model App Get.

Public Members

uint16_t **element_addr**

The element address

uint16_t **model_id**

The model id

uint16_t **company_id**

The company id, if not a vendor model, shall set to 0xFFFF

struct **esp_ble_mesh_cfg_kr_phase_get_t**

Parameters of Config Key Refresh Phase Get.

Public Members

uint16_t **net_idx**

The network key index

struct **esp_ble_mesh_cfg_lpn_polltimeout_get_t**

Parameters of Config Low Power Node PollTimeout Get.

Public Members

uint16_t **lpn_addr**

The unicast address of the Low Power node

struct **esp_ble_mesh_cfg_beacon_set_t**

Parameters of Config Beacon Set.

Public Members

uint8_t **beacon**

New Secure Network Beacon state

struct **esp_ble_mesh_cfg_default_ttl_set_t**

Parameters of Config Default TTL Set.

Public Members

uint8_t **ttl**

The default TTL state value

struct **esp_ble_mesh_cfg_friend_set_t**

Parameters of Config Friend Set.

Public Members

uint8_t **friend_state**

The friend state value

struct **esp_ble_mesh_cfg_gatt_proxy_set_t**

Parameters of Config GATT Proxy Set.

Public Members

uint8_t **gatt_proxy**

The GATT Proxy state value

struct **esp_ble_mesh_cfg_relay_set_t**

Parameters of Config Relay Set.

Public Members

uint8_t **relay**

The relay value

uint8_t **relay_retransmit**

The relay retransmit value

struct **esp_ble_mesh_cfg_net_key_add_t**

Parameters of Config NetKey Add.

Public Members

uint16_t **net_idx**

The network key index

uint8_t **net_key**[16]

The network key value

struct **esp_ble_mesh_cfg_app_key_add_t**

Parameters of Config AppKey Add.

Public Members

uint16_t **net_idx**

The network key index

uint16_t **app_idx**

The app key index

uint8_t **app_key**[16]

The app key value

struct **esp_ble_mesh_cfg_model_app_bind_t**

Parameters of Config Model App Bind.

Public Members

uint16_t **element_addr**

The element address

uint16_t **model_app_idx**

Index of the app key to bind with the model

uint16_t **model_id**

The model id

uint16_t **company_id**

The company id, if not a vendor model, shall set to 0xFFFF

struct **esp_ble_mesh_cfg_model_pub_set_t**

Parameters of Config Model Publication Set.

Public Members

uint16_t **element_addr**

The element address

uint16_t **publish_addr**

Value of the publish address

uint16_t **publish_app_idx**

Index of the application key

bool **cred_flag**

Value of the Friendship Credential Flag

uint8_t **publish_ttl**

Default TTL value for the publishing messages

uint8_t **publish_period**

Period for periodic status publishing

uint8_t **publish_retransmit**

Number of retransmissions and number of 50-millisecond steps between retransmissions

uint16_t **model_id**

The model id

uint16_t **company_id**

The company id, if not a vendor model, shall set to 0xFFFF

struct **esp_ble_mesh_cfg_model_sub_add_t**

Parameters of Config Model Subscription Add.

Public Members

uint16_t **element_addr**

The element address

uint16_t **sub_addr**

The address to be added to the Subscription List

uint16_t **model_id**

The model id

uint16_t **company_id**

The company id, if not a vendor model, shall set to 0xFFFF

struct **esp_ble_mesh_cfg_model_sub_delete_t**

Parameters of Config Model Subscription Delete.

Public Members

uint16_t **element_addr**

The element address

uint16_t **sub_addr**

The address to be removed from the Subscription List

uint16_t **model_id**

The model id

uint16_t **company_id**

The company id, if not a vendor model, shall set to 0xFFFF

struct **esp_ble_mesh_cfg_model_sub_overwrite_t**

Parameters of Config Model Subscription Overwrite.

Public Members

uint16_t **element_addr**

The element address

uint16_t **sub_addr**

The address to be added to the Subscription List

uint16_t **model_id**

The model id

uint16_t **company_id**

The company id, if not a vendor model, shall set to 0xFFFF

struct **esp_ble_mesh_cfg_model_sub_va_add_t**

Parameters of Config Model Subscription Virtual Address Add.

Public Members

uint16_t **element_addr**

The element address

uint8_t **label_uuid**[16]

The Label UUID of the virtual address to be added to the Subscription List

uint16_t **model_id**

The model id

uint16_t **company_id**

The company id, if not a vendor model, shall set to 0xFFFF

struct **esp_ble_mesh_cfg_model_sub_va_delete_t**

Parameters of Config Model Subscription Virtual Address Delete.

Public Members

uint16_t **element_addr**

The element address

uint8_t **label_uuid**[16]

The Label UUID of the virtual address to be removed from the Subscription List

uint16_t **model_id**

The model id

uint16_t **company_id**

The company id, if not a vendor model, shall set to 0xFFFF

struct **esp_ble_mesh_cfg_model_sub_va_overwrite_t**

Parameters of Config Model Subscription Virtual Address Overwrite.

Public Members

uint16_t **element_addr**

The element address

uint8_t **label_uuid**[16]

The Label UUID of the virtual address to be added to the Subscription List

uint16_t **model_id**

The model id

uint16_t **company_id**

The company id, if not a vendor model, shall set to 0xFFFF

struct **esp_ble_mesh_cfg_model_pub_va_set_t**

Parameters of Config Model Publication Virtual Address Set.

Public Members

uint16_t **element_addr**

The element address

uint8_t **label_uuid**[16]

Value of the Label UUID publish address

uint16_t **publish_app_idx**

Index of the application key

bool **cred_flag**

Value of the Friendship Credential Flag

uint8_t **publish_ttl**

Default TTL value for the publishing messages

uint8_t **publish_period**

Period for periodic status publishing

uint8_t **publish_retransmit**

Number of retransmissions and number of 50-millisecond steps between retransmissions

uint16_t **model_id**

The model id

uint16_t **company_id**

The company id, if not a vendor model, shall set to 0xFFFF

struct **esp_ble_mesh_cfg_model_sub_delete_all_t**

Parameters of Config Model Subscription Delete All.

Public Members

uint16_t **element_addr**

The element address

uint16_t **model_id**

The model id

uint16_t **company_id**

The company id, if not a vendor model, shall set to 0xFFFF

struct **esp_ble_mesh_cfg_net_key_update_t**

Parameters of Config NetKey Update.

Public Members

uint16_t **net_idx**

The network key index

uint8_t **net_key**[16]

The network key value

struct **esp_ble_mesh_cfg_net_key_delete_t**

Parameters of Config NetKey Delete.

Public Members

uint16_t **net_idx**

The network key index

struct **esp_ble_mesh_cfg_app_key_update_t**

Parameters of Config AppKey Update.

Public Members

uint16_t **net_idx**

The network key index

uint16_t **app_idx**

The app key index

uint8_t **app_key**[16]

The app key value

struct **esp_ble_mesh_cfg_app_key_delete_t**

Parameters of Config AppKey Delete.

Public Members

uint16_t **net_idx**

The network key index

uint16_t **app_idx**

The app key index

struct **esp_ble_mesh_cfg_node_identity_set_t**

Parameters of Config Node Identity Set.

Public Members

uint16_t **net_idx**

The network key index

uint8_t **identity**

New Node Identity state

struct **esp_ble_mesh_cfg_model_app_unbind_t**

Parameters of Config Model App Unbind.

Public Members

uint16_t **element_addr**

The element address

uint16_t **model_app_idx**

Index of the app key to bind with the model

uint16_t **model_id**

The model id

uint16_t **company_id**

The company id, if not a vendor model, shall set to 0xFFFF

struct **esp_ble_mesh_cfg_kr_phase_set_t**

Parameters of Config Key Refresh Phase Set.

Public Members

uint16_t **net_idx**

The network key index

uint8_t **transition**

New Key Refresh Phase Transition

struct **esp_ble_mesh_cfg_net_transmit_set_t**

Parameters of Config Network Transmit Set.

Public Members

uint8_t **net_transmit**

Network Transmit State

struct **esp_ble_mesh_cfg_heartbeat_pub_set_t**

Parameters of Config Model Heartbeat Publication Set.

Public Members

uint16_t **dst**

Destination address for Heartbeat messages

uint8_t **count**

Number of Heartbeat messages to be sent

uint8_t **period**

Period for sending Heartbeat messages

uint8_t **ttl**

TTL to be used when sending Heartbeat messages

uint16_t **feature**

Bit field indicating features that trigger Heartbeat messages when changed

uint16_t **net_idx**

NetKey Index

struct **esp_ble_mesh_cfg_heartbeat_sub_set_t**

Parameters of Config Model Heartbeat Subscription Set.

Public Members

uint16_t **src**

Source address for Heartbeat messages

uint16_t **dst**

Destination address for Heartbeat messages

uint8_t **period**

Period for receiving Heartbeat messages

struct **esp_ble_mesh_cfg_beacon_status_cb_t**

Parameter of Config Beacon Status

Public Members

uint8_t **beacon**

Secure Network Beacon state value

struct **esp_ble_mesh_cfg_comp_data_status_cb_t**

Parameters of Config Composition Data Status

Public Members

uint8_t **page**

Page number of the Composition Data

struct net_buf_simple ***composition_data**

Pointer to Composition Data for the identified page

struct **esp_ble_mesh_cfg_default_ttl_status_cb_t**

Parameter of Config Default TTL Status

Public Members

uint8_t **default_ttl**

Default TTL state value

struct **esp_ble_mesh_cfg_gatt_proxy_status_cb_t**

Parameter of Config GATT Proxy Status

Public Members

uint8_t **gatt_proxy**

GATT Proxy state value

struct **esp_ble_mesh_cfg_relay_status_cb_t**

Parameters of Config Relay Status

Public Members

uint8_t **relay**

Relay state value

uint8_t **retransmit**

Relay retransmit value(number of retransmissions and number of 10-millisecond steps between retransmissions)

struct **esp_ble_mesh_cfg_model_pub_status_cb_t**

Parameters of Config Model Publication Status

Public Members

uint8_t **status**

Status Code for the request message

uint16_t **element_addr**

Address of the element

uint16_t **publish_addr**

Value of the publish address

uint16_t **app_idx**

Index of the application key

bool **cred_flag**

Value of the Friendship Credential Flag

uint8_t **ttl**

Default TTL value for the outgoing messages

uint8_t **period**

Period for periodic status publishing

uint8_t **transmit**

Number of retransmissions and number of 50-millisecond steps between retransmissions

uint16_t **company_id**

Company ID

uint16_t **model_id**

Model ID

struct **esp_ble_mesh_cfg_model_sub_status_cb_t**

Parameters of Config Model Subscription Status

Public Members

uint8_t **status**

Status Code for the request message

uint16_t **element_addr**

Address of the element

uint16_t **sub_addr**

Value of the address

uint16_t **company_id**

Company ID

uint16_t **model_id**

Model ID

struct **esp_ble_mesh_cfg_net_key_status_cb_t**

Parameters of Config NetKey Status

Public Members

uint8_t **status**

Status Code for the request message

uint16_t **net_idx**

Index of the NetKey

struct **esp_ble_mesh_cfg_app_key_status_cb_t**

Parameters of Config AppKey Status

Public Members

uint8_t **status**

Status Code for the request message

uint16_t **net_idx**

Index of the NetKey

uint16_t **app_idx**

Index of the application key

struct **esp_ble_mesh_cfg_mod_app_status_cb_t**

Parameters of Config Model App Status

Public Members

uint8_t **status**

Status Code for the request message

uint16_t **element_addr**

Address of the element

uint16_t **app_idx**

Index of the application key

uint16_t **company_id**

Company ID

uint16_t **model_id**

Model ID

struct **esp_ble_mesh_cfg_friend_status_cb_t**

Parameter of Config Friend Status

Public Members

uint8_t **friend_state**

Friend state value

struct **esp_ble_mesh_cfg_hb_pub_status_cb_t**

Parameters of Config Heartbeat Publication Status

Public Members

uint8_t **status**

Status Code for the request message

uint16_t **dst**

Destination address for Heartbeat messages

uint8_t **count**

Number of Heartbeat messages remaining to be sent

uint8_t **period**

Period for sending Heartbeat messages

uint8_t **ttl**

TTL to be used when sending Heartbeat messages

uint16_t **features**

Features that trigger Heartbeat messages when changed

uint16_t **net_idx**

Index of the NetKey

struct **esp_ble_mesh_cfg_hb_sub_status_cb_t**

Parameters of Config Heartbeat Subscription Status

Public Members

uint8_t **status**

Status Code for the request message

uint16_t **src**

Source address for Heartbeat messages

uint16_t **dst**

Destination address for Heartbeat messages

uint8_t **period**

Remaining Period for processing Heartbeat messages

uint8_t **count**

Number of Heartbeat messages received

uint8_t **min_hops**

Minimum hops when receiving Heartbeat messages

uint8_t **max_hops**

Maximum hops when receiving Heartbeat messages

struct **esp_ble_mesh_cfg_net_trans_status_cb_t**

Parameters of Config Network Transmit Status

Public Members

uint8_t **net_trans_count**

Number of transmissions for each Network PDU originating from the node

uint8_t **net_trans_step**

Maximum hops when receiving Heartbeat messages

struct **esp_ble_mesh_cfg_model_sub_list_cb_t**

Parameters of Config SIG/Vendor Subscription List

Public Members

uint8_t **status**

Status Code for the request message

uint16_t **element_addr**

Address of the element

uint16_t **company_id**

Company ID

uint16_t **model_id**

Model ID

struct net_buf_simple ***sub_addr**

A block of all addresses from the Subscription List

struct **esp_ble_mesh_cfg_net_key_list_cb_t**

Parameter of Config NetKey List

Public Members

struct net_buf_simple ***net_idx**

A list of NetKey Indexes known to the node

struct **esp_ble_mesh_cfg_app_key_list_cb_t**

Parameters of Config AppKey List

Public Members

uint8_t **status**

Status Code for the request message

uint16_t **net_idx**

NetKey Index of the NetKey that the AppKeys are bound to

struct net_buf_simple ***app_idx**

A list of AppKey indexes that are bound to the NetKey identified by NetKeyIndex

struct **esp_ble_mesh_cfg_node_id_status_cb_t**

Parameters of Config Node Identity Status

Public Members

uint8_t **status**

Status Code for the request message

uint16_t **net_idx**

Index of the NetKey

uint8_t **identity**

Node Identity state

struct **esp_ble_mesh_cfg_model_app_list_cb_t**

Parameters of Config SIG/Vendor Model App List

Public Members

uint8_t **status**

Status Code for the request message

uint16_t **element_addr**

Address of the element

uint16_t **company_id**

Company ID

uint16_t **model_id**

Model ID

struct net_buf_simple ***app_idx**

All AppKey indexes bound to the Model

struct **esp_ble_mesh_cfg_kr_phase_status_cb_t**

Parameters of Config Key Refresh Phase Status

Public Members

uint8_t **status**

Status Code for the request message

uint16_t **net_idx**

Index of the NetKey

uint8_t **phase**

Key Refresh Phase state

struct **esp_ble_mesh_cfg_lpn_pollto_status_cb_t**

Parameters of Config Low Power Node PollTimeout Status

Public Members

uint16_t **lpn_addr**

The unicast address of the Low Power node

int32_t **poll_timeout**

The current value of the PollTimeout timer of the Low Power node

struct **esp_ble_mesh_cfg_client_cb_param_t**

Configuration Client Model callback parameters

Public Members

int **error_code**

Appropriate error code

esp_ble_mesh_client_common_param_t ***params**

The client common parameters

esp_ble_mesh_cfg_client_common_cb_param_t **status_cb**

The config status message callback values

struct **esp_ble_mesh_state_change_cfg_mod_pub_set_t**

Configuration Server model related context.

Public Members

uint16_t **element_addr**

Element Address

uint16_t **pub_addr**

Publish Address

uint16_t **app_idx**

AppKey Index

bool **cred_flag**

Friendship Credential Flag

uint8_t **pub_ttl**

Publish TTL

uint8_t **pub_period**

Publish Period

uint8_t **pub_retransmit**

Publish Retransmit

uint16_t **company_id**

Company ID

uint16_t **model_id**

Model ID

struct **esp_ble_mesh_state_change_cfg_model_sub_add_t**

Parameters of Config Model Subscription Add

Public Members

uint16_t **element_addr**

Element Address

uint16_t **sub_addr**

Subscription Address

uint16_t **company_id**

Company ID

uint16_t **model_id**

Model ID

struct **esp_ble_mesh_state_change_cfg_model_sub_delete_t**

Parameters of Config Model Subscription Delete

Public Members

uint16_t **element_addr**

Element Address

uint16_t **sub_addr**

Subscription Address

uint16_t **company_id**
Company ID

uint16_t **model_id**
Model ID

struct **esp_ble_mesh_state_change_cfg_netkey_add_t**
Parameters of Config NetKey Add

Public Members

uint16_t **net_idx**
NetKey Index

uint8_t **net_key**[16]
NetKey

struct **esp_ble_mesh_state_change_cfg_netkey_update_t**
Parameters of Config NetKey Update

Public Members

uint16_t **net_idx**
NetKey Index

uint8_t **net_key**[16]
NetKey

struct **esp_ble_mesh_state_change_cfg_netkey_delete_t**
Parameter of Config NetKey Delete

Public Members

uint16_t **net_idx**
NetKey Index

struct **esp_ble_mesh_state_change_cfg_appkey_add_t**
Parameters of Config AppKey Add

Public Members

uint16_t **net_idx**
NetKey Index

uint16_t **app_idx**
AppKey Index

uint8_t **app_key**[16]
AppKey

struct **esp_ble_mesh_state_change_cfg_appkey_update_t**
Parameters of Config AppKey Update

Public Members

uint16_t **net_idx**
NetKey Index

uint16_t **app_idx**
AppKey Index

uint8_t **app_key**[16]
AppKey

struct **esp_ble_mesh_state_change_cfg_appkey_delete_t**
Parameters of Config AppKey Delete

Public Members

uint16_t **net_idx**
NetKey Index

uint16_t **app_idx**
AppKey Index

struct **esp_ble_mesh_state_change_cfg_model_app_bind_t**
Parameters of Config Model App Bind

Public Members

uint16_t **element_addr**
Element Address

uint16_t **app_idx**
AppKey Index

uint16_t **company_id**
Company ID

uint16_t **model_id**
Model ID

struct **esp_ble_mesh_state_change_cfg_model_app_unbind_t**
Parameters of Config Model App Unbind

Public Members

uint16_t **element_addr**

Element Address

uint16_t **app_idx**

AppKey Index

uint16_t **company_id**

Company ID

uint16_t **model_id**

Model ID

struct **esp_ble_mesh_state_change_cfg_kr_phase_set_t**

Parameters of Config Key Refresh Phase Set

Public Members

uint16_t **net_idx**

NetKey Index

uint8_t **kr_phase**

New Key Refresh Phase Transition

struct **esp_ble_mesh_cfg_server_cb_param_t**

Configuration Server model callback parameters

Public Members

esp_ble_mesh_model_t ***model**

Pointer to the server model structure

esp_ble_mesh_msg_ctx_t **ctx**

Context of the received message

esp_ble_mesh_cfg_server_cb_value_t **value**

Value of the received configuration messages

Macros

ESP_BLE_MESH_MODEL_CFG_SRV(srv_data)

Define a new Config Server Model.

Note: The Config Server Model can only be included by a Primary Element.

Parameters

- **srv_data** –Pointer to a unique Config Server Model user_data.

Returns New Config Server Model instance.

ESP_BLE_MESH_MODEL_CFG_CLI(cli_data)

Define a new Config Client Model.

Note: The Config Client Model can only be included by a Primary Element.

Parameters

- **cli_data** –Pointer to a unique struct *esp_ble_mesh_client_t*.

Returns New Config Client Model instance.

Type Definitions

typedef struct *esp_ble_mesh_cfg_srv* **esp_ble_mesh_cfg_srv_t**

Configuration Server Model context

typedef void (***esp_ble_mesh_cfg_client_cb_t**)(*esp_ble_mesh_cfg_client_cb_event_t* event, *esp_ble_mesh_cfg_client_cb_param_t* *param)

Bluetooth Mesh Config Client and Server Model functions.

Configuration Client Model callback function type

Param event Event type
Param param Pointer to callback parameter

typedef void (***esp_ble_mesh_cfg_server_cb_t**)(*esp_ble_mesh_cfg_server_cb_event_t* event, *esp_ble_mesh_cfg_server_cb_param_t* *param)

Configuration Server Model callback function type.

Param event Event type
Param param Pointer to callback parameter

Enumerations

enum **esp_ble_mesh_cfg_client_cb_event_t**

This enum value is the event of Configuration Client Model

Values:

enumerator **ESP_BLE_MESH_CFG_CLIENT_GET_STATE_EVT**

enumerator **ESP_BLE_MESH_CFG_CLIENT_SET_STATE_EVT**

enumerator **ESP_BLE_MESH_CFG_CLIENT_PUBLISH_EVT**

enumerator **ESP_BLE_MESH_CFG_CLIENT_TIMEOUT_EVT**

enumerator **ESP_BLE_MESH_CFG_CLIENT_EVT_MAX**

enum **esp_ble_mesh_cfg_server_cb_event_t**

This enum value is the event of Configuration Server model

Values:

enumerator **ESP_BLE_MESH_CFG_SERVER_STATE_CHANGE_EVT**

enumerator **ESP_BLE_MESH_CFG_SERVER_EVT_MAX**

Health Client/Server Models

Header File

- components/bt/esp_ble_mesh/api/models/include/esp_ble_mesh_health_model_api.h

Functions

esp_err_t **esp_ble_mesh_register_health_client_callback**(*esp_ble_mesh_health_client_cb_t* callback)

Register BLE Mesh Health Model callback, the callback will report Health Client & Server Model events.

Parameters **callback** –**[in]** Pointer to the callback function.
Returns ESP_OK on success or error code otherwise.

esp_err_t **esp_ble_mesh_register_health_server_callback**(*esp_ble_mesh_health_server_cb_t* callback)

Register BLE Mesh Health Server Model callback.

Parameters **callback** –**[in]** Pointer to the callback function.
Returns ESP_OK on success or error code otherwise.

esp_err_t **esp_ble_mesh_health_client_get_state**(*esp_ble_mesh_client_common_param_t* *params, *esp_ble_mesh_health_client_get_state_t* *get_state)

This function is called to get the Health Server states using the Health Client Model get messages.

Note: If you want to find the opcodes and corresponding meanings accepted by this API, please refer to esp_ble_mesh_opcode_health_client_get_t in esp_ble_mesh_defs.h

---

Parameters

- **params** –**[in]** Pointer to BLE Mesh common client parameters.
- **get_state** –**[in]** Pointer to a union, each kind of opcode corresponds to one structure inside. Shall not be set to NULL.

Returns ESP_OK on success or error code otherwise.

esp_err_t **esp_ble_mesh_health_client_set_state**(*esp_ble_mesh_client_common_param_t* *params, *esp_ble_mesh_health_client_set_state_t* *set_state)

This function is called to set the Health Server states using the Health Client Model set messages.

Note: If you want to find the opcodes and corresponding meanings accepted by this API, please refer to esp_ble_mesh_opcode_health_client_set_t in esp_ble_mesh_defs.h

---

Parameters

- **params** –**[in]** Pointer to BLE Mesh common client parameters.
- **set_state** –**[in]** Pointer to a union, each kind of opcode corresponds to one structure inside. Shall not be set to NULL.

Returns ESP_OK on success or error code otherwise.

esp_err_t **esp_ble_mesh_health_server_fault_update** (*esp_ble_mesh_elem_t* *element)

This function is called by the Health Server Model to update the context of its Health Current status.

Parameters **element** –**[in]** The element to which the Health Server Model belongs.
Returns ESP_OK on success or error code otherwise.

Unions

union **esp_ble_mesh_health_client_get_state_t**

#include <esp_ble_mesh_health_model_api.h> For ESP_BLE_MESH_MODEL_OP_HEALTH_FAULT_GET ESP_BLE_MESH_MODEL_OP_ATTENTION_GET ESP_BLE_MESH_MODEL_OP_HEALTH_PERIOD_GET the get_state parameter in the esp_ble_mesh_health_client_get_state function should not be set to NULL.

Public Members

esp_ble_mesh_health_fault_get_t **fault_get**

For ESP_BLE_MESH_MODEL_OP_HEALTH_FAULT_GET.

union **esp_ble_mesh_health_client_set_state_t**

#include <esp_ble_mesh_health_model_api.h> For ESP_BLE_MESH_MODEL_OP_HEALTH_FAULT_CLEAR ESP_BLE_MESH_MODEL_OP_HEALTH_FAULT_CLEAR_UNACK ESP_BLE_MESH_MODEL_OP_HEALTH_FAULT ESP_BLE_MESH_MODEL_OP_HEALTH_FAULT_TEST_UNACK ESP_BLE_MESH_MODEL_OP_HEALTH_PERIOD ESP_BLE_MESH_MODEL_OP_HEALTH_PERIOD_SET_UNACK ESP_BLE_MESH_MODEL_OP_ATTENTION_SET ESP_BLE_MESH_MODEL_OP_ATTENTION_SET_UNACK the set_state parameter in the esp_ble_mesh_health_client_set_state function should not be set to NULL.

Public Members

esp_ble_mesh_health_attention_set_t **attention_set**

For ESP_BLE_MESH_MODEL_OP_ATTENTION_SET or ESP_BLE_MESH_MODEL_OP_ATTENTION_SET_UNA

esp_ble_mesh_health_period_set_t **period_set**

For ESP_BLE_MESH_MODEL_OP_HEALTH_PERIOD_SET or ESP_BLE_MESH_MODEL_OP_HEALTH_PERIOD_SET_UNACK.

esp_ble_mesh_health_fault_test_t **fault_test**

For ESP_BLE_MESH_MODEL_OP_HEALTH_FAULT_TEST or ESP_BLE_MESH_MODEL_OP_HEALTH_FAULT_TEST_UNACK.

esp_ble_mesh_health_fault_clear_t **fault_clear**

For ESP_BLE_MESH_MODEL_OP_HEALTH_FAULT_CLEAR or ESP_BLE_MESH_MODEL_OP_HEALTH_FAULT_CLEAR_UNACK.

union **esp_ble_mesh_health_client_common_cb_param_t**

#include <esp_ble_mesh_health_model_api.h> Health Client Model received message union.

Public Members

esp_ble_mesh_health_current_status_cb_t **current_status**

The health current status value

esp_ble_mesh_health_fault_status_cb_t **fault_status**

The health fault status value

esp_ble_mesh_health_period_status_cb_t **period_status**

The health period status value

esp_ble_mesh_health_attention_status_cb_t **attention_status**

The health attention status value

union **esp_ble_mesh_health_server_cb_param_t**

#include <esp_ble_mesh_health_model_api.h> Health Server Model callback parameters union.

Public Members

esp_ble_mesh_health_fault_update_comp_cb_t **fault_update_comp**

ESP_BLE_MESH_HEALTH_SERVER_FAULT_UPDATE_COMP_EVT

esp_ble_mesh_health_fault_clear_cb_t **fault_clear**

ESP_BLE_MESH_HEALTH_SERVER_FAULT_CLEAR_EVT

esp_ble_mesh_health_fault_test_cb_t **fault_test**

ESP_BLE_MESH_HEALTH_SERVER_FAULT_TEST_EVT

esp_ble_mesh_health_attention_on_cb_t **attention_on**

ESP_BLE_MESH_HEALTH_SERVER_ATTENTION_ON_EVT

esp_ble_mesh_health_attention_off_cb_t **attention_off**

ESP_BLE_MESH_HEALTH_SERVER_ATTENTION_OFF_EVT

Structures

struct **esp_ble_mesh_health_srv_cb_t**

ESP BLE Mesh Health Server callback

Public Members

esp_ble_mesh_cb_t **fault_clear**

Clear health registered faults. Initialized by the stack.

esp_ble_mesh_cb_t **fault_test**

Run a specific health test. Initialized by the stack.

esp_ble_mesh_cb_t **attention_on**

Health attention on callback. Initialized by the stack.

esp_ble_mesh_cb_t **attention_off**

Health attention off callback. Initialized by the stack.

struct **esp_ble_mesh_health_test_t**

ESP BLE Mesh Health Server test Context

Public Members

uint8_t **id_count**

Number of Health self-test ID

const uint8_t ***test_ids**

Array of Health self-test IDs

uint16_t **company_id**

Company ID used to identify the Health Fault state

uint8_t **prev_test_id**

Current test ID of the health fault test

uint8_t **current_faults**[32]

Array of current faults

uint8_t **registered_faults**[32]

Array of registered faults

struct **esp_ble_mesh_health_srv_t**

ESP BLE Mesh Health Server Model Context

Public Members

esp_ble_mesh_model_t ***model**

Pointer to Health Server Model

esp_ble_mesh_health_srv_cb_t **health_cb**

Health callback struct

struct k_delayed_work **attention_timer**

Attention Timer state

bool **attention_timer_start**

Attention Timer start flag

esp_ble_mesh_health_test_t **health_test**

Health Server fault test

struct **esp_ble_mesh_health_fault_get_t**

Parameter of Health Fault Get

Public Members

uint16_t **company_id**

Bluetooth assigned 16-bit Company ID

struct **esp_ble_mesh_health_attention_set_t**

Parameter of Health Attention Set

Public Members

uint8_t **attention**

Value of the Attention Timer state

struct **esp_ble_mesh_health_period_set_t**

Parameter of Health Period Set

Public Members

uint8_t **fast_period_divisor**

Divider for the Publish Period

struct **esp_ble_mesh_health_fault_test_t**

Parameter of Health Fault Test

Public Members

uint16_t **company_id**

Bluetooth assigned 16-bit Company ID

uint8_t **test_id**

ID of a specific test to be performed

struct **esp_ble_mesh_health_fault_clear_t**

Parameter of Health Fault Clear

Public Members

uint16_t **company_id**

Bluetooth assigned 16-bit Company ID

struct **esp_ble_mesh_health_current_status_cb_t**

Parameters of Health Current Status

Public Members

uint8_t **test_id**

ID of a most recently performed test

uint16_t **company_id**

Bluetooth assigned 16-bit Company ID

struct net_buf_simple ***fault_array**

FaultArray field contains a sequence of 1-octet fault values

struct **esp_ble_mesh_health_fault_status_cb_t**

Parameters of Health Fault Status

Public Members

uint8_t **test_id**

ID of a most recently performed test

uint16_t **company_id**

Bluetooth assigned 16-bit Company ID

struct net_buf_simple ***fault_array**

FaultArray field contains a sequence of 1-octet fault values

struct **esp_ble_mesh_health_period_status_cb_t**

Parameter of Health Period Status

Public Members

uint8_t **fast_period_divisor**

Divider for the Publish Period

struct **esp_ble_mesh_health_attention_status_cb_t**

Parameter of Health Attention Status

Public Members

uint8_t **attention**

Value of the Attention Timer state

struct **esp_ble_mesh_health_client_cb_param_t**

Health Client Model callback parameters

Public Members

int **error_code**

Appropriate error code

esp_ble_mesh_client_common_param_t ***params**

The client common parameters.

esp_ble_mesh_health_client_common_cb_param_t **status_cb**

The health message status callback values

struct **esp_ble_mesh_health_fault_update_comp_cb_t**

Parameter of publishing Health Current Status completion event

Public Members

int **error_code**

The result of publishing Health Current Status

esp_ble_mesh_elem_t ***element**

Pointer to the element which contains the Health Server Model

struct **esp_ble_mesh_health_fault_clear_cb_t**

Parameters of Health Fault Clear event

Public Members

esp_ble_mesh_model_t ***model**

Pointer to the Health Server Model

uint16_t **company_id**

Bluetooth assigned 16-bit Company ID

struct **esp_ble_mesh_health_fault_test_cb_t**

Parameters of Health Fault Test event

Public Members

esp_ble_mesh_model_t ***model**

Pointer to the Health Server Model

uint8_t **test_id**

ID of a specific test to be performed

uint16_t **company_id**

Bluetooth assigned 16-bit Company ID

struct **esp_ble_mesh_health_attention_on_cb_t**

Parameter of Health Attention On event

Public Members

esp_ble_mesh_model_t ***model**

Pointer to the Health Server Model

uint8_t **time**

Duration of attention timer on (in seconds)

struct **esp_ble_mesh_health_attention_off_cb_t**

Parameter of Health Attention Off event

Public Members

esp_ble_mesh_model_t ***model**

Pointer to the Health Server Model

Macros

ESP_BLE_MESH_MODEL_HEALTH_SRV(srv, pub)

Define a new Health Server Model.

Note: The Health Server Model can only be included by a Primary Element.

Parameters

- **srv** –Pointer to the unique struct *esp_ble_mesh_health_srv_t*.
- **pub** –Pointer to the unique struct *esp_ble_mesh_model_pub_t*.

Returns New Health Server Model instance.

ESP_BLE_MESH_MODEL_HEALTH_CLI(cli_data)

Define a new Health Client Model.

Note: This API needs to be called for each element on which the application needs to have a Health Client Model.

Parameters

- **cli_data** –Pointer to the unique struct *esp_ble_mesh_client_t*.

Returns New Health Client Model instance.

ESP_BLE_MESH_HEALTH_PUB_DEFINE(_name, _max, _role)

A helper to define a health publication context

Parameters

- **_name** –Name given to the publication context variable.
- **_max** –Maximum number of faults the element can have.
- **_role** –Role of the device which contains the model.

ESP_BLE_MESH_HEALTH_STANDARD_TEST

SIG identifier of Health Fault Test. 0x01 ~ 0xFF: Vendor Specific Test.

ESP_BLE_MESH_NO_FAULT

Fault values of Health Fault Test. 0x33 ~ 0x7F: Reserved for Future Use. 0x80 ~ 0xFF: Vendor Specific Warning/Error.

ESP_BLE_MESH_BATTERY_LOW_WARNING

ESP_BLE_MESH_BATTERY_LOW_ERROR

ESP_BLE_MESH_SUPPLY_VOLTAGE_TOO_LOW_WARNING

ESP_BLE_MESH_SUPPLY_VOLTAGE_TOO_LOW_ERROR

ESP_BLE_MESH_SUPPLY_VOLTAGE_TOO_HIGH_WARNING

ESP_BLE_MESH_SUPPLY_VOLTAGE_TOO_HIGH_ERROR

ESP_BLE_MESH_POWER_SUPPLY_INTERRUPTED_WARNING

ESP_BLE_MESH_POWER_SUPPLY_INTERRUPTED_ERROR

ESP_BLE_MESH_NO_LOAD_WARNING

ESP_BLE_MESH_NO_LOAD_ERROR

ESP_BLE_MESH_OVERLOAD_WARNING

ESP_BLE_MESH_OVERLOAD_ERROR

ESP_BLE_MESH_OVERHEAT_WARNING

ESP_BLE_MESH_OVERHEAT_ERROR

ESP_BLE_MESH_CONDENSATION_WARNING

ESP_BLE_MESH_CONDENSATION_ERROR

ESP_BLE_MESH_VIBRATION_WARNING

ESP_BLE_MESH_VIBRATION_ERROR

ESP_BLE_MESH_CONFIGURATION_WARNING

ESP_BLE_MESH_CONFIGURATION_ERROR

ESP_BLE_MESH_ELEMENT_NOT_CALIBRATED_WARNING

ESP_BLE_MESH_ELEMENT_NOT_CALIBRATED_ERROR

ESP_BLE_MESH_MEMORY_WARNING

ESP_BLE_MESH_MEMORY_ERROR

ESP_BLE_MESH_SELF_TEST_WARNING

ESP_BLE_MESH_SELF_TEST_ERROR

ESP_BLE_MESH_INPUT_TOO_LOW_WARNING

ESP_BLE_MESH_INPUT_TOO_LOW_ERROR

ESP_BLE_MESH_INPUT_TOO_HIGH_WARNING

ESP_BLE_MESH_INPUT_TOO_HIGH_ERROR

ESP_BLE_MESH_INPUT_NO_CHANGE_WARNING

ESP_BLE_MESH_INPUT_NO_CHANGE_ERROR

ESP_BLE_MESH_ACTUATOR_BLOCKED_WARNING

ESP_BLE_MESH_ACTUATOR_BLOCKED_ERROR

ESP_BLE_MESH_HOUSING_OPENED_WARNING

ESP_BLE_MESH_HOUSING_OPENED_ERROR

ESP_BLE_MESH_TAMPER_WARNING

ESP_BLE_MESH_TAMPER_ERROR

ESP_BLE_MESH_DEVICE_MOVED_WARNING

ESP_BLE_MESH_DEVICE_MOVED_ERROR

ESP_BLE_MESH_DEVICE_DROPPED_WARNING

ESP_BLE_MESH_DEVICE_DROPPED_ERROR

ESP_BLE_MESH_OVERFLOW_WARNING

ESP_BLE_MESH_OVERFLOW_ERROR

ESP_BLE_MESH_EMPTY_WARNING

ESP_BLE_MESH_EMPTY_ERROR

ESP_BLE_MESH_INTERNAL_BUS_WARNING

ESP_BLE_MESH_INTERNAL_BUS_ERROR

ESP_BLE_MESH_MECHANISM_JAMMED_WARNING

ESP_BLE_MESH_MECHANISM_JAMMED_ERROR

ESP_BLE_MESH_HEALTH_FAULT_ARRAY_SIZE

Type Definitions

typedef void (***esp_ble_mesh_health_client_cb_t**)(*esp_ble_mesh_health_client_cb_event_t* event, *esp_ble_mesh_health_client_cb_param_t* *param)

Bluetooth Mesh Health Client and Server Model function.

Health Client Model callback function type

Param event Event type
Param param Pointer to callback parameter

typedef void (***esp_ble_mesh_health_server_cb_t**)(*esp_ble_mesh_health_server_cb_event_t* event, *esp_ble_mesh_health_server_cb_param_t* *param)

Health Server Model callback function type.

Param event Event type
Param param Pointer to callback parameter

Enumerations

enum **esp_ble_mesh_health_client_cb_event_t**

This enum value is the event of Health Client Model

Values:

enumerator **ESP_BLE_MESH_HEALTH_CLIENT_GET_STATE_EVT**

enumerator **ESP_BLE_MESH_HEALTH_CLIENT_SET_STATE_EVT**

enumerator **ESP_BLE_MESH_HEALTH_CLIENT_PUBLISH_EVT**

enumerator **ESP_BLE_MESH_HEALTH_CLIENT_TIMEOUT_EVT**

enumerator **ESP_BLE_MESH_HEALTH_CLIENT_EVT_MAX**

enum **esp_ble_mesh_health_server_cb_event_t**

This enum value is the event of Health Server Model

Values:

enumerator **ESP_BLE_MESH_HEALTH_SERVER_FAULT_UPDATE_COMP_EVT**

enumerator **ESP_BLE_MESH_HEALTH_SERVER_FAULT_CLEAR_EVT**

enumerator **ESP_BLE_MESH_HEALTH_SERVER_FAULT_TEST_EVT**

enumerator **ESP_BLE_MESH_HEALTH_SERVER_ATTENTION_ON_EVT**

enumerator **ESP_BLE_MESH_HEALTH_SERVER_ATTENTION_OFF_EVT**

enumerator **ESP_BLE_MESH_HEALTH_SERVER_EVT_MAX**

Generic Client/Server Models

Header File

- components/bt/esp_ble_mesh/api/models/include/esp_ble_mesh_generic_model_api.h

Functions

esp_err_t **esp_ble_mesh_register_generic_client_callback**(*esp_ble_mesh_generic_client_cb_t* callback)

Register BLE Mesh Generic Client Model callback.

Parameters **callback** –**[in]** Pointer to the callback function.
Returns ESP_OK on success or error code otherwise.

esp_err_t **esp_ble_mesh_generic_client_get_state**(*esp_ble_mesh_client_common_param_t* *params, *esp_ble_mesh_generic_client_get_state_t* *get_state)

Get the value of Generic Server Model states using the Generic Client Model get messages.

Note: If you want to find the opcodes and corresponding meanings accepted by this API, please refer to esp_ble_mesh_generic_message_opcode_t in esp_ble_mesh_defs.h

---

Parameters
- **params** –**[in]** Pointer to BLE Mesh common client parameters.
- **get_state** –**[in]** Pointer to generic get message value. Shall not be set to NULL.

Returns ESP_OK on success or error code otherwise.

esp_err_t **esp_ble_mesh_generic_client_set_state**(*esp_ble_mesh_client_common_param_t* *params, *esp_ble_mesh_generic_client_set_state_t* *set_state)

Set the value of Generic Server Model states using the Generic Client Model set messages.

Note: If you want to find the opcodes and corresponding meanings accepted by this API, please refer to esp_ble_mesh_generic_message_opcode_t in esp_ble_mesh_defs.h

Parameters
- **params** –**[in]** Pointer to BLE Mesh common client parameters.
- **set_state** –**[in]** Pointer to generic set message value. Shall not be set to NULL.

Returns ESP_OK on success or error code otherwise.

esp_err_t **esp_ble_mesh_register_generic_server_callback**(*esp_ble_mesh_generic_server_cb_t* callback)

Register BLE Mesh Generic Server Model callback.

Parameters **callback** –**[in]** Pointer to the callback function.
Returns ESP_OK on success or error code otherwise.

Unions

union **esp_ble_mesh_generic_client_get_state_t**

#include <esp_ble_mesh_generic_model_api.h> Generic Client Model get message union.

Public Members

esp_ble_mesh_gen_user_property_get_t **user_property_get**

For ESP_BLE_MESH_MODEL_OP_GEN_USER_PROPERTY_GET

esp_ble_mesh_gen_admin_property_get_t **admin_property_get**

For ESP_BLE_MESH_MODEL_OP_GEN_ADMIN_PROPERTY_GET

esp_ble_mesh_gen_manufacturer_property_get_t **manufacturer_property_get**

For ESP_BLE_MESH_MODEL_OP_GEN_MANUFACTURER_PROPERTY_SET

esp_ble_mesh_gen_client_properties_get_t **client_properties_get**

For ESP_BLE_MESH_MODEL_OP_GEN_CLIENT_PROPERTIES_GET

union **esp_ble_mesh_generic_client_set_state_t**

#include <esp_ble_mesh_generic_model_api.h> Generic Client Model set message union.

Public Members

esp_ble_mesh_gen_onoff_set_t **onoff_set**

For ESP_BLE_MESH_MODEL_OP_GEN_ONOFF_SET & ESP_BLE_MESH_MODEL_OP_GEN_ONOFF_SET_UN

esp_ble_mesh_gen_level_set_t **level_set**

For ESP_BLE_MESH_MODEL_OP_GEN_LEVEL_SET & ESP_BLE_MESH_MODEL_OP_GEN_LEVEL_SET_UN

esp_ble_mesh_gen_delta_set_t **delta_set**

For ESP_BLE_MESH_MODEL_OP_GEN_DELTA_SET & ESP_BLE_MESH_MODEL_OP_GEN_DELTA_SET_UN

esp_ble_mesh_gen_move_set_t **move_set**

For ESP_BLE_MESH_MODEL_OP_GEN_MOVE_SET & ESP_BLE_MESH_MODEL_OP_GEN_MOVE_SET_UNA

esp_ble_mesh_gen_def_trans_time_set_t **def_trans_time_set**

For ESP_BLE_MESH_MODEL_OP_GEN_DEF_TRANS_TIME_SET & ESP_BLE_MESH_MODEL_OP_GEN_DEF_TRANS_TIME_SET_UNACK

esp_ble_mesh_gen_onpowerup_set_t **power_set**

For ESP_BLE_MESH_MODEL_OP_GEN_ONPOWERUP_SET & ESP_BLE_MESH_MODEL_OP_GEN_ONPOWERUP_SET_UNACK

esp_ble_mesh_gen_power_level_set_t **power_level_set**

For ESP_BLE_MESH_MODEL_OP_GEN_POWER_LEVEL_SET & ESP_BLE_MESH_MODEL_OP_GEN_POWER_LEVEL_SET_UNACK

esp_ble_mesh_gen_power_default_set_t **power_default_set**

For ESP_BLE_MESH_MODEL_OP_GEN_POWER_DEFAULT_SET & ESP_BLE_MESH_MODEL_OP_GEN_POWER_DEFAULT_SET_UNACK

esp_ble_mesh_gen_power_range_set_t **power_range_set**

For ESP_BLE_MESH_MODEL_OP_GEN_POWER_RANGE_SET & ESP_BLE_MESH_MODEL_OP_GEN_POWER_RANGE_SET_UNACK

esp_ble_mesh_gen_loc_global_set_t **loc_global_set**

For ESP_BLE_MESH_MODEL_OP_GEN_LOC_GLOBAL_SET & ESP_BLE_MESH_MODEL_OP_GEN_LOC_GLOBAL_SET_UNACK

esp_ble_mesh_gen_loc_local_set_t **loc_local_set**

For ESP_BLE_MESH_MODEL_OP_GEN_LOC_LOCAL_SET & ESP_BLE_MESH_MODEL_OP_GEN_LOC_LOCAL_SET_UNACK

esp_ble_mesh_gen_user_property_set_t **user_property_set**

For ESP_BLE_MESH_MODEL_OP_GEN_USER_PROPERTY_SET & ESP_BLE_MESH_MODEL_OP_GEN_USER_PROPERTY_SET_UNACK

esp_ble_mesh_gen_admin_property_set_t **admin_property_set**

For ESP_BLE_MESH_MODEL_OP_GEN_ADMIN_PROPERTY_SET & ESP_BLE_MESH_MODEL_OP_GEN_ADMIN_PROPERTY_SET_UNACK

esp_ble_mesh_gen_manufacturer_property_set_t **manufacturer_property_set**

For ESP_BLE_MESH_MODEL_OP_GEN_MANUFACTURER_PROPERTY_SET & ESP_BLE_MESH_MODEL_OP_GEN_MANUFACTURER_PROPERTY_SET_UNACK

union **esp_ble_mesh_gen_client_status_cb_t**

#include <esp_ble_mesh_generic_model_api.h> Generic Client Model received message union.

Public Members

esp_ble_mesh_gen_onoff_status_cb_t **onoff_status**

For ESP_BLE_MESH_MODEL_OP_GEN_ONOFF_STATUS

esp_ble_mesh_gen_level_status_cb_t **level_status**

For ESP_BLE_MESH_MODEL_OP_GEN_LEVEL_STATUS

esp_ble_mesh_gen_def_trans_time_status_cb_t **def_trans_time_status**

For ESP_BLE_MESH_MODEL_OP_GEN_DEF_TRANS_TIME_STATUS

esp_ble_mesh_gen_onpowerup_status_cb_t **onpowerup_status**

For ESP_BLE_MESH_MODEL_OP_GEN_ONPOWERUP_STATUS

esp_ble_mesh_gen_power_level_status_cb_t **power_level_status**

For ESP_BLE_MESH_MODEL_OP_GEN_POWER_LEVEL_STATUS

esp_ble_mesh_gen_power_last_status_cb_t **power_last_status**

For ESP_BLE_MESH_MODEL_OP_GEN_POWER_LAST_STATUS

esp_ble_mesh_gen_power_default_status_cb_t **power_default_status**

For ESP_BLE_MESH_MODEL_OP_GEN_POWER_DEFAULT_STATUS

esp_ble_mesh_gen_power_range_status_cb_t **power_range_status**

For ESP_BLE_MESH_MODEL_OP_GEN_POWER_RANGE_STATUS

esp_ble_mesh_gen_battery_status_cb_t **battery_status**

For ESP_BLE_MESH_MODEL_OP_GEN_BATTERY_STATUS

esp_ble_mesh_gen_loc_global_status_cb_t **location_global_status**

For ESP_BLE_MESH_MODEL_OP_GEN_LOC_GLOBAL_STATUS

esp_ble_mesh_gen_loc_local_status_cb_t **location_local_status**

ESP_BLE_MESH_MODEL_OP_GEN_LOC_LOCAL_STATUS

esp_ble_mesh_gen_user_properties_status_cb_t **user_properties_status**

ESP_BLE_MESH_MODEL_OP_GEN_USER_PROPERTIES_STATUS

esp_ble_mesh_gen_user_property_status_cb_t **user_property_status**

ESP_BLE_MESH_MODEL_OP_GEN_USER_PROPERTY_STATUS

esp_ble_mesh_gen_admin_properties_status_cb_t **admin_properties_status**

ESP_BLE_MESH_MODEL_OP_GEN_ADMIN_PROPERTIES_STATUS

esp_ble_mesh_gen_admin_property_status_cb_t **admin_property_status**

ESP_BLE_MESH_MODEL_OP_GEN_ADMIN_PROPERTY_STATUS

esp_ble_mesh_gen_manufacturer_properties_status_cb_t **manufacturer_properties_status**

ESP_BLE_MESH_MODEL_OP_GEN_MANUFACTURER_PROPERTIES_STATUS

esp_ble_mesh_gen_manufacturer_property_status_cb_t **manufacturer_property_status**

ESP_BLE_MESH_MODEL_OP_GEN_MANUFACTURER_PROPERTY_STATUS

esp_ble_mesh_gen_client_properties_status_cb_t **client_properties_status**

ESP_BLE_MESH_MODEL_OP_GEN_CLIENT_PROPERTIES_STATUS

union **esp_ble_mesh_generic_server_state_change_t**

#include <esp_ble_mesh_generic_model_api.h> Generic Server Model state change value union.

Public Members

esp_ble_mesh_state_change_gen_onoff_set_t **onoff_set**

The recv_op in ctx can be used to decide which state is changed.Generic OnOff Set

esp_ble_mesh_state_change_gen_level_set_t **level_set**

Generic Level Set

esp_ble_mesh_state_change_gen_delta_set_t **delta_set**

Generic Delta Set

esp_ble_mesh_state_change_gen_move_set_t **move_set**

Generic Move Set

esp_ble_mesh_state_change_gen_def_trans_time_set_t **def_trans_time_set**

Generic Default Transition Time Set

esp_ble_mesh_state_change_gen_onpowerup_set_t **onpowerup_set**

Generic OnPowerUp Set

esp_ble_mesh_state_change_gen_power_level_set_t **power_level_set**

Generic Power Level Set

esp_ble_mesh_state_change_gen_power_default_set_t **power_default_set**

Generic Power Default Set

esp_ble_mesh_state_change_gen_power_range_set_t **power_range_set**

Generic Power Range Set

esp_ble_mesh_state_change_gen_loc_global_set_t **loc_global_set**

Generic Location Global Set

esp_ble_mesh_state_change_gen_loc_local_set_t **loc_local_set**

Generic Location Local Set

esp_ble_mesh_state_change_gen_user_property_set_t **user_property_set**

Generic User Property Set

esp_ble_mesh_state_change_gen_admin_property_set_t **admin_property_set**

Generic Admin Property Set

esp_ble_mesh_state_change_gen_manu_property_set_t **manu_property_set**

Generic Manufacturer Property Set

union **esp_ble_mesh_generic_server_recv_get_msg_t**

#include <esp_ble_mesh_generic_model_api.h> Generic Server Model received get message union.

Public Members

esp_ble_mesh_server_recv_gen_user_property_get_t **user_property**

Generic User Property Get

esp_ble_mesh_server_recv_gen_admin_property_get_t **admin_property**

Generic Admin Property Get

esp_ble_mesh_server_recv_gen_manufacturer_property_get_t **manu_property**

Generic Manufacturer Property Get

esp_ble_mesh_server_recv_gen_client_properties_get_t **client_properties**

Generic Client Properties Get

union **esp_ble_mesh_generic_server_recv_set_msg_t**

#include <esp_ble_mesh_generic_model_api.h> Generic Server Model received set message union.

Public Members

esp_ble_mesh_server_recv_gen_onoff_set_t **onoff**

Generic OnOff Set/Generic OnOff Set Unack

esp_ble_mesh_server_recv_gen_level_set_t **level**

Generic Level Set/Generic Level Set Unack

esp_ble_mesh_server_recv_gen_delta_set_t **delta**

Generic Delta Set/Generic Delta Set Unack

esp_ble_mesh_server_recv_gen_move_set_t **move**

Generic Move Set/Generic Move Set Unack

esp_ble_mesh_server_recv_gen_def_trans_time_set_t **def_trans_time**

Generic Default Transition Time Set/Generic Default Transition Time Set Unack

esp_ble_mesh_server_recv_gen_onpowerup_set_t **onpowerup**

Generic OnPowerUp Set/Generic OnPowerUp Set Unack

esp_ble_mesh_server_recv_gen_power_level_set_t **power_level**

Generic Power Level Set/Generic Power Level Set Unack

esp_ble_mesh_server_recv_gen_power_default_set_t **power_default**

Generic Power Default Set/Generic Power Default Set Unack

esp_ble_mesh_server_recv_gen_power_range_set_t **power_range**

Generic Power Range Set/Generic Power Range Set Unack

esp_ble_mesh_server_recv_gen_loc_global_set_t **location_global**

Generic Location Global Set/Generic Location Global Set Unack

esp_ble_mesh_server_recv_gen_loc_local_set_t **location_local**

Generic Location Local Set/Generic Location Local Set Unack

esp_ble_mesh_server_recv_gen_user_property_set_t **user_property**

Generic User Property Set/Generic User Property Set Unack

esp_ble_mesh_server_recv_gen_admin_property_set_t **admin_property**

Generic Admin Property Set/Generic Admin Property Set Unack

esp_ble_mesh_server_recv_gen_manufacturer_property_set_t **manu_property**

Generic Manufacturer Property Set/Generic Manufacturer Property Set Unack

union **esp_ble_mesh_generic_server_cb_value_t**

#include <esp_ble_mesh_generic_model_api.h> Generic Server Model callback value union.

Public Members

esp_ble_mesh_generic_server_state_change_t **state_change**

ESP_BLE_MESH_GENERIC_SERVER_STATE_CHANGE_EVT

esp_ble_mesh_generic_server_recv_get_msg_t **get**

ESP_BLE_MESH_GENERIC_SERVER_RECV_GET_MSG_EVT

esp_ble_mesh_generic_server_recv_set_msg_t **set**

ESP_BLE_MESH_GENERIC_SERVER_RECV_SET_MSG_EVT

Structures

struct **esp_ble_mesh_gen_onoff_set_t**

Bluetooth Mesh Generic Client Model Get and Set parameters structure.

Parameters of Generic OnOff Set.

Public Members

bool **op_en**

Indicate if optional parameters are included

uint8_t **onoff**

Target value of Generic OnOff state

uint8_t **tid**

Transaction ID

uint8_t **trans_time**

Time to complete state transition (optional)

uint8_t **delay**

Indicate message execution delay (C.1)

struct **esp_ble_mesh_gen_level_set_t**

Parameters of Generic Level Set.

Public Members

bool **op_en**

Indicate if optional parameters are included

int16_t **level**

Target value of Generic Level state

uint8_t **tid**

Transaction ID

uint8_t **trans_time**

Time to complete state transition (optional)

uint8_t **delay**

Indicate message execution delay (C.1)

struct **esp_ble_mesh_gen_delta_set_t**

Parameters of Generic Delta Set.

Public Members

bool **op_en**

Indicate if optional parameters are included

int32_t **level**

Delta change of Generic Level state

uint8_t **tid**

Transaction ID

uint8_t **trans_time**

Time to complete state transition (optional)

uint8_t **delay**

Indicate message execution delay (C.1)

struct **esp_ble_mesh_gen_move_set_t**

Parameters of Generic Move Set.

Public Members

bool **op_en**

Indicate if optional parameters are included

int16_t **delta_level**

Delta Level step to calculate Move speed for Generic Level state

uint8_t **tid**

Transaction ID

uint8_t **trans_time**

Time to complete state transition (optional)

uint8_t **delay**

Indicate message execution delay (C.1)

struct **esp_ble_mesh_gen_def_trans_time_set_t**

Parameter of Generic Default Transition Time Set.

Public Members

uint8_t **trans_time**

The value of the Generic Default Transition Time state

struct **esp_ble_mesh_gen_onpowerup_set_t**

Parameter of Generic OnPowerUp Set.

Public Members

uint8_t **onpowerup**

The value of the Generic OnPowerUp state

struct **esp_ble_mesh_gen_power_level_set_t**

Parameters of Generic Power Level Set.

Public Members

bool **op_en**

Indicate if optional parameters are included

uint16_t **power**

Target value of Generic Power Actual state

uint8_t **tid**

Transaction ID

uint8_t **trans_time**

Time to complete state transition (optional)

uint8_t **delay**

Indicate message execution delay (C.1)

struct **esp_ble_mesh_gen_power_default_set_t**

Parameter of Generic Power Default Set.

Public Members

uint16_t **power**

The value of the Generic Power Default state

struct **esp_ble_mesh_gen_power_range_set_t**

Parameters of Generic Power Range Set.

Public Members

uint16_t **range_min**

Value of Range Min field of Generic Power Range state

uint16_t **range_max**

Value of Range Max field of Generic Power Range state

struct **esp_ble_mesh_gen_loc_global_set_t**

Parameters of Generic Location Global Set.

Public Members

int32_t **global_latitude**

Global Coordinates (Latitude)

int32_t **global_longitude**

Global Coordinates (Longitude)

int16_t **global_altitude**

Global Altitude

struct **esp_ble_mesh_gen_loc_local_set_t**

Parameters of Generic Location Local Set.

Public Members

int16_t **local_north**

Local Coordinates (North)

int16_t **local_east**

Local Coordinates (East)

int16_t **local_altitude**

Local Altitude

uint8_t **floor_number**

Floor Number

uint16_t **uncertainty**

Uncertainty

struct **esp_ble_mesh_gen_user_property_get_t**

Parameter of Generic User Property Get.

Public Members

uint16_t **property_id**

Property ID identifying a Generic User Property

struct **esp_ble_mesh_gen_user_property_set_t**

Parameters of Generic User Property Set.

Public Members

uint16_t **property_id**

Property ID identifying a Generic User Property

struct net_buf_simple ***property_value**

Raw value for the User Property

struct **esp_ble_mesh_gen_admin_property_get_t**

Parameter of Generic Admin Property Get.

Public Members

uint16_t **property_id**

Property ID identifying a Generic Admin Property

struct **esp_ble_mesh_gen_admin_property_set_t**

Parameters of Generic Admin Property Set.

Public Members

uint16_t **property_id**

Property ID identifying a Generic Admin Property

uint8_t **user_access**

Enumeration indicating user access

struct net_buf_simple ***property_value**

Raw value for the Admin Property

struct **esp_ble_mesh_gen_manufacturer_property_get_t**

Parameter of Generic Manufacturer Property Get.

Public Members

uint16_t **property_id**

Property ID identifying a Generic Manufacturer Property

struct **esp_ble_mesh_gen_manufacturer_property_set_t**

Parameters of Generic Manufacturer Property Set.

Public Members

uint16_t **property_id**

Property ID identifying a Generic Manufacturer Property

uint8_t **user_access**

Enumeration indicating user access

struct **esp_ble_mesh_gen_client_properties_get_t**

Parameter of Generic Client Properties Get.

Public Members

uint16_t **property_id**

A starting Client Property ID present within an element

struct **esp_ble_mesh_gen_onoff_status_cb_t**

Bluetooth Mesh Generic Client Model Get and Set callback parameters structure.

Parameters of Generic OnOff Status.

Public Members

bool **op_en**

Indicate if optional parameters are included

uint8_t **present_onoff**

Current value of Generic OnOff state

uint8_t **target_onoff**

Target value of Generic OnOff state (optional)

uint8_t **remain_time**

Time to complete state transition (C.1)

struct **esp_ble_mesh_gen_level_status_cb_t**

Parameters of Generic Level Status.

Public Members

bool **op_en**

Indicate if optional parameters are included

int16_t **present_level**

Current value of Generic Level state

int16_t **target_level**

Target value of the Generic Level state (optional)

uint8_t **remain_time**

Time to complete state transition (C.1)

struct **esp_ble_mesh_gen_def_trans_time_status_cb_t**

Parameter of Generic Default Transition Time Status.

Public Members

uint8_t **trans_time**

The value of the Generic Default Transition Time state

struct **esp_ble_mesh_gen_onpowerup_status_cb_t**

Parameter of Generic OnPowerUp Status.

Public Members

uint8_t **onpowerup**

The value of the Generic OnPowerUp state

struct **esp_ble_mesh_gen_power_level_status_cb_t**

Parameters of Generic Power Level Status.

Public Members

bool **op_en**

Indicate if optional parameters are included

uint16_t **present_power**

Current value of Generic Power Actual state

uint16_t **target_power**

Target value of Generic Power Actual state (optional)

uint8_t **remain_time**

Time to complete state transition (C.1)

struct **esp_ble_mesh_gen_power_last_status_cb_t**

Parameter of Generic Power Last Status.

Public Members

uint16_t **power**

The value of the Generic Power Last state

struct **esp_ble_mesh_gen_power_default_status_cb_t**

Parameter of Generic Power Default Status.

Public Members

uint16_t **power**

The value of the Generic Default Last state

struct **esp_ble_mesh_gen_power_range_status_cb_t**

Parameters of Generic Power Range Status.

Public Members

uint8_t **status_code**

Status Code for the request message

uint16_t **range_min**

Value of Range Min field of Generic Power Range state

uint16_t **range_max**

Value of Range Max field of Generic Power Range state

struct **esp_ble_mesh_gen_battery_status_cb_t**

Parameters of Generic Battery Status.

Public Members

uint32_t **battery_level**

Value of Generic Battery Level state

uint32_t **time_to_discharge**

Value of Generic Battery Time to Discharge state

uint32_t **time_to_charge**

Value of Generic Battery Time to Charge state

uint32_t **flags**

Value of Generic Battery Flags state

struct **esp_ble_mesh_gen_loc_global_status_cb_t**

Parameters of Generic Location Global Status.

Public Members

int32_t **global_latitude**

Global Coordinates (Latitude)

int32_t **global_longitude**

Global Coordinates (Longitude)

int16_t **global_altitude**

Global Altitude

struct **esp_ble_mesh_gen_loc_local_status_cb_t**

Parameters of Generic Location Local Status.

Public Members

int16_t **local_north**

Local Coordinates (North)

int16_t **local_east**

Local Coordinates (East)

int16_t **local_altitude**

Local Altitude

uint8_t **floor_number**

Floor Number

uint16_t **uncertainty**

Uncertainty

struct **esp_ble_mesh_gen_user_properties_status_cb_t**

Parameter of Generic User Properties Status.

Public Members

struct net_buf_simple ***property_ids**

Buffer contains a sequence of N User Property IDs

struct **esp_ble_mesh_gen_user_property_status_cb_t**

Parameters of Generic User Property Status.

Public Members

bool **op_en**

Indicate if optional parameters are included

uint16_t **property_id**

Property ID identifying a Generic User Property

uint8_t **user_access**

Enumeration indicating user access (optional)

struct net_buf_simple ***property_value**

Raw value for the User Property (C.1)

struct **esp_ble_mesh_gen_admin_properties_status_cb_t**

Parameter of Generic Admin Properties Status.

Public Members

struct net_buf_simple ***property_ids**

Buffer contains a sequence of N Admin Property IDs

struct **esp_ble_mesh_gen_admin_property_status_cb_t**

Parameters of Generic Admin Property Status.

Public Members

bool **op_en**

Indicate if optional parameters are included

uint16_t **property_id**

Property ID identifying a Generic Admin Property

uint8_t **user_access**

Enumeration indicating user access (optional)

struct net_buf_simple ***property_value**

Raw value for the Admin Property (C.1)

struct **esp_ble_mesh_gen_manufacturer_properties_status_cb_t**

Parameter of Generic Manufacturer Properties Status.

Public Members

struct net_buf_simple ***property_ids**

Buffer contains a sequence of N Manufacturer Property IDs

struct **esp_ble_mesh_gen_manufacturer_property_status_cb_t**

Parameters of Generic Manufacturer Property Status.

Public Members

bool **op_en**

Indicate if optional parameters are included

uint16_t **property_id**

Property ID identifying a Generic Manufacturer Property

uint8_t **user_access**

Enumeration indicating user access (optional)

struct net_buf_simple ***property_value**

Raw value for the Manufacturer Property (C.1)

struct **esp_ble_mesh_gen_client_properties_status_cb_t**

Parameter of Generic Client Properties Status.

Public Members

struct net_buf_simple ***property_ids**

Buffer contains a sequence of N Client Property IDs

struct **esp_ble_mesh_generic_client_cb_param_t**

Generic Client Model callback parameters

Public Members

int **error_code**

Appropriate error code

esp_ble_mesh_client_common_param_t ***params**

The client common parameters.

esp_ble_mesh_gen_client_status_cb_t **status_cb**

The generic status message callback values

struct **esp_ble_mesh_gen_onoff_state_t**

Parameters of Generic OnOff state

Public Members

uint8_t **onoff**

The present value of the Generic OnOff state

uint8_t **target_onoff**

The target value of the Generic OnOff state

struct **esp_ble_mesh_gen_onoff_srv_t**

User data of Generic OnOff Server Model

Public Members

esp_ble_mesh_model_t ***model**

Pointer to the Generic OnOff Server Model. Initialized internally.

esp_ble_mesh_server_rsp_ctrl_t **rsp_ctrl**

Response control of the server model received messages

esp_ble_mesh_gen_onoff_state_t **state**

Parameters of the Generic OnOff state

esp_ble_mesh_last_msg_info_t **last**

Parameters of the last received set message

esp_ble_mesh_state_transition_t **transition**

Parameters of state transition

struct **esp_ble_mesh_gen_level_state_t**

Parameters of Generic Level state

Public Members

int16_t **level**

The present value of the Generic Level state

int16_t **target_level**

The target value of the Generic Level state

int16_t **last_level**

When a new transaction starts, level should be set to last_last, and use "level + incoming delta" to calculate the target level. In another word, "last_level" is used to record "level" of the last transaction, and "last_delta" is used to record the previously received delta_level value.The last value of the Generic Level state

int32_t **last_delta**

The last delta change of the Generic Level state

bool **move_start**

Indicate if the transition of the Generic Level state has been started

bool **positive**

Indicate if the transition is positive or negative

struct **esp_ble_mesh_gen_level_srv_t**

User data of Generic Level Server Model

Public Members

esp_ble_mesh_model_t ***model**

Pointer to the Generic Level Server Model. Initialized internally.

esp_ble_mesh_server_rsp_ctrl_t **rsp_ctrl**

Response control of the server model received messages

esp_ble_mesh_gen_level_state_t **state**

Parameters of the Generic Level state

esp_ble_mesh_last_msg_info_t **last**

Parameters of the last received set message

esp_ble_mesh_state_transition_t **transition**

Parameters of state transition

int32_t **tt_delta_level**

Delta change value of level state transition

struct **esp_ble_mesh_gen_def_trans_time_state_t**

Parameter of Generic Default Transition Time state

Public Members

uint8_t **trans_time**

The value of the Generic Default Transition Time state

struct **esp_ble_mesh_gen_def_trans_time_srv_t**

User data of Generic Default Transition Time Server Model

Public Members

esp_ble_mesh_model_t ***model**

Pointer to the Generic Default Transition Time Server Model. Initialized internally.

esp_ble_mesh_server_rsp_ctrl_t **rsp_ctrl**

Response control of the server model received messages

esp_ble_mesh_gen_def_trans_time_state_t **state**

Parameters of the Generic Default Transition Time state

struct **esp_ble_mesh_gen_onpowerup_state_t**

Parameter of Generic OnPowerUp state

Public Members

uint8_t **onpowerup**

The value of the Generic OnPowerUp state

struct **esp_ble_mesh_gen_power_onoff_srv_t**

User data of Generic Power OnOff Server Model

Public Members

esp_ble_mesh_model_t ***model**

Pointer to the Generic Power OnOff Server Model. Initialized internally.

esp_ble_mesh_server_rsp_ctrl_t **rsp_ctrl**

Response control of the server model received messages

esp_ble_mesh_gen_onpowerup_state_t ***state**

Parameters of the Generic OnPowerUp state

struct **esp_ble_mesh_gen_power_onoff_setup_srv_t**

User data of Generic Power OnOff Setup Server Model

Public Members

esp_ble_mesh_model_t ***model**

Pointer to the Generic Power OnOff Setup Server Model. Initialized internally.

esp_ble_mesh_server_rsp_ctrl_t **rsp_ctrl**

Response control of the server model received messages

esp_ble_mesh_gen_onpowerup_state_t ***state**

Parameters of the Generic OnPowerUp state

struct **esp_ble_mesh_gen_power_level_state_t**

Parameters of Generic Power Level state

Public Members

uint16_t **power_actual**

The present value of the Generic Power Actual state

uint16_t **target_power_actual**

The target value of the Generic Power Actual state

uint16_t **power_last**

The value of the Generic Power Last state

uint16_t **power_default**

The value of the Generic Power Default state

uint8_t **status_code**

The status code of setting Generic Power Range state

uint16_t **power_range_min**

The minimum value of the Generic Power Range state

uint16_t **power_range_max**

The maximum value of the Generic Power Range state

struct **esp_ble_mesh_gen_power_level_srv_t**

User data of Generic Power Level Server Model

Public Members

esp_ble_mesh_model_t ***model**

Pointer to the Generic Power Level Server Model. Initialized internally.

esp_ble_mesh_server_rsp_ctrl_t **rsp_ctrl**

Response control of the server model received messages

esp_ble_mesh_gen_power_level_state_t ***state**

Parameters of the Generic Power Level state

esp_ble_mesh_last_msg_info_t **last**

Parameters of the last received set message

esp_ble_mesh_state_transition_t **transition**

Parameters of state transition

int32_t **tt_delta_level**

Delta change value of level state transition

struct **esp_ble_mesh_gen_power_level_setup_srv_t**

User data of Generic Power Level Setup Server Model

Public Members

esp_ble_mesh_model_t ***model**

Pointer to the Generic Power Level Setup Server Model. Initialized internally.

esp_ble_mesh_server_rsp_ctrl_t **rsp_ctrl**

Response control of the server model received messages

esp_ble_mesh_gen_power_level_state_t ***state**

Parameters of the Generic Power Level state

struct **esp_ble_mesh_gen_battery_state_t**

Parameters of Generic Battery state

Public Members

uint32_t **battery_level**

The value of the Generic Battery Level state

uint32_t **time_to_discharge**

The value of the Generic Battery Time to Discharge state

uint32_t **time_to_charge**

The value of the Generic Battery Time to Charge state

uint32_t **battery_flags**

The value of the Generic Battery Flags state

struct **esp_ble_mesh_gen_battery_srv_t**

User data of Generic Battery Server Model

Public Members

esp_ble_mesh_model_t ***model**

Pointer to the Generic Battery Server Model. Initialized internally.

esp_ble_mesh_server_rsp_ctrl_t **rsp_ctrl**

Response control of the server model received messages

esp_ble_mesh_gen_battery_state_t **state**

Parameters of the Generic Battery state

struct **esp_ble_mesh_gen_location_state_t**

Parameters of Generic Location state

Public Members

int32_t **global_latitude**

The value of the Global Latitude field

int32_t **global_longitude**

The value of the Global Longitude field

int16_t **global_altitude**

The value of the Global Altitude field

int16_t **local_north**

The value of the Local North field

int16_t **local_east**

The value of the Local East field

int16_t **local_altitude**

The value of the Local Altitude field

uint8_t **floor_number**

The value of the Floor Number field

uint16_t **uncertainty**

The value of the Uncertainty field

struct **esp_ble_mesh_gen_location_srv_t**

User data of Generic Location Server Model

Public Members

esp_ble_mesh_model_t ***model**

Pointer to the Generic Location Server Model. Initialized internally.

esp_ble_mesh_server_rsp_ctrl_t **rsp_ctrl**

Response control of the server model received messages

esp_ble_mesh_gen_location_state_t ***state**

Parameters of the Generic Location state

struct **esp_ble_mesh_gen_location_setup_srv_t**

User data of Generic Location Setup Server Model

Public Members

esp_ble_mesh_model_t ***model**

Pointer to the Generic Location Setup Server Model. Initialized internally.

esp_ble_mesh_server_rsp_ctrl_t **rsp_ctrl**

Response control of the server model received messages

esp_ble_mesh_gen_location_state_t ***state**

Parameters of the Generic Location state

struct **esp_ble_mesh_generic_property_t**

Parameters of Generic Property states

Public Members

uint16_t **id**

The value of User/Admin/Manufacturer Property ID

uint8_t **user_access**

The value of User Access field

uint8_t **admin_access**

The value of Admin Access field

uint8_t **manu_access**

The value of Manufacturer Access field

struct net_buf_simple ***val**

The value of User/Admin/Manufacturer Property

struct **esp_ble_mesh_gen_user_prop_srv_t**

User data of Generic User Property Server Model

Public Members

esp_ble_mesh_model_t ***model**

Pointer to the Generic User Property Server Model. Initialized internally.

esp_ble_mesh_server_rsp_ctrl_t **rsp_ctrl**

Response control of the server model received messages

uint8_t **property_count**

Generic User Property count

esp_ble_mesh_generic_property_t ***properties**

Parameters of the Generic User Property state

struct **esp_ble_mesh_gen_admin_prop_srv_t**

User data of Generic Admin Property Server Model

Public Members

esp_ble_mesh_model_t ***model**

Pointer to the Generic Admin Property Server Model. Initialized internally.

esp_ble_mesh_server_rsp_ctrl_t **rsp_ctrl**

Response control of the server model received messages

uint8_t **property_count**

Generic Admin Property count

esp_ble_mesh_generic_property_t ***properties**

Parameters of the Generic Admin Property state

struct **esp_ble_mesh_gen_manu_prop_srv_t**

User data of Generic Manufacturer Property Server Model

Public Members

esp_ble_mesh_model_t ***model**

Pointer to the Generic Manufacturer Property Server Model. Initialized internally.

esp_ble_mesh_server_rsp_ctrl_t **rsp_ctrl**

Response control of the server model received messages

uint8_t **property_count**

Generic Manufacturer Property count

esp_ble_mesh_generic_property_t ***properties**

Parameters of the Generic Manufacturer Property state

struct **esp_ble_mesh_gen_client_prop_srv_t**

User data of Generic Client Property Server Model

Public Members

esp_ble_mesh_model_t ***model**

Pointer to the Generic Client Property Server Model. Initialized internally.

esp_ble_mesh_server_rsp_ctrl_t **rsp_ctrl**

Response control of the server model received messages

uint8_t **id_count**

Generic Client Property ID count

uint16_t ***property_ids**

Parameters of the Generic Client Property state

struct **esp_ble_mesh_state_change_gen_onoff_set_t**

Parameter of Generic OnOff Set state change event

Public Members

uint8_t **onoff**

The value of Generic OnOff state

struct **esp_ble_mesh_state_change_gen_level_set_t**

Parameter of Generic Level Set state change event

Public Members

int16_t **level**

The value of Generic Level state

struct **esp_ble_mesh_state_change_gen_delta_set_t**

Parameter of Generic Delta Set state change event

Public Members

int16_t **level**

The value of Generic Level state

struct **esp_ble_mesh_state_change_gen_move_set_t**

Parameter of Generic Move Set state change event

Public Members

int16_t **level**

The value of Generic Level state

struct **esp_ble_mesh_state_change_gen_def_trans_time_set_t**

Parameter of Generic Default Transition Time Set state change event

Public Members

uint8_t **trans_time**

The value of Generic Default Transition Time state

struct **esp_ble_mesh_state_change_gen_onpowerup_set_t**

Parameter of Generic OnPowerUp Set state change event

Public Members

uint8_t **onpowerup**

The value of Generic OnPowerUp state

struct **esp_ble_mesh_state_change_gen_power_level_set_t**

Parameter of Generic Power Level Set state change event

Public Members

uint16_t **power**

The value of Generic Power Actual state

struct **esp_ble_mesh_state_change_gen_power_default_set_t**

Parameter of Generic Power Default Set state change event

Public Members

uint16_t **power**

The value of Generic Power Default state

struct **esp_ble_mesh_state_change_gen_power_range_set_t**

Parameters of Generic Power Range Set state change event

Public Members

uint16_t **range_min**

The minimum value of Generic Power Range state

uint16_t **range_max**

The maximum value of Generic Power Range state

struct **esp_ble_mesh_state_change_gen_loc_global_set_t**

Parameters of Generic Location Global Set state change event

Public Members

int32_t **latitude**

The Global Latitude value of Generic Location state

int32_t **longitude**

The Global Longitude value of Generic Location state

int16_t **altitude**

The Global Altitude value of Generic Location state

struct **esp_ble_mesh_state_change_gen_loc_local_set_t**

Parameters of Generic Location Local Set state change event

Public Members

int16_t **north**

The Local North value of Generic Location state

int16_t **east**

The Local East value of Generic Location state

int16_t **altitude**

The Local Altitude value of Generic Location state

uint8_t **floor_number**

The Floor Number value of Generic Location state

uint16_t **uncertainty**

The Uncertainty value of Generic Location state

struct **esp_ble_mesh_state_change_gen_user_property_set_t**

Parameters of Generic User Property Set state change event

Public Members

uint16_t **id**

The property id of Generic User Property state

struct net_buf_simple ***value**

The property value of Generic User Property state

struct **esp_ble_mesh_state_change_gen_admin_property_set_t**

Parameters of Generic Admin Property Set state change event

Public Members

uint16_t **id**

The property id of Generic Admin Property state

uint8_t **access**

The property access of Generic Admin Property state

struct net_buf_simple ***value**

The property value of Generic Admin Property state

struct **esp_ble_mesh_state_change_gen_manu_property_set_t**

Parameters of Generic Manufacturer Property Set state change event

Public Members

uint16_t **id**

The property id of Generic Manufacturer Property state

uint8_t **access**

The property value of Generic Manufacturer Property state

struct **esp_ble_mesh_server_recv_gen_user_property_get_t**

Context of the received Generic User Property Get message

Public Members

uint16_t **property_id**

Property ID identifying a Generic User Property

struct **esp_ble_mesh_server_recv_gen_admin_property_get_t**

Context of the received Generic Admin Property Get message

Public Members

uint16_t **property_id**

Property ID identifying a Generic Admin Property

struct **esp_ble_mesh_server_recv_gen_manufacturer_property_get_t**

Context of the received Generic Manufacturer Property message

Public Members

uint16_t **property_id**

Property ID identifying a Generic Manufacturer Property

struct **esp_ble_mesh_server_recv_gen_client_properties_get_t**

Context of the received Generic Client Properties Get message

Public Members

uint16_t **property_id**

A starting Client Property ID present within an element

struct **esp_ble_mesh_server_recv_gen_onoff_set_t**

Context of the received Generic OnOff Set message

Public Members

bool **op_en**

Indicate if optional parameters are included

uint8_t **onoff**

Target value of Generic OnOff state

uint8_t **tid**

Transaction ID

uint8_t **trans_time**

Time to complete state transition (optional)

uint8_t **delay**

Indicate message execution delay (C.1)

struct **esp_ble_mesh_server_recv_gen_level_set_t**

Context of the received Generic Level Set message

Public Members

bool **op_en**

Indicate if optional parameters are included

int16_t **level**

Target value of Generic Level state

uint8_t **tid**

Transaction ID

uint8_t **trans_time**

Time to complete state transition (optional)

uint8_t **delay**

Indicate message execution delay (C.1)

struct **esp_ble_mesh_server_recv_gen_delta_set_t**

Context of the received Generic Delta Set message

Public Members

bool **op_en**

Indicate if optional parameters are included

int32_t **delta_level**

Delta change of Generic Level state

uint8_t **tid**

Transaction ID

uint8_t **trans_time**

Time to complete state transition (optional)

uint8_t **delay**

Indicate message execution delay (C.1)

struct **esp_ble_mesh_server_recv_gen_move_set_t**

Context of the received Generic Move Set message

Public Members

bool **op_en**

Indicate if optional parameters are included

int16_t **delta_level**

Delta Level step to calculate Move speed for Generic Level state

uint8_t **tid**

Transaction ID

uint8_t **trans_time**

Time to complete state transition (optional)

uint8_t **delay**

Indicate message execution delay (C.1)

struct **esp_ble_mesh_server_recv_gen_def_trans_time_set_t**

Context of the received Generic Default Transition Time Set message

Public Members

uint8_t **trans_time**

The value of the Generic Default Transition Time state

struct **esp_ble_mesh_server_recv_gen_onpowerup_set_t**

Context of the received Generic OnPowerUp Set message

Public Members

uint8_t **onpowerup**

The value of the Generic OnPowerUp state

struct **esp_ble_mesh_server_recv_gen_power_level_set_t**

Context of the received Generic Power Level Set message

Public Members

bool **op_en**

Indicate if optional parameters are included

uint16_t **power**

Target value of Generic Power Actual state

uint8_t **tid**

Transaction ID

uint8_t **trans_time**

Time to complete state transition (optional)

uint8_t **delay**

Indicate message execution delay (C.1)

struct **esp_ble_mesh_server_recv_gen_power_default_set_t**

Context of the received Generic Power Default Set message

Public Members

uint16_t **power**

The value of the Generic Power Default state

struct **esp_ble_mesh_server_recv_gen_power_range_set_t**

Context of the received Generic Power Range Set message

Public Members

uint16_t **range_min**

Value of Range Min field of Generic Power Range state

uint16_t **range_max**

Value of Range Max field of Generic Power Range state

struct **esp_ble_mesh_server_recv_gen_loc_global_set_t**

Context of the received Generic Location Global Set message

Public Members

int32_t **global_latitude**

Global Coordinates (Latitude)

int32_t **global_longitude**

Global Coordinates (Longitude)

int16_t **global_altitude**

Global Altitude

struct **esp_ble_mesh_server_recv_gen_loc_local_set_t**

Context of the received Generic Location Local Set message

Public Members

int16_t **local_north**

Local Coordinates (North)

int16_t **local_east**

Local Coordinates (East)

int16_t **local_altitude**

Local Altitude

uint8_t **floor_number**

Floor Number

uint16_t **uncertainty**

Uncertainty

struct **esp_ble_mesh_server_recv_gen_user_property_set_t**

Context of the received Generic User Property Set message

Public Members

uint16_t **property_id**

Property ID identifying a Generic User Property

struct net_buf_simple ***property_value**

Raw value for the User Property

struct **esp_ble_mesh_server_recv_gen_admin_property_set_t**

Context of the received Generic Admin Property Set message

Public Members

uint16_t **property_id**

Property ID identifying a Generic Admin Property

uint8_t **user_access**

Enumeration indicating user access

struct net_buf_simple ***property_value**

Raw value for the Admin Property

struct **esp_ble_mesh_server_recv_gen_manufacturer_property_set_t**

Context of the received Generic Manufacturer Property Set message

Public Members

uint16_t **property_id**

Property ID identifying a Generic Manufacturer Property

uint8_t **user_access**

Enumeration indicating user access

struct **esp_ble_mesh_generic_server_cb_param_t**

Generic Server Model callback parameters

Public Members

esp_ble_mesh_model_t ***model**

Pointer to Generic Server Models

esp_ble_mesh_msg_ctx_t **ctx**

Context of the received messages

esp_ble_mesh_generic_server_cb_value_t **value**

Value of the received Generic Messages

Macros

ESP_BLE_MESH_MODEL_GEN_ONOFF_CLI(cli_pub, cli_data)

Define a new Generic OnOff Client Model.

Note: This API needs to be called for each element on which the application needs to have a Generic OnOff Client Model.

Parameters

- **cli_pub** –Pointer to the unique struct *esp_ble_mesh_model_pub_t*.
- **cli_data** –Pointer to the unique struct *esp_ble_mesh_client_t*.

Returns New Generic OnOff Client Model instance.

ESP_BLE_MESH_MODEL_GEN_LEVEL_CLI(cli_pub, cli_data)

Define a new Generic Level Client Model.

Note: This API needs to be called for each element on which the application needs to have a Generic Level Client Model.

Parameters
- **cli_pub** –Pointer to the unique struct *esp_ble_mesh_model_pub_t*.
- **cli_data** –Pointer to the unique struct *esp_ble_mesh_client_t*.

Returns New Generic Level Client Model instance.

ESP_BLE_MESH_MODEL_GEN_DEF_TRANS_TIME_CLI(cli_pub, cli_data)

Define a new Generic Default Transition Time Client Model.

Note: This API needs to be called for each element on which the application needs to have a Generic Default Transition Time Client Model.

Parameters
- **cli_pub** –Pointer to the unique struct *esp_ble_mesh_model_pub_t*.
- **cli_data** –Pointer to the unique struct *esp_ble_mesh_client_t*.

Returns New Generic Default Transition Time Client Model instance.

ESP_BLE_MESH_MODEL_GEN_POWER_ONOFF_CLI(cli_pub, cli_data)

Define a new Generic Power OnOff Client Model.

Note: This API needs to be called for each element on which the application needs to have a Generic Power OnOff Client Model.

Parameters
- **cli_pub** –Pointer to the unique struct *esp_ble_mesh_model_pub_t*.
- **cli_data** –Pointer to the unique struct *esp_ble_mesh_client_t*.

Returns New Generic Power OnOff Client Model instance.

ESP_BLE_MESH_MODEL_GEN_POWER_LEVEL_CLI(cli_pub, cli_data)

Define a new Generic Power Level Client Model.

Note: This API needs to be called for each element on which the application needs to have a Generic Power Level Client Model.

Parameters
- **cli_pub** –Pointer to the unique struct *esp_ble_mesh_model_pub_t*.
- **cli_data** –Pointer to the unique struct *esp_ble_mesh_client_t*.

Returns New Generic Power Level Client Model instance.

ESP_BLE_MESH_MODEL_GEN_BATTERY_CLI(cli_pub, cli_data)

Define a new Generic Battery Client Model.

Note: This API needs to be called for each element on which the application needs to have a Generic Battery Client Model.

Parameters
- **cli_pub** –Pointer to the unique struct *esp_ble_mesh_model_pub_t*.
- **cli_data** –Pointer to the unique struct *esp_ble_mesh_client_t*.

Returns New Generic Battery Client Model instance.

ESP_BLE_MESH_MODEL_GEN_LOCATION_CLI(cli_pub, cli_data)

Define a new Generic Location Client Model.

Note: This API needs to be called for each element on which the application needs to have a Generic Location Client Model.

Parameters
- **cli_pub** –Pointer to the unique struct *esp_ble_mesh_model_pub_t*.
- **cli_data** –Pointer to the unique struct *esp_ble_mesh_client_t*.

Returns New Generic Location Client Model instance.

ESP_BLE_MESH_MODEL_GEN_PROPERTY_CLI(cli_pub, cli_data)

Define a new Generic Property Client Model.

Note: This API needs to be called for each element on which the application needs to have a Generic Property Client Model.

Parameters
- **cli_pub** –Pointer to the unique struct *esp_ble_mesh_model_pub_t*.
- **cli_data** –Pointer to the unique struct *esp_ble_mesh_client_t*.

Returns New Generic Location Client Model instance.

ESP_BLE_MESH_MODEL_GEN_ONOFF_SRV(srv_pub, srv_data)

Generic Server Models related context.

Define a new Generic OnOff Server Model.

Note: 1. The Generic OnOff Server Model is a root model.

a. This model shall support model publication and model subscription.

Parameters
- **srv_pub** –Pointer to the unique struct *esp_ble_mesh_model_pub_t*.
- **srv_data** –Pointer to the unique struct *esp_ble_mesh_gen_onoff_srv_t*.

Returns New Generic OnOff Server Model instance.

ESP_BLE_MESH_MODEL_GEN_LEVEL_SRV(srv_pub, srv_data)

Define a new Generic Level Server Model.

Note: 1. The Generic Level Server Model is a root model.

a. This model shall support model publication and model subscription.

Parameters
- **srv_pub** –Pointer to the unique struct *esp_ble_mesh_model_pub_t*.
- **srv_data** –Pointer to the unique struct *esp_ble_mesh_gen_level_srv_t*.

Returns New Generic Level Server Model instance.

ESP_BLE_MESH_MODEL_GEN_DEF_TRANS_TIME_SRV(srv_pub, srv_data)

Define a new Generic Default Transition Time Server Model.

Note: 1. The Generic Default Transition Time Server Model is a root model.

a. This model shall support model publication and model subscription.

Parameters

- **srv_pub** –Pointer to the unique struct *esp_ble_mesh_model_pub_t*.
- **srv_data** –Pointer to the unique struct *esp_ble_mesh_gen_def_trans_time_srv_t*.

Returns New Generic Default Transition Time Server Model instance.

ESP_BLE_MESH_MODEL_GEN_POWER_ONOFF_SRV(srv_pub, srv_data)

Define a new Generic Power OnOff Server Model.

Note: 1. The Generic Power OnOff Server model extends the Generic OnOff Server model. When this model is present on an element, the corresponding Generic Power OnOff Setup Server model shall also be present.

a. This model may be used to represent a variety of devices that do not fit any of the model descriptions that have been defined but support the generic properties of On/Off.
b. This model shall support model publication and model subscription.

Parameters

- **srv_pub** –Pointer to the unique struct *esp_ble_mesh_model_pub_t*.
- **srv_data** –Pointer to the unique struct *esp_ble_mesh_gen_power_onoff_srv_t*.

Returns New Generic Power OnOff Server Model instance.

ESP_BLE_MESH_MODEL_GEN_POWER_ONOFF_SETUP_SRV(srv_pub, srv_data)

Define a new Generic Power OnOff Setup Server Model.

Note: 1. The Generic Power OnOff Setup Server model extends the Generic Power OnOff Server model and the Generic Default Transition Time Server model.

a. This model shall support model subscription.

Parameters

- **srv_pub** –Pointer to the unique struct *esp_ble_mesh_model_pub_t*.
- **srv_data** –Pointer to the unique struct *esp_ble_mesh_gen_power_onoff_setup_srv_t*.

Returns New Generic Power OnOff Setup Server Model instance.

ESP_BLE_MESH_MODEL_GEN_POWER_LEVEL_SRV(srv_pub, srv_data)

Define a new Generic Power Level Server Model.

Note: 1. The Generic Power Level Server model extends the Generic Power OnOff Server model and the Generic Level Server model. When this model is present on an Element, the corresponding Generic Power Level Setup Server model shall also be present.

a. This model shall support model publication and model subscription.

Parameters

- **srv_pub** –Pointer to the unique struct *esp_ble_mesh_model_pub_t*.
- **srv_data** –Pointer to the unique struct *esp_ble_mesh_gen_power_level_srv_t*.

Returns New Generic Power Level Server Model instance.

ESP_BLE_MESH_MODEL_GEN_POWER_LEVEL_SETUP_SRV (srv_pub, srv_data)

Define a new Generic Power Level Setup Server Model.

Note: 1. The Generic Power Level Setup Server model extends the Generic Power Level Server model and the Generic Power OnOff Setup Server model.

a. This model shall support model subscription.

Parameters

- **srv_pub** –Pointer to the unique struct *esp_ble_mesh_model_pub_t*.
- **srv_data** –Pointer to the unique struct *esp_ble_mesh_gen_power_level_setup_srv_t*.

Returns New Generic Power Level Setup Server Model instance.

ESP_BLE_MESH_MODEL_GEN_BATTERY_SRV (srv_pub, srv_data)

Define a new Generic Battery Server Model.

Note: 1. The Generic Battery Server Model is a root model.

a. This model shall support model publication and model subscription.
b. The model may be used to represent an element that is powered by a battery.

Parameters

- **srv_pub** –Pointer to the unique struct *esp_ble_mesh_model_pub_t*.
- **srv_data** –Pointer to the unique struct *esp_ble_mesh_gen_battery_srv_t*.

Returns New Generic Battery Server Model instance.

ESP_BLE_MESH_MODEL_GEN_LOCATION_SRV (srv_pub, srv_data)

Define a new Generic Location Server Model.

Note: 1. The Generic Location Server model is a root model. When this model is present on an Element, the corresponding Generic Location Setup Server model shall also be present.

a. This model shall support model publication and model subscription.
b. The model may be used to represent an element that knows its location (global or local).

Parameters

- **srv_pub** –Pointer to the unique struct *esp_ble_mesh_model_pub_t*.
- **srv_data** –Pointer to the unique struct *esp_ble_mesh_gen_location_srv_t*.

Returns New Generic Location Server Model instance.

ESP_BLE_MESH_MODEL_GEN_LOCATION_SETUP_SRV (srv_pub, srv_data)

Define a new Generic Location Setup Server Model.

Note: 1. The Generic Location Setup Server model extends the Generic Location Server model.

a. This model shall support model subscription.

Parameters

- **srv_pub** –Pointer to the unique struct *esp_ble_mesh_model_pub_t*.
- **srv_data** –Pointer to the unique struct *esp_ble_mesh_gen_location_setup_srv_t*.

Returns New Generic Location Setup Server Model instance.

ESP_BLE_MESH_MODEL_GEN_USER_PROP_SRV(srv_pub, srv_data)

Define a new Generic User Property Server Model.

Note: 1. The Generic User Property Server model is a root model.

a. This model shall support model publication and model subscription.

Parameters

- **srv_pub** –Pointer to the unique struct *esp_ble_mesh_model_pub_t*.
- **srv_data** –Pointer to the unique struct *esp_ble_mesh_gen_user_prop_srv_t*.

Returns New Generic User Property Server Model instance.

ESP_BLE_MESH_MODEL_GEN_ADMIN_PROP_SRV(srv_pub, srv_data)

Define a new Generic Admin Property Server Model.

Note: 1. The Generic Admin Property Server model extends the Generic User Property Server model.

a. This model shall support model publication and model subscription.

Parameters

- **srv_pub** –Pointer to the unique struct *esp_ble_mesh_model_pub_t*.
- **srv_data** –Pointer to the unique struct *esp_ble_mesh_gen_admin_prop_srv_t*.

Returns New Generic Admin Property Server Model instance.

ESP_BLE_MESH_MODEL_GEN_MANUFACTURER_PROP_SRV(srv_pub, srv_data)

Define a new Generic Manufacturer Property Server Model.

Note: 1. The Generic Manufacturer Property Server model extends the Generic User Property Server model.

a. This model shall support model publication and model subscription.

Parameters

- **srv_pub** –Pointer to the unique struct *esp_ble_mesh_model_pub_t*.
- **srv_data** –Pointer to the unique struct *esp_ble_mesh_gen_manu_prop_srv_t*.

Returns New Generic Manufacturer Property Server Model instance.

ESP_BLE_MESH_MODEL_GEN_CLIENT_PROP_SRV(srv_pub, srv_data)

Define a new Generic User Property Server Model.

Note: 1. The Generic Client Property Server model is a root model.

a. This model shall support model publication and model subscription.

Parameters

- **srv_pub** –Pointer to the unique struct *esp_ble_mesh_model_pub_t*.
- **srv_data** –Pointer to the unique struct *esp_ble_mesh_gen_client_prop_srv_t*.

Returns New Generic Client Property Server Model instance.

Type Definitions

typedef void (*`esp_ble_mesh_generic_client_cb_t`)(*esp_ble_mesh_generic_client_cb_event_t* event, *esp_ble_mesh_generic_client_cb_param_t* *param)

Bluetooth Mesh Generic Client Model function.

Generic Client Model callback function type

Param event Event type
Param param Pointer to callback parameter

typedef void (*`esp_ble_mesh_generic_server_cb_t`)(*esp_ble_mesh_generic_server_cb_event_t* event, *esp_ble_mesh_generic_server_cb_param_t* *param)

Bluetooth Mesh Generic Server Model function.

Generic Server Model callback function type

Param event Event type
Param param Pointer to callback parameter

Enumerations

enum `esp_ble_mesh_generic_client_cb_event_t`

This enum value is the event of Generic Client Model

Values:

enumerator `ESP_BLE_MESH_GENERIC_CLIENT_GET_STATE_EVT`

enumerator `ESP_BLE_MESH_GENERIC_CLIENT_SET_STATE_EVT`

enumerator `ESP_BLE_MESH_GENERIC_CLIENT_PUBLISH_EVT`

enumerator `ESP_BLE_MESH_GENERIC_CLIENT_TIMEOUT_EVT`

enumerator `ESP_BLE_MESH_GENERIC_CLIENT_EVT_MAX`

enum `esp_ble_mesh_gen_user_prop_access_t`

This enum value is the access value of Generic User Property

Values:

enumerator `ESP_BLE_MESH_GEN_USER_ACCESS_PROHIBIT`

enumerator `ESP_BLE_MESH_GEN_USER_ACCESS_READ`

enumerator `ESP_BLE_MESH_GEN_USER_ACCESS_WRITE`

enumerator `ESP_BLE_MESH_GEN_USER_ACCESS_READ_WRITE`

enum `esp_ble_mesh_gen_admin_prop_access_t`

This enum value is the access value of Generic Admin Property

Values:

enumerator `ESP_BLE_MESH_GEN_ADMIN_NOT_USER_PROP`

enumerator **ESP_BLE_MESH_GEN_ADMIN_ACCESS_READ**

enumerator **ESP_BLE_MESH_GEN_ADMIN_ACCESS_WRITE**

enumerator **ESP_BLE_MESH_GEN_ADMIN_ACCESS_READ_WRITE**

enum **esp_ble_mesh_gen_manu_prop_access_t**

This enum value is the access value of Generic Manufacturer Property

Values:

enumerator **ESP_BLE_MESH_GEN_MANU_NOT_USER_PROP**

enumerator **ESP_BLE_MESH_GEN_MANU_ACCESS_READ**

enum **esp_ble_mesh_generic_server_cb_event_t**

This enum value is the event of Generic Server Model

Values:

enumerator **ESP_BLE_MESH_GENERIC_SERVER_STATE_CHANGE_EVT**

i. When get_auto_rsp is set to ESP_BLE_MESH_SERVER_AUTO_RSP, no event will be callback to the application layer when Generic Get messages are received.
ii. When set_auto_rsp is set to ESP_BLE_MESH_SERVER_AUTO_RSP, this event will be callback to the application layer when Generic Set/Set Unack messages are received.

enumerator **ESP_BLE_MESH_GENERIC_SERVER_RECV_GET_MSG_EVT**

When get_auto_rsp is set to ESP_BLE_MESH_SERVER_RSP_BY_APP, this event will be callback to the application layer when Generic Get messages are received.

enumerator **ESP_BLE_MESH_GENERIC_SERVER_RECV_SET_MSG_EVT**

When set_auto_rsp is set to ESP_BLE_MESH_SERVER_RSP_BY_APP, this event will be callback to the application layer when Generic Set/Set Unack messages are received.

enumerator **ESP_BLE_MESH_GENERIC_SERVER_EVT_MAX**

Sensor Client/Server Models

Header File

- components/bt/esp_ble_mesh/api/models/include/esp_ble_mesh_sensor_model_api.h

Functions

esp_err_t **esp_ble_mesh_register_sensor_client_callback**(*esp_ble_mesh_sensor_client_cb_t* callback)

Register BLE Mesh Sensor Client Model callback.

Parameters **callback** – **[in]** Pointer to the callback function.
Returns ESP_OK on success or error code otherwise.

esp_err_t **esp_ble_mesh_sensor_client_get_state**(*esp_ble_mesh_client_common_param_t* *params, *esp_ble_mesh_sensor_client_get_state_t* *get_state)

Get the value of Sensor Server Model states using the Sensor Client Model get messages.

Note: If you want to know the opcodes and corresponding meanings accepted by this API, please refer to esp_ble_mesh_sensor_message_opcode_t in esp_ble_mesh_defs.h

---

Parameters
- **params** –**[in]** Pointer to BLE Mesh common client parameters.
- **get_state** –**[in]** Pointer to sensor get message value. Shall not be set to NULL.

Returns ESP_OK on success or error code otherwise.

esp_err_t **esp_ble_mesh_sensor_client_set_state**(*esp_ble_mesh_client_common_param_t* *params, *esp_ble_mesh_sensor_client_set_state_t* *set_state)

Set the value of Sensor Server Model states using the Sensor Client Model set messages.

Note: If you want to know the opcodes and corresponding meanings accepted by this API, please refer to esp_ble_mesh_sensor_message_opcode_t in esp_ble_mesh_defs.h

---

Parameters
- **params** –**[in]** Pointer to BLE Mesh common client parameters.
- **set_state** –**[in]** Pointer to sensor set message value. Shall not be set to NULL.

Returns ESP_OK on success or error code otherwise.

esp_err_t **esp_ble_mesh_register_sensor_server_callback**(*esp_ble_mesh_sensor_server_cb_t* callback)

Register BLE Mesh Sensor Server Model callback.

Parameters **callback** –**[in]** Pointer to the callback function.

Returns ESP_OK on success or error code otherwise.

Unions

union **esp_ble_mesh_sensor_client_get_state_t**

#include <esp_ble_mesh_sensor_model_api.h> Sensor Client Model get message union.

Public Members

esp_ble_mesh_sensor_descriptor_get_t **descriptor_get**

For ESP_BLE_MESH_MODEL_OP_SENSOR_DESCRIPTOR_GET

esp_ble_mesh_sensor_cadence_get_t **cadence_get**

For ESP_BLE_MESH_MODEL_OP_SENSOR_CADENCE_GET

esp_ble_mesh_sensor_settings_get_t **settings_get**

For ESP_BLE_MESH_MODEL_OP_SENSOR_SETTINGS_GET

esp_ble_mesh_sensor_setting_get_t **setting_get**

For ESP_BLE_MESH_MODEL_OP_SENSOR_SETTING_GET

esp_ble_mesh_sensor_get_t **sensor_get**

For ESP_BLE_MESH_MODEL_OP_SENSOR_GET

esp_ble_mesh_sensor_column_get_t **column_get**

For ESP_BLE_MESH_MODEL_OP_SENSOR_COLUMN_GET

esp_ble_mesh_sensor_series_get_t **series_get**

For ESP_BLE_MESH_MODEL_OP_SENSOR_SERIES_GET

union **esp_ble_mesh_sensor_client_set_state_t**

#include <esp_ble_mesh_sensor_model_api.h> Sensor Client Model set message union.

Public Members

esp_ble_mesh_sensor_cadence_set_t **cadence_set**

For ESP_BLE_MESH_MODEL_OP_SENSOR_CADENCE_SET & ESP_BLE_MESH_MODEL_OP_SENSOR_CADENCE_SET_UNACK

esp_ble_mesh_sensor_setting_set_t **setting_set**

For ESP_BLE_MESH_MODEL_OP_SENSOR_SETTING_SET & ESP_BLE_MESH_MODEL_OP_SENSOR_SETTING_SET_UNACK

union **esp_ble_mesh_sensor_client_status_cb_t**

#include <esp_ble_mesh_sensor_model_api.h> Sensor Client Model received message union.

Public Members

esp_ble_mesh_sensor_descriptor_status_cb_t **descriptor_status**

For ESP_BLE_MESH_MODEL_OP_SENSOR_DESCRIPTOR_STATUS

esp_ble_mesh_sensor_cadence_status_cb_t **cadence_status**

For ESP_BLE_MESH_MODEL_OP_SENSOR_CADENCE_STATUS

esp_ble_mesh_sensor_settings_status_cb_t **settings_status**

For ESP_BLE_MESH_MODEL_OP_SENSOR_SETTINGS_STATUS

esp_ble_mesh_sensor_setting_status_cb_t **setting_status**

For ESP_BLE_MESH_MODEL_OP_SENSOR_SETTING_STATUS

esp_ble_mesh_sensor_status_cb_t **sensor_status**

For ESP_BLE_MESH_MODEL_OP_SENSOR_STATUS

esp_ble_mesh_sensor_column_status_cb_t **column_status**

For ESP_BLE_MESH_MODEL_OP_SENSOR_COLUMN_STATUS

esp_ble_mesh_sensor_series_status_cb_t **series_status**

For ESP_BLE_MESH_MODEL_OP_SENSOR_SERIES_STATUS

union **esp_ble_mesh_sensor_server_state_change_t**

#include <esp_ble_mesh_sensor_model_api.h> Sensor Server Model state change value union.

Public Members

esp_ble_mesh_state_change_sensor_cadence_set_t **sensor_cadence_set**

The recv_op in ctx can be used to decide which state is changed.Sensor Cadence Set

esp_ble_mesh_state_change_sensor_setting_set_t **sensor_setting_set**

Sensor Setting Set

union **esp_ble_mesh_sensor_server_recv_get_msg_t**

#include <esp_ble_mesh_sensor_model_api.h> Sensor Server Model received get message union.

Public Members

esp_ble_mesh_server_recv_sensor_descriptor_get_t **sensor_descriptor**

Sensor Descriptor Get

esp_ble_mesh_server_recv_sensor_cadence_get_t **sensor_cadence**

Sensor Cadence Get

esp_ble_mesh_server_recv_sensor_settings_get_t **sensor_settings**

Sensor Settings Get

esp_ble_mesh_server_recv_sensor_setting_get_t **sensor_setting**

Sensor Setting Get

esp_ble_mesh_server_recv_sensor_get_t **sensor_data**

Sensor Get

esp_ble_mesh_server_recv_sensor_column_get_t **sensor_column**

Sensor Column Get

esp_ble_mesh_server_recv_sensor_series_get_t **sensor_series**

Sensor Series Get

union **esp_ble_mesh_sensor_server_recv_set_msg_t**

#include <esp_ble_mesh_sensor_model_api.h> Sensor Server Model received set message union.

Public Members

esp_ble_mesh_server_recv_sensor_cadence_set_t **sensor_cadence**

Sensor Cadence Set

esp_ble_mesh_server_recv_sensor_setting_set_t **sensor_setting**

Sensor Setting Set

union **esp_ble_mesh_sensor_server_cb_value_t**

#include <esp_ble_mesh_sensor_model_api.h> Sensor Server Model callback value union.

Public Members

esp_ble_mesh_sensor_server_state_change_t **state_change**

ESP_BLE_MESH_SENSOR_SERVER_STATE_CHANGE_EVT

esp_ble_mesh_sensor_server_recv_get_msg_t **get**

ESP_BLE_MESH_SENSOR_SERVER_RECV_GET_MSG_EVT

esp_ble_mesh_sensor_server_recv_set_msg_t **set**

ESP_BLE_MESH_SENSOR_SERVER_RECV_SET_MSG_EVT

Structures

struct **esp_ble_mesh_sensor_descriptor_get_t**

Bluetooth Mesh Sensor Client Model Get and Set parameters structure.

Parameters of Sensor Descriptor Get

Public Members

bool **op_en**

Indicate if optional parameters are included

uint16_t **property_id**

Property ID of a sensor (optional)

struct **esp_ble_mesh_sensor_cadence_get_t**

Parameter of Sensor Cadence Get

Public Members

uint16_t **property_id**

Property ID of a sensor

struct **esp_ble_mesh_sensor_cadence_set_t**

Parameters of Sensor Cadence Set

Public Members

uint16_t **property_id**

Property ID for the sensor

uint8_t **fast_cadence_period_divisor**

Divisor for the publish period

uint8_t **status_trigger_type**

The unit and format of the Status Trigger Delta fields

struct net_buf_simple ***status_trigger_delta_down**

Delta down value that triggers a status message

struct net_buf_simple ***status_trigger_delta_up**

Delta up value that triggers a status message

uint8_t **status_min_interval**

Minimum interval between two consecutive Status messages

struct net_buf_simple ***fast_cadence_low**

Low value for the fast cadence range

struct net_buf_simple ***fast_cadence_high**

Fast value for the fast cadence range

struct **esp_ble_mesh_sensor_settings_get_t**

Parameter of Sensor Settings Get

Public Members

uint16_t **sensor_property_id**

Property ID of a sensor

struct **esp_ble_mesh_sensor_setting_get_t**

Parameters of Sensor Setting Get

Public Members

uint16_t **sensor_property_id**

Property ID of a sensor

uint16_t **sensor_setting_property_id**

Setting ID identifying a setting within a sensor

struct **esp_ble_mesh_sensor_setting_set_t**

Parameters of Sensor Setting Set

Public Members

uint16_t **sensor_property_id**

Property ID identifying a sensor

uint16_t **sensor_setting_property_id**

Setting ID identifying a setting within a sensor

struct net_buf_simple ***sensor_setting_raw**

Raw value for the setting

struct **esp_ble_mesh_sensor_get_t**

Parameters of Sensor Get

Public Members

bool **op_en**

Indicate if optional parameters are included

uint16_t **property_id**

Property ID for the sensor (optional)

struct **esp_ble_mesh_sensor_column_get_t**

Parameters of Sensor Column Get

Public Members

uint16_t **property_id**

Property identifying a sensor

struct net_buf_simple ***raw_value_x**

Raw value identifying a column

struct **esp_ble_mesh_sensor_series_get_t**

Parameters of Sensor Series Get

Public Members

bool **op_en**

Indicate if optional parameters are included

uint16_t **property_id**

Property identifying a sensor

struct net_buf_simple ***raw_value_x1**

Raw value identifying a starting column (optional)

struct net_buf_simple ***raw_value_x2**

Raw value identifying an ending column (C.1)

struct **esp_ble_mesh_sensor_descriptor_status_cb_t**

Bluetooth Mesh Sensor Client Model Get and Set callback parameters structure.

Parameter of Sensor Descriptor Status

Public Members

struct net_buf_simple ***descriptor**

Sequence of 8-octet sensor descriptors (optional)

struct **esp_ble_mesh_sensor_cadence_status_cb_t**

Parameters of Sensor Cadence Status

Public Members

uint16_t **property_id**

Property for the sensor

struct net_buf_simple ***sensor_cadence_value**

Value of sensor cadence state

struct **esp_ble_mesh_sensor_settings_status_cb_t**

Parameters of Sensor Settings Status

Public Members

uint16_t **sensor_property_id**

Property ID identifying a sensor

struct net_buf_simple ***sensor_setting_property_ids**

A sequence of N sensor setting property IDs (optional)

struct **esp_ble_mesh_sensor_setting_status_cb_t**

Parameters of Sensor Setting Status

Public Members

bool **op_en**

Indicate id optional parameters are included

uint16_t **sensor_property_id**

Property ID identifying a sensor

uint16_t **sensor_setting_property_id**

Setting ID identifying a setting within a sensor

uint8_t **sensor_setting_access**

Read/Write access rights for the setting (optional)

struct net_buf_simple ***sensor_setting_raw**

Raw value for the setting

struct **esp_ble_mesh_sensor_status_cb_t**

Parameter of Sensor Status

Public Members

struct net_buf_simple ***marshalled_sensor_data**

Value of sensor data state (optional)

struct **esp_ble_mesh_sensor_column_status_cb_t**

Parameters of Sensor Column Status

Public Members

uint16_t **property_id**

Property identifying a sensor and the Y axis

struct net_buf_simple ***sensor_column_value**

Left values of sensor column status

struct **esp_ble_mesh_sensor_series_status_cb_t**

Parameters of Sensor Series Status

Public Members

uint16_t **property_id**

Property identifying a sensor and the Y axis

struct net_buf_simple ***sensor_series_value**

Left values of sensor series status

struct **esp_ble_mesh_sensor_client_cb_param_t**

Sensor Client Model callback parameters

Public Members

int **error_code**

0: success, otherwise failure. For the error code values please refer to errno.h file. A negative sign is added to the standard error codes in errno.h.

esp_ble_mesh_client_common_param_t ***params**

The client common parameters.

esp_ble_mesh_sensor_client_status_cb_t **status_cb**

The sensor status message callback values

struct **esp_ble_mesh_sensor_descriptor_t**

Parameters of Sensor Descriptor state

Public Members

uint32_t **positive_tolerance**

The value of Sensor Positive Tolerance field

uint32_t **negative_tolerance**

The value of Sensor Negative Tolerance field

uint32_t **sampling_function**

The value of Sensor Sampling Function field

uint8_t **measure_period**

The value of Sensor Measurement Period field

uint8_t **update_interval**

The value of Sensor Update Interval field

struct **esp_ble_mesh_sensor_setting_t**

Parameters of Sensor Setting state

Public Members

uint16_t **property_id**

The value of Sensor Setting Property ID field

uint8_t **access**

The value of Sensor Setting Access field

struct net_buf_simple ***raw**

The value of Sensor Setting Raw field

struct **esp_ble_mesh_sensor_cadence_t**

Parameters of Sensor Cadence state

Public Members

uint8_t **period_divisor**

The value of Fast Cadence Period Divisor field

uint8_t **trigger_type**

The value of Status Trigger Type field

struct net_buf_simple ***trigger_delta_down**

Note: The parameter "size" in trigger_delta_down, trigger_delta_up, fast_cadence_low & fast_cadence_high indicates the exact length of these four parameters, and they are associated with the Sensor Property ID. Users need to initialize the "size" precisely.The value of Status Trigger Delta Down field

struct net_buf_simple ***trigger_delta_up**

The value of Status Trigger Delta Up field

uint8_t **min_interval**

The value of Status Min Interval field

struct net_buf_simple ***fast_cadence_low**

The value of Fast Cadence Low field

struct net_buf_simple ***fast_cadence_high**

The value of Fast Cadence High field

struct **esp_ble_mesh_sensor_data_t**

Parameters of Sensor Data state

Public Members

uint8_t **format**

Format A: The Length field is a 1-based uint4 value (valid range 0x0–0xF, representing range of 1 –16). Format B: The Length field is a 1-based uint7 value (valid range 0x0–0x7F, representing range of 1 – 127). The value 0x7F represents a length of zero.The value of the Sensor Data format

uint8_t **length**

The value of the Sensor Data length

struct net_buf_simple ***raw_value**

The value of Sensor Data raw value

struct **esp_ble_mesh_sensor_series_column_t**

Parameters of Sensor Series Column state

Public Members

struct net_buf_simple ***raw_value_x**

The value of Sensor Raw Value X field

struct net_buf_simple ***column_width**

The value of Sensor Column Width field

struct net_buf_simple ***raw_value_y**

The value of Sensor Raw Value Y field

struct **esp_ble_mesh_sensor_state_t**

Parameters of Sensor states

Public Members

uint16_t **sensor_property_id**

The value of Sensor Property ID field

esp_ble_mesh_sensor_descriptor_t **descriptor**

Parameters of the Sensor Descriptor state

const uint8_t **setting_count**

Multiple Sensor Setting states may be present for each sensor. The Sensor Setting Property ID values shall be unique for each Sensor Property ID that identifies a sensor within an element.

esp_ble_mesh_sensor_setting_t ***settings**

Parameters of the Sensor Setting state

esp_ble_mesh_sensor_cadence_t ***cadence**

The Sensor Cadence state may be not supported by sensors based on device properties referencing "non-scalar characteristics" such as "histograms" or "composite characteristics" .Parameters of the Sensor Cadence state

esp_ble_mesh_sensor_data_t **sensor_data**

Parameters of the Sensor Data state

esp_ble_mesh_sensor_series_column_t **series_column**

Parameters of the Sensor Series Column state

struct **esp_ble_mesh_sensor_srv_t**

User data of Sensor Server Model

Public Members

esp_ble_mesh_model_t ***model**

Pointer to the Sensor Server Model. Initialized internally.

esp_ble_mesh_server_rsp_ctrl_t **rsp_ctrl**

Response control of the server model received messages

const uint8_t **state_count**

Sensor state count

esp_ble_mesh_sensor_state_t ***states**

Parameters of the Sensor states

struct **esp_ble_mesh_sensor_setup_srv_t**

User data of Sensor Setup Server Model

Public Members

esp_ble_mesh_model_t ***model**

Pointer to the Sensor Setup Server Model. Initialized internally.

esp_ble_mesh_server_rsp_ctrl_t **rsp_ctrl**

Response control of the server model received messages

const uint8_t **state_count**

Sensor state count

esp_ble_mesh_sensor_state_t ***states**

Parameters of the Sensor states

struct **esp_ble_mesh_state_change_sensor_cadence_set_t**

Parameters of Sensor Cadence Set state change event

Public Members

uint16_t **property_id**

The value of Sensor Property ID state

uint8_t **period_divisor**

The value of Fast Cadence Period Divisor state

uint8_t **trigger_type**

The value of Status Trigger Type state

struct net_buf_simple ***trigger_delta_down**

The value of Status Trigger Delta Down state

struct net_buf_simple ***trigger_delta_up**

The value of Status Trigger Delta Up state

uint8_t **min_interval**

The value of Status Min Interval state

struct net_buf_simple ***fast_cadence_low**

The value of Fast Cadence Low state

struct net_buf_simple ***fast_cadence_high**

The value of Fast Cadence High state

struct **esp_ble_mesh_state_change_sensor_setting_set_t**

Parameters of Sensor Setting Set state change event

Public Members

uint16_t **property_id**

The value of Sensor Property ID state

uint16_t **setting_property_id**

The value of Sensor Setting Property ID state

struct net_buf_simple ***setting_value**

The value of Sensor Property Value state

struct **esp_ble_mesh_server_recv_sensor_descriptor_get_t**

Context of the received Sensor Descriptor Get message

Public Members

bool **op_en**

Indicate if optional parameters are included

uint16_t **property_id**

Property ID of a sensor (optional)

struct **esp_ble_mesh_server_recv_sensor_cadence_get_t**

Context of the received Sensor Cadence Get message

Public Members

uint16_t **property_id**

Property ID of a sensor

struct **esp_ble_mesh_server_recv_sensor_settings_get_t**

Context of the received Sensor Settings Get message

Public Members

uint16_t **property_id**

Property ID of a sensor

struct **esp_ble_mesh_server_recv_sensor_setting_get_t**

Context of the received Sensor Setting Get message

Public Members

uint16_t **property_id**

Property ID of a sensor

uint16_t **setting_property_id**

Setting ID identifying a setting within a sensor

struct **esp_ble_mesh_server_recv_sensor_get_t**

Context of the received Sensor Get message

Public Members

bool **op_en**

Indicate if optional parameters are included

uint16_t **property_id**

Property ID for the sensor (optional)

struct **esp_ble_mesh_server_recv_sensor_column_get_t**

Context of the received Sensor Column Get message

Public Members

uint16_t **property_id**

Property identifying a sensor

struct net_buf_simple ***raw_value_x**

Raw value identifying a column

struct **esp_ble_mesh_server_recv_sensor_series_get_t**

Context of the received Sensor Series Get message

Public Members

bool **op_en**

Indicate if optional parameters are included

uint16_t **property_id**

Property identifying a sensor

struct net_buf_simple ***raw_value**

Raw value containing X1 and X2 (optional)

struct **esp_ble_mesh_server_recv_sensor_cadence_set_t**

Context of the received Sensor Cadence Set message

Public Members

uint16_t **property_id**

Property ID for the sensor

struct net_buf_simple ***cadence**

Value of Sensor Cadence state

struct **esp_ble_mesh_server_recv_sensor_setting_set_t**

Context of the received Sensor Setting Set message

Public Members

uint16_t **property_id**

Property ID identifying a sensor

uint16_t **setting_property_id**

Setting ID identifying a setting within a sensor

struct net_buf_simple ***setting_raw**

Raw value for the setting

struct **esp_ble_mesh_sensor_server_cb_param_t**

Sensor Server Model callback parameters

Public Members

esp_ble_mesh_model_t ***model**

Pointer to Sensor Server Models

esp_ble_mesh_msg_ctx_t **ctx**

Context of the received messages

esp_ble_mesh_sensor_server_cb_value_t **value**

Value of the received Sensor Messages

Macros

ESP_BLE_MESH_MODEL_SENSOR_CLI(cli_pub, cli_data)

Define a new Sensor Client Model.

Note: This API needs to be called for each element on which the application needs to have a Sensor Client Model.

Parameters
- **cli_pub** –Pointer to the unique struct *esp_ble_mesh_model_pub_t*.
- **cli_data** –Pointer to the unique struct *esp_ble_mesh_client_t*.

Returns New Sensor Client Model instance.

ESP_BLE_MESH_MODEL_SENSOR_SRV(srv_pub, srv_data)

Sensor Server Models related context.

Define a new Sensor Server Model.

Note: 1. The Sensor Server model is a root model. When this model is present on an element, the corresponding Sensor Setup Server model shall also be present.

a. This model shall support model publication and model subscription.

Parameters
- **srv_pub** –Pointer to the unique struct *esp_ble_mesh_model_pub_t*.
- **srv_data** –Pointer to the unique struct *esp_ble_mesh_sensor_srv_t*.

Returns New Sensor Server Model instance.

ESP_BLE_MESH_MODEL_SENSOR_SETUP_SRV(srv_pub, srv_data)

Define a new Sensor Setup Server Model.

Note: 1. The Sensor Setup Server model extends the Sensor Server model.

a. This model shall support model publication and model subscription.

Parameters
- **srv_pub** –Pointer to the unique struct *esp_ble_mesh_model_pub_t*.
- **srv_data** –Pointer to the unique struct *esp_ble_mesh_sensor_setup_srv_t*.

Returns New Sensor Setup Server Model instance.

ESP_BLE_MESH_INVALID_SENSOR_PROPERTY_ID

Invalid Sensor Property ID

ESP_BLE_MESH_SENSOR_PROPERTY_ID_LEN

Length of Sensor Property ID

ESP_BLE_MESH_SENSOR_DESCRIPTOR_LEN

Length of Sensor Descriptor state

ESP_BLE_MESH_SENSOR_UNSPECIFIED_POS_TOLERANCE

Unspecified Sensor Positive Tolerance

ESP_BLE_MESH_SENSOR_UNSPECIFIED_NEG_TOLERANCE

Unspecified Sensor Negative Tolerance

ESP_BLE_MESH_SENSOR_NOT_APPL_MEASURE_PERIOD

Not applicable Sensor Measurement Period

ESP_BLE_MESH_SENSOR_NOT_APPL_UPDATE_INTERVAL

Not applicable Sensor Update Interval

ESP_BLE_MESH_INVALID_SENSOR_SETTING_PROPERTY_ID

Invalid Sensor Setting Property ID

ESP_BLE_MESH_SENSOR_SETTING_PROPERTY_ID_LEN

Length of Sensor Setting Property ID

ESP_BLE_MESH_SENSOR_SETTING_ACCESS_LEN

Length of Sensor Setting Access

ESP_BLE_MESH_SENSOR_SETTING_ACCESS_READ

Sensor Setting Access - Read

ESP_BLE_MESH_SENSOR_SETTING_ACCESS_READ_WRITE

Sensor Setting Access - Read & Write

ESP_BLE_MESH_SENSOR_DIVISOR_TRIGGER_TYPE_LEN

Length of Sensor Divisor Trigger Type

ESP_BLE_MESH_SENSOR_STATUS_MIN_INTERVAL_LEN

Length of Sensor Status Min Interval

ESP_BLE_MESH_SENSOR_PERIOD_DIVISOR_MAX_VALUE

Maximum value of Sensor Period Divisor

ESP_BLE_MESH_SENSOR_STATUS_MIN_INTERVAL_MAX

Maximum value of Sensor Status Min Interval

ESP_BLE_MESH_SENSOR_STATUS_TRIGGER_TYPE_CHAR

Sensor Status Trigger Type - Format Type of the characteristic that the Sensor Property ID state references

ESP_BLE_MESH_SENSOR_STATUS_TRIGGER_TYPE_UINT16

Sensor Status Trigger Type - Format Type "uint16"

ESP_BLE_MESH_SENSOR_DATA_FORMAT_A

Sensor Data Format A

ESP_BLE_MESH_SENSOR_DATA_FORMAT_B

Sensor Data Format B

ESP_BLE_MESH_SENSOR_DATA_FORMAT_A_MPID_LEN

MPID length of Sensor Data Format A

ESP_BLE_MESH_SENSOR_DATA_FORMAT_B_MPID_LEN

MPID length of Sensor Data Format B

ESP_BLE_MESH_SENSOR_DATA_ZERO_LEN

Zero length of Sensor Data.

Note: The Length field is a 1-based uint7 value (valid range 0x0–0x7F, representing range of 1–127). The value 0x7F represents a length of zero.

ESP_BLE_MESH_GET_SENSOR_DATA_FORMAT (_data)

Get format of the sensor data.

Note: Multiple sensor data may be concatenated. Make sure the _data pointer is updated before getting the format of the corresponding sensor data.

Parameters

- **_data** –Pointer to the start of the sensor data.

Returns Format of the sensor data.

ESP_BLE_MESH_GET_SENSOR_DATA_LENGTH (_data, _fmt)

Get length of the sensor data.

Note: Multiple sensor data may be concatenated. Make sure the _data pointer is updated before getting the length of the corresponding sensor data.

Parameters

- **_data** –Pointer to the start of the sensor data.
- **_fmt** –Format of the sensor data.

Returns Length (zero-based) of the sensor data.

ESP_BLE_MESH_GET_SENSOR_DATA_PROPERTY_ID (_data, _fmt)

Get Sensor Property ID of the sensor data.

Note: Multiple sensor data may be concatenated. Make sure the _data pointer is updated before getting Sensor Property ID of the corresponding sensor data.

Parameters

- **_data** –Pointer to the start of the sensor data.
- **_fmt** –Format of the sensor data.

Returns Sensor Property ID of the sensor data.

ESP_BLE_MESH_SENSOR_DATA_FORMAT_A_MPID (_len, _id)

Generate a MPID value for sensor data with Format A.

Note: 1. The Format field is 0b0 and indicates that Format A is used.

a. The Length field is a 1-based uint4 value (valid range 0x0–0xF, representing range of 1–16).
b. The Property ID is an 11-bit bit field representing 11 LSb of a Property ID.
c. This format may be used for Property Values that are not longer than 16 octets and for Property IDs less than 0x0800.

Parameters

- **_len** –Length of Sensor Raw value.
- **_id** –Sensor Property ID.

Returns 2-octet MPID value for sensor data with Format A.

ESP_BLE_MESH_SENSOR_DATA_FORMAT_B_MPID (_len, _id)

Generate a MPID value for sensor data with Format B.

Note: 1. The Format field is 0b1 and indicates Format B is used.

a. The Length field is a 1-based uint7 value (valid range 0x0–0x7F, representing range of 1–127). The value 0x7F represents a length of zero.
b. The Property ID is a 16-bit bit field representing a Property ID.
c. This format may be used for Property Values not longer than 128 octets and for any Property IDs. Property values longer than 128 octets are not supported by the Sensor Status message.
d. Exclude the generated 1-octet value, the 2-octet Sensor Property ID

Parameters
- **_len** –Length of Sensor Raw value.
- **_id** –Sensor Property ID.

Returns 3-octet MPID value for sensor data with Format B.

Type Definitions

typedef void (***esp_ble_mesh_sensor_client_cb_t**)(*esp_ble_mesh_sensor_client_cb_event_t* event, *esp_ble_mesh_sensor_client_cb_param_t* *param)

Bluetooth Mesh Sensor Client Model function.

Sensor Client Model callback function type

Param event Event type
Param param Pointer to callback parameter

typedef void (***esp_ble_mesh_sensor_server_cb_t**)(*esp_ble_mesh_sensor_server_cb_event_t* event, *esp_ble_mesh_sensor_server_cb_param_t* *param)

Bluetooth Mesh Sensor Server Model function.

Sensor Server Model callback function type

Param event Event type
Param param Pointer to callback parameter

Enumerations

enum **esp_ble_mesh_sensor_client_cb_event_t**

This enum value is the event of Sensor Client Model

Values:

enumerator **ESP_BLE_MESH_SENSOR_CLIENT_GET_STATE_EVT**

enumerator **ESP_BLE_MESH_SENSOR_CLIENT_SET_STATE_EVT**

enumerator **ESP_BLE_MESH_SENSOR_CLIENT_PUBLISH_EVT**

enumerator **ESP_BLE_MESH_SENSOR_CLIENT_TIMEOUT_EVT**

enumerator **ESP_BLE_MESH_SENSOR_CLIENT_EVT_MAX**

enum **esp_ble_mesh_sensor_sample_func**

This enum value is value of Sensor Sampling Function

Values:

enumerator **ESP_BLE_MESH_SAMPLE_FUNC_UNSPECIFIED**

enumerator **ESP_BLE_MESH_SAMPLE_FUNC_INSTANTANEOUS**

enumerator **ESP_BLE_MESH_SAMPLE_FUNC_ARITHMETIC_MEAN**

enumerator **ESP_BLE_MESH_SAMPLE_FUNC_RMS**

enumerator **ESP_BLE_MESH_SAMPLE_FUNC_MAXIMUM**

enumerator **ESP_BLE_MESH_SAMPLE_FUNC_MINIMUM**

enumerator **ESP_BLE_MESH_SAMPLE_FUNC_ACCUMULATED**

enumerator **ESP_BLE_MESH_SAMPLE_FUNC_COUNT**

enum **esp_ble_mesh_sensor_server_cb_event_t**

This enum value is the event of Sensor Server Model

Values:

enumerator **ESP_BLE_MESH_SENSOR_SERVER_STATE_CHANGE_EVT**

i. When get_auto_rsp is set to ESP_BLE_MESH_SERVER_AUTO_RSP, no event will be callback to the application layer when Sensor Get messages are received.
ii. When set_auto_rsp is set to ESP_BLE_MESH_SERVER_AUTO_RSP, this event will be callback to the application layer when Sensor Set/Set Unack messages are received.

enumerator **ESP_BLE_MESH_SENSOR_SERVER_RECV_GET_MSG_EVT**

When get_auto_rsp is set to ESP_BLE_MESH_SERVER_RSP_BY_APP, this event will be callback to the application layer when Sensor Get messages are received.

enumerator **ESP_BLE_MESH_SENSOR_SERVER_RECV_SET_MSG_EVT**

When set_auto_rsp is set to ESP_BLE_MESH_SERVER_RSP_BY_APP, this event will be callback to the application layer when Sensor Set/Set Unack messages are received.

enumerator **ESP_BLE_MESH_SENSOR_SERVER_EVT_MAX**

Time and Scenes Client/Server Models

Header File

- components/bt/esp_ble_mesh/api/models/include/esp_ble_mesh_time_scene_model_api.h

Functions

esp_err_t **esp_ble_mesh_register_time_scene_client_callback**(*esp_ble_mesh_time_scene_client_cb_t* callback)

Register BLE Mesh Time Scene Client Model callback.

Parameters **callback** –**[in]** Pointer to the callback function.
Returns ESP_OK on success or error code otherwise.

esp_err_t **esp_ble_mesh_time_scene_client_get_state**(*esp_ble_mesh_client_common_param_t* *params, *esp_ble_mesh_time_scene_client_get_state_t* *get_state)

Get the value of Time Scene Server Model states using the Time Scene Client Model get messages.

Note: If you want to know the opcodes and corresponding meanings accepted by this API, please refer to esp_ble_mesh_time_scene_message_opcode_t in esp_ble_mesh_defs.h

---

Parameters

- **params** –**[in]** Pointer to BLE Mesh common client parameters.
- **get_state** –**[in]** Pointer to time scene get message value. Shall not be set to NULL.

Returns ESP_OK on success or error code otherwise.

esp_err_t **esp_ble_mesh_time_scene_client_set_state**(*esp_ble_mesh_client_common_param_t* *params, *esp_ble_mesh_time_scene_client_set_state_t* *set_state)

Set the value of Time Scene Server Model states using the Time Scene Client Model set messages.

Note: If you want to know the opcodes and corresponding meanings accepted by this API, please refer to esp_ble_mesh_time_scene_message_opcode_t in esp_ble_mesh_defs.h

---

Parameters

- **params** –**[in]** Pointer to BLE Mesh common client parameters.
- **set_state** –**[in]** Pointer to time scene set message value. Shall not be set to NULL.

Returns ESP_OK on success or error code otherwise.

esp_err_t **esp_ble_mesh_register_time_scene_server_callback**(*esp_ble_mesh_time_scene_server_cb_t* callback)

Register BLE Mesh Time and Scenes Server Model callback.

Parameters **callback** –**[in]** Pointer to the callback function.

Returns ESP_OK on success or error code otherwise.

Unions

union **esp_ble_mesh_time_scene_client_get_state_t**

#include <esp_ble_mesh_time_scene_model_api.h> Time Scene Client Model get message union.

Public Members

esp_ble_mesh_scheduler_act_get_t **scheduler_act_get**

For ESP_BLE_MESH_MODEL_OP_SCHEDULER_ACT_GET

union **esp_ble_mesh_time_scene_client_set_state_t**

#include <esp_ble_mesh_time_scene_model_api.h> Time Scene Client Model set message union.

Public Members

esp_ble_mesh_time_set_t **time_set**

For ESP_BLE_MESH_MODEL_OP_TIME_SET

esp_ble_mesh_time_zone_set_t **time_zone_set**

For ESP_BLE_MESH_MODEL_OP_TIME_ZONE_SET

esp_ble_mesh_tai_utc_delta_set_t **tai_utc_delta_set**

For ESP_BLE_MESH_MODEL_OP_TAI_UTC_DELTA_SET

esp_ble_mesh_time_role_set_t **time_role_set**

For ESP_BLE_MESH_MODEL_OP_TIME_ROLE_SET

esp_ble_mesh_scene_store_t **scene_store**

For ESP_BLE_MESH_MODEL_OP_SCENE_STORE & ESP_BLE_MESH_MODEL_OP_SCENE_STORE_UNACK

esp_ble_mesh_scene_recall_t **scene_recall**

For ESP_BLE_MESH_MODEL_OP_SCENE_RECALL & ESP_BLE_MESH_MODEL_OP_SCENE_RECALL_UNA

esp_ble_mesh_scene_delete_t **scene_delete**

For ESP_BLE_MESH_MODEL_OP_SCENE_DELETE & ESP_BLE_MESH_MODEL_OP_SCENE_DELETE_UNAC

esp_ble_mesh_scheduler_act_set_t **scheduler_act_set**

For ESP_BLE_MESH_MODEL_OP_SCHEDULER_ACT_SET & ESP_BLE_MESH_MODEL_OP_SCHEDULER_ACT_SET_UNACK

union **esp_ble_mesh_time_scene_client_status_cb_t**

#include <esp_ble_mesh_time_scene_model_api.h> Time Scene Client Model received message union.

Public Members

esp_ble_mesh_time_status_cb_t **time_status**

For ESP_BLE_MESH_MODEL_OP_TIME_STATUS

esp_ble_mesh_time_zone_status_cb_t **time_zone_status**

For ESP_BLE_MESH_MODEL_OP_TIME_ZONE_STATUS

esp_ble_mesh_tai_utc_delta_status_cb_t **tai_utc_delta_status**

For ESP_BLE_MESH_MODEL_OP_TAI_UTC_DELTA_STATUS

esp_ble_mesh_time_role_status_cb_t **time_role_status**

For ESP_BLE_MESH_MODEL_OP_TIME_ROLE_STATUS

esp_ble_mesh_scene_status_cb_t **scene_status**

For ESP_BLE_MESH_MODEL_OP_SCENE_STATUS

esp_ble_mesh_scene_register_status_cb_t **scene_register_status**

For ESP_BLE_MESH_MODEL_OP_SCENE_REGISTER_STATUS

esp_ble_mesh_scheduler_status_cb_t **scheduler_status**

For ESP_BLE_MESH_MODEL_OP_SCHEDULER_STATUS

esp_ble_mesh_scheduler_act_status_cb_t **scheduler_act_status**

For ESP_BLE_MESH_MODEL_OP_SCHEDULER_ACT_STATUS

union **esp_ble_mesh_time_scene_server_state_change_t**

#include <esp_ble_mesh_time_scene_model_api.h> Time Scene Server Model state change value union.

Public Members

esp_ble_mesh_state_change_time_set_t **time_set**

The recv_op in ctx can be used to decide which state is changed.Time Set

esp_ble_mesh_state_change_time_status_t **time_status**

Time Status

esp_ble_mesh_state_change_time_zone_set_t **time_zone_set**

Time Zone Set

esp_ble_mesh_state_change_tai_utc_delta_set_t **tai_utc_delta_set**

TAI UTC Delta Set

esp_ble_mesh_state_change_time_role_set_t **time_role_set**

Time Role Set

esp_ble_mesh_state_change_scene_store_t **scene_store**

Scene Store

esp_ble_mesh_state_change_scene_recall_t **scene_recall**

Scene Recall

esp_ble_mesh_state_change_scene_delete_t **scene_delete**

Scene Delete

esp_ble_mesh_state_change_scheduler_act_set_t **scheduler_act_set**

Scheduler Action Set

union **esp_ble_mesh_time_scene_server_recv_get_msg_t**

#include <esp_ble_mesh_time_scene_model_api.h> Time Scene Server Model received get message union.

Public Members

esp_ble_mesh_server_recv_scheduler_act_get_t **scheduler_act**

Scheduler Action Get

union **esp_ble_mesh_time_scene_server_recv_set_msg_t**

#include <esp_ble_mesh_time_scene_model_api.h> Time Scene Server Model received set message union.

Public Members

esp_ble_mesh_server_recv_time_set_t **time**

Time Set

esp_ble_mesh_server_recv_time_zone_set_t **time_zone**

Time Zone Set

esp_ble_mesh_server_recv_tai_utc_delta_set_t **tai_utc_delta**

TAI-UTC Delta Set

esp_ble_mesh_server_recv_time_role_set_t **time_role**

Time Role Set

esp_ble_mesh_server_recv_scene_store_t **scene_store**

Scene Store/Scene Store Unack

esp_ble_mesh_server_recv_scene_recall_t **scene_recall**

Scene Recall/Scene Recall Unack

esp_ble_mesh_server_recv_scene_delete_t **scene_delete**

Scene Delete/Scene Delete Unack

esp_ble_mesh_server_recv_scheduler_act_set_t **scheduler_act**

Scheduler Action Set/Scheduler Action Set Unack

union **esp_ble_mesh_time_scene_server_recv_status_msg_t**

#include <esp_ble_mesh_time_scene_model_api.h> Time Scene Server Model received status message union.

Public Members

esp_ble_mesh_server_recv_time_status_t **time_status**

Time Status

union **esp_ble_mesh_time_scene_server_cb_value_t**

#include <esp_ble_mesh_time_scene_model_api.h> Time Scene Server Model callback value union.

Public Members

esp_ble_mesh_time_scene_server_state_change_t **state_change**

ESP_BLE_MESH_TIME_SCENE_SERVER_STATE_CHANGE_EVT

esp_ble_mesh_time_scene_server_recv_get_msg_t **get**

ESP_BLE_MESH_TIME_SCENE_SERVER_RECV_GET_MSG_EVT

esp_ble_mesh_time_scene_server_recv_set_msg_t **set**

ESP_BLE_MESH_TIME_SCENE_SERVER_RECV_SET_MSG_EVT

esp_ble_mesh_time_scene_server_recv_status_msg_t **status**

ESP_BLE_MESH_TIME_SCENE_SERVER_RECV_STATUS_MSG_EVT

Structures

struct **esp_ble_mesh_time_set_t**

Bluetooth Mesh Time Scene Client Model Get and Set parameters structure.

Parameters of Time Set

Public Members

uint8_t **tai_seconds**[5]

The current TAI time in seconds

uint8_t **sub_second**

The sub-second time in units of 1/256 second

uint8_t **uncertainty**

The estimated uncertainty in 10-millisecond steps

uint16_t **time_authority**

0 = No Time Authority, 1 = Time Authority

uint16_t **tai_utc_delta**

Current difference between TAI and UTC in seconds

uint8_t **time_zone_offset**

The local time zone offset in 15-minute increments

struct **esp_ble_mesh_time_zone_set_t**

Parameters of Time Zone Set

Public Members

uint8_t **time_zone_offset_new**

Upcoming local time zone offset

uint8_t **tai_zone_change**[5]

TAI Seconds time of the upcoming Time Zone Offset change

struct **esp_ble_mesh_tai_utc_delta_set_t**

Parameters of TAI-UTC Delta Set

Public Members

uint16_t **tai_utc_delta_new**

Upcoming difference between TAI and UTC in seconds

uint16_t **padding**

Always 0b0. Other values are Prohibited.

uint8_t **tai_delta_change**[5]

TAI Seconds time of the upcoming TAI-UTC Delta change

struct **esp_ble_mesh_time_role_set_t**

Parameter of Time Role Set

Public Members

uint8_t **time_role**

The Time Role for the element

struct **esp_ble_mesh_scene_store_t**

Parameter of Scene Store

Public Members

uint16_t **scene_number**

The number of scenes to be stored

struct **esp_ble_mesh_scene_recall_t**

Parameters of Scene Recall

Public Members

bool **op_en**

Indicate if optional parameters are included

uint16_t **scene_number**

The number of scenes to be recalled

uint8_t **tid**

Transaction ID

uint8_t **trans_time**

Time to complete state transition (optional)

uint8_t **delay**

Indicate message execution delay (C.1)

struct **esp_ble_mesh_scene_delete_t**

Parameter of Scene Delete

Public Members

uint16_t **scene_number**

The number of scenes to be deleted

struct **esp_ble_mesh_scheduler_act_get_t**

Parameter of Scheduler Action Get

Public Members

uint8_t **index**

Index of the Schedule Register entry to get

struct **esp_ble_mesh_scheduler_act_set_t**

Parameters of Scheduler Action Set

Public Members

uint64_t **index**

Index of the Schedule Register entry to set

uint64_t **year**

Scheduled year for the action

uint64_t **month**

Scheduled month for the action

uint64_t **day**

Scheduled day of the month for the action

uint64_t **hour**

Scheduled hour for the action

uint64_t **minute**

Scheduled minute for the action

uint64_t **second**

Scheduled second for the action

uint64_t **day_of_week**

Schedule days of the week for the action

uint64_t **action**

Action to be performed at the scheduled time

uint64_t **trans_time**

Transition time for this action

uint16_t **scene_number**

Transition time for this action

struct **esp_ble_mesh_time_status_cb_t**

Bluetooth Mesh Time Scene Client Model Get and Set callback parameters structure.

Parameters of Time Status

Public Members

uint8_t **tai_seconds**[5]

The current TAI time in seconds

uint8_t **sub_second**

The sub-second time in units of 1/256 second

uint8_t **uncertainty**

The estimated uncertainty in 10-millisecond steps

uint16_t **time_authority**

0 = No Time Authority, 1 = Time Authority

uint16_t **tai_utc_delta**

Current difference between TAI and UTC in seconds

uint8_t **time_zone_offset**

The local time zone offset in 15-minute increments

struct **esp_ble_mesh_time_zone_status_cb_t**

Parameters of Time Zone Status

Public Members

uint8_t **time_zone_offset_curr**

Current local time zone offset

uint8_t **time_zone_offset_new**

Upcoming local time zone offset

uint8_t **tai_zone_change**[5]

TAI Seconds time of the upcoming Time Zone Offset change

struct **esp_ble_mesh_tai_utc_delta_status_cb_t**

Parameters of TAI-UTC Delta Status

Public Members

uint16_t **tai_utc_delta_curr**

Current difference between TAI and UTC in seconds

uint16_t **padding_1**

Always 0b0. Other values are Prohibited.

uint16_t **tai_utc_delta_new**

Upcoming difference between TAI and UTC in seconds

uint16_t **padding_2**

Always 0b0. Other values are Prohibited.

uint8_t **tai_delta_change**[5]

TAI Seconds time of the upcoming TAI-UTC Delta change

struct **esp_ble_mesh_time_role_status_cb_t**

Parameter of Time Role Status

Public Members

uint8_t **time_role**

The Time Role for the element

struct **esp_ble_mesh_scene_status_cb_t**

Parameters of Scene Status

Public Members

bool **op_en**

Indicate if optional parameters are included

uint8_t **status_code**

Status code of the last operation

uint16_t **current_scene**

Scene Number of the current scene

uint16_t **target_scene**

Scene Number of the target scene (optional)

uint8_t **remain_time**

Time to complete state transition (C.1)

struct **esp_ble_mesh_scene_register_status_cb_t**

Parameters of Scene Register Status

Public Members

uint8_t **status_code**

Status code for the previous operation

uint16_t **current_scene**

Scene Number of the current scene

struct net_buf_simple ***scenes**

A list of scenes stored within an element

struct **esp_ble_mesh_scheduler_status_cb_t**

Parameter of Scheduler Status

Public Members

uint16_t **schedules**

Bit field indicating defined Actions in the Schedule Register

struct **esp_ble_mesh_scheduler_act_status_cb_t**

Parameters of Scheduler Action Status

Public Members

uint64_t **index**

Enumerates (selects) a Schedule Register entry

uint64_t **year**

Scheduled year for the action

uint64_t **month**

Scheduled month for the action

uint64_t **day**

Scheduled day of the month for the action

uint64_t **hour**

Scheduled hour for the action

uint64_t **minute**

Scheduled minute for the action

uint64_t **second**

Scheduled second for the action

uint64_t **day_of_week**

Schedule days of the week for the action

uint64_t **action**

Action to be performed at the scheduled time

uint64_t **trans_time**

Transition time for this action

uint16_t **scene_number**

Transition time for this action

struct **esp_ble_mesh_time_scene_client_cb_param_t**

Time Scene Client Model callback parameters

Public Members

int **error_code**

Appropriate error code

esp_ble_mesh_client_common_param_t ***params**

The client common parameters.

esp_ble_mesh_time_scene_client_status_cb_t **status_cb**

The scene status message callback values

struct **esp_ble_mesh_time_state_t**

Parameters of Time state

Public Members

uint8_t **tai_seconds**[5]

The value of the TAI Seconds state

uint8_t **subsecond**

The value of the Subsecond field

uint8_t **uncertainty**

The value of the Uncertainty field

uint8_t **time_zone_offset_curr**

The value of the Time Zone Offset Current field

uint8_t **time_zone_offset_new**

The value of the Time Zone Offset New state

uint8_t **tai_zone_change**[5]

The value of the TAI of Zone Chaneg field

uint16_t **time_authority**

The value of the Time Authority bit

uint16_t **tai_utc_delta_curr**

The value of the TAI-UTC Delta Current state

uint16_t **tai_utc_delta_new**

The value of the TAI-UTC Delta New state

uint8_t **tai_delta_change**[5]

The value of the TAI of Delta Change field

struct *esp_ble_mesh_time_state_t*::[anonymous] **time**

Parameters of the Time state

uint8_t **time_role**

The value of the Time Role state

struct **esp_ble_mesh_time_srv_t**

User data of Time Server Model

Public Members

esp_ble_mesh_model_t ***model**

Pointer to the Time Server Model. Initialized internally.

esp_ble_mesh_server_rsp_ctrl_t **rsp_ctrl**

Response control of the server model received messages

esp_ble_mesh_time_state_t ***state**

Parameters of the Time state

struct **esp_ble_mesh_time_setup_srv_t**

User data of Time Setup Server Model

Public Members

esp_ble_mesh_model_t ***model**

Pointer to the Time Setup Server Model. Initialized internally.

esp_ble_mesh_server_rsp_ctrl_t **rsp_ctrl**

Response control of the server model received messages

esp_ble_mesh_time_state_t ***state**

Parameters of the Time state

struct **esp_ble_mesh_scene_register_t**

a. Scene Store is an operation of storing values of a present state of an element.
b. The structure and meaning of the stored state is determined by a model. States to be stored are specified by each model.
c. The Scene Store operation shall persistently store all values of all states marked as Stored with Scene for all models present on all elements of a node.
d. If a model is extending another model, the extending model shall determine the Stored with Scene behavior of that model.Parameters of Scene Register state

Public Members

uint16_t **scene_number**

The value of the Scene Number

uint8_t **scene_type**

The value of the Scene Type

struct net_buf_simple ***scene_value**

Scene value may use a union to represent later, the union contains structures of all the model states which can be stored in a scene.The value of the Scene Value

struct **esp_ble_mesh_scenes_state_t**

Parameters of Scenes state.

Scenes serve as memory banks for storage of states (e.g., a power level or a light level/color). Values of states of an element can be stored as a scene and can be recalled later from the scene memory.

A scene is represented by a Scene Number, which is a 16-bit non-zero, mesh-wide value. (There can be a maximum of 65535 scenes in a mesh network.) The meaning of a scene, as well as the state storage container associated with it, are determined by a model.

The Scenes state change may start numerous parallel model transitions. In that case, each individual model handles the transition internally.

The scene transition is defined as a group of individual model transitions started by a Scene Recall operation. The scene transition is in progress when at least one transition from the group of individual model transitions is in progress.

Public Members

const uint16_t **scene_count**

The Scenes state' s scene count

esp_ble_mesh_scene_register_t ***scenes**

Parameters of the Scenes state

uint16_t **current_scene**

The Current Scene state is a 16-bit value that contains either the Scene Number of the currently active scene or a value of 0x0000 when no scene is active.

When a Scene Store operation or a Scene Recall operation completes with success, the Current Scene state value shall be to the Scene Number used during that operation.

When the Current Scene Number is deleted from a Scene Register state as a result of Scene Delete operation, the Current Scene state shall be set to 0x0000.

When any of the element's state that is marked as "Stored with Scene" has changed not as a result of a Scene Recall operation, the value of the Current Scene state shall be set to 0x0000.

When a scene transition is in progress, the value of the Current Scene state shall be set to 0x0000.The value of the Current Scene state

uint16_t **target_scene**

The Target Scene state is a 16-bit value that contains the target Scene Number when a scene transition is in progress.

When the scene transition is in progress and the target Scene Number is deleted from a Scene Register state as a result of Scene Delete operation, the Target Scene state shall be set to 0x0000.

When the scene transition is in progress and a new Scene Number is stored in the Scene Register as a result of Scene Store operation, the Target Scene state shall be set to the new Scene Number.

When the scene transition is not in progress, the value of the Target Scene state shall be set to 0x0000.The value of the Target Scene state

uint8_t **status_code**

The status code of the last scene operation

bool **in_progress**

Indicate if the scene transition is in progress

struct **esp_ble_mesh_scene_srv_t**

User data of Scene Server Model

Public Members

esp_ble_mesh_model_t ***model**

Pointer to the Scene Server Model. Initialized internally.

esp_ble_mesh_server_rsp_ctrl_t **rsp_ctrl**

Response control of the server model received messages

esp_ble_mesh_scenes_state_t ***state**

Parameters of the Scenes state

esp_ble_mesh_last_msg_info_t **last**

Parameters of the last received set message

esp_ble_mesh_state_transition_t **transition**

Parameters of state transition

struct **esp_ble_mesh_scene_setup_srv_t**

User data of Scene Setup Server Model

Public Members

esp_ble_mesh_model_t ***model**

Pointer to the Scene Setup Server Model. Initialized internally.

esp_ble_mesh_server_rsp_ctrl_t **rsp_ctrl**

Response control of the server model received messages

esp_ble_mesh_scenes_state_t ***state**

Parameters of the Scenes state

struct **esp_ble_mesh_schedule_register_t**

Parameters of Scheduler Register state

Public Members

bool **in_use**

Indicate if the registered schedule is in use

uint64_t **year**

The value of Scheduled year for the action

uint64_t **month**

The value of Scheduled month for the action

uint64_t **day**

The value of Scheduled day of the month for the action

uint64_t **hour**

The value of Scheduled hour for the action

uint64_t **minute**

The value of Scheduled minute for the action

uint64_t **second**

The value of Scheduled second for the action

uint64_t **day_of_week**

The value of Schedule days of the week for the action

uint64_t **action**

The value of Action to be performed at the scheduled time

uint64_t **trans_time**

The value of Transition time for this action

uint16_t **scene_number**

The value of Scene Number to be used for some actions

struct **esp_ble_mesh_scheduler_state_t**

Parameters of Scheduler state

Public Members

const uint8_t **schedule_count**

Scheduler count

esp_ble_mesh_schedule_register_t ***schedules**

Up to 16 scheduled entries

struct **esp_ble_mesh_scheduler_srv_t**

User data of Scheduler Server Model

Public Members

esp_ble_mesh_model_t ***model**

Pointer to the Scheduler Server Model. Initialized internally.

esp_ble_mesh_server_rsp_ctrl_t **rsp_ctrl**

Response control of the server model received messages

esp_ble_mesh_scheduler_state_t ***state**

Parameters of the Scheduler state

struct **esp_ble_mesh_scheduler_setup_srv_t**

User data of Scheduler Setup Server Model

Public Members

esp_ble_mesh_model_t ***model**

Pointer to the Scheduler Setup Server Model. Initialized internally.

esp_ble_mesh_server_rsp_ctrl_t **rsp_ctrl**

Response control of the server model received messages

esp_ble_mesh_scheduler_state_t ***state**

Parameters of the Scheduler state

struct **esp_ble_mesh_state_change_time_set_t**

Parameters of Time Set state change event

Public Members

uint8_t **tai_seconds**[5]

The current TAI time in seconds

uint8_t **subsecond**

The sub-second time in units of 1/256 second

uint8_t **uncertainty**

The estimated uncertainty in 10-millisecond steps

uint16_t **time_authority**

0 = No Time Authority, 1 = Time Authority

uint16_t **tai_utc_delta_curr**

Current difference between TAI and UTC in seconds

uint8_t **time_zone_offset_curr**

The local time zone offset in 15-minute increments

struct **esp_ble_mesh_state_change_time_status_t**

Parameters of Time Status state change event

Public Members

uint8_t **tai_seconds**[5]

The current TAI time in seconds

uint8_t **subsecond**

The sub-second time in units of 1/256 second

uint8_t **uncertainty**

The estimated uncertainty in 10-millisecond steps

uint16_t **time_authority**

0 = No Time Authority, 1 = Time Authority

uint16_t **tai_utc_delta_curr**

Current difference between TAI and UTC in seconds

uint8_t **time_zone_offset_curr**

The local time zone offset in 15-minute increments

struct **esp_ble_mesh_state_change_time_zone_set_t**

Parameters of Time Zone Set state change event

Public Members

uint8_t **time_zone_offset_new**

Upcoming local time zone offset

uint8_t **tai_zone_change**[5]

TAI Seconds time of the upcoming Time Zone Offset change

struct **esp_ble_mesh_state_change_tai_utc_delta_set_t**

Parameters of TAI UTC Delta Set state change event

Public Members

uint16_t **tai_utc_delta_new**

Upcoming difference between TAI and UTC in seconds

uint8_t **tai_delta_change**[5]

TAI Seconds time of the upcoming TAI-UTC Delta change

struct **esp_ble_mesh_state_change_time_role_set_t**

Parameter of Time Role Set state change event

Public Members

uint8_t **time_role**

The Time Role for the element

struct **esp_ble_mesh_state_change_scene_store_t**

Parameter of Scene Store state change event

Public Members

uint16_t **scene_number**

The number of scenes to be stored

struct **esp_ble_mesh_state_change_scene_recall_t**

Parameter of Scene Recall state change event

Public Members

uint16_t **scene_number**

The number of scenes to be recalled

struct **esp_ble_mesh_state_change_scene_delete_t**

Parameter of Scene Delete state change event

Public Members

uint16_t **scene_number**

The number of scenes to be deleted

struct **esp_ble_mesh_state_change_scheduler_act_set_t**

Parameter of Scheduler Action Set state change event

Public Members

uint64_t **index**

Index of the Schedule Register entry to set

uint64_t **year**

Scheduled year for the action

uint64_t **month**

Scheduled month for the action

uint64_t **day**

Scheduled day of the month for the action

uint64_t **hour**

Scheduled hour for the action

uint64_t **minute**

Scheduled minute for the action

uint64_t **second**

Scheduled second for the action

uint64_t **day_of_week**

Schedule days of the week for the action

uint64_t **action**

Action to be performed at the scheduled time

uint64_t **trans_time**

Transition time for this action

uint16_t **scene_number**

Scene number to be used for some actions

struct **esp_ble_mesh_server_recv_scheduler_act_get_t**

Context of the received Scheduler Action Get message

Public Members

uint8_t **index**

Index of the Schedule Register entry to get

struct **esp_ble_mesh_server_recv_time_set_t**

Context of the received Time Set message

Public Members

uint8_t **tai_seconds**[5]

The current TAI time in seconds

uint8_t **subsecond**

The sub-second time in units of 1/256 second

uint8_t **uncertainty**

The estimated uncertainty in 10-millisecond steps

uint16_t **time_authority**

0 = No Time Authority, 1 = Time Authority

uint16_t **tai_utc_delta**

Current difference between TAI and UTC in seconds

uint8_t **time_zone_offset**

The local time zone offset in 15-minute increments

struct **esp_ble_mesh_server_recv_time_zone_set_t**

Context of the received Time Zone Set message

Public Members

uint8_t **time_zone_offset_new**

Upcoming local time zone offset

uint8_t **tai_zone_change**[5]

TAI Seconds time of the upcoming Time Zone Offset change

struct **esp_ble_mesh_server_recv_tai_utc_delta_set_t**

Context of the received TAI UTC Delta Set message

Public Members

uint16_t **tai_utc_delta_new**

Upcoming difference between TAI and UTC in seconds

uint16_t **padding**

Always 0b0. Other values are Prohibited.

uint8_t **tai_delta_change**[5]

TAI Seconds time of the upcoming TAI-UTC Delta change

struct **esp_ble_mesh_server_recv_time_role_set_t**

Context of the received Time Role Set message

Public Members

uint8_t **time_role**

The Time Role for the element

struct **esp_ble_mesh_server_recv_scene_store_t**

Context of the received Scene Store message

Public Members

uint16_t **scene_number**

The number of scenes to be stored

struct **esp_ble_mesh_server_recv_scene_recall_t**

Context of the received Scene Recall message

Public Members

bool **op_en**

Indicate if optional parameters are included

uint16_t **scene_number**

The number of scenes to be recalled

uint8_t **tid**

Transaction ID

uint8_t **trans_time**

Time to complete state transition (optional)

uint8_t **delay**

Indicate message execution delay (C.1)

struct **esp_ble_mesh_server_recv_scene_delete_t**

Context of the received Scene Delete message

Public Members

uint16_t **scene_number**

The number of scenes to be deleted

struct **esp_ble_mesh_server_recv_scheduler_act_set_t**

Context of the received Scheduler Action Set message

Public Members

uint64_t **index**

Index of the Schedule Register entry to set

uint64_t **year**

Scheduled year for the action

uint64_t **month**

Scheduled month for the action

uint64_t **day**

Scheduled day of the month for the action

uint64_t **hour**

Scheduled hour for the action

uint64_t **minute**

Scheduled minute for the action

uint64_t **second**

Scheduled second for the action

uint64_t **day_of_week**

Schedule days of the week for the action

uint64_t **action**

Action to be performed at the scheduled time

uint64_t **trans_time**

Transition time for this action

uint16_t **scene_number**

Scene number to be used for some actions

struct **esp_ble_mesh_server_recv_time_status_t**

Context of the received Time Status message

Public Members

uint8_t **tai_seconds**[5]

The current TAI time in seconds

uint8_t **subsecond**

The sub-second time in units of 1/256 second

uint8_t **uncertainty**

The estimated uncertainty in 10-millisecond steps

uint16_t **time_authority**

0 = No Time Authority, 1 = Time Authority

uint16_t **tai_utc_delta**

Current difference between TAI and UTC in seconds

uint8_t **time_zone_offset**

The local time zone offset in 15-minute increments

struct **esp_ble_mesh_time_scene_server_cb_param_t**

Time Scene Server Model callback parameters

Public Members

esp_ble_mesh_model_t ***model**

Pointer to Time and Scenes Server Models

esp_ble_mesh_msg_ctx_t **ctx**

Context of the received messages

esp_ble_mesh_time_scene_server_cb_value_t **value**

Value of the received Time and Scenes Messages

Macros

ESP_BLE_MESH_MODEL_TIME_CLI(cli_pub, cli_data)

Define a new Time Client Model.

Note: This API needs to be called for each element on which the application needs to have a Time Client Model.

Parameters

- **cli_pub** –Pointer to the unique struct *esp_ble_mesh_model_pub_t*.
- **cli_data** –Pointer to the unique struct *esp_ble_mesh_client_t*.

Returns New Time Client Model instance.

ESP_BLE_MESH_MODEL_SCENE_CLI(cli_pub, cli_data)

Define a new Scene Client Model.

Note: This API needs to be called for each element on which the application needs to have a Scene Client Model.

Parameters

- **cli_pub** –Pointer to the unique struct *esp_ble_mesh_model_pub_t*.
- **cli_data** –Pointer to the unique struct *esp_ble_mesh_client_t*.

Returns New Scene Client Model instance.

ESP_BLE_MESH_MODEL_SCHEDULER_CLI (cli_pub, cli_data)

Define a new Scheduler Client Model.

Note: This API needs to be called for each element on which the application needs to have a Scheduler Client Model.

Parameters

- **cli_pub** –Pointer to the unique struct *esp_ble_mesh_model_pub_t*.
- **cli_data** –Pointer to the unique struct *esp_ble_mesh_client_t*.

Returns New Scheduler Client Model instance.

ESP_BLE_MESH_MODEL_TIME_SRV (srv_pub, srv_data)

Time Scene Server Models related context.

Define a new Time Server Model.

Note: 1. The Time Server model is a root model. When this model is present on an Element, the corresponding Time Setup Server model shall also be present.

a. This model shall support model publication and model subscription.

Parameters

- **srv_pub** –Pointer to the unique struct *esp_ble_mesh_model_pub_t*.
- **srv_data** –Pointer to the unique struct *esp_ble_mesh_time_srv_t*.

Returns New Time Server Model instance.

ESP_BLE_MESH_MODEL_TIME_SETUP_SRV (srv_data)

Define a new Time Setup Server Model.

Note: 1. The Time Setup Server model extends the Time Server model. Time is sensitive information that is propagated across a mesh network.

a. Only an authorized Time Client should be allowed to change the Time and Time Role states. A dedicated application key Bluetooth SIG Proprietary should be used on the Time Setup Server to restrict access to the server to only authorized Time Clients.
b. This model does not support subscribing nor publishing.

Parameters

- **srv_data** –Pointer to the unique struct *esp_ble_mesh_time_setup_srv_t*.

Returns New Time Setup Server Model instance.

ESP_BLE_MESH_MODEL_SCENE_SRV (srv_pub, srv_data)

Define a new Scene Server Model.

Note: 1. The Scene Server model is a root model. When this model is present on an Element, the corresponding Scene Setup Server model shall also be present.

a. This model shall support model publication and model subscription.
b. The model may be present only on the Primary element of a node.

Parameters

- **srv_pub** –Pointer to the unique struct *esp_ble_mesh_model_pub_t*.
- **srv_data** –Pointer to the unique struct *esp_ble_mesh_scene_srv_t*.

Returns New Scene Server Model instance.

ESP_BLE_MESH_MODEL_SCENE_SETUP_SRV(srv_pub, srv_data)

Define a new Scene Setup Server Model.

Note: 1. The Scene Setup Server model extends the Scene Server model and the Generic Default Transition Time Server model.

a. This model shall support model subscription.
b. The model may be present only on the Primary element of a node.

Parameters
- **srv_pub** –Pointer to the unique struct *esp_ble_mesh_model_pub_t*.
- **srv_data** –Pointer to the unique struct *esp_ble_mesh_scene_setup_srv_t*.

Returns New Scene Setup Server Model instance.

ESP_BLE_MESH_MODEL_SCHEDULER_SRV(srv_pub, srv_data)

Define a new Scheduler Server Model.

Note: 1. The Scheduler Server model extends the Scene Server model. When this model is present on an Element, the corresponding Scheduler Setup Server model shall also be present.

a. This model shall support model publication and model subscription.
b. The model may be present only on the Primary element of a node.
c. The model requires the Time Server model shall be present on the element.

Parameters
- **srv_pub** –Pointer to the unique struct *esp_ble_mesh_model_pub_t*.
- **srv_data** –Pointer to the unique struct *esp_ble_mesh_scheduler_srv_t*.

Returns New Scheduler Server Model instance.

ESP_BLE_MESH_MODEL_SCHEDULER_SETUP_SRV(srv_pub, srv_data)

Define a new Scheduler Setup Server Model.

Note: 1. The Scheduler Setup Server model extends the Scheduler Server and the Scene Setup Server models.

a. This model shall support model subscription.
b. The model may be present only on the Primary element of a node.

Parameters
- **srv_pub** –Pointer to the unique struct *esp_ble_mesh_model_pub_t*.
- **srv_data** –Pointer to the unique struct *esp_ble_mesh_scheduler_setup_srv_t*.

Returns New Scheduler Setup Server Model instance.

ESP_BLE_MESH_UNKNOWN_TAI_SECONDS

Unknown TAI Seconds

ESP_BLE_MESH_UNKNOWN_TAI_ZONE_CHANGE

Unknown TAI of Zone Change

ESP_BLE_MESH_UNKNOWN_TAI_DELTA_CHANGE

Unknown TAI of Delta Change

ESP_BLE_MESH_TAI_UTC_DELTA_MAX_VALUE

Maximum TAI-UTC Delta value

ESP_BLE_MESH_TAI_SECONDS_LEN

Length of TAI Seconds

ESP_BLE_MESH_TAI_OF_ZONE_CHANGE_LEN

Length of TAI of Zone Change

ESP_BLE_MESH_TAI_OF_DELTA_CHANGE_LEN

Length of TAI of Delta Change

ESP_BLE_MESH_INVALID_SCENE_NUMBER

Invalid Scene Number

ESP_BLE_MESH_SCENE_NUMBER_LEN

Length of the Scene Number

ESP_BLE_MESH_SCHEDULE_YEAR_ANY_YEAR

Any year of the Scheduled year

ESP_BLE_MESH_SCHEDULE_DAY_ANY_DAY

Any day of the Scheduled day

ESP_BLE_MESH_SCHEDULE_HOUR_ANY_HOUR

Any hour of the Scheduled hour

ESP_BLE_MESH_SCHEDULE_HOUR_ONCE_A_DAY

Any hour of the Scheduled Day

ESP_BLE_MESH_SCHEDULE_SEC_ANY_OF_HOUR

Any minute of the Scheduled hour

ESP_BLE_MESH_SCHEDULE_SEC_EVERY_15_MIN

Every 15 minutes of the Scheduled hour

ESP_BLE_MESH_SCHEDULE_SEC_EVERY_20_MIN

Every 20 minutes of the Scheduled hour

ESP_BLE_MESH_SCHEDULE_SEC_ONCE_AN_HOUR

Once of the Scheduled hour

ESP_BLE_MESH_SCHEDULE_SEC_ANY_OF_MIN

Any second of the Scheduled minute

ESP_BLE_MESH_SCHEDULE_SEC_EVERY_15_SEC

Every 15 seconds of the Scheduled minute

ESP_BLE_MESH_SCHEDULE_SEC_EVERY_20_SEC

Every 20 seconds of the Scheduled minute

ESP_BLE_MESH_SCHEDULE_SEC_ONCE_AN_MIN

Once of the Scheduled minute

ESP_BLE_MESH_SCHEDULE_ACT_TURN_OFF

Scheduled Action - Turn Off

ESP_BLE_MESH_SCHEDULE_ACT_TURN_ON

Scheduled Action - Turn On

ESP_BLE_MESH_SCHEDULE_ACT_SCENE_RECALL

Scheduled Action - Scene Recall

ESP_BLE_MESH_SCHEDULE_ACT_NO_ACTION

Scheduled Action - No Action

ESP_BLE_MESH_SCHEDULE_SCENE_NO_SCENE

Scheduled Scene - No Scene

ESP_BLE_MESH_SCHEDULE_ENTRY_MAX_INDEX

Maximum number of Scheduled entries

ESP_BLE_MESH_TIME_NONE

Time Role - None

ESP_BLE_MESH_TIME_AUTHORITY

Time Role - Mesh Time Authority

ESP_BLE_MESH_TIME_RELAY

Time Role - Mesh Time Relay

ESP_BLE_MESH_TIME_CLINET

Time Role - Mesh Time Client

ESP_BLE_MESH_SCENE_SUCCESS

Scene operation - Success

ESP_BLE_MESH_SCENE_REG_FULL

Scene operation - Scene Register Full

ESP_BLE_MESH_SCENE_NOT_FOUND

Scene operation - Scene Not Found

Type Definitions

typedef void (***esp_ble_mesh_time_scene_client_cb_t***)(*esp_ble_mesh_time_scene_client_cb_event_t* event, *esp_ble_mesh_time_scene_client_cb_param_t* *param)

Bluetooth Mesh Time Scene Client Model function.

Time Scene Client Model callback function type

Param event Event type
Param param Pointer to callback parameter

typedef void (***esp_ble_mesh_time_scene_server_cb_t***)(*esp_ble_mesh_time_scene_server_cb_event_t* event, *esp_ble_mesh_time_scene_server_cb_param_t* *param)

Bluetooth Mesh Time and Scenes Server Model function.

Time Scene Server Model callback function type

Param event Event type
Param param Pointer to callback parameter

Enumerations

enum **esp_ble_mesh_time_scene_client_cb_event_t**

This enum value is the event of Time Scene Client Model

Values:

enumerator **ESP_BLE_MESH_TIME_SCENE_CLIENT_GET_STATE_EVT**

enumerator **ESP_BLE_MESH_TIME_SCENE_CLIENT_SET_STATE_EVT**

enumerator **ESP_BLE_MESH_TIME_SCENE_CLIENT_PUBLISH_EVT**

enumerator **ESP_BLE_MESH_TIME_SCENE_CLIENT_TIMEOUT_EVT**

enumerator **ESP_BLE_MESH_TIME_SCENE_CLIENT_EVT_MAX**

enum **esp_ble_mesh_time_scene_server_cb_event_t**

This enum value is the event of Time Scene Server Model

Values:

enumerator **ESP_BLE_MESH_TIME_SCENE_SERVER_STATE_CHANGE_EVT**

i. When get_auto_rsp is set to ESP_BLE_MESH_SERVER_AUTO_RSP, no event will be callback to the application layer when Time Scene Get messages are received.
ii. When set_auto_rsp is set to ESP_BLE_MESH_SERVER_AUTO_RSP, this event will be callback to the application layer when Time Scene Set/Set Unack messages are received.

enumerator **ESP_BLE_MESH_TIME_SCENE_SERVER_RECV_GET_MSG_EVT**

When get_auto_rsp is set to ESP_BLE_MESH_SERVER_RSP_BY_APP, this event will be callback to the application layer when Time Scene Get messages are received.

enumerator **ESP_BLE_MESH_TIME_SCENE_SERVER_RECV_SET_MSG_EVT**

When set_auto_rsp is set to ESP_BLE_MESH_SERVER_RSP_BY_APP, this event will be callback to the application layer when Time Scene Set/Set Unack messages are received.

enumerator **ESP_BLE_MESH_TIME_SCENE_SERVER_RECV_STATUS_MSG_EVT**

When status_auto_rsp is set to ESP_BLE_MESH_SERVER_RSP_BY_APP, this event will be callback to the application layer when TIme Status message is received.

enumerator **ESP_BLE_MESH_TIME_SCENE_SERVER_EVT_MAX**

Lighting Client/Server Models

Header File

- components/bt/esp_ble_mesh/api/models/include/esp_ble_mesh_lighting_model_api.h

Functions

esp_err_t **esp_ble_mesh_register_light_client_callback**(*esp_ble_mesh_light_client_cb_t* callback)

Register BLE Mesh Light Client Model callback.

Parameters **callback** –**[in]** pointer to the callback function.
Returns ESP_OK on success or error code otherwise.

esp_err_t **esp_ble_mesh_light_client_get_state**(*esp_ble_mesh_client_common_param_t* *params, *esp_ble_mesh_light_client_get_state_t* *get_state)

Get the value of Light Server Model states using the Light Client Model get messages.

Note: If you want to know the opcodes and corresponding meanings accepted by this API, please refer to esp_ble_mesh_light_message_opcode_t in esp_ble_mesh_defs.h

---

Parameters
- **params** –**[in]** Pointer to BLE Mesh common client parameters.
- **get_state** –**[in]** Pointer of light get message value. Shall not be set to NULL.

Returns ESP_OK on success or error code otherwise.

esp_err_t **esp_ble_mesh_light_client_set_state**(*esp_ble_mesh_client_common_param_t* *params, *esp_ble_mesh_light_client_set_state_t* *set_state)

Set the value of Light Server Model states using the Light Client Model set messages.

Note: If you want to know the opcodes and corresponding meanings accepted by this API, please refer to esp_ble_mesh_light_message_opcode_t in esp_ble_mesh_defs.h

---

Parameters
- **params** –**[in]** Pointer to BLE Mesh common client parameters.
- **set_state** –**[in]** Pointer of light set message value. Shall not be set to NULL.

Returns ESP_OK on success or error code otherwise.

esp_err_t **esp_ble_mesh_register_lighting_server_callback**(*esp_ble_mesh_lighting_server_cb_t* callback)

Register BLE Mesh Lighting Server Model callback.

Parameters **callback** –**[in]** Pointer to the callback function.
Returns ESP_OK on success or error code otherwise.

Unions

union **esp_ble_mesh_light_client_get_state_t**

#include <esp_ble_mesh_lighting_model_api.h> Lighting Client Model get message union.

Public Members

esp_ble_mesh_light_lc_property_get_t **lc_property_get**

For ESP_BLE_MESH_MODEL_OP_LIGHT_LC_PROPERTY_GET

union **esp_ble_mesh_light_client_set_state_t**

#include <esp_ble_mesh_lighting_model_api.h> Lighting Client Model set message union.

Public Members

esp_ble_mesh_light_lightness_set_t **lightness_set**

For ESP_BLE_MESH_MODEL_OP_LIGHT_LIGHTNESS_SET & ESP_BLE_MESH_MODEL_OP_LIGHT_LIGHTNESS_SET_UNACK

esp_ble_mesh_light_lightness_linear_set_t **lightness_linear_set**

For ESP_BLE_MESH_MODEL_OP_LIGHT_LIGHTNESS_LINEAR_SET & ESP_BLE_MESH_MODEL_OP_LIGHT_LIGHTNESS_LINEAR_SET_UNACK

esp_ble_mesh_light_lightness_default_set_t **lightness_default_set**

For ESP_BLE_MESH_MODEL_OP_LIGHT_LIGHTNESS_DEFAULT_SET & ESP_BLE_MESH_MODEL_OP_LIGHT_LIGHTNESS_DEFAULT_SET_UNACK

esp_ble_mesh_light_lightness_range_set_t **lightness_range_set**

For ESP_BLE_MESH_MODEL_OP_LIGHT_LIGHTNESS_RANGE_SET & ESP_BLE_MESH_MODEL_OP_LIGHT_LIGHTNESS_RANGE_SET_UNACK

esp_ble_mesh_light_ctl_set_t **ctl_set**

For ESP_BLE_MESH_MODEL_OP_LIGHT_CTL_SET & ESP_BLE_MESH_MODEL_OP_LIGHT_CTL_SET_UNA

esp_ble_mesh_light_ctl_temperature_set_t **ctl_temperature_set**

For ESP_BLE_MESH_MODEL_OP_LIGHT_CTL_TEMPERATURE_SET & ESP_BLE_MESH_MODEL_OP_LIGHT_CTL_TEMPERATURE_SET_UNACK

esp_ble_mesh_light_ctl_temperature_range_set_t **ctl_temperature_range_set**

For ESP_BLE_MESH_MODEL_OP_LIGHT_CTL_TEMPERATURE_RANGE_SET & ESP_BLE_MESH_MODEL_OP_LIGHT_CTL_TEMPERATURE_RANGE_SET_UNACK

esp_ble_mesh_light_ctl_default_set_t **ctl_default_set**

For ESP_BLE_MESH_MODEL_OP_LIGHT_CTL_DEFAULT_SET & ESP_BLE_MESH_MODEL_OP_LIGHT_CTL_DEFAULT_SET_UNACK

esp_ble_mesh_light_hsl_set_t **hsl_set**

For ESP_BLE_MESH_MODEL_OP_LIGHT_HSL_SET & ESP_BLE_MESH_MODEL_OP_LIGHT_HSL_SET_UNA

esp_ble_mesh_light_hsl_hue_set_t **hsl_hue_set**

For ESP_BLE_MESH_MODEL_OP_LIGHT_HSL_HUE_SET & ESP_BLE_MESH_MODEL_OP_LIGHT_HSL_HUE

esp_ble_mesh_light_hsl_saturation_set_t **hsl_saturation_set**

For ESP_BLE_MESH_MODEL_OP_LIGHT_HSL_SATURATION_SET & ESP_BLE_MESH_MODEL_OP_LIGHT_HSL_SATURATION_SET_UNACK

esp_ble_mesh_light_hsl_default_set_t **hsl_default_set**

For ESP_BLE_MESH_MODEL_OP_LIGHT_HSL_DEFAULT_SET & ESP_BLE_MESH_MODEL_OP_LIGHT_HSL_DEFAULT_SET_UNACK

esp_ble_mesh_light_hsl_range_set_t **hsl_range_set**

For ESP_BLE_MESH_MODEL_OP_LIGHT_HSL_RANGE_SET & ESP_BLE_MESH_MODEL_OP_LIGHT_HSL_RANGE_SET_UNACK

esp_ble_mesh_light_xyl_set_t **xyl_set**

For ESP_BLE_MESH_MODEL_OP_LIGHT_XYL_SET & ESP_BLE_MESH_MODEL_OP_LIGHT_XYL_SET_UNA

esp_ble_mesh_light_xyl_default_set_t **xyl_default_set**

For ESP_BLE_MESH_MODEL_OP_LIGHT_XYL_DEFAULT_SET & ESP_BLE_MESH_MODEL_OP_LIGHT_XYL_DEFAULT_SET_UNACK

esp_ble_mesh_light_xyl_range_set_t **xyl_range_set**

For ESP_BLE_MESH_MODEL_OP_LIGHT_XYL_RANGE_SET & ESP_BLE_MESH_MODEL_OP_LIGHT_XYL_RANGE_SET_UNACK

esp_ble_mesh_light_lc_mode_set_t **lc_mode_set**

For ESP_BLE_MESH_MODEL_OP_LIGHT_LC_MODE_SET & ESP_BLE_MESH_MODEL_OP_LIGHT_LC_MODE_SET_UNACK

esp_ble_mesh_light_lc_om_set_t **lc_om_set**

For ESP_BLE_MESH_MODEL_OP_LIGHT_LC_OM_SET & ESP_BLE_MESH_MODEL_OP_LIGHT_LC_OM_SET

esp_ble_mesh_light_lc_light_onoff_set_t **lc_light_onoff_set**

For ESP_BLE_MESH_MODEL_OP_LIGHT_LC_LIGHT_ONOFF_SET & ESP_BLE_MESH_MODEL_OP_LIGHT_LC_LIGHT_ONOFF_SET_UNACK

esp_ble_mesh_light_lc_property_set_t **lc_property_set**

For ESP_BLE_MESH_MODEL_OP_LIGHT_LC_PROPERTY_SET & ESP_BLE_MESH_MODEL_OP_LIGHT_LC_PROPERTY_SET_UNACK

union **esp_ble_mesh_light_client_status_cb_t**

#include <esp_ble_mesh_lighting_model_api.h> Lighting Client Model received message union.

Public Members

esp_ble_mesh_light_lightness_status_cb_t **lightness_status**

For ESP_BLE_MESH_MODEL_OP_LIGHT_LIGHTNESS_STATUS

esp_ble_mesh_light_lightness_linear_status_cb_t **lightness_linear_status**

For ESP_BLE_MESH_MODEL_OP_LIGHT_LIGHTNESS_LINEAR_STATUS

esp_ble_mesh_light_lightness_last_status_cb_t **lightness_last_status**

For ESP_BLE_MESH_MODEL_OP_LIGHT_LIGHTNESS_LAST_STATUS

esp_ble_mesh_light_lightness_default_status_cb_t **lightness_default_status**

For ESP_BLE_MESH_MODEL_OP_LIGHT_LIGHTNESS_DEFAULT_STATUS

esp_ble_mesh_light_lightness_range_status_cb_t **lightness_range_status**

For ESP_BLE_MESH_MODEL_OP_LIGHT_LIGHTNESS_RANGE_STATUS

esp_ble_mesh_light_ctl_status_cb_t **ctl_status**

For ESP_BLE_MESH_MODEL_OP_LIGHT_CTL_STATUS

esp_ble_mesh_light_ctl_temperature_status_cb_t **ctl_temperature_status**

For ESP_BLE_MESH_MODEL_OP_LIGHT_CTL_TEMPERATURE_STATUS

esp_ble_mesh_light_ctl_temperature_range_status_cb_t **ctl_temperature_range_status**

For ESP_BLE_MESH_MODEL_OP_LIGHT_CTL_TEMPERATURE_RANGE_STATUS

esp_ble_mesh_light_ctl_default_status_cb_t **ctl_default_status**

For ESP_BLE_MESH_MODEL_OP_LIGHT_CTL_DEFAULT_STATUS

esp_ble_mesh_light_hsl_status_cb_t **hsl_status**

For ESP_BLE_MESH_MODEL_OP_LIGHT_HSL_STATUS

esp_ble_mesh_light_hsl_target_status_cb_t **hsl_target_status**

For ESP_BLE_MESH_MODEL_OP_LIGHT_HSL_TARGET_STATUS

esp_ble_mesh_light_hsl_hue_status_cb_t **hsl_hue_status**

For ESP_BLE_MESH_MODEL_OP_LIGHT_HSL_HUE_STATUS

esp_ble_mesh_light_hsl_saturation_status_cb_t **hsl_saturation_status**

For ESP_BLE_MESH_MODEL_OP_LIGHT_HSL_SATURATION_STATUS

esp_ble_mesh_light_hsl_default_status_cb_t **hsl_default_status**

For ESP_BLE_MESH_MODEL_OP_LIGHT_HSL_DEFAULT_STATUS

esp_ble_mesh_light_hsl_range_status_cb_t **hsl_range_status**

For ESP_BLE_MESH_MODEL_OP_LIGHT_HSL_RANGE_STATUS

esp_ble_mesh_light_xyl_status_cb_t **xyl_status**

For ESP_BLE_MESH_MODEL_OP_LIGHT_XYL_STATUS

esp_ble_mesh_light_xyl_target_status_cb_t **xyl_target_status**

For ESP_BLE_MESH_MODEL_OP_LIGHT_XYL_TARGET_STATUS

esp_ble_mesh_light_xyl_default_status_cb_t **xyl_default_status**

For ESP_BLE_MESH_MODEL_OP_LIGHT_XYL_DEFAULT_STATUS

esp_ble_mesh_light_xyl_range_status_cb_t **xyl_range_status**

For ESP_BLE_MESH_MODEL_OP_LIGHT_XYL_RANGE_STATUS

esp_ble_mesh_light_lc_mode_status_cb_t **lc_mode_status**

For ESP_BLE_MESH_MODEL_OP_LIGHT_LC_MODE_STATUS

esp_ble_mesh_light_lc_om_status_cb_t **lc_om_status**

For ESP_BLE_MESH_MODEL_OP_LIGHT_LC_OM_STATUS

esp_ble_mesh_light_lc_light_onoff_status_cb_t **lc_light_onoff_status**

For ESP_BLE_MESH_MODEL_OP_LIGHT_LC_LIGHT_ONOFF_STATUS

esp_ble_mesh_light_lc_property_status_cb_t **lc_property_status**

For ESP_BLE_MESH_MODEL_OP_LIGHT_LC_PROPERTY_STATUS

union **esp_ble_mesh_lighting_server_state_change_t**

#include <esp_ble_mesh_lighting_model_api.h> Lighting Server Model state change value union.

Public Members

esp_ble_mesh_state_change_light_lightness_set_t **lightness_set**

The recv_op in ctx can be used to decide which state is changed.Light Lightness Set

esp_ble_mesh_state_change_light_lightness_linear_set_t **lightness_linear_set**

Light Lightness Linear Set

esp_ble_mesh_state_change_light_lightness_default_set_t **lightness_default_set**

Light Lightness Default Set

esp_ble_mesh_state_change_light_lightness_range_set_t **lightness_range_set**

Light Lightness Range Set

esp_ble_mesh_state_change_light_ctl_set_t **ctl_set**

Light CTL Set

esp_ble_mesh_state_change_light_ctl_temperature_set_t **ctl_temp_set**

Light CTL Temperature Set

esp_ble_mesh_state_change_light_ctl_temperature_range_set_t **ctl_temp_range_set**

Light CTL Temperature Range Set

esp_ble_mesh_state_change_light_ctl_default_set_t **ctl_default_set**

Light CTL Default Set

esp_ble_mesh_state_change_light_hsl_set_t **hsl_set**
Light HSL Set

esp_ble_mesh_state_change_light_hsl_hue_set_t **hsl_hue_set**
Light HSL Hue Set

esp_ble_mesh_state_change_light_hsl_saturation_set_t **hsl_saturation_set**
Light HSL Saturation Set

esp_ble_mesh_state_change_light_hsl_default_set_t **hsl_default_set**
Light HSL Default Set

esp_ble_mesh_state_change_light_hsl_range_set_t **hsl_range_set**
Light HSL Range Set

esp_ble_mesh_state_change_light_xyl_set_t **xyl_set**
Light xyL Set

esp_ble_mesh_state_change_light_xyl_default_set_t **xyl_default_set**
Light xyL Default Set

esp_ble_mesh_state_change_light_xyl_range_set_t **xyl_range_set**
Light xyL Range Set

esp_ble_mesh_state_change_light_lc_mode_set_t **lc_mode_set**
Light LC Mode Set

esp_ble_mesh_state_change_light_lc_om_set_t **lc_om_set**
Light LC Occupancy Mode Set

esp_ble_mesh_state_change_light_lc_light_onoff_set_t **lc_light_onoff_set**
Light LC Light OnOff Set

esp_ble_mesh_state_change_light_lc_property_set_t **lc_property_set**
Light LC Property Set

esp_ble_mesh_state_change_sensor_status_t **sensor_status**
Sensor Status

union **esp_ble_mesh_lighting_server_recv_get_msg_t**
#include <esp_ble_mesh_lighting_model_api.h> Lighting Server Model received get message union.

Public Members

esp_ble_mesh_server_recv_light_lc_property_get_t **lc_property**
Light LC Property Get

union **esp_ble_mesh_lighting_server_recv_set_msg_t**
#include <esp_ble_mesh_lighting_model_api.h> Lighting Server Model received set message union.

Public Members

esp_ble_mesh_server_recv_light_lightness_set_t **lightness**

Light Lightness Set/Light Lightness Set Unack

esp_ble_mesh_server_recv_light_lightness_linear_set_t **lightness_linear**

Light Lightness Linear Set/Light Lightness Linear Set Unack

esp_ble_mesh_server_recv_light_lightness_default_set_t **lightness_default**

Light Lightness Default Set/Light Lightness Default Set Unack

esp_ble_mesh_server_recv_light_lightness_range_set_t **lightness_range**

Light Lightness Range Set/Light Lightness Range Set Unack

esp_ble_mesh_server_recv_light_ctl_set_t **ctl**

Light CTL Set/Light CTL Set Unack

esp_ble_mesh_server_recv_light_ctl_temperature_set_t **ctl_temp**

Light CTL Temperature Set/Light CTL Temperature Set Unack

esp_ble_mesh_server_recv_light_ctl_temperature_range_set_t **ctl_temp_range**

Light CTL Temperature Range Set/Light CTL Temperature Range Set Unack

esp_ble_mesh_server_recv_light_ctl_default_set_t **ctl_default**

Light CTL Default Set/Light CTL Default Set Unack

esp_ble_mesh_server_recv_light_hsl_set_t **hsl**

Light HSL Set/Light HSL Set Unack

esp_ble_mesh_server_recv_light_hsl_hue_set_t **hsl_hue**

Light HSL Hue Set/Light HSL Hue Set Unack

esp_ble_mesh_server_recv_light_hsl_saturation_set_t **hsl_saturation**

Light HSL Saturation Set/Light HSL Saturation Set Unack

esp_ble_mesh_server_recv_light_hsl_default_set_t **hsl_default**

Light HSL Default Set/Light HSL Default Set Unack

esp_ble_mesh_server_recv_light_hsl_range_set_t **hsl_range**

Light HSL Range Set/Light HSL Range Set Unack

esp_ble_mesh_server_recv_light_xyl_set_t **xyl**

Light xyL Set/Light xyL Set Unack

esp_ble_mesh_server_recv_light_xyl_default_set_t **xyl_default**

Light xyL Default Set/Light xyL Default Set Unack

esp_ble_mesh_server_recv_light_xyl_range_set_t **xyl_range**

Light xyL Range Set/Light xyL Range Set Unack

esp_ble_mesh_server_recv_light_lc_mode_set_t **lc_mode**

Light LC Mode Set/Light LC Mode Set Unack

esp_ble_mesh_server_recv_light_lc_om_set_t **lc_om**

Light LC OM Set/Light LC OM Set Unack

esp_ble_mesh_server_recv_light_lc_light_onoff_set_t **lc_light_onoff**

Light LC Light OnOff Set/Light LC Light OnOff Set Unack

esp_ble_mesh_server_recv_light_lc_property_set_t **lc_property**

Light LC Property Set/Light LC Property Set Unack

union **esp_ble_mesh_lighting_server_recv_status_msg_t**

#include <esp_ble_mesh_lighting_model_api.h> Lighting Server Model received status message union.

Public Members

esp_ble_mesh_server_recv_sensor_status_t **sensor_status**

Sensor Status

union **esp_ble_mesh_lighting_server_cb_value_t**

#include <esp_ble_mesh_lighting_model_api.h> Lighting Server Model callback value union.

Public Members

esp_ble_mesh_lighting_server_state_change_t **state_change**

ESP_BLE_MESH_LIGHTING_SERVER_STATE_CHANGE_EVT

esp_ble_mesh_lighting_server_recv_get_msg_t **get**

ESP_BLE_MESH_LIGHTING_SERVER_RECV_GET_MSG_EVT

esp_ble_mesh_lighting_server_recv_set_msg_t **set**

ESP_BLE_MESH_LIGHTING_SERVER_RECV_SET_MSG_EVT

esp_ble_mesh_lighting_server_recv_status_msg_t **status**

ESP_BLE_MESH_LIGHTING_SERVER_RECV_STATUS_MSG_EVT

Structures

struct **esp_ble_mesh_light_lightness_set_t**

Bluetooth Mesh Light Lightness Client Model Get and Set parameters structure.

Parameters of Light Lightness Set

Public Members

bool **op_en**

Indicate if optional parameters are included

uint16_t **lightness**

Target value of light lightness actual state

uint8_t **tid**

Transaction ID

uint8_t **trans_time**

Time to complete state transition (optional)

uint8_t **delay**

Indicate message execution delay (C.1)

struct **esp_ble_mesh_light_lightness_linear_set_t**

Parameters of Light Lightness Linear Set

Public Members

bool **op_en**

Indicate if optional parameters are included

uint16_t **lightness**

Target value of light lightness linear state

uint8_t **tid**

Transaction ID

uint8_t **trans_time**

Time to complete state transition (optional)

uint8_t **delay**

Indicate message execution delay (C.1)

struct **esp_ble_mesh_light_lightness_default_set_t**

Parameter of Light Lightness Default Set

Public Members

uint16_t **lightness**

The value of the Light Lightness Default state

struct **esp_ble_mesh_light_lightness_range_set_t**

Parameters of Light Lightness Range Set

Public Members

uint16_t **range_min**

Value of range min field of light lightness range state

uint16_t **range_max**

Value of range max field of light lightness range state

struct **esp_ble_mesh_light_ctl_set_t**

Parameters of Light CTL Set

Public Members

bool **op_en**

Indicate if optional parameters are included

uint16_t **ctl_lightness**

Target value of light ctl lightness state

uint16_t **ctl_temperatrue**

Target value of light ctl temperature state

int16_t **ctl_delta_uv**

Target value of light ctl delta UV state

uint8_t **tid**

Transaction ID

uint8_t **trans_time**

Time to complete state transition (optional)

uint8_t **delay**

Indicate message execution delay (C.1)

struct **esp_ble_mesh_light_ctl_temperature_set_t**

Parameters of Light CTL Temperature Set

Public Members

bool **op_en**

Indicate if optional parameters are included

uint16_t **ctl_temperatrue**

Target value of light ctl temperature state

int16_t **ctl_delta_uv**

Target value of light ctl delta UV state

uint8_t **tid**

Transaction ID

uint8_t **trans_time**

Time to complete state transition (optional)

uint8_t **delay**

Indicate message execution delay (C.1)

struct **esp_ble_mesh_light_ctl_temperature_range_set_t**

Parameters of Light CTL Temperature Range Set

Public Members

uint16_t **range_min**

Value of temperature range min field of light ctl temperature range state

uint16_t **range_max**

Value of temperature range max field of light ctl temperature range state

struct **esp_ble_mesh_light_ctl_default_set_t**

Parameters of Light CTL Default Set

Public Members

uint16_t **lightness**

Value of light lightness default state

uint16_t **temperature**

Value of light temperature default state

int16_t **delta_uv**

Value of light delta UV default state

struct **esp_ble_mesh_light_hsl_set_t**

Parameters of Light HSL Set

Public Members

bool **op_en**

Indicate if optional parameters are included

uint16_t **hsl_lightness**

Target value of light hsl lightness state

uint16_t **hsl_hue**

Target value of light hsl hue state

uint16_t **hsl_saturation**

Target value of light hsl saturation state

uint8_t **tid**

Transaction ID

uint8_t **trans_time**

Time to complete state transition (optional)

uint8_t **delay**

Indicate message execution delay (C.1)

struct **esp_ble_mesh_light_hsl_hue_set_t**

Parameters of Light HSL Hue Set

Public Members

bool **op_en**

Indicate if optional parameters are included

uint16_t **hue**

Target value of light hsl hue state

uint8_t **tid**

Transaction ID

uint8_t **trans_time**

Time to complete state transition (optional)

uint8_t **delay**

Indicate message execution delay (C.1)

struct **esp_ble_mesh_light_hsl_saturation_set_t**

Parameters of Light HSL Saturation Set

Public Members

bool **op_en**

Indicate if optional parameters are included

uint16_t **saturation**

Target value of light hsl hue state

uint8_t **tid**

Transaction ID

uint8_t **trans_time**

Time to complete state transition (optional)

uint8_t **delay**

Indicate message execution delay (C.1)

struct **esp_ble_mesh_light_hsl_default_set_t**

Parameters of Light HSL Default Set

Public Members

uint16_t **lightness**

Value of light lightness default state

uint16_t **hue**

Value of light hue default state

uint16_t **saturation**

Value of light saturation default state

struct **esp_ble_mesh_light_hsl_range_set_t**

Parameters of Light HSL Range Set

Public Members

uint16_t **hue_range_min**

Value of hue range min field of light hsl hue range state

uint16_t **hue_range_max**

Value of hue range max field of light hsl hue range state

uint16_t **saturation_range_min**

Value of saturation range min field of light hsl saturation range state

uint16_t **saturation_range_max**

Value of saturation range max field of light hsl saturation range state

struct **esp_ble_mesh_light_xyl_set_t**

Parameters of Light xyL Set

Public Members

bool **op_en**

Indicate whether optional parameters included

uint16_t **xyl_lightness**

The target value of the Light xyL Lightness state

uint16_t **xyl_x**

The target value of the Light xyL x state

uint16_t **xyl_y**

The target value of the Light xyL y state

uint8_t **tid**

Transaction Identifier

uint8_t **trans_time**

Time to complete state transition (optional)

uint8_t **delay**

Indicate message execution delay (C.1)

struct **esp_ble_mesh_light_xyl_default_set_t**

Parameters of Light xyL Default Set

Public Members

uint16_t **lightness**

The value of the Light Lightness Default state

uint16_t **xyl_x**

The value of the Light xyL x Default state

uint16_t **xyl_y**

The value of the Light xyL y Default state

struct **esp_ble_mesh_light_xyl_range_set_t**

Parameters of Light xyL Range Set

Public Members

uint16_t **xyl_x_range_min**

The value of the xyL x Range Min field of the Light xyL x Range state

uint16_t **xyl_x_range_max**

The value of the xyL x Range Max field of the Light xyL x Range state

uint16_t **xyl_y_range_min**

The value of the xyL y Range Min field of the Light xyL y Range state

uint16_t **xyl_y_range_max**

The value of the xyL y Range Max field of the Light xyL y Range state

struct **esp_ble_mesh_light_lc_mode_set_t**

Parameter of Light LC Mode Set

Public Members

uint8_t **mode**

The target value of the Light LC Mode state

struct **esp_ble_mesh_light_lc_om_set_t**

Parameter of Light LC OM Set

Public Members

uint8_t **mode**

The target value of the Light LC Occupancy Mode state

struct **esp_ble_mesh_light_lc_light_onoff_set_t**

Parameters of Light LC Light OnOff Set

Public Members

bool **op_en**

Indicate whether optional parameters included

uint8_t **light_onoff**

The target value of the Light LC Light OnOff state

uint8_t **tid**

Transaction Identifier

uint8_t **trans_time**

Time to complete state transition (optional)

uint8_t **delay**

Indicate message execution delay (C.1)

struct **esp_ble_mesh_light_lc_property_get_t**

Parameter of Light LC Property Get

Public Members

uint16_t **property_id**

Property ID identifying a Light LC Property

struct **esp_ble_mesh_light_lc_property_set_t**

Parameters of Light LC Property Set

Public Members

uint16_t **property_id**

Property ID identifying a Light LC Property

struct net_buf_simple ***property_value**

Raw value for the Light LC Property

struct **esp_ble_mesh_light_lightness_status_cb_t**

Bluetooth Mesh Light Lightness Client Model Get and Set callback parameters structure.

Parameters of Light Lightness Status

Public Members

bool **op_en**

Indicate if optional parameters are included

uint16_t **present_lightness**

Current value of light lightness actual state

uint16_t **target_lightness**

Target value of light lightness actual state (optional)

uint8_t **remain_time**

Time to complete state transition (C.1)

struct **esp_ble_mesh_light_lightness_linear_status_cb_t**

Parameters of Light Lightness Linear Status

Public Members

bool **op_en**

Indicate if optional parameters are included

uint16_t **present_lightness**

Current value of light lightness linear state

uint16_t **target_lightness**

Target value of light lightness linear state (optional)

uint8_t **remain_time**

Time to complete state transition (C.1)

struct **esp_ble_mesh_light_lightness_last_status_cb_t**

Parameter of Light Lightness Last Status

Public Members

uint16_t **lightness**

The value of the Light Lightness Last state

struct **esp_ble_mesh_light_lightness_default_status_cb_t**

Parameter of Light Lightness Default Status

Public Members

uint16_t **lightness**

The value of the Light Lightness default State

struct **esp_ble_mesh_light_lightness_range_status_cb_t**

Parameters of Light Lightness Range Status

Public Members

uint8_t **status_code**

Status Code for the request message

uint16_t **range_min**

Value of range min field of light lightness range state

uint16_t **range_max**

Value of range max field of light lightness range state

struct **esp_ble_mesh_light_ctl_status_cb_t**

Parameters of Light CTL Status

Public Members

bool **op_en**

Indicate if optional parameters are included

uint16_t **present_ctl_lightness**

Current value of light ctl lightness state

uint16_t **present_ctl_temperature**

Current value of light ctl temperature state

uint16_t **target_ctl_lightness**

Target value of light ctl lightness state (optional)

uint16_t **target_ctl_temperature**

Target value of light ctl temperature state (C.1)

uint8_t **remain_time**

Time to complete state transition (C.1)

struct **esp_ble_mesh_light_ctl_temperature_status_cb_t**

Parameters of Light CTL Temperature Status

Public Members

bool **op_en**

Indicate if optional parameters are included

uint16_t **present_ctl_temperature**

Current value of light ctl temperature state

uint16_t **present_ctl_delta_uv**

Current value of light ctl delta UV state

uint16_t **target_ctl_temperature**

Target value of light ctl temperature state (optional)

uint16_t **target_ctl_delta_uv**

Target value of light ctl delta UV state (C.1)

uint8_t **remain_time**

Time to complete state transition (C.1)

struct **esp_ble_mesh_light_ctl_temperature_range_status_cb_t**

Parameters of Light CTL Temperature Range Status

Public Members

uint8_t **status_code**

Status code for the request message

uint16_t **range_min**

Value of temperature range min field of light ctl temperature range state

uint16_t **range_max**

Value of temperature range max field of light ctl temperature range state

struct **esp_ble_mesh_light_ctl_default_status_cb_t**

Parameters of Light CTL Default Status

Public Members

uint16_t **lightness**

Value of light lightness default state

uint16_t **temperature**

Value of light temperature default state

int16_t **delta_uv**

Value of light delta UV default state

struct **esp_ble_mesh_light_hsl_status_cb_t**

Parameters of Light HSL Status

Public Members

bool **op_en**

Indicate if optional parameters are included

uint16_t **hsl_lightness**

Current value of light hsl lightness state

uint16_t **hsl_hue**

Current value of light hsl hue state

uint16_t **hsl_saturation**

Current value of light hsl saturation state

uint8_t **remain_time**

Time to complete state transition (optional)

struct **esp_ble_mesh_light_hsl_target_status_cb_t**

Parameters of Light HSL Target Status

Public Members

bool **op_en**

Indicate if optional parameters are included

uint16_t **hsl_lightness_target**

Target value of light hsl lightness state

uint16_t **hsl_hue_target**

Target value of light hsl hue state

uint16_t **hsl_saturation_target**

Target value of light hsl saturation state

uint8_t **remain_time**

Time to complete state transition (optional)

struct **esp_ble_mesh_light_hsl_hue_status_cb_t**

Parameters of Light HSL Hue Status

Public Members

bool **op_en**

Indicate if optional parameters are included

uint16_t **present_hue**

Current value of light hsl hue state

uint16_t **target_hue**

Target value of light hsl hue state (optional)

uint8_t **remain_time**

Time to complete state transition (C.1)

struct **esp_ble_mesh_light_hsl_saturation_status_cb_t**

Parameters of Light HSL Saturation Status

Public Members

bool **op_en**

Indicate if optional parameters are included

uint16_t **present_saturation**

Current value of light hsl saturation state

uint16_t **target_saturation**

Target value of light hsl saturation state (optional)

uint8_t **remain_time**

Time to complete state transition (C.1)

struct **esp_ble_mesh_light_hsl_default_status_cb_t**

Parameters of Light HSL Default Status

Public Members

uint16_t **lightness**

Value of light lightness default state

uint16_t **hue**

Value of light hue default state

uint16_t **saturation**

Value of light saturation default state

struct **esp_ble_mesh_light_hsl_range_status_cb_t**

Parameters of Light HSL Range Status

Public Members

uint8_t **status_code**

Status code for the request message

uint16_t **hue_range_min**

Value of hue range min field of light hsl hue range state

uint16_t **hue_range_max**

Value of hue range max field of light hsl hue range state

uint16_t **saturation_range_min**

Value of saturation range min field of light hsl saturation range state

uint16_t **saturation_range_max**

Value of saturation range max field of light hsl saturation range state

struct **esp_ble_mesh_light_xyl_status_cb_t**

Parameters of Light xyL Status

Public Members

bool **op_en**

Indicate whether optional parameters included

uint16_t **xyl_lightness**

The present value of the Light xyL Lightness state

uint16_t **xyl_x**

The present value of the Light xyL x state

uint16_t **xyl_y**

The present value of the Light xyL y state

uint8_t **remain_time**

Time to complete state transition (optional)

struct **esp_ble_mesh_light_xyl_target_status_cb_t**

Parameters of Light xyL Target Status

Public Members

bool **op_en**

Indicate whether optional parameters included

uint16_t **target_xyl_lightness**

The target value of the Light xyL Lightness state

uint16_t **target_xyl_x**

The target value of the Light xyL x state

uint16_t **target_xyl_y**

The target value of the Light xyL y state

uint8_t **remain_time**

Time to complete state transition (optional)

struct **esp_ble_mesh_light_xyl_default_status_cb_t**

Parameters of Light xyL Default Status

Public Members

uint16_t **lightness**

The value of the Light Lightness Default state

uint16_t **xyl_x**

The value of the Light xyL x Default state

uint16_t **xyl_y**

The value of the Light xyL y Default state

struct **esp_ble_mesh_light_xyl_range_status_cb_t**

Parameters of Light xyL Range Status

Public Members

uint8_t **status_code**

Status Code for the requesting message

uint16_t **xyl_x_range_min**

The value of the xyL x Range Min field of the Light xyL x Range state

uint16_t **xyl_x_range_max**

The value of the xyL x Range Max field of the Light xyL x Range state

uint16_t **xyl_y_range_min**

The value of the xyL y Range Min field of the Light xyL y Range state

uint16_t **xyl_y_range_max**

The value of the xyL y Range Max field of the Light xyL y Range state

struct **esp_ble_mesh_light_lc_mode_status_cb_t**

Parameter of Light LC Mode Status

Public Members

uint8_t **mode**

The present value of the Light LC Mode state

struct **esp_ble_mesh_light_lc_om_status_cb_t**

Parameter of Light LC OM Status

Public Members

uint8_t **mode**

The present value of the Light LC Occupancy Mode state

struct **esp_ble_mesh_light_lc_light_onoff_status_cb_t**

Parameters of Light LC Light OnOff Status

Public Members

bool **op_en**

Indicate whether optional parameters included

uint8_t **present_light_onoff**

The present value of the Light LC Light OnOff state

uint8_t **target_light_onoff**

The target value of the Light LC Light OnOff state (Optional)

uint8_t **remain_time**

Time to complete state transition (C.1)

struct **esp_ble_mesh_light_lc_property_status_cb_t**

Parameters of Light LC Property Status

Public Members

uint16_t **property_id**

Property ID identifying a Light LC Property

struct net_buf_simple ***property_value**

Raw value for the Light LC Property

struct **esp_ble_mesh_light_client_cb_param_t**

Lighting Client Model callback parameters

Public Members

int **error_code**

Appropriate error code

esp_ble_mesh_client_common_param_t ***params**

The client common parameters.

esp_ble_mesh_light_client_status_cb_t **status_cb**

The light status message callback values

struct **esp_ble_mesh_light_lightness_state_t**

Parameters of Light Lightness state

Public Members

uint16_t **lightness_linear**

The present value of Light Lightness Linear state

uint16_t **target_lightness_linear**

The target value of Light Lightness Linear state

uint16_t **lightness_actual**

The present value of Light Lightness Actual state

uint16_t **target_lightness_actual**

The target value of Light Lightness Actual state

uint16_t **lightness_last**

The value of Light Lightness Last state

uint16_t **lightness_default**

The value of Light Lightness Default state

uint8_t **status_code**

The status code of setting Light Lightness Range state

uint16_t **lightness_range_min**

The minimum value of Light Lightness Range state

uint16_t **lightness_range_max**

The maximum value of Light Lightness Range state

struct **esp_ble_mesh_light_lightness_srv_t**

User data of Light Lightness Server Model

Public Members

esp_ble_mesh_model_t ***model**

Pointer to the Lighting Lightness Server Model. Initialized internally.

esp_ble_mesh_server_rsp_ctrl_t **rsp_ctrl**

Response control of the server model received messages

esp_ble_mesh_light_lightness_state_t ***state**

Parameters of the Light Lightness state

esp_ble_mesh_last_msg_info_t **last**

Parameters of the last received set message

esp_ble_mesh_state_transition_t **actual_transition**

Parameters of state transition

esp_ble_mesh_state_transition_t **linear_transition**

Parameters of state transition

int32_t **tt_delta_lightness_actual**

Delta change value of lightness actual state transition

int32_t **tt_delta_lightness_linear**

Delta change value of lightness linear state transition

struct **esp_ble_mesh_light_lightness_setup_srv_t**

User data of Light Lightness Setup Server Model

Public Members

esp_ble_mesh_model_t ***model**

Pointer to the Lighting Lightness Setup Server Model. Initialized internally.

esp_ble_mesh_server_rsp_ctrl_t **rsp_ctrl**

Response control of the server model received messages

esp_ble_mesh_light_lightness_state_t ***state**

Parameters of the Light Lightness state

struct **esp_ble_mesh_light_ctl_state_t**

Parameters of Light CTL state

Public Members

uint16_t **lightness**

The present value of Light CTL Lightness state

uint16_t **target_lightness**

The target value of Light CTL Lightness state

uint16_t **temperature**

The present value of Light CTL Temperature state

uint16_t **target_temperature**

The target value of Light CTL Temperature state

int16_t **delta_uv**

The present value of Light CTL Delta UV state

int16_t **target_delta_uv**

The target value of Light CTL Delta UV state

uint8_t **status_code**

The statue code of setting Light CTL Temperature Range state

uint16_t **temperature_range_min**

The minimum value of Light CTL Temperature Range state

uint16_t **temperature_range_max**

The maximum value of Light CTL Temperature Range state

uint16_t **lightness_default**

The value of Light Lightness Default state

uint16_t **temperature_default**

The value of Light CTL Temperature Default state

int16_t **delta_uv_default**

The value of Light CTL Delta UV Default state

struct **esp_ble_mesh_light_ctl_srv_t**

User data of Light CTL Server Model

Public Members

esp_ble_mesh_model_t ***model**

Pointer to the Lighting CTL Server Model. Initialized internally.

esp_ble_mesh_server_rsp_ctrl_t **rsp_ctrl**

Response control of the server model received messages

esp_ble_mesh_light_ctl_state_t ***state**

Parameters of the Light CTL state

esp_ble_mesh_last_msg_info_t **last**

Parameters of the last received set message

esp_ble_mesh_state_transition_t **transition**

Parameters of state transition

int32_t **tt_delta_lightness**

Delta change value of lightness state transition

int32_t **tt_delta_temperature**

Delta change value of temperature state transition

int32_t **tt_delta_delta_uv**

Delta change value of delta uv state transition

struct **esp_ble_mesh_light_ctl_setup_srv_t**

User data of Light CTL Setup Server Model

Public Members

esp_ble_mesh_model_t ***model**

Pointer to the Lighting CTL Setup Server Model. Initialized internally.

esp_ble_mesh_server_rsp_ctrl_t **rsp_ctrl**

Response control of the server model received messages

esp_ble_mesh_light_ctl_state_t ***state**

Parameters of the Light CTL state

struct **esp_ble_mesh_light_ctl_temp_srv_t**

User data of Light CTL Temperature Server Model

Public Members

esp_ble_mesh_model_t ***model**

Pointer to the Lighting CTL Temperature Server Model. Initialized internally.

esp_ble_mesh_server_rsp_ctrl_t **rsp_ctrl**

Response control of the server model received messages

esp_ble_mesh_light_ctl_state_t ***state**

Parameters of the Light CTL state

esp_ble_mesh_last_msg_info_t **last**

Parameters of the last received set message

esp_ble_mesh_state_transition_t **transition**

Parameters of state transition

int32_t **tt_delta_temperature**

Delta change value of temperature state transition

int32_t **tt_delta_delta_uv**

Delta change value of delta uv state transition

struct **esp_ble_mesh_light_hsl_state_t**

Parameters of Light HSL state

Public Members

uint16_t **lightness**

The present value of Light HSL Lightness state

uint16_t **target_lightness**

The target value of Light HSL Lightness state

uint16_t **hue**

The present value of Light HSL Hue state

uint16_t **target_hue**

The target value of Light HSL Hue state

uint16_t **saturation**

The present value of Light HSL Saturation state

uint16_t **target_saturation**

The target value of Light HSL Saturation state

uint16_t **lightness_default**

The value of Light Lightness Default state

uint16_t **hue_default**

The value of Light HSL Hue Default state

uint16_t **saturation_default**

The value of Light HSL Saturation Default state

uint8_t **status_code**

The status code of setting Light HSL Hue & Saturation Range state

uint16_t **hue_range_min**

The minimum value of Light HSL Hue Range state

uint16_t **hue_range_max**

The maximum value of Light HSL Hue Range state

uint16_t **saturation_range_min**

The minimum value of Light HSL Saturation state

uint16_t **saturation_range_max**

The maximum value of Light HSL Saturation state

struct **esp_ble_mesh_light_hsl_srv_t**

User data of Light HSL Server Model

Public Members

esp_ble_mesh_model_t ***model**

Pointer to the Lighting HSL Server Model. Initialized internally.

esp_ble_mesh_server_rsp_ctrl_t **rsp_ctrl**

Response control of the server model received messages

esp_ble_mesh_light_hsl_state_t ***state**

Parameters of the Light HSL state

esp_ble_mesh_last_msg_info_t **last**

Parameters of the last received set message

esp_ble_mesh_state_transition_t **transition**

Parameters of state transition

int32_t **tt_delta_lightness**

Delta change value of lightness state transition

int32_t **tt_delta_hue**

Delta change value of hue state transition

int32_t **tt_delta_saturation**

Delta change value of saturation state transition

struct **esp_ble_mesh_light_hsl_setup_srv_t**

User data of Light HSL Setup Server Model

Public Members

esp_ble_mesh_model_t ***model**

Pointer to the Lighting HSL Setup Server Model. Initialized internally.

esp_ble_mesh_server_rsp_ctrl_t **rsp_ctrl**

Response control of the server model received messages

esp_ble_mesh_light_hsl_state_t ***state**

Parameters of the Light HSL state

struct **esp_ble_mesh_light_hsl_hue_srv_t**

User data of Light HSL Hue Server Model

Public Members

esp_ble_mesh_model_t ***model**

Pointer to the Lighting HSL Hue Server Model. Initialized internally.

esp_ble_mesh_server_rsp_ctrl_t **rsp_ctrl**

Response control of the server model received messages

esp_ble_mesh_light_hsl_state_t ***state**

Parameters of the Light HSL state

esp_ble_mesh_last_msg_info_t **last**

Parameters of the last received set message

esp_ble_mesh_state_transition_t **transition**

Parameters of state transition

int32_t **tt_delta_hue**

Delta change value of hue state transition

struct **esp_ble_mesh_light_hsl_sat_srv_t**

User data of Light HSL Saturation Server Model

Public Members

esp_ble_mesh_model_t ***model**

Pointer to the Lighting HSL Saturation Server Model. Initialized internally.

esp_ble_mesh_server_rsp_ctrl_t **rsp_ctrl**

Response control of the server model received messages

esp_ble_mesh_light_hsl_state_t ***state**

Parameters of the Light HSL state

esp_ble_mesh_last_msg_info_t **last**

Parameters of the last received set message

esp_ble_mesh_state_transition_t **transition**

Parameters of state transition

int32_t **tt_delta_saturation**

Delta change value of saturation state transition

struct **esp_ble_mesh_light_xyl_state_t**

Parameters of Light xyL state

Public Members

uint16_t **lightness**

The present value of Light xyL Lightness state

uint16_t **target_lightness**

The target value of Light xyL Lightness state

uint16_t **x**

The present value of Light xyL x state

uint16_t **target_x**

The target value of Light xyL x state

uint16_t **y**

The present value of Light xyL y state

uint16_t **target_y**

The target value of Light xyL y state

uint16_t **lightness_default**

The value of Light Lightness Default state

uint16_t **x_default**

The value of Light xyL x Default state

uint16_t **y_default**

The value of Light xyL y Default state

uint8_t **status_code**

The status code of setting Light xyL x & y Range state

uint16_t **x_range_min**

The minimum value of Light xyL x Range state

uint16_t **x_range_max**

The maximum value of Light xyL x Range state

uint16_t **y_range_min**

The minimum value of Light xyL y Range state

uint16_t **y_range_max**

The maximum value of Light xyL y Range state

struct **esp_ble_mesh_light_xyl_srv_t**

User data of Light xyL Server Model

Public Members

esp_ble_mesh_model_t ***model**

Pointer to the Lighting xyL Server Model. Initialized internally.

esp_ble_mesh_server_rsp_ctrl_t **rsp_ctrl**

Response control of the server model received messages

esp_ble_mesh_light_xyl_state_t ***state**

Parameters of the Light xyL state

esp_ble_mesh_last_msg_info_t **last**

Parameters of the last received set message

esp_ble_mesh_state_transition_t **transition**

Parameters of state transition

int32_t **tt_delta_lightness**

Delta change value of lightness state transition

int32_t **tt_delta_x**

Delta change value of x state transition

int32_t **tt_delta_y**

Delta change value of y state transition

struct **esp_ble_mesh_light_xyl_setup_srv_t**

User data of Light xyL Setup Server Model

Public Members

esp_ble_mesh_model_t ***model**

Pointer to the Lighting xyL Setup Server Model. Initialized internally.

esp_ble_mesh_server_rsp_ctrl_t **rsp_ctrl**

Response control of the server model received messages

esp_ble_mesh_light_xyl_state_t ***state**

Parameters of the Light xyL state

struct **esp_ble_mesh_light_lc_state_t**

Parameters of Light LC states

Public Members

uint32_t **mode**

0b0 The controller is turned off.

- The binding with the Light Lightness state is disabled. 0b1 The controller is turned on.
- The binding with the Light Lightness state is enabled.The value of Light LC Mode state

uint32_t **occupancy_mode**

The value of Light LC Occupancy Mode state

uint32_t **light_onoff**

The present value of Light LC Light OnOff state

uint32_t **target_light_onoff**

The target value of Light LC Light OnOff state

uint32_t **occupancy**

The value of Light LC Occupancy state

uint32_t **ambient_luxlevel**

The value of Light LC Ambient LuxLevel state

uint16_t **linear_output**

i. Light LC Linear Output = max((Lightness Out)^2/65535, Regulator Output)
ii. If the Light LC Mode state is set to 0b1, the binding is enabled and upon a change of the Light LC Linear Output state, the following operation shall be performed: Light Lightness Linear = Light LC Linear Output
iii. If the Light LC Mode state is set to 0b0, the binding is disabled (i.e., upon a change of the Light LC Linear Output state, no operation on the Light Lightness Linear state is performed).The value of Light LC Linear Output state

struct **esp_ble_mesh_light_lc_property_state_t**

Parameters of Light Property states. The Light LC Property states are read / write states that determine the configuration of a Light Lightness Controller. Each state is represented by a device property and is controlled by Light LC Property messages.

Public Members

uint32_t **time_occupancy_delay**

A timing state that determines the delay for changing the Light LC Occupancy state upon receiving a Sensor Status message from an occupancy sensor.The value of Light LC Time Occupancy Delay state

uint32_t **time_fade_on**

A timing state that determines the time the controlled lights fade to the level determined by the Light LC Lightness On state.The value of Light LC Time Fade On state

uint32_t **time_run_on**

A timing state that determines the time the controlled lights stay at the level determined by the Light LC Lightness On state.The value of Light LC Time Run On state

uint32_t **time_fade**

A timing state that determines the time the controlled lights fade from the level determined by the Light LC Lightness On state to the level determined by the Light Lightness Prolong state.The value of Light LC Time Fade state

uint32_t **time_prolong**

A timing state that determines the time the controlled lights stay at the level determined by the Light LC Lightness Prolong state.The value of Light LC Time Prolong state

uint32_t **time_fade_standby_auto**

A timing state that determines the time the controlled lights fade from the level determined by the Light LC Lightness Prolong state to the level determined by the Light LC Lightness Standby state when the transition is automatic.The value of Light LC Time Fade Standby Auto state

uint32_t **time_fade_standby_manual**

A timing state that determines the time the controlled lights fade from the level determined by the Light LC Lightness Prolong state to the level determined by the Light LC Lightness Standby state when the transition is triggered by a change in the Light LC Light OnOff state.The value of Light LC Time Fade Standby Manual state

uint16_t **lightness_on**

A lightness state that determines the perceptive light lightness at the Occupancy and Run internal controller states.The value of Light LC Lightness On state

uint16_t **lightness_prolong**

A lightness state that determines the light lightness at the Prolong internal controller state.The value of Light LC Lightness Prolong state

uint16_t **lightness_standby**

A lightness state that determines the light lightness at the Standby internal controller state.The value of Light LC Lightness Standby state

uint16_t **ambient_luxlevel_on**

A uint16 state representing the Ambient LuxLevel level that determines if the controller transitions from the Light Control Standby state.The value of Light LC Ambient LuxLevel On state

uint16_t **ambient_luxlevel_prolong**

A uint16 state representing the required Ambient LuxLevel level in the Prolong state.The value of Light LC Ambient LuxLevel Prolong state

uint16_t **ambient_luxlevel_standby**

A uint16 state representing the required Ambient LuxLevel level in the Standby state.The value of Light LC Ambient LuxLevel Standby state

float **regulator_kiu**

A float32 state representing the integral coefficient that determines the integral part of the equation defining the output of the Light LC PI Feedback Regulator, when Light LC Ambient LuxLevel is less than LuxLevel Out. Valid range: 0.0 ~ 1000.0. The default value is 250.0.The value of Light LC Regulator Kiu state

float **regulator_kid**

A float32 state representing the integral coefficient that determines the integral part of the equation defining the output of the Light LC PI Feedback Regulator, when Light LC Ambient LuxLevel is greater than or equal to the value of the LuxLevel Out state. Valid range: 0.0 ~ 1000.0. The default value is 25.0.The value of Light LC Regulator Kid state

float **regulator_kpu**

A float32 state representing the proportional coefficient that determines the proportional part of the equation defining the output of the Light LC PI Feedback Regulator, when Light LC Ambient LuxLevel is less than the value of the LuxLevel Out state. Valid range: 0.0 ~ 1000.0. The default value is 80.0.The value of Light LC Regulator Kpu state

float **regulator_kpd**

A float32 state representing the proportional coefficient that determines the proportional part of the equation defining the output of the Light LC PI Feedback Regulator, when Light LC Ambient LuxLevel is greater than or equal to the value of the LuxLevel Out state. Valid range: 0.0 ~ 1000.0. The default value is 80.0.The value of Light LC Regulator Kpd state

int8_t **regulator_accuracy**

A int8 state representing the percentage accuracy of the Light LC PI Feedback Regulator. Valid range: 0.0 ~ 100.0. The default value is 2.0.The value of Light LC Regulator Accuracy state

uint32_t **set_occupancy_to_1_delay**

If the message Raw field contains a Raw Value for the Time Since Motion Sensed device property, which represents a value less than or equal to the value of the Light LC Occupancy Delay state, it shall delay setting the Light LC Occupancy state to 0b1 by the difference between the value of the Light LC Occupancy Delay state and the received Time Since Motion value. The value of the difference between value of the Light LC Occupancy Delay state and the received Time Since Motion value

struct **esp_ble_mesh_light_lc_state_machine_t**

Parameters of Light LC state machine

Public Members

uint8_t **fade_on**

The value of transition time of Light LC Time Fade On

uint8_t **fade**

The value of transition time of Light LC Time Fade

uint8_t **fade_standby_auto**

The value of transition time of Light LC Time Fade Standby Auto

uint8_t **fade_standby_manual**

The value of transition time of Light LC Time Fade Standby Manual

struct *esp_ble_mesh_light_lc_state_machine_t*::[anonymous] **trans_time**

The Fade On, Fade, Fade Standby Auto, and Fade Standby Manual states are transition states that define the transition of the Lightness Out and LuxLevel Out states. This transition can be started as a result of the Light LC State Machine change or as a result of receiving the Light LC Light OnOff Set or Light LC Light Set Unacknowledged message.The value of transition time

esp_ble_mesh_lc_state_t **state**

The value of Light LC state machine state

struct k_delayed_work **timer**

Timer of Light LC state machine

struct **esp_ble_mesh_light_control_t**

Parameters of Light Lightness controller

Public Members

esp_ble_mesh_light_lc_state_t **state**

Parameters of Light LC state

esp_ble_mesh_light_lc_property_state_t **prop_state**

Parameters of Light LC Property state

esp_ble_mesh_light_lc_state_machine_t **state_machine**

Parameters of Light LC state machine

struct **esp_ble_mesh_light_lc_srv_t**

User data of Light LC Server Model

Public Members

esp_ble_mesh_model_t ***model**

Pointer to the Lighting LC Server Model. Initialized internally.

esp_ble_mesh_server_rsp_ctrl_t **rsp_ctrl**

Response control of the server model received messages

esp_ble_mesh_light_control_t ***lc**

Parameters of the Light controller

esp_ble_mesh_last_msg_info_t **last**

Parameters of the last received set message

esp_ble_mesh_state_transition_t **transition**

Parameters of state transition

struct **esp_ble_mesh_light_lc_setup_srv_t**

User data of Light LC Setup Server Model

Public Members

esp_ble_mesh_model_t ***model**

Pointer to the Lighting LC Setup Server Model. Initialized internally.

esp_ble_mesh_server_rsp_ctrl_t **rsp_ctrl**

Response control of the server model received messages

esp_ble_mesh_light_control_t ***lc**

Parameters of the Light controller

struct **esp_ble_mesh_state_change_light_lightness_set_t**

Parameter of Light Lightness Actual state change event

Public Members

uint16_t **lightness**

The value of Light Lightness Actual state

struct **esp_ble_mesh_state_change_light_lightness_linear_set_t**

Parameter of Light Lightness Linear state change event

Public Members

uint16_t **lightness**

The value of Light Lightness Linear state

struct **esp_ble_mesh_state_change_light_lightness_default_set_t**

Parameter of Light Lightness Default state change event

Public Members

uint16_t **lightness**

The value of Light Lightness Default state

struct **esp_ble_mesh_state_change_light_lightness_range_set_t**

Parameters of Light Lightness Range state change event

Public Members

uint16_t **range_min**

The minimum value of Light Lightness Range state

uint16_t **range_max**

The maximum value of Light Lightness Range state

struct **esp_ble_mesh_state_change_light_ctl_set_t**

Parameters of Light CTL state change event

Public Members

uint16_t **lightness**

The value of Light CTL Lightness state

uint16_t **temperature**

The value of Light CTL Temperature state

int16_t **delta_uv**

The value of Light CTL Delta UV state

struct **esp_ble_mesh_state_change_light_ctl_temperature_set_t**

Parameters of Light CTL Temperature state change event

Public Members

uint16_t **temperature**

The value of Light CTL Temperature state

int16_t **delta_uv**

The value of Light CTL Delta UV state

struct **esp_ble_mesh_state_change_light_ctl_temperature_range_set_t**

Parameters of Light CTL Temperature Range state change event

Public Members

uint16_t **range_min**

The minimum value of Light CTL Temperature Range state

uint16_t **range_max**

The maximum value of Light CTL Temperature Range state

struct **esp_ble_mesh_state_change_light_ctl_default_set_t**

Parameters of Light CTL Default state change event

Public Members

uint16_t **lightness**

The value of Light Lightness Default state

uint16_t **temperature**

The value of Light CTL Temperature Default state

int16_t **delta_uv**

The value of Light CTL Delta UV Default state

struct **esp_ble_mesh_state_change_light_hsl_set_t**

Parameters of Light HSL state change event

Public Members

uint16_t **lightness**

The value of Light HSL Lightness state

uint16_t **hue**

The value of Light HSL Hue state

uint16_t **saturation**

The value of Light HSL Saturation state

struct **esp_ble_mesh_state_change_light_hsl_hue_set_t**

Parameter of Light HSL Hue state change event

Public Members

uint16_t **hue**

The value of Light HSL Hue state

struct **esp_ble_mesh_state_change_light_hsl_saturation_set_t**

Parameter of Light HSL Saturation state change event

Public Members

uint16_t **saturation**

The value of Light HSL Saturation state

struct **esp_ble_mesh_state_change_light_hsl_default_set_t**

Parameters of Light HSL Default state change event

Public Members

uint16_t **lightness**

The value of Light HSL Lightness Default state

uint16_t **hue**

The value of Light HSL Hue Default state

uint16_t **saturation**

The value of Light HSL Saturation Default state

struct **esp_ble_mesh_state_change_light_hsl_range_set_t**

Parameters of Light HSL Range state change event

Public Members

uint16_t **hue_range_min**

The minimum hue value of Light HSL Range state

uint16_t **hue_range_max**

The maximum hue value of Light HSL Range state

uint16_t **saturation_range_min**

The minimum saturation value of Light HSL Range state

uint16_t **saturation_range_max**

The maximum saturation value of Light HSL Range state

struct **esp_ble_mesh_state_change_light_xyl_set_t**

Parameters of Light xyL state change event

Public Members

uint16_t **lightness**

The value of Light xyL Lightness state

uint16_t **x**

The value of Light xyL x state

uint16_t **y**

The value of Light xyL y state

struct **esp_ble_mesh_state_change_light_xyl_default_set_t**

Parameters of Light xyL Default state change event

Public Members

uint16_t **lightness**

The value of Light Lightness Default state

uint16_t **x**

The value of Light xyL x Default state

uint16_t **y**

The value of Light xyL y Default state

struct **esp_ble_mesh_state_change_light_xyl_range_set_t**

Parameters of Light xyL Range state change event

Public Members

uint16_t **x_range_min**

The minimum value of Light xyL x Range state

uint16_t **x_range_max**

The maximum value of Light xyL x Range state

uint16_t **y_range_min**

The minimum value of Light xyL y Range state

uint16_t **y_range_max**

The maximum value of Light xyL y Range state

struct **esp_ble_mesh_state_change_light_lc_mode_set_t**

Parameter of Light LC Mode state change event

Public Members

uint8_t **mode**

The value of Light LC Mode state

struct **esp_ble_mesh_state_change_light_lc_om_set_t**

Parameter of Light LC Occupancy Mode state change event

Public Members

uint8_t **mode**

The value of Light LC Occupancy Mode state

struct **esp_ble_mesh_state_change_light_lc_light_onoff_set_t**

Parameter of Light LC Light OnOff state change event

Public Members

uint8_t **onoff**

The value of Light LC Light OnOff state

struct **esp_ble_mesh_state_change_light_lc_property_set_t**

Parameters of Light LC Property state change event

Public Members

uint16_t **property_id**

The property id of Light LC Property state

struct net_buf_simple ***property_value**

The property value of Light LC Property state

struct **esp_ble_mesh_state_change_sensor_status_t**

Parameters of Sensor Status state change event

Public Members

uint16_t **property_id**

The value of Sensor Property ID

uint8_t **occupancy**

The value of Light LC Occupancy state

uint32_t **set_occupancy_to_1_delay**

The value of Light LC Set Occupancy to 1 Delay state

uint32_t **ambient_luxlevel**

The value of Light LC Ambient Luxlevel state

union *esp_ble_mesh_state_change_sensor_status_t*::[anonymous] **state**

Parameters of Sensor Status related state

struct **esp_ble_mesh_server_recv_light_lc_property_get_t**

Context of the received Light LC Property Get message

Public Members

uint16_t **property_id**

Property ID identifying a Light LC Property

struct **esp_ble_mesh_server_recv_light_lightness_set_t**

Context of the received Light Lightness Set message

Public Members

bool **op_en**

Indicate if optional parameters are included

uint16_t **lightness**

Target value of light lightness actual state

uint8_t **tid**

Transaction ID

uint8_t **trans_time**

Time to complete state transition (optional)

uint8_t **delay**

Indicate message execution delay (C.1)

struct **esp_ble_mesh_server_recv_light_lightness_linear_set_t**

Context of the received Light Lightness Linear Set message

Public Members

bool **op_en**

Indicate if optional parameters are included

uint16_t **lightness**

Target value of light lightness linear state

uint8_t **tid**

Transaction ID

uint8_t **trans_time**

Time to complete state transition (optional)

uint8_t **delay**

Indicate message execution delay (C.1)

struct **esp_ble_mesh_server_recv_light_lightness_default_set_t**

Context of the received Light Lightness Default Set message

Public Members

uint16_t **lightness**

The value of the Light Lightness Default state

struct **esp_ble_mesh_server_recv_light_lightness_range_set_t**

Context of the received Light Lightness Range Set message

Public Members

uint16_t **range_min**

Value of range min field of light lightness range state

uint16_t **range_max**

Value of range max field of light lightness range state

struct **esp_ble_mesh_server_recv_light_ctl_set_t**

Context of the received Light CTL Set message

Public Members

bool **op_en**

Indicate if optional parameters are included

uint16_t **lightness**

Target value of light ctl lightness state

uint16_t **temperature**

Target value of light ctl temperature state

int16_t **delta_uv**

Target value of light ctl delta UV state

uint8_t **tid**

Transaction ID

uint8_t **trans_time**

Time to complete state transition (optional)

uint8_t **delay**

Indicate message execution delay (C.1)

struct **esp_ble_mesh_server_recv_light_ctl_temperature_set_t**

Context of the received Light CTL Temperature Set message

Public Members

bool **op_en**

Indicate if optional parameters are included

uint16_t **temperature**

Target value of light ctl temperature state

int16_t **delta_uv**

Target value of light ctl delta UV state

uint8_t **tid**

Transaction ID

uint8_t **trans_time**

Time to complete state transition (optional)

uint8_t **delay**

Indicate message execution delay (C.1)

struct **esp_ble_mesh_server_recv_light_ctl_temperature_range_set_t**

Context of the received Light CTL Temperature Range Set message

Public Members

uint16_t **range_min**

Value of temperature range min field of light ctl temperature range state

uint16_t **range_max**

Value of temperature range max field of light ctl temperature range state

struct **esp_ble_mesh_server_recv_light_ctl_default_set_t**

Context of the received Light CTL Default Set message

Public Members

uint16_t **lightness**

Value of light lightness default state

uint16_t **temperature**

Value of light temperature default state

int16_t **delta_uv**

Value of light delta UV default state

struct **esp_ble_mesh_server_recv_light_hsl_set_t**

Context of the received Light HSL Set message

Public Members

bool **op_en**

Indicate if optional parameters are included

uint16_t **lightness**

Target value of light hsl lightness state

uint16_t **hue**

Target value of light hsl hue state

uint16_t **saturation**

Target value of light hsl saturation state

uint8_t **tid**

Transaction ID

uint8_t **trans_time**

Time to complete state transition (optional)

uint8_t **delay**

Indicate message execution delay (C.1)

struct **esp_ble_mesh_server_recv_light_hsl_hue_set_t**

Context of the received Light HSL Hue Set message

Public Members

bool **op_en**

Indicate if optional parameters are included

uint16_t **hue**

Target value of light hsl hue state

uint8_t **tid**

Transaction ID

uint8_t **trans_time**

Time to complete state transition (optional)

uint8_t **delay**

Indicate message execution delay (C.1)

struct **esp_ble_mesh_server_recv_light_hsl_saturation_set_t**

Context of the received Light HSL Saturation Set message

Public Members

bool **op_en**

Indicate if optional parameters are included

uint16_t **saturation**

Target value of light hsl hue state

uint8_t **tid**

Transaction ID

uint8_t **trans_time**

Time to complete state transition (optional)

uint8_t **delay**

Indicate message execution delay (C.1)

struct **esp_ble_mesh_server_recv_light_hsl_default_set_t**

Context of the received Light HSL Default Set message

Public Members

uint16_t **lightness**

Value of light lightness default state

uint16_t **hue**

Value of light hue default state

uint16_t **saturation**

Value of light saturation default state

struct **esp_ble_mesh_server_recv_light_hsl_range_set_t**

Context of the received Light HSL Range Set message

Public Members

uint16_t **hue_range_min**

Value of hue range min field of light hsl hue range state

uint16_t **hue_range_max**

Value of hue range max field of light hsl hue range state

uint16_t **saturation_range_min**

Value of saturation range min field of light hsl saturation range state

uint16_t **saturation_range_max**

Value of saturation range max field of light hsl saturation range state

struct **esp_ble_mesh_server_recv_light_xyl_set_t**

Context of the received Light xyL Set message

Public Members

bool **op_en**

Indicate whether optional parameters included

uint16_t **lightness**

The target value of the Light xyL Lightness state

uint16_t **x**

The target value of the Light xyL x state

uint16_t **y**

The target value of the Light xyL y state

uint8_t **tid**

Transaction Identifier

uint8_t **trans_time**

Time to complete state transition (optional)

uint8_t **delay**

Indicate message execution delay (C.1)

struct **esp_ble_mesh_server_recv_light_xyl_default_set_t**

Context of the received Light xyL Default Set message

Public Members

uint16_t **lightness**

The value of the Light Lightness Default state

uint16_t **x**

The value of the Light xyL x Default state

uint16_t **y**

The value of the Light xyL y Default state

struct **esp_ble_mesh_server_recv_light_xyl_range_set_t**

Context of the received Light xyl Range Set message

Public Members

uint16_t **x_range_min**

The value of the xyL x Range Min field of the Light xyL x Range state

uint16_t **x_range_max**

The value of the xyL x Range Max field of the Light xyL x Range state

uint16_t **y_range_min**

The value of the xyL y Range Min field of the Light xyL y Range state

uint16_t **y_range_max**

The value of the xyL y Range Max field of the Light xyL y Range state

struct **esp_ble_mesh_server_recv_light_lc_mode_set_t**

Context of the received Light LC Mode Set message

Public Members

uint8_t **mode**

The target value of the Light LC Mode state

struct **esp_ble_mesh_server_recv_light_lc_om_set_t**

Context of the received Light OM Set message

Public Members

uint8_t **mode**

The target value of the Light LC Occupancy Mode state

struct **esp_ble_mesh_server_recv_light_lc_light_onoff_set_t**

Context of the received Light LC Light OnOff Set message

Public Members

bool **op_en**

Indicate whether optional parameters included

uint8_t **light_onoff**

The target value of the Light LC Light OnOff state

uint8_t **tid**

Transaction Identifier

uint8_t **trans_time**

Time to complete state transition (optional)

uint8_t **delay**

Indicate message execution delay (C.1)

struct **esp_ble_mesh_server_recv_light_lc_property_set_t**

Context of the received Light LC Property Set message

Public Members

uint16_t **property_id**

Property ID identifying a Light LC Property

struct net_buf_simple ***property_value**

Raw value for the Light LC Property

struct **esp_ble_mesh_server_recv_sensor_status_t**

Context of the received Sensor Status message

Public Members

struct net_buf_simple ***data**

Value of sensor data state (optional)

struct **esp_ble_mesh_lighting_server_cb_param_t**

Lighting Server Model callback parameters

Public Members

esp_ble_mesh_model_t ***model**

Pointer to Lighting Server Models

esp_ble_mesh_msg_ctx_t **ctx**

Context of the received messages

esp_ble_mesh_lighting_server_cb_value_t **value**

Value of the received Lighting Messages

Macros

ESP_BLE_MESH_MODEL_LIGHT_LIGHTNESS_CLI(cli_pub, cli_data)

Define a new Light Lightness Client Model.

Note: This API needs to be called for each element on which the application needs to have a Light Lightness Client Model.

Parameters

- **cli_pub** –Pointer to the unique struct *esp_ble_mesh_model_pub_t*.
- **cli_data** –Pointer to the unique struct *esp_ble_mesh_client_t*.

Returns New Light Lightness Client Model instance.

ESP_BLE_MESH_MODEL_LIGHT_CTL_CLI(cli_pub, cli_data)

Define a new Light CTL Client Model.

Note: This API needs to be called for each element on which the application needs to have a Light CTL Client Model.

Parameters
- **cli_pub** –Pointer to the unique struct *esp_ble_mesh_model_pub_t*.
- **cli_data** –Pointer to the unique struct *esp_ble_mesh_client_t*.

Returns New Light CTL Client Model instance.

ESP_BLE_MESH_MODEL_LIGHT_HSL_CLI(cli_pub, cli_data)

Define a new Light HSL Client Model.

Note: This API needs to be called for each element on which the application needs to have a Light HSL Client Model.

Parameters
- **cli_pub** –Pointer to the unique struct *esp_ble_mesh_model_pub_t*.
- **cli_data** –Pointer to the unique struct *esp_ble_mesh_client_t*.

Returns New Light HSL Client Model instance.

ESP_BLE_MESH_MODEL_LIGHT_XYL_CLI(cli_pub, cli_data)

Define a new Light xyL Client Model.

Note: This API needs to be called for each element on which the application needs to have a Light xyL Client Model.

Parameters
- **cli_pub** –Pointer to the unique struct *esp_ble_mesh_model_pub_t*.
- **cli_data** –Pointer to the unique struct *esp_ble_mesh_client_t*.

Returns New Light xyL Client Model instance.

ESP_BLE_MESH_MODEL_LIGHT_LC_CLI(cli_pub, cli_data)

Define a new Light LC Client Model.

Note: This API needs to be called for each element on which the application needs to have a Light LC Client Model.

Parameters
- **cli_pub** –Pointer to the unique struct *esp_ble_mesh_model_pub_t*.
- **cli_data** –Pointer to the unique struct *esp_ble_mesh_client_t*.

Returns New Light LC Client Model instance.

ESP_BLE_MESH_MODEL_LIGHT_LIGHTNESS_SRV(srv_pub, srv_data)

Lighting Server Models related context.

Define a new Light Lightness Server Model.

Note: 1. The Light Lightness Server model extends the Generic Power OnOff Server model and the Generic Level Server model. When this model is present on an Element, the corresponding Light Lightness Setup Server model shall also be present.

a. This model shall support model publication and model subscription.

Parameters
- **srv_pub** –Pointer to the unique struct *esp_ble_mesh_model_pub_t*.
- **srv_data** –Pointer to the unique struct *esp_ble_mesh_light_lightness_srv_t*.

Returns New Light Lightness Server Model instance.

ESP_BLE_MESH_MODEL_LIGHT_LIGHTNESS_SETUP_SRV(srv_pub, srv_data)

Define a new Light Lightness Setup Server Model.

Note: 1. The Light Lightness Setup Server model extends the Light Lightness Server model and the Generic Power OnOff Setup Server model.

a. This model shall support model subscription.

Parameters

- **srv_pub** –Pointer to the unique struct *esp_ble_mesh_model_pub_t*.
- **srv_data** –Pointer to the unique struct *esp_ble_mesh_light_lightness_setup_srv_t*.

Returns New Light Lightness Setup Server Model instance.

ESP_BLE_MESH_MODEL_LIGHT_CTL_SRV(srv_pub, srv_data)

Define a new Light CTL Server Model.

Note: 1. The Light CTL Server model extends the Light Lightness Server model. When this model is present on an Element, the corresponding Light CTL Temperature Server model and the corresponding Light CTL Setup Server model shall also be present.

a. This model shall support model publication and model subscription.
b. The model requires two elements: the main element and the Temperature element. The Temperature element contains the corresponding Light CTL Temperature Server model and an instance of a Generic Level state bound to the Light CTL Temperature state on the Temperature element. The Light CTL Temperature state on the Temperature element is bound to the Light CTL state on the main element.

Parameters

- **srv_pub** –Pointer to the unique struct *esp_ble_mesh_model_pub_t*.
- **srv_data** –Pointer to the unique struct *esp_ble_mesh_light_ctl_srv_t*.

Returns New Light CTL Server Model instance.

ESP_BLE_MESH_MODEL_LIGHT_CTL_SETUP_SRV(srv_pub, srv_data)

Define a new Light CTL Setup Server Model.

Note: 1. The Light CTL Setup Server model extends the Light CTL Server and the Light Lightness Setup Server.

a. This model shall support model subscription.

Parameters

- **srv_pub** –Pointer to the unique struct *esp_ble_mesh_model_pub_t*.
- **srv_data** –Pointer to the unique struct *esp_ble_mesh_light_ctl_setup_srv_t*.

Returns New Light CTL Setup Server Model instance.

ESP_BLE_MESH_MODEL_LIGHT_CTL_TEMP_SRV(srv_pub, srv_data)

Define a new Light CTL Temperature Server Model.

Note: 1. The Light CTL Temperature Server model extends the Generic Level Server model.

a. This model shall support model publication and model subscription.

Parameters
- **srv_pub** –Pointer to the unique struct *esp_ble_mesh_model_pub_t*.
- **srv_data** –Pointer to the unique struct *esp_ble_mesh_light_ctl_temp_srv_t*.

Returns New Light CTL Temperature Server Model instance.

ESP_BLE_MESH_MODEL_LIGHT_HSL_SRV(srv_pub, srv_data)

Define a new Light HSL Server Model.

Note: 1. The Light HSL Server model extends the Light Lightness Server model. When this model is present on an Element, the corresponding Light HSL Hue Server model and the corresponding Light HSL Saturation Server model and the corresponding Light HSL Setup Server model shall also be present.

a. This model shall support model publication and model subscription.
b. The model requires three elements: the main element and the Hue element and the Saturation element. The Hue element contains the corresponding Light HSL Hue Server model and an instance of a Generic Level state bound to the Light HSL Hue state on the Hue element. The Saturation element contains the corresponding Light HSL Saturation Server model and an instance of a Generic Level state bound to the Light HSL Saturation state on the Saturation element. The Light HSL Hue state on the Hue element is bound to the Light HSL state on the main element and the Light HSL Saturation state on the Saturation element is bound to the Light HSL state on the main element.

Parameters
- **srv_pub** –Pointer to the unique struct *esp_ble_mesh_model_pub_t*.
- **srv_data** –Pointer to the unique struct *esp_ble_mesh_light_hsl_srv_t*.

Returns New Light HSL Server Model instance.

ESP_BLE_MESH_MODEL_LIGHT_HSL_SETUP_SRV(srv_pub, srv_data)

Define a new Light HSL Setup Server Model.

Note: 1. The Light HSL Setup Server model extends the Light HSL Server and the Light Lightness Setup Server.

a. This model shall support model subscription.

Parameters
- **srv_pub** –Pointer to the unique struct *esp_ble_mesh_model_pub_t*.
- **srv_data** –Pointer to the unique struct *esp_ble_mesh_light_hsl_setup_srv_t*.

Returns New Light HSL Setup Server Model instance.

ESP_BLE_MESH_MODEL_LIGHT_HSL_HUE_SRV(srv_pub, srv_data)

Define a new Light HSL Hue Server Model.

Note: 1. The Light HSL Hue Server model extends the Generic Level Server model. This model is associated with the Light HSL Server model.

a. This model shall support model publication and model subscription.

Parameters
- **srv_pub** –Pointer to the unique struct *esp_ble_mesh_model_pub_t*.
- **srv_data** –Pointer to the unique struct *esp_ble_mesh_light_hsl_hue_srv_t*.

Returns New Light HSL Hue Server Model instance.

ESP_BLE_MESH_MODEL_LIGHT_HSL_SAT_SRV(srv_pub, srv_data)

Define a new Light HSL Saturation Server Model.

Note: 1. The Light HSL Saturation Server model extends the Generic Level Server model. This model is associated with the Light HSL Server model.

a. This model shall support model publication and model subscription.

Parameters

- **srv_pub** –Pointer to the unique struct *esp_ble_mesh_model_pub_t*.
- **srv_data** –Pointer to the unique struct *esp_ble_mesh_light_hsl_sat_srv_t*.

Returns New Light HSL Saturation Server Model instance.

ESP_BLE_MESH_MODEL_LIGHT_XYL_SRV(srv_pub, srv_data)

Define a new Light xyL Server Model.

Note: 1. The Light xyL Server model extends the Light Lightness Server model. When this model is present on an Element, the corresponding Light xyL Setup Server model shall also be present.

a. This model shall support model publication and model subscription.

Parameters

- **srv_pub** –Pointer to the unique struct *esp_ble_mesh_model_pub_t*.
- **srv_data** –Pointer to the unique struct *esp_ble_mesh_light_xyl_srv_t*.

Returns New Light xyL Server Model instance.

ESP_BLE_MESH_MODEL_LIGHT_XYL_SETUP_SRV(srv_pub, srv_data)

Define a new Light xyL Setup Server Model.

Note: 1. The Light xyL Setup Server model extends the Light xyL Server and the Light Lightness Setup Server.

a. This model shall support model subscription.

Parameters

- **srv_pub** –Pointer to the unique struct *esp_ble_mesh_model_pub_t*.
- **srv_data** –Pointer to the unique struct *esp_ble_mesh_light_xyl_setup_srv_t*.

Returns New Light xyL Setup Server Model instance.

ESP_BLE_MESH_MODEL_LIGHT_LC_SRV(srv_pub, srv_data)

Define a new Light LC Server Model.

Note: 1. The Light LC (Lightness Control) Server model extends the Light Lightness Server model and the Generic OnOff Server model. When this model is present on an Element, the corresponding Light LC Setup Server model shall also be present.

a. This model shall support model publication and model subscription.
b. This model may be used to represent an element that is a client to a Sensor Server model and controls the Light Lightness Actual state via defined state bindings.

Parameters

- **srv_pub** –Pointer to the unique struct *esp_ble_mesh_model_pub_t*.
- **srv_data** –Pointer to the unique struct *esp_ble_mesh_light_lc_srv_t*.

Returns New Light LC Server Model instance.

ESP_BLE_MESH_MODEL_LIGHT_LC_SETUP_SRV(srv_pub, srv_data)

Define a new Light LC Setup Server Model.

Note: 1. The Light LC (Lightness Control) Setup model extends the Light LC Server model.

a. This model shall support model publication and model subscription.
b. This model may be used to configure setup parameters for the Light LC Server model.

Parameters

- **srv_pub** –Pointer to the unique struct *esp_ble_mesh_model_pub_t*.
- **srv_data** –Pointer to the unique struct *esp_ble_mesh_light_lc_setup_srv_t*.

Returns New Light LC Setup Server Model instance.

Type Definitions

typedef void (***esp_ble_mesh_light_client_cb_t**)(*esp_ble_mesh_light_client_cb_event_t* event, *esp_ble_mesh_light_client_cb_param_t* *param)

Bluetooth Mesh Light Client Model function.

Lighting Client Model callback function type

Param event Event type
Param param Pointer to callback parameter

typedef void (***esp_ble_mesh_lighting_server_cb_t**)(*esp_ble_mesh_lighting_server_cb_event_t* event, *esp_ble_mesh_lighting_server_cb_param_t* *param)

Bluetooth Mesh Lighting Server Model function.

Lighting Server Model callback function type

Param event Event type
Param param Pointer to callback parameter

Enumerations

enum **esp_ble_mesh_light_client_cb_event_t**

This enum value is the event of Lighting Client Model

Values:

enumerator **ESP_BLE_MESH_LIGHT_CLIENT_GET_STATE_EVT**

enumerator **ESP_BLE_MESH_LIGHT_CLIENT_SET_STATE_EVT**

enumerator **ESP_BLE_MESH_LIGHT_CLIENT_PUBLISH_EVT**

enumerator **ESP_BLE_MESH_LIGHT_CLIENT_TIMEOUT_EVT**

enumerator **ESP_BLE_MESH_LIGHT_CLIENT_EVT_MAX**

enum **esp_ble_mesh_lc_state_t**

This enum value is the Light LC State Machine states

Values:

enumerator **ESP_BLE_MESH_LC_OFF**

enumerator **ESP_BLE_MESH_LC_STANDBY**

enumerator **ESP_BLE_MESH_LC_FADE_ON**

enumerator **ESP_BLE_MESH_LC_RUN**

enumerator **ESP_BLE_MESH_LC_FADE**

enumerator **ESP_BLE_MESH_LC_PROLONG**

enumerator **ESP_BLE_MESH_LC_FADE_STANDBY_AUTO**

enumerator **ESP_BLE_MESH_LC_FADE_STANDBY_MANUAL**

enum **esp_ble_mesh_lighting_server_cb_event_t**

This enum value is the event of Lighting Server Model

Values:

enumerator **ESP_BLE_MESH_LIGHTING_SERVER_STATE_CHANGE_EVT**

i. When get_auto_rsp is set to ESP_BLE_MESH_SERVER_AUTO_RSP, no event will be callback to the application layer when Lighting Get messages are received.
ii. When set_auto_rsp is set to ESP_BLE_MESH_SERVER_AUTO_RSP, this event will be callback to the application layer when Lighting Set/Set Unack messages are received.

enumerator **ESP_BLE_MESH_LIGHTING_SERVER_RECV_GET_MSG_EVT**

When get_auto_rsp is set to ESP_BLE_MESH_SERVER_RSP_BY_APP, this event will be callback to the application layer when Lighting Get messages are received.

enumerator **ESP_BLE_MESH_LIGHTING_SERVER_RECV_SET_MSG_EVT**

When set_auto_rsp is set to ESP_BLE_MESH_SERVER_RSP_BY_APP, this event will be callback to the application layer when Lighting Set/Set Unack messages are received.

enumerator **ESP_BLE_MESH_LIGHTING_SERVER_RECV_STATUS_MSG_EVT**

When status_auto_rsp is set to ESP_BLE_MESH_SERVER_RSP_BY_APP, this event will be callback to the application layer when Sensor Status message is received.

enumerator **ESP_BLE_MESH_LIGHTING_SERVER_EVT_MAX**

ESP-IDF currently supports two host stacks. The Bluedroid based stack (default) supports classic Bluetooth as well as BLE. On the other hand, Apache NimBLE based stack is BLE only. For users to make a choice:

- For usecases involving classic Bluetooth as well as BLE, Bluedroid should be used.
- For BLE-only usecases, using NimBLE is recommended. It is less demanding in terms of code footprint and runtime memory, making it suitable for such scenarios.

For the overview of the ESP32 Bluetooth stack architecture, follow the links below:

- ESP32 Bluetooth Architecture (PDF) [English]
- ESP32 Bluetooth Architecture (PDF) [中文]

Code examples for this API section are provided in the bluetooth/bluedroid directory of ESP-IDF examples.

The following examples contain detailed walkthroughs:

- GATT Client Example Walkthrough
- GATT Server Service Table Example Walkthrough
- GATT Server Example Walkthrough
- GATT Security Client Example Walkthrough
- GATT Security Server Example Walkthrough
- GATT Client Multi-connection Example Walkthrough

2.2 Networking APIs

2.2.1 Wi-Fi

Wi-Fi

Introduction The Wi-Fi libraries provide support for configuring and monitoring the ESP32 Wi-Fi networking functionality. This includes configuration for:

- Station mode (aka STA mode or Wi-Fi client mode). ESP32 connects to an access point.
- AP mode (aka Soft-AP mode or Access Point mode). Stations connect to the ESP32.
- Combined AP-STA mode (ESP32 is concurrently an access point and a station connected to another access point).
- Various security modes for the above (WPA, WPA2, WEP, etc.)
- Scanning for access points (active & passive scanning).
- Promiscuous mode for monitoring of IEEE802.11 Wi-Fi packets.

Application Examples The wifi directory of ESP-IDF examples contains the following applications:

Code examples for Wi-Fi are provided in the wifi directory of ESP-IDF examples.

In addition, there is a simple esp-idf-template application to demonstrate a minimal IDF project structure.

API Reference

Header File

- components/esp_wifi/include/esp_wifi.h

Functions

esp_err_t **esp_wifi_init** (const *wifi_init_config_t* *config)

Initialize WiFi Allocate resource for WiFi driver, such as WiFi control structure, RX/TX buffer, WiFi NVS structure etc. This WiFi also starts WiFi task.

Attention 1. This API must be called before all other WiFi API can be called

Attention 2. Always use WIFI_INIT_CONFIG_DEFAULT macro to initialize the configuration to default values, this can guarantee all the fields get correct value when more fields are added into *wifi_init_config_t* in future release. If you want to set your own initial values, overwrite the default values which are set by WIFI_INIT_CONFIG_DEFAULT. Please be notified that the field 'magic' of *wifi_init_config_t* should always be WIFI_INIT_CONFIG_MAGIC!

Parameters **config** –pointer to WiFi initialized configuration structure; can point to a temporary variable.

Returns

- ESP_OK: succeed
- ESP_ERR_NO_MEM: out of memory
- others: refer to error code esp_err.h

esp_err_t **esp_wifi_deinit** (void)

Deinit WiFi Free all resource allocated in esp_wifi_init and stop WiFi task.

Attention 1. This API should be called if you want to remove WiFi driver from the system

Returns

- ESP_OK: succeed
- ESP_ERR_WIFI_NOT_INIT: WiFi is not initialized by esp_wifi_init

esp_err_t **esp_wifi_set_mode** (*wifi_mode_t* mode)

Set the WiFi operating mode.

Set the WiFi operating mode as station, soft-AP or station+soft-AP, The default mode is station mode.

Parameters **mode** –WiFi operating mode

Returns

- ESP_OK: succeed
- ESP_ERR_WIFI_NOT_INIT: WiFi is not initialized by esp_wifi_init
- ESP_ERR_INVALID_ARG: invalid argument
- others: refer to error code in esp_err.h

esp_err_t **esp_wifi_get_mode** (*wifi_mode_t* *mode)

Get current operating mode of WiFi.

Parameters **mode** –**[out]** store current WiFi mode

Returns

- ESP_OK: succeed
- ESP_ERR_WIFI_NOT_INIT: WiFi is not initialized by esp_wifi_init
- ESP_ERR_INVALID_ARG: invalid argument

esp_err_t **esp_wifi_start** (void)

Start WiFi according to current configuration If mode is WIFI_MODE_STA, it create station control block and start station If mode is WIFI_MODE_AP, it create soft-AP control block and start soft-AP If mode is WIFI_MODE_APSTA, it create soft-AP and station control block and start soft-AP and station.

Returns

- ESP_OK: succeed
- ESP_ERR_WIFI_NOT_INIT: WiFi is not initialized by esp_wifi_init
- ESP_ERR_INVALID_ARG: invalid argument
- ESP_ERR_NO_MEM: out of memory
- ESP_ERR_WIFI_CONN: WiFi internal error, station or soft-AP control block wrong
- ESP_FAIL: other WiFi internal errors

esp_err_t **esp_wifi_stop** (void)

Stop WiFi If mode is WIFI_MODE_STA, it stop station and free station control block If mode is WIFI_MODE_AP, it stop soft-AP and free soft-AP control block If mode is WIFI_MODE_APSTA, it stop station/soft-AP and free station/soft-AP control block.

Returns
- ESP_OK: succeed
- ESP_ERR_WIFI_NOT_INIT: WiFi is not initialized by esp_wifi_init

esp_err_t **esp_wifi_restore**(void)

Restore WiFi stack persistent settings to default values.

This function will reset settings made using the following APIs:

- esp_wifi_set_bandwidth,
- esp_wifi_set_protocol,
- esp_wifi_set_config related
- esp_wifi_set_mode

Returns
- ESP_OK: succeed
- ESP_ERR_WIFI_NOT_INIT: WiFi is not initialized by esp_wifi_init

esp_err_t **esp_wifi_connect**(void)

Connect the ESP32 WiFi station to the AP.

Attention 1. This API only impact WIFI_MODE_STA or WIFI_MODE_APSTA mode

Attention 2. If the ESP32 is connected to an AP, call esp_wifi_disconnect to disconnect.

Attention 3. The scanning triggered by esp_wifi_scan_start() will not be effective until connection between ESP32 and the AP is established. If ESP32 is scanning and connecting at the same time, ESP32 will abort scanning and return a warning message and error number ESP_ERR_WIFI_STATE. If you want to do reconnection after ESP32 received disconnect event, remember to add the maximum retry time, otherwise the called scan will not work. This is especially true when the AP doesn't exist, and you still try reconnection after ESP32 received disconnect event with the reason code WIFI_REASON_NO_AP_FOUND.

Returns
- ESP_OK: succeed
- ESP_ERR_WIFI_NOT_INIT: WiFi is not initialized by esp_wifi_init
- ESP_ERR_WIFI_NOT_STARTED: WiFi is not started by esp_wifi_start
- ESP_ERR_WIFI_CONN: WiFi internal error, station or soft-AP control block wrong
- ESP_ERR_WIFI_SSID: SSID of AP which station connects is invalid

esp_err_t **esp_wifi_disconnect**(void)

Disconnect the ESP32 WiFi station from the AP.

Returns
- ESP_OK: succeed
- ESP_ERR_WIFI_NOT_INIT: WiFi was not initialized by esp_wifi_init
- ESP_ERR_WIFI_NOT_STARTED: WiFi was not started by esp_wifi_start
- ESP_FAIL: other WiFi internal errors

esp_err_t **esp_wifi_clear_fast_connect**(void)

Currently this API is just an stub API.

Returns
- ESP_OK: succeed
- others: fail

esp_err_t **esp_wifi_deauth_sta**(uint16_t aid)

deauthenticate all stations or associated id equals to aid

Parameters **aid** –when aid is 0, deauthenticate all stations, otherwise deauthenticate station whose associated id is aid

Returns
- ESP_OK: succeed

- ESP_ERR_WIFI_NOT_INIT: WiFi is not initialized by esp_wifi_init
- ESP_ERR_WIFI_NOT_STARTED: WiFi was not started by esp_wifi_start
- ESP_ERR_INVALID_ARG: invalid argument
- ESP_ERR_WIFI_MODE: WiFi mode is wrong

esp_err_t **esp_wifi_scan_start**(const *wifi_scan_config_t* *config, bool block)

Scan all available APs.

Attention If this API is called, the found APs are stored in WiFi driver dynamic allocated memory and the will be freed in esp_wifi_scan_get_ap_records, so generally, call esp_wifi_scan_get_ap_records to cause the memory to be freed once the scan is done

Attention The values of maximum active scan time and passive scan time per channel are limited to 1500 milliseconds. Values above 1500ms may cause station to disconnect from AP and are not recommended.

Parameters

- **config** –configuration of scanning
- **block** –if block is true, this API will block the caller until the scan is done, otherwise it will return immediately

Returns

- ESP_OK: succeed
- ESP_ERR_WIFI_NOT_INIT: WiFi is not initialized by esp_wifi_init
- ESP_ERR_WIFI_NOT_STARTED: WiFi was not started by esp_wifi_start
- ESP_ERR_WIFI_TIMEOUT: blocking scan is timeout
- ESP_ERR_WIFI_STATE: wifi still connecting when invoke esp_wifi_scan_start
- others: refer to error code in esp_err.h

esp_err_t **esp_wifi_scan_stop**(void)

Stop the scan in process.

Returns

- ESP_OK: succeed
- ESP_ERR_WIFI_NOT_INIT: WiFi is not initialized by esp_wifi_init
- ESP_ERR_WIFI_NOT_STARTED: WiFi is not started by esp_wifi_start

esp_err_t **esp_wifi_scan_get_ap_num**(uint16_t *number)

Get number of APs found in last scan.

Attention This API can only be called when the scan is completed, otherwise it may get wrong value.

Parameters **number** –**[out]** store number of APIs found in last scan

Returns

- ESP_OK: succeed
- ESP_ERR_WIFI_NOT_INIT: WiFi is not initialized by esp_wifi_init
- ESP_ERR_WIFI_NOT_STARTED: WiFi is not started by esp_wifi_start
- ESP_ERR_INVALID_ARG: invalid argument

esp_err_t **esp_wifi_scan_get_ap_records**(uint16_t *number, *wifi_ap_record_t* *ap_records)

Get AP list found in last scan.

Parameters

- **number** –**[inout]** As input param, it stores max AP number ap_records can hold. As output param, it receives the actual AP number this API returns.
- **ap_records** –*wifi_ap_record_t* array to hold the found APs

Returns

- ESP_OK: succeed
- ESP_ERR_WIFI_NOT_INIT: WiFi is not initialized by esp_wifi_init
- ESP_ERR_WIFI_NOT_STARTED: WiFi is not started by esp_wifi_start

- ESP_ERR_INVALID_ARG: invalid argument
- ESP_ERR_NO_MEM: out of memory

esp_err_t **esp_wifi_sta_get_ap_info**(*wifi_ap_record_t* *ap_info)

Get information of AP which the ESP32 station is associated with.

Attention When the obtained country information is empty, it means that the AP does not carry country information

Parameters **ap_info** –the *wifi_ap_record_t* to hold AP information sta can get the connected ap's phy mode info through the struct member phy_11b, phy_11g, phy_11n, phy_lr in the *wifi_ap_record_t* struct. For example, phy_11b = 1 imply that ap support 802.11b mode

Returns

- ESP_OK: succeed
- ESP_ERR_WIFI_CONN: The station interface don't initialized
- ESP_ERR_WIFI_NOT_CONNECT: The station is in disconnect status

esp_err_t **esp_wifi_set_ps**(*wifi_ps_type_t* type)

Set current WiFi power save type.

Attention Default power save type is WIFI_PS_MIN_MODEM.

Parameters **type** –power save type

Returns ESP_OK: succeed

esp_err_t **esp_wifi_get_ps**(*wifi_ps_type_t* *type)

Get current WiFi power save type.

Attention Default power save type is WIFI_PS_MIN_MODEM.

Parameters **type** –**[out]** store current power save type

Returns ESP_OK: succeed

esp_err_t **esp_wifi_set_protocol**(*wifi_interface_t* ifx, uint8_t protocol_bitmap)

Set protocol type of specified interface The default protocol is (WIFI_PROTOCOL_11B|WIFI_PROTOCOL_11G|WIFI_PROT

Attention Support 802.11b or 802.11bg or 802.11bgn or LR mode

Parameters

- **ifx** –interfaces
- **protocol_bitmap** –WiFi protocol bitmap

Returns

- ESP_OK: succeed
- ESP_ERR_WIFI_NOT_INIT: WiFi is not initialized by esp_wifi_init
- ESP_ERR_WIFI_IF: invalid interface
- others: refer to error codes in esp_err.h

esp_err_t **esp_wifi_get_protocol**(*wifi_interface_t* ifx, uint8_t *protocol_bitmap)

Get the current protocol bitmap of the specified interface.

Parameters

- **ifx** –interface
- **protocol_bitmap** –**[out]** store current WiFi protocol bitmap of interface ifx

Returns

- ESP_OK: succeed
- ESP_ERR_WIFI_NOT_INIT: WiFi is not initialized by esp_wifi_init
- ESP_ERR_WIFI_IF: invalid interface
- ESP_ERR_INVALID_ARG: invalid argument
- others: refer to error codes in esp_err.h

esp_err_t **esp_wifi_set_bandwidth**(*wifi_interface_t* ifx, *wifi_bandwidth_t* bw)

Set the bandwidth of ESP32 specified interface.

Attention 1. API return false if try to configure an interface that is not enabled

Attention 2. WIFI_BW_HT40 is supported only when the interface support 11N

Parameters

- **ifx** –interface to be configured
- **bw** –bandwidth

Returns

- ESP_OK: succeed
- ESP_ERR_WIFI_NOT_INIT: WiFi is not initialized by esp_wifi_init
- ESP_ERR_WIFI_IF: invalid interface
- ESP_ERR_INVALID_ARG: invalid argument
- others: refer to error codes in esp_err.h

esp_err_t **esp_wifi_get_bandwidth**(*wifi_interface_t* ifx, *wifi_bandwidth_t* *bw)

Get the bandwidth of ESP32 specified interface.

Attention 1. API return false if try to get a interface that is not enable

Parameters

- **ifx** –interface to be configured
- **bw** –**[out]** store bandwidth of interface ifx

Returns

- ESP_OK: succeed
- ESP_ERR_WIFI_NOT_INIT: WiFi is not initialized by esp_wifi_init
- ESP_ERR_WIFI_IF: invalid interface
- ESP_ERR_INVALID_ARG: invalid argument

esp_err_t **esp_wifi_set_channel**(uint8_t primary, *wifi_second_chan_t* second)

Set primary/secondary channel of ESP32.

Attention 1. This API should be called after esp_wifi_start()

Attention 2. When ESP32 is in STA mode, this API should not be called when STA is scanning or connecting to an external AP

Attention 3. When ESP32 is in softAP mode, this API should not be called when softAP has connected to external STAs

Attention 4. When ESP32 is in STA+softAP mode, this API should not be called when in the scenarios described above

Parameters

- **primary** –for HT20, primary is the channel number, for HT40, primary is the primary channel
- **second** –for HT20, second is ignored, for HT40, second is the second channel

Returns

- ESP_OK: succeed
- ESP_ERR_WIFI_NOT_INIT: WiFi is not initialized by esp_wifi_init
- ESP_ERR_WIFI_IF: invalid interface

- ESP_ERR_INVALID_ARG: invalid argument

esp_err_t **esp_wifi_get_channel**(uint8_t *primary, *wifi_second_chan_t* *second)

Get the primary/secondary channel of ESP32.

Attention 1. API return false if try to get a interface that is not enable

Parameters
- **primary** –store current primary channel
- **second** –**[out]** store current second channel

Returns
- ESP_OK: succeed
- ESP_ERR_WIFI_NOT_INIT: WiFi is not initialized by esp_wifi_init
- ESP_ERR_INVALID_ARG: invalid argument

esp_err_t **esp_wifi_set_country**(const *wifi_country_t* *country)

configure country info

Attention 1. It is discouraged to call this API since this doesn't validate the per-country rules, it's up to the user to fill in all fields according to local regulations. Please use esp_wifi_set_country_code instead.

Attention 2. The default country is CHINA {.cc="CN", .schan=1, .nchan=13, .policy=WIFI_COUNTRY_POLICY_AUTO}.

Attention 3. The third octect of country code string is one of the following: ' ', 'O', 'I', 'X', otherwise it is considered as ' '.

Attention 4. When the country policy is WIFI_COUNTRY_POLICY_AUTO, the country info of the AP to which the station is connected is used. E.g. if the configured country info is {.cc="US", .schan=1, .nchan=11} and the country info of the AP to which the station is connected is {.cc="JP", .schan=1, .nchan=14} then the country info that will be used is {.cc="JP", .schan=1, .nchan=14}. If the station disconnected from the AP the country info is set back to the country info of the station automatically, {.cc="US", .schan=1, .nchan=11} in the example.

Attention 5. When the country policy is WIFI_COUNTRY_POLICY_MANUAL, then the configured country info is used always.

Attention 6. When the country info is changed because of configuration or because the station connects to a different external AP, the country IE in probe response/beacon of the soft-AP is also changed.

Attention 7. The country configuration is stored into flash.

Attention 8. When this API is called, the PHY init data will switch to the PHY init data type corresponding to the country info.

Parameters **country** –the configured country info

Returns
- ESP_OK: succeed
- ESP_ERR_WIFI_NOT_INIT: WiFi is not initialized by esp_wifi_init
- ESP_ERR_INVALID_ARG: invalid argument

esp_err_t **esp_wifi_get_country**(*wifi_country_t* *country)

get the current country info

Parameters **country** –country info

Returns
- ESP_OK: succeed
- ESP_ERR_WIFI_NOT_INIT: WiFi is not initialized by esp_wifi_init
- ESP_ERR_INVALID_ARG: invalid argument

esp_err_t **esp_wifi_set_mac**(*wifi_interface_t* ifx, const uint8_t mac[6])

Set MAC address of the ESP32 WiFi station or the soft-AP interface.

Attention 1. This API can only be called when the interface is disabled
Attention 2. ESP32 soft-AP and station have different MAC addresses, do not set them to be the same.
Attention 3. The bit 0 of the first byte of ESP32 MAC address can not be 1. For example, the MAC address can set to be "1a:XX:XX:XX:XX:XX", but can not be "15:XX:XX:XX:XX:XX".

Parameters
- **ifx** –interface
- **mac** –the MAC address

Returns
- ESP_OK: succeed
- ESP_ERR_WIFI_NOT_INIT: WiFi is not initialized by esp_wifi_init
- ESP_ERR_INVALID_ARG: invalid argument
- ESP_ERR_WIFI_IF: invalid interface
- ESP_ERR_WIFI_MAC: invalid mac address
- ESP_ERR_WIFI_MODE: WiFi mode is wrong
- others: refer to error codes in esp_err.h

esp_err_t **esp_wifi_get_mac**(*wifi_interface_t* ifx, uint8_t mac[6])

Get mac of specified interface.

Parameters
- **ifx** –interface
- **mac** –**[out]** store mac of the interface ifx

Returns
- ESP_OK: succeed
- ESP_ERR_WIFI_NOT_INIT: WiFi is not initialized by esp_wifi_init
- ESP_ERR_INVALID_ARG: invalid argument
- ESP_ERR_WIFI_IF: invalid interface

esp_err_t **esp_wifi_set_promiscuous_rx_cb**(*wifi_promiscuous_cb_t* cb)

Register the RX callback function in the promiscuous mode.

Each time a packet is received, the registered callback function will be called.

Parameters **cb** –callback

Returns
- ESP_OK: succeed
- ESP_ERR_WIFI_NOT_INIT: WiFi is not initialized by esp_wifi_init

esp_err_t **esp_wifi_set_promiscuous**(bool en)

Enable the promiscuous mode.

Parameters **en** –false - disable, true - enable

Returns
- ESP_OK: succeed
- ESP_ERR_WIFI_NOT_INIT: WiFi is not initialized by esp_wifi_init

esp_err_t **esp_wifi_get_promiscuous**(bool *en)

Get the promiscuous mode.

Parameters **en** –**[out]** store the current status of promiscuous mode

Returns
- ESP_OK: succeed
- ESP_ERR_WIFI_NOT_INIT: WiFi is not initialized by esp_wifi_init
- ESP_ERR_INVALID_ARG: invalid argument

esp_err_t **esp_wifi_set_promiscuous_filter**(const *wifi_promiscuous_filter_t* *filter)

Enable the promiscuous mode packet type filter.

Note: The default filter is to filter all packets except WIFI_PKT_MISC

Parameters **filter** –the packet type filtered in promiscuous mode.
Returns
- ESP_OK: succeed
- ESP_ERR_WIFI_NOT_INIT: WiFi is not initialized by esp_wifi_init

esp_err_t **esp_wifi_get_promiscuous_filter**(*wifi_promiscuous_filter_t* *filter)

Get the promiscuous filter.

Parameters **filter** –**[out]** store the current status of promiscuous filter
Returns
- ESP_OK: succeed
- ESP_ERR_WIFI_NOT_INIT: WiFi is not initialized by esp_wifi_init
- ESP_ERR_INVALID_ARG: invalid argument

esp_err_t **esp_wifi_set_promiscuous_ctrl_filter**(const *wifi_promiscuous_filter_t* *filter)

Enable subtype filter of the control packet in promiscuous mode.

Note: The default filter is to filter none control packet.

Parameters **filter** –the subtype of the control packet filtered in promiscuous mode.
Returns
- ESP_OK: succeed
- ESP_ERR_WIFI_NOT_INIT: WiFi is not initialized by esp_wifi_init

esp_err_t **esp_wifi_get_promiscuous_ctrl_filter**(*wifi_promiscuous_filter_t* *filter)

Get the subtype filter of the control packet in promiscuous mode.

Parameters **filter** –**[out]** store the current status of subtype filter of the control packet in promiscuous mode
Returns
- ESP_OK: succeed
- ESP_ERR_WIFI_NOT_INIT: WiFi is not initialized by esp_wifi_init
- ESP_ERR_WIFI_ARG: invalid argument

esp_err_t **esp_wifi_set_config**(*wifi_interface_t* interface, *wifi_config_t* *conf)

Set the configuration of the ESP32 STA or AP.

Attention 1. This API can be called only when specified interface is enabled, otherwise, API fail
Attention 2. For station configuration, bssid_set needs to be 0; and it needs to be 1 only when users need to check the MAC address of the AP.
Attention 3. ESP32 is limited to only one channel, so when in the soft-AP+station mode, the soft-AP will adjust its channel automatically to be the same as the channel of the ESP32 station.

Parameters
- **interface** –interface
- **conf** –station or soft-AP configuration

Returns
- ESP_OK: succeed
- ESP_ERR_WIFI_NOT_INIT: WiFi is not initialized by esp_wifi_init
- ESP_ERR_INVALID_ARG: invalid argument
- ESP_ERR_WIFI_IF: invalid interface
- ESP_ERR_WIFI_MODE: invalid mode
- ESP_ERR_WIFI_PASSWORD: invalid password
- ESP_ERR_WIFI_NVS: WiFi internal NVS error
- others: refer to the erro code in esp_err.h

esp_err_t **esp_wifi_get_config**(*wifi_interface_t* interface, *wifi_config_t* *conf)

Get configuration of specified interface.

Parameters
- **interface** –interface
- **conf** –**[out]** station or soft-AP configuration

Returns
- ESP_OK: succeed
- ESP_ERR_WIFI_NOT_INIT: WiFi is not initialized by esp_wifi_init
- ESP_ERR_INVALID_ARG: invalid argument
- ESP_ERR_WIFI_IF: invalid interface

esp_err_t **esp_wifi_ap_get_sta_list**(*wifi_sta_list_t* *sta)

Get STAs associated with soft-AP.

Attention SSC only API

Parameters **sta** –**[out]** station list ap can get the connected sta's phy mode info through the struct member phy_11b, phy_11g, phy_11n, phy_lr in the *wifi_sta_info_t* struct. For example, phy_11b = 1 imply that sta support 802.11b mode

Returns
- ESP_OK: succeed
- ESP_ERR_WIFI_NOT_INIT: WiFi is not initialized by esp_wifi_init
- ESP_ERR_INVALID_ARG: invalid argument
- ESP_ERR_WIFI_MODE: WiFi mode is wrong
- ESP_ERR_WIFI_CONN: WiFi internal error, the station/soft-AP control block is invalid

esp_err_t **esp_wifi_ap_get_sta_aid**(const uint8_t mac[6], uint16_t *aid)

Get AID of STA connected with soft-AP.

Parameters
- **mac** –STA's mac address
- **aid** –**[out]** Store the AID corresponding to STA mac

Returns
- ESP_OK: succeed
- ESP_ERR_WIFI_NOT_INIT: WiFi is not initialized by esp_wifi_init
- ESP_ERR_INVALID_ARG: invalid argument
- ESP_ERR_NOT_FOUND: Requested resource not found
- ESP_ERR_WIFI_MODE: WiFi mode is wrong
- ESP_ERR_WIFI_CONN: WiFi internal error, the station/soft-AP control block is invalid

esp_err_t **esp_wifi_set_storage**(*wifi_storage_t* storage)

Set the WiFi API configuration storage type.

Attention 1. The default value is WIFI_STORAGE_FLASH

Parameters **storage** –: storage type

Returns
- ESP_OK: succeed
- ESP_ERR_WIFI_NOT_INIT: WiFi is not initialized by esp_wifi_init
- ESP_ERR_INVALID_ARG: invalid argument

esp_err_t **esp_wifi_set_vendor_ie**(bool enable, *wifi_vendor_ie_type_t* type, *wifi_vendor_ie_id_t* idx, const void *vnd_ie)

Set 802.11 Vendor-Specific Information Element.

Parameters

- **enable** –If true, specified IE is enabled. If false, specified IE is removed.
- **type** –Information Element type. Determines the frame type to associate with the IE.
- **idx** –Index to set or clear. Each IE type can be associated with up to two elements (indices 0 & 1).
- **vnd_ie** –Pointer to vendor specific element data. First 6 bytes should be a header with fields matching *vendor_ie_data_t*. If enable is false, this argument is ignored and can be NULL. Data does not need to remain valid after the function returns.

Returns

- ESP_OK: succeed
- ESP_ERR_WIFI_NOT_INIT: WiFi is not initialized by esp_wifi_init()
- ESP_ERR_INVALID_ARG: Invalid argument, including if first byte of vnd_ie is not WIFI_VENDOR_IE_ELEMENT_ID (0xDD) or second byte is an invalid length.
- ESP_ERR_NO_MEM: Out of memory

esp_err_t **esp_wifi_set_vendor_ie_cb**(*esp_vendor_ie_cb_t* cb, void *ctx)

Register Vendor-Specific Information Element monitoring callback.

Parameters

- **cb** –Callback function
- **ctx** –Context argument, passed to callback function.

Returns

- ESP_OK: succeed
- ESP_ERR_WIFI_NOT_INIT: WiFi is not initialized by esp_wifi_init

esp_err_t **esp_wifi_set_max_tx_power**(int8_t power)

Set maximum transmitting power after WiFi start.

Attention 1. Maximum power before wifi startup is limited by PHY init data bin.

Attention 2. The value set by this API will be mapped to the max_tx_power of the structure *wifi_country_t* variable.

Attention 3. Mapping Table {Power, max_tx_power} = {{8, 2}, {20, 5}, {28, 7}, {34, 8}, {44, 11}, {52, 13}, {56, 14}, {60, 15}, {66, 16}, {72, 18}, {80, 20}}.

Attention 4. Param power unit is 0.25dBm, range is [8, 84] corresponding to 2dBm - 20dBm.

Attention 5. Relationship between set value and actual value. As follows: {set value range, actual value} = {{[8, 19],8}, {[20, 27],20}, {[28, 33],28}, {[34, 43],34}, {[44, 51],44}, {[52, 55],52}, {[56, 59],56}, {[60, 65],60}, {[66, 71],66}, {[72, 79],72}, {[80, 84],80}}.

Parameters **power** –Maximum WiFi transmitting power.

Returns

- ESP_OK: succeed
- ESP_ERR_WIFI_NOT_INIT: WiFi is not initialized by esp_wifi_init
- ESP_ERR_WIFI_NOT_STARTED: WiFi is not started by esp_wifi_start
- ESP_ERR_WIFI_ARG: invalid argument, e.g. parameter is out of range

esp_err_t **esp_wifi_get_max_tx_power**(int8_t *power)

Get maximum transmiting power after WiFi start.

Parameters **power** –Maximum WiFi transmitting power, unit is 0.25dBm.

Returns

- ESP_OK: succeed
- ESP_ERR_WIFI_NOT_INIT: WiFi is not initialized by esp_wifi_init
- ESP_ERR_WIFI_NOT_STARTED: WiFi is not started by esp_wifi_start
- ESP_ERR_WIFI_ARG: invalid argument

esp_err_t **esp_wifi_set_event_mask**(uint32_t mask)

Set mask to enable or disable some WiFi events.

Attention 1. Mask can be created by logical OR of various WIFI_EVENT_MASK_ constants. Events which have corresponding bit set in the mask will not be delivered to the system event handler.

Attention 2. Default WiFi event mask is WIFI_EVENT_MASK_AP_PROBEREQRECVED.

Attention 3. There may be lots of stations sending probe request data around. Don't unmask this event unless you need to receive probe request data.

Parameters **mask** –WiFi event mask.

Returns

- ESP_OK: succeed
- ESP_ERR_WIFI_NOT_INIT: WiFi is not initialized by esp_wifi_init

esp_err_t **esp_wifi_get_event_mask**(uint32_t *mask)

Get mask of WiFi events.

Parameters **mask** –WiFi event mask.

Returns

- ESP_OK: succeed
- ESP_ERR_WIFI_NOT_INIT: WiFi is not initialized by esp_wifi_init
- ESP_ERR_WIFI_ARG: invalid argument

esp_err_t **esp_wifi_80211_tx**(*wifi_interface_t* ifx, const void *buffer, int len, bool en_sys_seq)

Send raw ieee80211 data.

Attention Currently only support for sending beacon/probe request/probe response/action and non-QoS data frame

Parameters

- **ifx** –interface if the Wi-Fi mode is Station, the ifx should be WIFI_IF_STA. If the Wi-Fi mode is SoftAP, the ifx should be WIFI_IF_AP. If the Wi-Fi mode is Station+SoftAP, the ifx should be WIFI_IF_STA or WIFI_IF_AP. If the ifx is wrong, the API returns ESP_ERR_WIFI_IF.
- **buffer** –raw ieee80211 buffer
- **len** –the length of raw buffer, the len must be <= 1500 Bytes and >= 24 Bytes
- **en_sys_seq** –indicate whether use the internal sequence number. If en_sys_seq is false, the sequence in raw buffer is unchanged, otherwise it will be overwritten by WiFi driver with the system sequence number. Generally, if esp_wifi_80211_tx is called before the Wi-Fi connection has been set up, both en_sys_seq==true and en_sys_seq==false are fine. However, if the API is called after the Wi-Fi connection has been set up, en_sys_seq must be true, otherwise ESP_ERR_WIFI_ARG is returned.

Returns

- ESP_OK: success
- ESP_ERR_WIFI_IF: Invalid interface
- ESP_ERR_INVALID_ARG: Invalid parameter
- ESP_ERR_WIFI_NO_MEM: out of memory

esp_err_t **esp_wifi_set_csi_rx_cb**(*wifi_csi_cb_t* cb, void *ctx)

Register the RX callback function of CSI data.

Each time a CSI data is received, the callback function will be called.

Parameters

- **cb** –callback
- **ctx** –context argument, passed to callback function

Returns

- ESP_OK: succeed
- ESP_ERR_WIFI_NOT_INIT: WiFi is not initialized by esp_wifi_init

esp_err_t **esp_wifi_set_csi_config**(const *wifi_csi_config_t* *config)

Set CSI data configuration.

return

- ESP_OK: succeed
- ESP_ERR_WIFI_NOT_INIT: WiFi is not initialized by esp_wifi_init
- ESP_ERR_WIFI_NOT_STARTED: WiFi is not started by esp_wifi_start or promiscuous mode is not enabled
- ESP_ERR_INVALID_ARG: invalid argument

Parameters **config** –configuration

esp_err_t **esp_wifi_set_csi**(bool en)

Enable or disable CSI.

return

- ESP_OK: succeed
- ESP_ERR_WIFI_NOT_INIT: WiFi is not initialized by esp_wifi_init
- ESP_ERR_WIFI_NOT_STARTED: WiFi is not started by esp_wifi_start or promiscuous mode is not enabled
- ESP_ERR_INVALID_ARG: invalid argument

Parameters **en** –true - enable, false - disable

esp_err_t **esp_wifi_set_ant_gpio**(const *wifi_ant_gpio_config_t* *config)

Set antenna GPIO configuration.

Parameters **config** –Antenna GPIO configuration.
Returns

- ESP_OK: succeed
- ESP_ERR_WIFI_NOT_INIT: WiFi is not initialized by esp_wifi_init
- ESP_ERR_WIFI_ARG: Invalid argument, e.g. parameter is NULL, invalid GPIO number etc

esp_err_t **esp_wifi_get_ant_gpio**(*wifi_ant_gpio_config_t* *config)

Get current antenna GPIO configuration.

Parameters **config** –Antenna GPIO configuration.
Returns

- ESP_OK: succeed
- ESP_ERR_WIFI_NOT_INIT: WiFi is not initialized by esp_wifi_init
- ESP_ERR_WIFI_ARG: invalid argument, e.g. parameter is NULL

esp_err_t **esp_wifi_set_ant**(const *wifi_ant_config_t* *config)

Set antenna configuration.

Parameters **config** –Antenna configuration.
Returns

- ESP_OK: succeed
- ESP_ERR_WIFI_NOT_INIT: WiFi is not initialized by esp_wifi_init
- ESP_ERR_WIFI_ARG: Invalid argument, e.g. parameter is NULL, invalid antenna mode or invalid GPIO number

esp_err_t **esp_wifi_get_ant**(*wifi_ant_config_t* *config)

Get current antenna configuration.

Parameters **config** –Antenna configuration.

Returns
- ESP_OK: succeed
- ESP_ERR_WIFI_NOT_INIT: WiFi is not initialized by esp_wifi_init
- ESP_ERR_WIFI_ARG: invalid argument, e.g. parameter is NULL

int64_t **esp_wifi_get_tsf_time**(*wifi_interface_t* interface)

Get the TSF time In Station mode or SoftAP+Station mode if station is not connected or station doesn't receive at least one beacon after connected, will return 0.

Attention Enabling power save may cause the return value inaccurate, except WiFi modem sleep

Parameters **interface** –The interface whose tsf_time is to be retrieved.
Returns 0 or the TSF time

esp_err_t **esp_wifi_set_inactive_time**(*wifi_interface_t* ifx, uint16_t sec)

Set the inactive time of the ESP32 STA or AP.

Attention 1. For Station, If the station does not receive a beacon frame from the connected SoftAP during the inactive time, disconnect from SoftAP. Default 6s.
Attention 2. For SoftAP, If the softAP doesn't receive any data from the connected STA during inactive time, the softAP will force deauth the STA. Default is 300s.
Attention 3. The inactive time configuration is not stored into flash

Parameters
- **ifx** –interface to be configured.
- **sec** –Inactive time. Unit seconds.

Returns
- ESP_OK: succeed
- ESP_ERR_WIFI_NOT_INIT: WiFi is not initialized by esp_wifi_init
- ESP_ERR_WIFI_NOT_STARTED: WiFi is not started by esp_wifi_start
- ESP_ERR_WIFI_ARG: invalid argument, For Station, if sec is less than 3. For SoftAP, if sec is less than 10.

esp_err_t **esp_wifi_get_inactive_time**(*wifi_interface_t* ifx, uint16_t *sec)

Get inactive time of specified interface.

Parameters
- **ifx** –Interface to be configured.
- **sec** –Inactive time. Unit seconds.

Returns
- ESP_OK: succeed
- ESP_ERR_WIFI_NOT_INIT: WiFi is not initialized by esp_wifi_init
- ESP_ERR_WIFI_ARG: invalid argument

esp_err_t **esp_wifi_statis_dump**(uint32_t modules)

Dump WiFi statistics.

Parameters **modules** –statistic modules to be dumped
Returns
- ESP_OK: succeed
- others: failed

esp_err_t **esp_wifi_set_rssi_threshold**(int32_t rssi)

Set RSSI threshold below which APP will get an event.

Attention This API needs to be called every time after WIFI_EVENT_STA_BSS_RSSI_LOW event is received.

Parameters **rssi** –threshold value in dbm between -100 to 0
Returns
- ESP_OK: succeed
- ESP_ERR_WIFI_NOT_INIT: WiFi is not initialized by esp_wifi_init
- ESP_ERR_WIFI_ARG: invalid argument

esp_err_t **esp_wifi_ftm_initiate_session**(*wifi_ftm_initiator_cfg_t* *cfg)

Start an FTM Initiator session by sending FTM request If successful, event WIFI_EVENT_FTM_REPORT is generated with the result of the FTM procedure.

Attention Use this API only in Station mode

Parameters **cfg** –FTM Initiator session configuration
Returns
- ESP_OK: succeed
- others: failed

esp_err_t **esp_wifi_ftm_end_session**(void)

End the ongoing FTM Initiator session.

Attention This API works only on FTM Initiator

Returns
- ESP_OK: succeed
- others: failed

esp_err_t **esp_wifi_ftm_resp_set_offset**(int16_t offset_cm)

Set offset in cm for FTM Responder. An equivalent offset is calculated in picoseconds and added in TOD of FTM Measurement frame (T1).

Attention Use this API only in AP mode before performing FTM as responder

Parameters **offset_cm** –T1 Offset to be added in centimeters
Returns
- ESP_OK: succeed
- others: failed

esp_err_t **esp_wifi_config_11b_rate**(*wifi_interface_t* ifx, bool disable)

Enable or disable 11b rate of specified interface.

Attention 1. This API should be called after esp_wifi_init() and before esp_wifi_start().
Attention 2. Only when really need to disable 11b rate call this API otherwise don't call this.

Parameters
- **ifx** –Interface to be configured.
- **disable** –true means disable 11b rate while false means enable 11b rate.

Returns
- ESP_OK: succeed
- others: failed

esp_err_t **esp_wifi_set_connectionless_wake_interval**(uint16_t interval)

Set interval for station to wake up periodically at disconnected.

Attention 1. Only when ESP_WIFI_STA_DISCONNECTED_PM_ENABLE is enabled, this configuration could work

Attention 2. This configuration only work for station mode and disconnected status

Attention 3. This configuration would influence nothing until some module configure wake_window

Attention 4. A sensible interval which is not too small is recommended (e.g. 100ms)

Parameters **interval** –how much micriosecond would the chip wake up, from 1 to 65535.

esp_err_t **esp_wifi_set_country_code**(const char *country, bool ieee80211d_enabled)

configure country

Attention 1. When ieee80211d_enabled, the country info of the AP to which the station is connected is used. E.g. if the configured country is US and the country info of the AP to which the station is connected is JP then the country info that will be used is JP. If the station disconnected from the AP the country info is set back to the country info of the station automatically, US in the example.

Attention 2. When ieee80211d_enabled is disabled, then the configured country info is used always.

Attention 3. When the country info is changed because of configuration or because the station connects to a different external AP, the country IE in probe response/beacon of the soft-AP is also changed.

Attention 4. The country configuration is stored into flash.

Attention 5. When this API is called, the PHY init data will switch to the PHY init data type corresponding to the country info.

Attention 6. Supported country codes are "01" (world safe mode) "AT" ," AU" ," BE" ," BG" ," BR" , "CA" ," CH" ," CN" ," CY" ," CZ" ," DE" ," DK" ," EE" ," ES" ," FI" ," FR" ," GB" ," GR" ," HK" ," HR" ," HU" , "IE" ," IN" ," IS" ," IT" ," JP" ," KR" ," LI" ," LT" ," LU" ," LV" ," MT" ," MX" ," NL" ," NO" ," NZ" ," PL" ," PT" , "RO" ," SE" ," SI" ," SK" ," TW" ," US"

Attention 7. When country code "01" (world safe mode) is set, SoftAP mode won't contain country IE.

Attention 8. The default country is "CN" and ieee80211d_enabled is TRUE.

Attention 9. The third octect of country code string is one of the following: ' ', 'O', 'I', 'X', otherwise it is considered as ' '.

Parameters

- **country** –the configured country ISO code
- **ieee80211d_enabled** –802.11d is enabled or not

Returns

- ESP_OK: succeed
- ESP_ERR_WIFI_NOT_INIT: WiFi is not initialized by esp_wifi_init
- ESP_ERR_INVALID_ARG: invalid argument

esp_err_t **esp_wifi_get_country_code**(char *country)

get the current country code

Parameters **country** –country code

Returns

- ESP_OK: succeed
- ESP_ERR_WIFI_NOT_INIT: WiFi is not initialized by esp_wifi_init
- ESP_ERR_INVALID_ARG: invalid argument

esp_err_t **esp_wifi_config_80211_tx_rate**(*wifi_interface_t* ifx, *wifi_phy_rate_t* rate)

Config 80211 tx rate of specified interface.

Attention 1. This API should be called after esp_wifi_init() and before esp_wifi_start().

Parameters
- **ifx** –Interface to be configured.
- **rate** –Phy rate to be configured.

Returns
- ESP_OK: succeed
- others: failed

esp_err_t **esp_wifi_disable_pmf_config**(*wifi_interface_t* ifx)

Disable PMF configuration for specified interface.

Attention This API should be called after esp_wifi_set_config() and before esp_wifi_start().

Parameters **ifx** –Interface to be configured.

Returns
- ESP_OK: succeed
- others: failed

Structures

struct **wifi_init_config_t**

WiFi stack configuration parameters passed to esp_wifi_init call.

Public Members

system_event_handler_t **event_handler**

WiFi event handler

wifi_osi_funcs_t ***osi_funcs**

WiFi OS functions

wpa_crypto_funcs_t **wpa_crypto_funcs**

WiFi station crypto functions when connect

int **static_rx_buf_num**

WiFi static RX buffer number

int **dynamic_rx_buf_num**

WiFi dynamic RX buffer number

int **tx_buf_type**

WiFi TX buffer type

int **static_tx_buf_num**

WiFi static TX buffer number

int **dynamic_tx_buf_num**

WiFi dynamic TX buffer number

int **cache_tx_buf_num**

WiFi TX cache buffer number

int **csi_enable**

WiFi channel state information enable flag

int **ampdu_rx_enable**

WiFi AMPDU RX feature enable flag

int **ampdu_tx_enable**

WiFi AMPDU TX feature enable flag

int **amsdu_tx_enable**

WiFi AMSDU TX feature enable flag

int **nvs_enable**

WiFi NVS flash enable flag

int **nano_enable**

Nano option for printf/scan family enable flag

int **rx_ba_win**

WiFi Block Ack RX window size

int **wifi_task_core_id**

WiFi Task Core ID

int **beacon_max_len**

WiFi softAP maximum length of the beacon

int **mgmt_sbuf_num**

WiFi management short buffer number, the minimum value is 6, the maximum value is 32

uint64_t **feature_caps**

Enables additional WiFi features and capabilities

bool **sta_disconnected_pm**

WiFi Power Management for station at disconnected status

int **magic**

WiFi init magic number, it should be the last field

Macros

ESP_ERR_WIFI_NOT_INIT

WiFi driver was not installed by esp_wifi_init

ESP_ERR_WIFI_NOT_STARTED

WiFi driver was not started by esp_wifi_start

ESP_ERR_WIFI_NOT_STOPPED

WiFi driver was not stopped by esp_wifi_stop

ESP_ERR_WIFI_IF
WiFi interface error

ESP_ERR_WIFI_MODE
WiFi mode error

ESP_ERR_WIFI_STATE
WiFi internal state error

ESP_ERR_WIFI_CONN
WiFi internal control block of station or soft-AP error

ESP_ERR_WIFI_NVS
WiFi internal NVS module error

ESP_ERR_WIFI_MAC
MAC address is invalid

ESP_ERR_WIFI_SSID
SSID is invalid

ESP_ERR_WIFI_PASSWORD
Password is invalid

ESP_ERR_WIFI_TIMEOUT
Timeout error

ESP_ERR_WIFI_WAKE_FAIL
WiFi is in sleep state(RF closed) and wakeup fail

ESP_ERR_WIFI_WOULD_BLOCK
The caller would block

ESP_ERR_WIFI_NOT_CONNECT
Station still in disconnect status

ESP_ERR_WIFI_POST
Failed to post the event to WiFi task

ESP_ERR_WIFI_INIT_STATE
Invalid WiFi state when init/deinit is called

ESP_ERR_WIFI_STOP_STATE
Returned when WiFi is stopping

ESP_ERR_WIFI_NOT_ASSOC
The WiFi connection is not associated

ESP_ERR_WIFI_TX_DISALLOW

The WiFi TX is disallowed

WIFI_STATIC_TX_BUFFER_NUM

WIFI_CACHE_TX_BUFFER_NUM

WIFI_DYNAMIC_TX_BUFFER_NUM

WIFI_CSI_ENABLED

WIFI_AMPDU_RX_ENABLED

WIFI_AMPDU_TX_ENABLED

WIFI_AMSDU_TX_ENABLED

WIFI_NVS_ENABLED

WIFI_NANO_FORMAT_ENABLED

WIFI_INIT_CONFIG_MAGIC

WIFI_DEFAULT_RX_BA_WIN

WIFI_TASK_CORE_ID

WIFI_SOFTAP_BEACON_MAX_LEN

WIFI_MGMT_SBUF_NUM

WIFI_STA_DISCONNECTED_PM_ENABLED

CONFIG_FEATURE_WPA3_SAE_BIT

CONFIG_FEATURE_CACHE_TX_BUF_BIT

CONFIG_FEATURE_FTM_INITIATOR_BIT

CONFIG_FEATURE_FTM_RESPONDER_BIT

WIFI_INIT_CONFIG_DEFAULT()

Type Definitions

typedef void (*`wifi_promiscuous_cb_t`)(void *buf, *wifi_promiscuous_pkt_type_t* type)

The RX callback function in the promiscuous mode. Each time a packet is received, the callback function will be called.

Param buf Data received. Type of data in buffer (*wifi_promiscuous_pkt_t* or *wifi_pkt_rx_ctrl_t*) indicated by 'type' parameter.
Param type promiscuous packet type.

typedef void (*`esp_vendor_ie_cb_t`)(void *ctx, *wifi_vendor_ie_type_t* type, const uint8_t sa[6], const *vendor_ie_data_t* *vnd_ie, int rssi)

Function signature for received Vendor-Specific Information Element callback.

Param ctx Context argument, as passed to esp_wifi_set_vendor_ie_cb() when registering callback.
Param type Information element type, based on frame type received.
Param sa Source 802.11 address.
Param vnd_ie Pointer to the vendor specific element data received.
Param rssi Received signal strength indication.

typedef void (*`wifi_csi_cb_t`)(void *ctx, *wifi_csi_info_t* *data)

The RX callback function of Channel State Information(CSI) data.

Each time a CSI data is received, the callback function will be called.

Param ctx context argument, passed to esp_wifi_set_csi_rx_cb() when registering callback function.
Param data CSI data received. The memory that it points to will be deallocated after callback function returns.

Header File

- components/esp_wifi/include/esp_wifi_types.h

Unions

union `wifi_config_t`

#include <esp_wifi_types.h> Configuration data for ESP32 AP or STA.

The usage of this union (for ap or sta configuration) is determined by the accompanying interface argument passed to esp_wifi_set_config() or esp_wifi_get_config()

Public Members

wifi_ap_config_t `ap`

configuration of AP

wifi_sta_config_t `sta`

configuration of STA

Structures

struct `wifi_country_t`

Structure describing WiFi country-based regional restrictions.

Public Members

char **cc**[3]

country code string

uint8_t **schan**

start channel

uint8_t **nchan**

total channel number

int8_t **max_tx_power**

This field is used for getting WiFi maximum transmitting power, call esp_wifi_set_max_tx_power to set the maximum transmitting power.

wifi_country_policy_t **policy**

country policy

struct **wifi_active_scan_time_t**

Range of active scan times per channel.

Public Members

uint32_t **min**

minimum active scan time per channel, units: millisecond

uint32_t **max**

maximum active scan time per channel, units: millisecond, values above 1500ms may cause station to disconnect from AP and are not recommended.

struct **wifi_scan_time_t**

Aggregate of active & passive scan time per channel.

Public Members

wifi_active_scan_time_t **active**

active scan time per channel, units: millisecond.

uint32_t **passive**

passive scan time per channel, units: millisecond, values above 1500ms may cause station to disconnect from AP and are not recommended.

struct **wifi_scan_config_t**

Parameters for an SSID scan.

Public Members

uint8_t ***ssid**

SSID of AP

uint8_t ***bssid**

MAC address of AP

uint8_t **channel**

channel, scan the specific channel

bool **show_hidden**

enable to scan AP whose SSID is hidden

wifi_scan_type_t **scan_type**

scan type, active or passive

wifi_scan_time_t **scan_time**

scan time per channel

struct **wifi_ap_record_t**

Description of a WiFi AP.

Public Members

uint8_t **bssid**[6]

MAC address of AP

uint8_t **ssid**[33]

SSID of AP

uint8_t **primary**

channel of AP

wifi_second_chan_t **second**

secondary channel of AP

int8_t **rssi**

signal strength of AP

wifi_auth_mode_t **authmode**

authmode of AP

wifi_cipher_type_t **pairwise_cipher**

pairwise cipher of AP

wifi_cipher_type_t **group_cipher**

group cipher of AP

wifi_ant_t **ant**

antenna used to receive beacon from AP

uint32_t **phy_11b**

bit: 0 flag to identify if 11b mode is enabled or not

uint32_t **phy_11g**

bit: 1 flag to identify if 11g mode is enabled or not

uint32_t **phy_11n**

bit: 2 flag to identify if 11n mode is enabled or not

uint32_t **phy_lr**

bit: 3 flag to identify if low rate is enabled or not

uint32_t **wps**

bit: 4 flag to identify if WPS is supported or not

uint32_t **ftm_responder**

bit: 5 flag to identify if FTM is supported in responder mode

uint32_t **ftm_initiator**

bit: 6 flag to identify if FTM is supported in initiator mode

uint32_t **reserved**

bit: 7..31 reserved

wifi_country_t **country**

country information of AP

struct **wifi_scan_threshold_t**

Structure describing parameters for a WiFi fast scan.

Public Members

int8_t **rssi**

The minimum rssi to accept in the fast scan mode

wifi_auth_mode_t **authmode**

The weakest authmode to accept in the fast scan mode

struct **wifi_pmf_config_t**

Configuration structure for Protected Management Frame

Public Members

bool **capable**

Deprecated variable. Device will always connect in PMF mode if other device also advertizes PMF capability.

bool **required**

Advertizes that Protected Management Frame is required. Device will not associate to non-PMF capable devices.

struct **wifi_ap_config_t**

Soft-AP configuration settings for the ESP32.

Public Members

uint8_t **ssid**[32]

SSID of ESP32 soft-AP. If ssid_len field is 0, this must be a Null terminated string. Otherwise, length is set according to ssid_len.

uint8_t **password**[64]

Password of ESP32 soft-AP.

uint8_t **ssid_len**

Optional length of SSID field.

uint8_t **channel**

Channel of ESP32 soft-AP

wifi_auth_mode_t **authmode**

Auth mode of ESP32 soft-AP. Do not support AUTH_WEP in soft-AP mode

uint8_t **ssid_hidden**

Broadcast SSID or not, default 0, broadcast the SSID

uint8_t **max_connection**

Max number of stations allowed to connect in, default 4, max 10

uint16_t **beacon_interval**

Beacon interval which should be multiples of 100. Unit: TU(time unit, 1 TU = 1024 us). Range: 100 ~ 60000. Default value: 100

wifi_cipher_type_t **pairwise_cipher**

pairwise cipher of SoftAP, group cipher will be derived using this. cipher values are valid starting from WIFI_CIPHER_TYPE_TKIP, enum values before that will be considered as invalid and default cipher suites(TKIP+CCMP) will be used. Valid cipher suites in softAP mode are WIFI_CIPHER_TYPE_TKIP, WIFI_CIPHER_TYPE_CCMP and WIFI_CIPHER_TYPE_TKIP_CCMP.

bool **ftm_responder**

Enable FTM Responder mode

struct **wifi_sta_config_t**

STA configuration settings for the ESP32.

Public Members

uint8_t **ssid**[32]

SSID of target AP.

uint8_t **password**[64]

Password of target AP.

wifi_scan_method_t **scan_method**

do all channel scan or fast scan

bool **bssid_set**

whether set MAC address of target AP or not. Generally, station_config.bssid_set needs to be 0; and it needs to be 1 only when users need to check the MAC address of the AP.

uint8_t **bssid**[6]

MAC address of target AP

uint8_t **channel**

channel of target AP. Set to 1~13 to scan starting from the specified channel before connecting to AP. If the channel of AP is unknown, set it to 0.

uint16_t **listen_interval**

Listen interval for ESP32 station to receive beacon when WIFI_PS_MAX_MODEM is set. Units: AP beacon intervals. Defaults to 3 if set to 0.

wifi_sort_method_t **sort_method**

sort the connect AP in the list by rssi or security mode

wifi_scan_threshold_t **threshold**

When sort_method is set, only APs which have an auth mode that is more secure than the selected auth mode and a signal stronger than the minimum RSSI will be used.

wifi_pmf_config_t **pmf_cfg**

Configuration for Protected Management Frame. Will be advertized in RSN Capabilities in RSN IE.

uint32_t **rm_enabled**

Whether Radio Measurements are enabled for the connection

uint32_t **btm_enabled**

Whether BSS Transition Management is enabled for the connection

uint32_t **mbo_enabled**

Whether MBO is enabled for the connection

uint32_t **reserved**

Reserved for future feature set

wifi_sae_pwe_method_t **sae_pwe_h2e**

Whether SAE hash to element is enabled

struct **wifi_sta_info_t**

Description of STA associated with AP.

Public Members

uint8_t **mac**[6]

mac address

int8_t **rssi**

current average rssi of sta connected

uint32_t **phy_11b**

bit: 0 flag to identify if 11b mode is enabled or not

uint32_t **phy_11g**

bit: 1 flag to identify if 11g mode is enabled or not

uint32_t **phy_11n**

bit: 2 flag to identify if 11n mode is enabled or not

uint32_t **phy_lr**

bit: 3 flag to identify if low rate is enabled or not

uint32_t **is_mesh_child**

bit: 4 flag to identify mesh child

uint32_t **reserved**

bit: 5..31 reserved

struct **wifi_sta_list_t**

List of stations associated with the ESP32 Soft-AP.

Public Members

wifi_sta_info_t **sta**[(10)]

station list

int **num**

number of stations in the list (other entries are invalid)

struct **vendor_ie_data_t**

Vendor Information Element header.

The first bytes of the Information Element will match this header. Payload follows.

Public Members

uint8_t **element_id**

Should be set to WIFI_VENDOR_IE_ELEMENT_ID (0xDD)

uint8_t **length**

Length of all bytes in the element data following this field. Minimum 4.

uint8_t **vendor_oui**[3]

Vendor identifier (OUI).

uint8_t **vendor_oui_type**

Vendor-specific OUI type.

uint8_t **payload**[0]

Payload. Length is equal to value in 'length' field, minus 4.

struct **wifi_pkt_rx_ctrl_t**

Received packet radio metadata header, this is the common header at the beginning of all promiscuous mode RX callback buffers.

Public Members

signed **rssi**

Received Signal Strength Indicator(RSSI) of packet. unit: dBm

unsigned **rate**

PHY rate encoding of the packet. Only valid for non HT(11bg) packet

unsigned **__pad0__**

reserved

unsigned **sig_mode**

0: non HT(11bg) packet; 1: HT(11n) packet; 3: VHT(11ac) packet

unsigned **__pad1__**

reserved

unsigned **mcs**

Modulation Coding Scheme. If is HT(11n) packet, shows the modulation, range from 0 to 76(MSC0 ~ MCS76)

unsigned **cwb**

Channel Bandwidth of the packet. 0: 20MHz; 1: 40MHz

unsigned **__pad2__**

reserved

unsigned **smoothing**

reserved

unsigned **not_sounding**

reserved

unsigned **__pad3__**

reserved

unsigned **aggregation**

Aggregation. 0: MPDU packet; 1: AMPDU packet

unsigned **stbc**

Space Time Block Code(STBC). 0: non STBC packet; 1: STBC packet

unsigned **fec_coding**

Flag is set for 11n packets which are LDPC

unsigned **sgi**

Short Guide Interval(SGI). 0: Long GI; 1: Short GI

signed **noise_floor**

noise floor of Radio Frequency Module(RF). unit: dBm

unsigned **ampdu_cnt**

ampdu cnt

unsigned **channel**

primary channel on which this packet is received

unsigned **secondary_channel**

secondary channel on which this packet is received. 0: none; 1: above; 2: below

unsigned **__pad4__**

reserved

unsigned **timestamp**

timestamp. The local time when this packet is received. It is precise only if modem sleep or light sleep is not enabled. unit: microsecond

unsigned **__pad5__**

reserved

unsigned **__pad6__**

reserved

unsigned **ant**

antenna number from which this packet is received. 0: WiFi antenna 0; 1: WiFi antenna 1

unsigned **sig_len**

length of packet including Frame Check Sequence(FCS)

unsigned **__pad7__**

reserved

unsigned **rx_state**

state of the packet. 0: no error; others: error numbers which are not public

struct **wifi_promiscuous_pkt_t**

Payload passed to ‘buf’ parameter of promiscuous mode RX callback.

Public Members

wifi_pkt_rx_ctrl_t **rx_ctrl**

metadata header

uint8_t **payload**[0]

Data or management payload. Length of payload is described by rx_ctrl.sig_len. Type of content determined by packet type argument of callback.

struct **wifi_promiscuous_filter_t**

Mask for filtering different packet types in promiscuous mode.

Public Members

uint32_t **filter_mask**

OR of one or more filter values WIFI_PROMIS_FILTER_*

struct **wifi_csi_config_t**

Channel state information(CSI) configuration type.

Public Members

bool **lltf_en**

enable to receive legacy long training field(lltf) data. Default enabled

bool **htltf_en**

enable to receive HT long training field(htltf) data. Default enabled

bool **stbc_htltf2_en**

enable to receive space time block code HT long training field(stbc-htltf2) data. Default enabled

bool **ltf_merge_en**

enable to generate htlft data by averaging lltf and ht_ltf data when receiving HT packet. Otherwise, use ht_ltf data directly. Default enabled

bool **channel_filter_en**

enable to turn on channel filter to smooth adjacent sub-carrier. Disable it to keep independence of adjacent sub-carrier. Default enabled

bool **manu_scale**

manually scale the CSI data by left shifting or automatically scale the CSI data. If set true, please set the shift bits. false: automatically. true: manually. Default false

uint8_t **shift**

manually left shift bits of the scale of the CSI data. The range of the left shift bits is 0~15

struct **wifi_csi_info_t**

CSI data type.

Public Members

wifi_pkt_rx_ctrl_t **rx_ctrl**

received packet radio metadata header of the CSI data

uint8_t **mac**[6]

source MAC address of the CSI data

bool **first_word_invalid**

first four bytes of the CSI data is invalid or not

int8_t ***buf**

buffer of CSI data

uint16_t **len**

length of CSI data

struct **wifi_ant_gpio_t**

WiFi GPIO configuration for antenna selection.

Public Members

uint8_t **gpio_select**

Whether this GPIO is connected to external antenna switch

uint8_t **gpio_num**

The GPIO number that connects to external antenna switch

struct **wifi_ant_gpio_config_t**

WiFi GPIOs configuration for antenna selection.

Public Members

wifi_ant_gpio_t **gpio_cfg**[4]

The configurations of GPIOs that connect to external antenna switch

struct **wifi_ant_config_t**

WiFi antenna configuration.

Public Members

wifi_ant_mode_t **rx_ant_mode**

WiFi antenna mode for receiving

wifi_ant_t **rx_ant_default**

Default antenna mode for receiving, it’ s ignored if rx_ant_mode is not WIFI_ANT_MODE_AUTO

wifi_ant_mode_t **tx_ant_mode**

WiFi antenna mode for transmission, it can be set to WIFI_ANT_MODE_AUTO only if rx_ant_mode is set to WIFI_ANT_MODE_AUTO

uint8_t **enabled_ant0**

Index (in antenna GPIO configuration) of enabled WIFI_ANT_MODE_ANT0

uint8_t **enabled_ant1**

Index (in antenna GPIO configuration) of enabled WIFI_ANT_MODE_ANT1

struct **wifi_action_tx_req_t**

Action Frame Tx Request.

Public Members

wifi_interface_t **ifx**

WiFi interface to send request to

uint8_t **dest_mac**[6]

Destination MAC address

bool **no_ack**

Indicates no ack required

wifi_action_rx_cb_t **rx_cb**

Rx Callback to receive any response

uint32_t **data_len**

Length of the appended Data

uint8_t **data**[0]

Appended Data payload

struct **wifi_ftm_initiator_cfg_t**

FTM Initiator configuration.

Public Members

uint8_t **resp_mac**[6]

MAC address of the FTM Responder

uint8_t **channel**

Primary channel of the FTM Responder

uint8_t **frm_count**

No. of FTM frames requested in terms of 4 or 8 bursts (allowed values - 0(No pref), 16, 24, 32, 64)

uint16_t **burst_period**

Requested time period between consecutive FTM bursts in 100’ s of milliseconds (0 - No pref)

struct **wifi_event_sta_scan_done_t**

Argument structure for WIFI_EVENT_SCAN_DONE event

Public Members

uint32_t **status**

status of scanning APs: 0 —success, 1 - failure

uint8_t **number**

number of scan results

uint8_t **scan_id**

scan sequence number, used for block scan

struct **wifi_event_sta_connected_t**

Argument structure for WIFI_EVENT_STA_CONNECTED event

Public Members

uint8_t **ssid**[32]

SSID of connected AP

uint8_t **ssid_len**

SSID length of connected AP

uint8_t **bssid**[6]

BSSID of connected AP

uint8_t **channel**

channel of connected AP

wifi_auth_mode_t **authmode**

authentication mode used by AP

struct **wifi_event_sta_disconnected_t**

Argument structure for WIFI_EVENT_STA_DISCONNECTED event

Public Members

uint8_t **ssid**[32]

SSID of disconnected AP

uint8_t **ssid_len**

SSID length of disconnected AP

uint8_t **bssid**[6]

BSSID of disconnected AP

uint8_t **reason**

reason of disconnection

struct **wifi_event_sta_authmode_change_t**

Argument structure for WIFI_EVENT_STA_AUTHMODE_CHANGE event

Public Members

wifi_auth_mode_t **old_mode**

the old auth mode of AP

wifi_auth_mode_t **new_mode**

the new auth mode of AP

struct **wifi_event_sta_wps_er_pin_t**

Argument structure for WIFI_EVENT_STA_WPS_ER_PIN event

Public Members

uint8_t **pin_code**[8]

PIN code of station in enrollee mode

struct **wifi_event_sta_wps_er_success_t**

Argument structure for WIFI_EVENT_STA_WPS_ER_SUCCESS event

Public Members

uint8_t **ap_cred_cnt**

Number of AP credentials received

uint8_t **ssid**[32]

SSID of AP

uint8_t **passphrase**[64]

Passphrase for the AP

struct *wifi_event_sta_wps_er_success_t*::[anonymous] **ap_cred**[3]

All AP credentials received from WPS handshake

struct **wifi_event_ap_staconnected_t**

Argument structure for WIFI_EVENT_AP_STACONNECTED event

Public Members

uint8_t **mac**[6]

MAC address of the station connected to ESP32 soft-AP

uint8_t **aid**

the aid that ESP32 soft-AP gives to the station connected to

bool **is_mesh_child**

flag to identify mesh child

struct **wifi_event_ap_stadisconnected_t**

Argument structure for WIFI_EVENT_AP_STADISCONNECTED event

Public Members

uint8_t **mac**[6]

MAC address of the station disconnects to ESP32 soft-AP

uint8_t **aid**

the aid that ESP32 soft-AP gave to the station disconnects to

bool **is_mesh_child**

flag to identify mesh child

struct **wifi_event_ap_probe_req_rx_t**

Argument structure for WIFI_EVENT_AP_PROBEREQRECVED event

Public Members

int **rssi**

Received probe request signal strength

uint8_t **mac**[6]

MAC address of the station which send probe request

struct **wifi_event_bss_rssi_low_t**

Argument structure for WIFI_EVENT_STA_BSS_RSSI_LOW event

Public Members

int32_t **rssi**

RSSI value of bss

struct **wifi_ftm_report_entry_t**

Argument structure for

Public Members

uint8_t **dlog_token**

Dialog Token of the FTM frame

int8_t **rssi**

RSSI of the FTM frame received

uint32_t **rtt**

Round Trip Time in pSec with a peer

uint64_t **t1**

Time of departure of FTM frame from FTM Responder in pSec

uint64_t **t2**

Time of arrival of FTM frame at FTM Initiator in pSec

uint64_t **t3**

Time of departure of ACK from FTM Initiator in pSec

uint64_t **t4**

Time of arrival of ACK at FTM Responder in pSec

struct **wifi_event_ftm_report_t**

Argument structure for WIFI_EVENT_FTM_REPORT event

Public Members

uint8_t **peer_mac**[6]

MAC address of the FTM Peer

wifi_ftm_status_t **status**

Status of the FTM operation

uint32_t **rtt_raw**

Raw average Round-Trip-Time with peer in Nano-Seconds

uint32_t **rtt_est**

Estimated Round-Trip-Time with peer in Nano-Seconds

uint32_t **dist_est**

Estimated one-way distance in Centi-Meters

wifi_ftm_report_entry_t ***ftm_report_data**

Pointer to FTM Report with multiple entries, should be freed after use

uint8_t **ftm_report_num_entries**

Number of entries in the FTM Report data

struct **wifi_event_action_tx_status_t**

Argument structure for WIFI_EVENT_ACTION_TX_STATUS event

Public Members

wifi_interface_t **ifx**

WiFi interface to send request to

uint32_t **context**

Context to identify the request

uint8_t **da**[6]

Destination MAC address

uint8_t **status**

Status of the operation

struct **wifi_event_roc_done_t**

Argument structure for WIFI_EVENT_ROC_DONE event

Public Members

uint32_t **context**

Context to identify the request

Macros

WIFI_OFFCHAN_TX_REQ

WIFI_OFFCHAN_TX_CANCEL

WIFI_ROC_REQ

WIFI_ROC_CANCEL

WIFI_PROTOCOL_11B

WIFI_PROTOCOL_11G

WIFI_PROTOCOL_11N

WIFI_PROTOCOL_LR

ESP_WIFI_MAX_CONN_NUM

max number of stations which can connect to ESP32 soft-AP

WIFI_VENDOR_IE_ELEMENT_ID

WIFI_PROMIS_FILTER_MASK_ALL

filter all packets

WIFI_PROMIS_FILTER_MASK_MGMT

filter the packets with type of WIFI_PKT_MGMT

WIFI_PROMIS_FILTER_MASK_CTRL

filter the packets with type of WIFI_PKT_CTRL

WIFI_PROMIS_FILTER_MASK_DATA

filter the packets with type of WIFI_PKT_DATA

WIFI_PROMIS_FILTER_MASK_MISC

filter the packets with type of WIFI_PKT_MISC

WIFI_PROMIS_FILTER_MASK_DATA_MPDU

filter the MPDU which is a kind of WIFI_PKT_DATA

WIFI_PROMIS_FILTER_MASK_DATA_AMPDU

filter the AMPDU which is a kind of WIFI_PKT_DATA

WIFI_PROMIS_FILTER_MASK_FCSFAIL

filter the FCS failed packets, do not open it in general

WIFI_PROMIS_CTRL_FILTER_MASK_ALL

filter all control packets

WIFI_PROMIS_CTRL_FILTER_MASK_WRAPPER

filter the control packets with subtype of Control Wrapper

WIFI_PROMIS_CTRL_FILTER_MASK_BAR

filter the control packets with subtype of Block Ack Request

WIFI_PROMIS_CTRL_FILTER_MASK_BA

filter the control packets with subtype of Block Ack

WIFI_PROMIS_CTRL_FILTER_MASK_PSPOLL

filter the control packets with subtype of PS-Poll

WIFI_PROMIS_CTRL_FILTER_MASK_RTS

filter the control packets with subtype of RTS

WIFI_PROMIS_CTRL_FILTER_MASK_CTS

filter the control packets with subtype of CTS

WIFI_PROMIS_CTRL_FILTER_MASK_ACK

filter the control packets with subtype of ACK

WIFI_PROMIS_CTRL_FILTER_MASK_CFEND

filter the control packets with subtype of CF-END

WIFI_PROMIS_CTRL_FILTER_MASK_CFENDACK

filter the control packets with subtype of CF-END+CF-ACK

WIFI_EVENT_MASK_ALL

mask all WiFi events

WIFI_EVENT_MASK_NONE

mask none of the WiFi events

WIFI_EVENT_MASK_AP_PROBEREQRECVED

mask SYSTEM_EVENT_AP_PROBEREQRECVED event

MAX_SSID_LEN

MAX_PASSPHRASE_LEN

MAX_WPS_AP_CRED

WIFI_STATIS_BUFFER

WIFI_STATIS_RXTX

WIFI_STATIS_HW

WIFI_STATIS_DIAG

WIFI_STATIS_PS

WIFI_STATIS_ALL

Type Definitions

typedef int (***wifi_action_rx_cb_t**)(uint8_t *hdr, uint8_t *payload, size_t len, uint8_t channel)

The Rx callback function of Action Tx operations.

Param hdr pointer to the IEEE 802.11 Header structure
Param payload pointer to the Payload following 802.11 Header
Param len length of the Payload
Param channel channel number the frame is received on

Enumerations

enum **wifi_mode_t**

Values:

enumerator **WIFI_MODE_NULL**

null mode

enumerator **WIFI_MODE_STA**

WiFi station mode

enumerator **WIFI_MODE_AP**

WiFi soft-AP mode

enumerator **WIFI_MODE_APSTA**

WiFi station + soft-AP mode

enumerator **WIFI_MODE_MAX**

enum **wifi_interface_t**

Values:

enumerator **WIFI_IF_STA**

enumerator **WIFI_IF_AP**

enum **wifi_country_policy_t**

Values:

enumerator **WIFI_COUNTRY_POLICY_AUTO**

Country policy is auto, use the country info of AP to which the station is connected

enumerator **WIFI_COUNTRY_POLICY_MANUAL**

Country policy is manual, always use the configured country info

enum **wifi_auth_mode_t**

Values:

enumerator **WIFI_AUTH_OPEN**

authenticate mode : open

enumerator **WIFI_AUTH_WEP**

authenticate mode : WEP

enumerator **WIFI_AUTH_WPA_PSK**

authenticate mode : WPA_PSK

enumerator **WIFI_AUTH_WPA2_PSK**

authenticate mode : WPA2_PSK

enumerator **WIFI_AUTH_WPA_WPA2_PSK**

authenticate mode : WPA_WPA2_PSK

enumerator **WIFI_AUTH_WPA2_ENTERPRISE**

authenticate mode : WPA2_ENTERPRISE

enumerator **WIFI_AUTH_WPA3_PSK**

authenticate mode : WPA3_PSK

enumerator **WIFI_AUTH_WPA2_WPA3_PSK**

authenticate mode : WPA2_WPA3_PSK

enumerator **WIFI_AUTH_WAPI_PSK**

authenticate mode : WAPI_PSK

enumerator **WIFI_AUTH_MAX**

enum **wifi_err_reason_t**

Values:

enumerator **WIFI_REASON_UNSPECIFIED**

enumerator **WIFI_REASON_AUTH_EXPIRE**

enumerator **WIFI_REASON_AUTH_LEAVE**

enumerator **WIFI_REASON_ASSOC_EXPIRE**

enumerator **WIFI_REASON_ASSOC_TOOMANY**

enumerator **WIFI_REASON_NOT_AUTHED**

enumerator **WIFI_REASON_NOT_ASSOCED**

enumerator **WIFI_REASON_ASSOC_LEAVE**

enumerator **WIFI_REASON_ASSOC_NOT_AUTHED**

enumerator **WIFI_REASON_DISASSOC_PWRCAP_BAD**

enumerator **WIFI_REASON_DISASSOC_SUPCHAN_BAD**

enumerator **WIFI_REASON_BSS_TRANSITION_DISASSOC**

enumerator **WIFI_REASON_IE_INVALID**

enumerator **WIFI_REASON_MIC_FAILURE**

enumerator **WIFI_REASON_4WAY_HANDSHAKE_TIMEOUT**

enumerator **WIFI_REASON_GROUP_KEY_UPDATE_TIMEOUT**

enumerator **WIFI_REASON_IE_IN_4WAY_DIFFERS**

enumerator **WIFI_REASON_GROUP_CIPHER_INVALID**

enumerator **WIFI_REASON_PAIRWISE_CIPHER_INVALID**

enumerator **WIFI_REASON_AKMP_INVALID**

enumerator **WIFI_REASON_UNSUPP_RSN_IE_VERSION**

enumerator **WIFI_REASON_INVALID_RSN_IE_CAP**

enumerator **WIFI_REASON_802_1X_AUTH_FAILED**

enumerator **WIFI_REASON_CIPHER_SUITE_REJECTED**

enumerator **WIFI_REASON_INVALID_PMKID**

enumerator **WIFI_REASON_BEACON_TIMEOUT**

enumerator **WIFI_REASON_NO_AP_FOUND**

enumerator **WIFI_REASON_AUTH_FAIL**

enumerator **WIFI_REASON_ASSOC_FAIL**

enumerator **WIFI_REASON_HANDSHAKE_TIMEOUT**

enumerator **WIFI_REASON_CONNECTION_FAIL**

enumerator **WIFI_REASON_AP_TSF_RESET**

enumerator **WIFI_REASON_ROAMING**

enum **wifi_second_chan_t**

Values:

enumerator **WIFI_SECOND_CHAN_NONE**

the channel width is HT20

enumerator **WIFI_SECOND_CHAN_ABOVE**

the channel width is HT40 and the secondary channel is above the primary channel

enumerator **WIFI_SECOND_CHAN_BELOW**

the channel width is HT40 and the secondary channel is below the primary channel

enum **wifi_scan_type_t**

Values:

enumerator **WIFI_SCAN_TYPE_ACTIVE**

active scan

enumerator **WIFI_SCAN_TYPE_PASSIVE**

passive scan

enum **wifi_cipher_type_t**

Values:

enumerator **WIFI_CIPHER_TYPE_NONE**

the cipher type is none

enumerator **WIFI_CIPHER_TYPE_WEP40**

the cipher type is WEP40

enumerator **WIFI_CIPHER_TYPE_WEP104**

the cipher type is WEP104

enumerator **WIFI_CIPHER_TYPE_TKIP**

the cipher type is TKIP

enumerator **WIFI_CIPHER_TYPE_CCMP**

the cipher type is CCMP

enumerator **WIFI_CIPHER_TYPE_TKIP_CCMP**

the cipher type is TKIP and CCMP

enumerator **WIFI_CIPHER_TYPE_AES_CMAC128**

the cipher type is AES-CMAC-128

enumerator **WIFI_CIPHER_TYPE_SMS4**

the cipher type is SMS4

enumerator **WIFI_CIPHER_TYPE_GCMP**

the cipher type is GCMP

enumerator **WIFI_CIPHER_TYPE_GCMP256**

the cipher type is GCMP-256

enumerator **WIFI_CIPHER_TYPE_AES_GMAC128**

the cipher type is AES-GMAC-128

enumerator **WIFI_CIPHER_TYPE_AES_GMAC256**

the cipher type is AES-GMAC-256

enumerator **WIFI_CIPHER_TYPE_UNKNOWN**

the cipher type is unknown

enum **wifi_ant_t**

WiFi antenna.

Values:

enumerator **WIFI_ANT_ANT0**

WiFi antenna 0

enumerator **WIFI_ANT_ANT1**

WiFi antenna 1

enumerator **WIFI_ANT_MAX**

Invalid WiFi antenna

enum **wifi_scan_method_t**

Values:

enumerator **WIFI_FAST_SCAN**

Do fast scan, scan will end after find SSID match AP

enumerator **WIFI_ALL_CHANNEL_SCAN**

All channel scan, scan will end after scan all the channel

enum **wifi_sort_method_t**

Values:

enumerator **WIFI_CONNECT_AP_BY_SIGNAL**

Sort match AP in scan list by RSSI

enumerator **WIFI_CONNECT_AP_BY_SECURITY**

Sort match AP in scan list by security mode

enum **wifi_ps_type_t**

Values:

enumerator **WIFI_PS_NONE**

No power save

enumerator **WIFI_PS_MIN_MODEM**

Minimum modem power saving. In this mode, station wakes up to receive beacon every DTIM period

enumerator **WIFI_PS_MAX_MODEM**

Maximum modem power saving. In this mode, interval to receive beacons is determined by the listen_interval parameter in *wifi_sta_config_t*

enum **wifi_bandwidth_t**

Values:

enumerator **WIFI_BW_HT20**

enumerator **WIFI_BW_HT40**

enum **wifi_sae_pwe_method_t**

Configuration for SAE PWE derivation

Values:

enumerator **WPA3_SAE_PWE_UNSPECIFIED**

enumerator **WPA3_SAE_PWE_HUNT_AND_PECK**

enumerator **WPA3_SAE_PWE_HASH_TO_ELEMENT**

enumerator **WPA3_SAE_PWE_BOTH**

enum **wifi_storage_t**

Values:

enumerator **WIFI_STORAGE_FLASH**

all configuration will store in both memory and flash

enumerator **WIFI_STORAGE_RAM**

all configuration will only store in the memory

enum **wifi_vendor_ie_type_t**

Vendor Information Element type.

Determines the frame type that the IE will be associated with.

Values:

enumerator **WIFI_VND_IE_TYPE_BEACON**

enumerator **WIFI_VND_IE_TYPE_PROBE_REQ**

enumerator **WIFI_VND_IE_TYPE_PROBE_RESP**

enumerator **WIFI_VND_IE_TYPE_ASSOC_REQ**

enumerator **WIFI_VND_IE_TYPE_ASSOC_RESP**

enum **wifi_vendor_ie_id_t**

Vendor Information Element index.

Each IE type can have up to two associated vendor ID elements.

Values:

enumerator **WIFI_VND_IE_ID_0**

enumerator **WIFI_VND_IE_ID_1**

enum **wifi_promiscuous_pkt_type_t**

Promiscuous frame type.

Passed to promiscuous mode RX callback to indicate the type of parameter in the buffer.

Values:

enumerator **WIFI_PKT_MGMT**

Management frame, indicates ‘buf’ argument is *wifi_promiscuous_pkt_t*

enumerator **WIFI_PKT_CTRL**

Control frame, indicates ‘buf’ argument is *wifi_promiscuous_pkt_t*

enumerator **WIFI_PKT_DATA**

Data frame, indiciates ‘buf’ argument is *wifi_promiscuous_pkt_t*

enumerator **WIFI_PKT_MISC**

Other type, such as MIMO etc. ‘buf’ argument is *wifi_promiscuous_pkt_t* but the payload is zero length.

enum **wifi_ant_mode_t**

WiFi antenna mode.

Values:

enumerator **WIFI_ANT_MODE_ANT0**

Enable WiFi antenna 0 only

enumerator **WIFI_ANT_MODE_ANT1**

Enable WiFi antenna 1 only

enumerator **WIFI_ANT_MODE_AUTO**

Enable WiFi antenna 0 and 1, automatically select an antenna

enumerator **WIFI_ANT_MODE_MAX**

Invalid WiFi enabled antenna

enum **wifi_phy_rate_t**

WiFi PHY rate encodings.

Values:

enumerator **WIFI_PHY_RATE_1M_L**

1 Mbps with long preamble

enumerator **WIFI_PHY_RATE_2M_L**

2 Mbps with long preamble

enumerator **WIFI_PHY_RATE_5M_L**

5.5 Mbps with long preamble

enumerator **WIFI_PHY_RATE_11M_L**

11 Mbps with long preamble

enumerator **WIFI_PHY_RATE_2M_S**

2 Mbps with short preamble

enumerator **WIFI_PHY_RATE_5M_S**

5.5 Mbps with short preamble

enumerator **WIFI_PHY_RATE_11M_S**

11 Mbps with short preamble

enumerator **WIFI_PHY_RATE_48M**

48 Mbps

enumerator **WIFI_PHY_RATE_24M**

24 Mbps

enumerator **WIFI_PHY_RATE_12M**

12 Mbps

enumerator **WIFI_PHY_RATE_6M**

6 Mbps

enumerator **WIFI_PHY_RATE_54M**

54 Mbps

enumerator **WIFI_PHY_RATE_36M**

36 Mbps

enumerator **WIFI_PHY_RATE_18M**

18 Mbps

enumerator **WIFI_PHY_RATE_9M**

9 Mbps

enumerator **WIFI_PHY_RATE_MCS0_LGI**

MCS0 with long GI, 6.5 Mbps for 20MHz, 13.5 Mbps for 40MHz

enumerator **WIFI_PHY_RATE_MCS1_LGI**

MCS1 with long GI, 13 Mbps for 20MHz, 27 Mbps for 40MHz

enumerator **WIFI_PHY_RATE_MCS2_LGI**

MCS2 with long GI, 19.5 Mbps for 20MHz, 40.5 Mbps for 40MHz

enumerator **WIFI_PHY_RATE_MCS3_LGI**

MCS3 with long GI, 26 Mbps for 20MHz, 54 Mbps for 40MHz

enumerator **WIFI_PHY_RATE_MCS4_LGI**

MCS4 with long GI, 39 Mbps for 20MHz, 81 Mbps for 40MHz

enumerator **WIFI_PHY_RATE_MCS5_LGI**

MCS5 with long GI, 52 Mbps for 20MHz, 108 Mbps for 40MHz

enumerator **WIFI_PHY_RATE_MCS6_LGI**

MCS6 with long GI, 58.5 Mbps for 20MHz, 121.5 Mbps for 40MHz

enumerator **WIFI_PHY_RATE_MCS7_LGI**

MCS7 with long GI, 65 Mbps for 20MHz, 135 Mbps for 40MHz

enumerator **WIFI_PHY_RATE_MCS0_SGI**

MCS0 with short GI, 7.2 Mbps for 20MHz, 15 Mbps for 40MHz

enumerator **WIFI_PHY_RATE_MCS1_SGI**

MCS1 with short GI, 14.4 Mbps for 20MHz, 30 Mbps for 40MHz

enumerator **WIFI_PHY_RATE_MCS2_SGI**

MCS2 with short GI, 21.7 Mbps for 20MHz, 45 Mbps for 40MHz

enumerator **WIFI_PHY_RATE_MCS3_SGI**

MCS3 with short GI, 28.9 Mbps for 20MHz, 60 Mbps for 40MHz

enumerator **WIFI_PHY_RATE_MCS4_SGI**

MCS4 with short GI, 43.3 Mbps for 20MHz, 90 Mbps for 40MHz

enumerator **WIFI_PHY_RATE_MCS5_SGI**

MCS5 with short GI, 57.8 Mbps for 20MHz, 120 Mbps for 40MHz

enumerator **WIFI_PHY_RATE_MCS6_SGI**

MCS6 with short GI, 65 Mbps for 20MHz, 135 Mbps for 40MHz

enumerator **WIFI_PHY_RATE_MCS7_SGI**

MCS7 with short GI, 72.2 Mbps for 20MHz, 150 Mbps for 40MHz

enumerator **WIFI_PHY_RATE_LORA_250K**

250 Kbps

enumerator **WIFI_PHY_RATE_LORA_500K**

500 Kbps

enumerator **WIFI_PHY_RATE_MAX**

enum **wifi_event_t**

WiFi event declarations

Values:

enumerator **WIFI_EVENT_WIFI_READY**

ESP32 WiFi ready

enumerator **WIFI_EVENT_SCAN_DONE**

ESP32 finish scanning AP

enumerator **WIFI_EVENT_STA_START**

ESP32 station start

enumerator **WIFI_EVENT_STA_STOP**

ESP32 station stop

enumerator **WIFI_EVENT_STA_CONNECTED**

ESP32 station connected to AP

enumerator **WIFI_EVENT_STA_DISCONNECTED**

ESP32 station disconnected from AP

enumerator **WIFI_EVENT_STA_AUTHMODE_CHANGE**
the auth mode of AP connected by ESP32 station changed

enumerator **WIFI_EVENT_STA_WPS_ER_SUCCESS**
ESP32 station wps succeeds in enrollee mode

enumerator **WIFI_EVENT_STA_WPS_ER_FAILED**
ESP32 station wps fails in enrollee mode

enumerator **WIFI_EVENT_STA_WPS_ER_TIMEOUT**
ESP32 station wps timeout in enrollee mode

enumerator **WIFI_EVENT_STA_WPS_ER_PIN**
ESP32 station wps pin code in enrollee mode

enumerator **WIFI_EVENT_STA_WPS_ER_PBC_OVERLAP**
ESP32 station wps overlap in enrollee mode

enumerator **WIFI_EVENT_AP_START**
ESP32 soft-AP start

enumerator **WIFI_EVENT_AP_STOP**
ESP32 soft-AP stop

enumerator **WIFI_EVENT_AP_STACONNECTED**
a station connected to ESP32 soft-AP

enumerator **WIFI_EVENT_AP_STADISCONNECTED**
a station disconnected from ESP32 soft-AP

enumerator **WIFI_EVENT_AP_PROBEREQRECVED**
Receive probe request packet in soft-AP interface

enumerator **WIFI_EVENT_FTM_REPORT**
Receive report of FTM procedure

enumerator **WIFI_EVENT_STA_BSS_RSSI_LOW**
AP’s RSSI crossed configured threshold

enumerator **WIFI_EVENT_ACTION_TX_STATUS**
Status indication of Action Tx operation

enumerator **WIFI_EVENT_ROC_DONE**
Remain-on-Channel operation complete

enumerator **WIFI_EVENT_STA_BEACON_TIMEOUT**
ESP32 station beacon timeout

enumerator **WIFI_EVENT_MAX**

Invalid WiFi event ID

enum **wifi_event_sta_wps_fail_reason_t**

Argument structure for WIFI_EVENT_STA_WPS_ER_FAILED event

Values:

enumerator **WPS_FAIL_REASON_NORMAL**

ESP32 WPS normal fail reason

enumerator **WPS_FAIL_REASON_RECV_M2D**

ESP32 WPS receive M2D frame

enumerator **WPS_FAIL_REASON_MAX**

enum **wifi_ftm_status_t**

FTM operation status types.

Values:

enumerator **FTM_STATUS_SUCCESS**

FTM exchange is successful

enumerator **FTM_STATUS_UNSUPPORTED**

Peer does not support FTM

enumerator **FTM_STATUS_CONF_REJECTED**

Peer rejected FTM configuration in FTM Request

enumerator **FTM_STATUS_NO_RESPONSE**

Peer did not respond to FTM Requests

enumerator **FTM_STATUS_FAIL**

Unknown error during FTM exchange

SmartConfig

The SmartConfig™ is a provisioning technology developed by TI to connect a new Wi-Fi device to a Wi-Fi network. It uses a mobile app to broadcast the network credentials from a smartphone, or a tablet, to an un-provisioned Wi-Fi device.

The advantage of this technology is that the device does not need to directly know SSID or password of an Access Point (AP). This information is provided using the smartphone. This is particularly important to headless device and systems, due to their lack of a user interface.

If you are looking for other options to provision your ESP32 devices, check *Provisioning API*.

Application Example Connect ESP32 to target AP using SmartConfig: wifi/smart_config.

API Reference

Header File

- components/esp_wifi/include/esp_smartconfig.h

Functions

const char ***esp_smartconfig_get_version**(void)

Get the version of SmartConfig.

Returns
- SmartConfig version const char.

esp_err_t **esp_smartconfig_start**(const *smartconfig_start_config_t* *config)

Start SmartConfig, config ESP device to connect AP. You need to broadcast information by phone APP. Device sniffer special packets from the air that containing SSID and password of target AP.

Attention 1. This API can be called in station or softAP-station mode.
Attention 2. Can not call esp_smartconfig_start twice before it finish, please call esp_smartconfig_stop first.

Parameters **config** –pointer to smartconfig start configure structure
Returns
- ESP_OK: succeed
- others: fail

esp_err_t **esp_smartconfig_stop**(void)

Stop SmartConfig, free the buffer taken by esp_smartconfig_start.

Attention Whether connect to AP succeed or not, this API should be called to free memory taken by smartconfig_start.

Returns
- ESP_OK: succeed
- others: fail

esp_err_t **esp_esptouch_set_timeout**(uint8_t time_s)

Set timeout of SmartConfig process.

Attention Timing starts from SC_STATUS_FIND_CHANNEL status. SmartConfig will restart if timeout.

Parameters **time_s** –range 15s~255s, offset:45s.
Returns
- ESP_OK: succeed
- others: fail

esp_err_t **esp_smartconfig_set_type**(*smartconfig_type_t* type)

Set protocol type of SmartConfig.

Attention If users need to set the SmartConfig type, please set it before calling esp_smartconfig_start.

Parameters **type** –Choose from the smartconfig_type_t.
Returns
- ESP_OK: succeed
- others: fail

esp_err_t **esp_smartconfig_fast_mode**(bool enable)

Set mode of SmartConfig. default normal mode.

Attention 1. Please call it before API esp_smartconfig_start.
Attention 2. Fast mode have corresponding APP(phone).
Attention 3. Two mode is compatible.

Parameters **enable** –false-disable(default); true-enable;
Returns
- ESP_OK: succeed
- others: fail

esp_err_t **esp_smartconfig_get_rvd_data**(uint8_t *rvd_data, uint8_t len)

Get reserved data of ESPTouch v2.

Parameters
- **rvd_data** –reserved data
- **len** –length of reserved data

Returns
- ESP_OK: succeed
- others: fail

Structures

struct **smartconfig_event_got_ssid_pswd_t**

Argument structure for SC_EVENT_GOT_SSID_PSWD event

Public Members

uint8_t **ssid**[32]

SSID of the AP. Null terminated string.

uint8_t **password**[64]

Password of the AP. Null terminated string.

bool **bssid_set**

whether set MAC address of target AP or not.

uint8_t **bssid**[6]

MAC address of target AP.

smartconfig_type_t **type**

Type of smartconfig(ESPTouch or AirKiss).

uint8_t **token**

Token from cellphone which is used to send ACK to cellphone.

uint8_t **cellphone_ip**[4]

IP address of cellphone.

struct **smartconfig_start_config_t**

Configure structure for esp_smartconfig_start

Public Members

bool **enable_log**
Enable smartconfig logs.

bool **esp_touch_v2_enable_crypt**
Enable ESPTouch v2 crypt.

char ***esp_touch_v2_key**
ESPTouch v2 crypt key, len should be 16.

Macros

SMARTCONFIG_START_CONFIG_DEFAULT()

Enumerations

enum **smartconfig_type_t**
Values:

enumerator **SC_TYPE_ESPTOUCH**
protocol: ESPTouch

enumerator **SC_TYPE_AIRKISS**
protocol: AirKiss

enumerator **SC_TYPE_ESPTOUCH_AIRKISS**
protocol: ESPTouch and AirKiss

enumerator **SC_TYPE_ESPTOUCH_V2**
protocol: ESPTouch v2

enum **smartconfig_event_t**
Smartconfig event declarations
Values:

enumerator **SC_EVENT_SCAN_DONE**
ESP32 station smartconfig has finished to scan for APs

enumerator **SC_EVENT_FOUND_CHANNEL**
ESP32 station smartconfig has found the channel of the target AP

enumerator **SC_EVENT_GOT_SSID_PSWD**
ESP32 station smartconfig got the SSID and password

enumerator **SC_EVENT_SEND_ACK_DONE**
ESP32 station smartconfig has sent ACK to cellphone

ESP-NOW

Overview ESP-NOW is a kind of connectionless Wi-Fi communication protocol that is defined by Espressif. In ESP-NOW, application data is encapsulated in a vendor-specific action frame and then transmitted from one Wi-Fi device to another without connection. CTR with CBC-MAC Protocol(CCMP) is used to protect the action frame for security. ESP-NOW is widely used in smart light, remote controlling, sensor, etc.

Frame Format ESP-NOW uses a vendor-specific action frame to transmit ESP-NOW data. The default ESP-NOW bit rate is 1 Mbps. The format of the vendor-specific action frame is as follows:

```
------------------------------------------------------------------------------------------
↪-------------------------
| MAC Header | Category Code | Organization Identifier | Random Values | Vendor␣
↪Specific Content |   FCS   |
------------------------------------------------------------------------------------------
↪-------------------------
  24 bytes         1 byte              3 bytes               4 bytes             7~
↪255 bytes        4 bytes
```

- Category Code: The Category Code field is set to the value(127) indicating the vendor-specific category.
- Organization Identifier: The Organization Identifier contains a unique identifier (0x18fe34), which is the first three bytes of MAC address applied by Espressif.
- Random Value: The Random Value filed is used to prevents relay attacks.
- Vendor Specific Content: The Vendor Specific Content contains vendor-specific fields as follows:

```
-------------------------------------------------------------------------------
| Element ID | Length | Organization Identifier | Type | Version |    Body    |
-------------------------------------------------------------------------------
    1 byte     1 byte            3 bytes         1 byte   1 byte   0~250 bytes
```

- Element ID: The Element ID field is set to the value (221), indicating the vendor-specific element.
- Length: The length is the total length of Organization Identifier, Type, Version and Body.
- Organization Identifier: The Organization Identifier contains a unique identifier(0x18fe34), which is the first three bytes of MAC address applied by Espressif.
- Type: The Type field is set to the value (4) indicating ESP-NOW.
- Version: The Version field is set to the version of ESP-NOW.
- Body: The Body contains the ESP-NOW data.

As ESP-NOW is connectionless, the MAC header is a little different from that of standard frames. The FromDS and ToDS bits of FrameControl field are both 0. The first address field is set to the destination address. The second address field is set to the source address. The third address field is set to broadcast address (0xff:0xff:0xff:0xff:0xff:0xff).

Security

ESP-NOW uses the CCMP method, which is described in IEEE Std. 802.11-2012, to protect the vendor-specific action frame

- PMK is used to encrypt LMK with the AES-128 algorithm. Call *esp_now_set_pmk()* to set PMK. If PMK is not set, a default PMK will be used.
- LMK of the paired device is used to encrypt the vendor-specific action frame with the CCMP method. The maximum number of different LMKs is six. If the LMK of the paired device is not set, the vendor-specific action frame will not be encrypted.

Encrypting multicast vendor-specific action frame is not supported.

Initialization and De-initialization Call *esp_now_init()* to initialize ESP-NOW and *esp_now_deinit()* to de-initialize ESP-NOW. ESP-NOW data must be transmitted after Wi-Fi is started, so it is recommended to start Wi-Fi before initializing ESP-NOW and stop Wi-Fi after de-initializing ESP-NOW. When *esp_now_deinit()* is called, all of the information of paired devices will be deleted.

Add Paired Device Call `esp_now_add_peer()` to add the device to the paired device list before you send data to this device. If security is enabled, the LMK must be set. You can send ESP-NOW data via both the Station and the SoftAP interface. Make sure that the interface is enabled before sending ESP-NOW data.

The maximum number of paired devices is 20, and the paired encryption devices are no more than 16, the default is 6.

A device with a broadcast MAC address must be added before sending broadcast data. The range of the channel of paired devices is from 0 to 14. If the channel is set to 0, data will be sent on the current channel. Otherwise, the channel must be set as the channel that the local device is on.

Send ESP-NOW Data Call `esp_now_send()` to send ESP-NOW data and `esp_now_register_send_cb()` to register sending callback function. It will return *ESP_NOW_SEND_SUCCESS* in sending callback function if the data is received successfully on the MAC layer. Otherwise, it will return *ESP_NOW_SEND_FAIL*. Several reasons can lead to ESP-NOW fails to send data. For example, the destination device doesn't exist; the channels of the devices are not the same; the action frame is lost when transmitting on the air, etc. It is not guaranteed that application layer can receive the data. If necessary, send back ack data when receiving ESP-NOW data. If receiving ack data timeouts, retransmit the ESP-NOW data. A sequence number can also be assigned to ESP-NOW data to drop the duplicate data.

If there is a lot of ESP-NOW data to send, call `esp_now_send()` to send less than or equal to 250 bytes of data once a time. Note that too short interval between sending two ESP-NOW data may lead to disorder of sending callback function. So, it is recommended that sending the next ESP-NOW data after the sending callback function of the previous sending has returned. The sending callback function runs from a high-priority Wi-Fi task. So, do not do lengthy operations in the callback function. Instead, post the necessary data to a queue and handle it from a lower priority task.

Receiving ESP-NOW Data Call `esp_now_register_recv_cb()` to register receiving callback function. Call the receiving callback function when receiving ESP-NOW. The receiving callback function also runs from the Wi-Fi task. So, do not do lengthy operations in the callback function. Instead, post the necessary data to a queue and handle it from a lower priority task.

Config ESP-NOW Rate Call `esp_wifi_config_espnow_rate()` to config ESPNOW rate of specified interface. Make sure that the interface is enabled before config rate. This API should be called after `esp_wifi_start()`.

Application Examples

- Example of sending and receiving ESP-NOW data between two devices: wifi/espnow.
- For more application examples of how to use ESP-NOW, please visit ESP-NOW repository.

API Reference

Header File

- components/esp_wifi/include/esp_now.h

Functions

esp_err_t **esp_now_init** (void)

Initialize ESPNOW function.

Returns

- ESP_OK : succeed
- ESP_ERR_ESPNOW_INTERNAL : Internal error

esp_err_t **esp_now_deinit** (void)

De-initialize ESPNOW function.

Returns
- ESP_OK : succeed

esp_err_t **esp_now_get_version** (uint32_t *version)

Get the version of ESPNOW.

Parameters **version** –ESPNOW version
Returns
- ESP_OK : succeed
- ESP_ERR_ESPNOW_ARG : invalid argument

esp_err_t **esp_now_register_recv_cb** (*esp_now_recv_cb_t* cb)

Register callback function of receiving ESPNOW data.

Parameters **cb** –callback function of receiving ESPNOW data
Returns
- ESP_OK : succeed
- ESP_ERR_ESPNOW_NOT_INIT : ESPNOW is not initialized
- ESP_ERR_ESPNOW_INTERNAL : internal error

esp_err_t **esp_now_unregister_recv_cb** (void)

Unregister callback function of receiving ESPNOW data.

Returns
- ESP_OK : succeed
- ESP_ERR_ESPNOW_NOT_INIT : ESPNOW is not initialized

esp_err_t **esp_now_register_send_cb** (*esp_now_send_cb_t* cb)

Register callback function of sending ESPNOW data.

Parameters **cb** –callback function of sending ESPNOW data
Returns
- ESP_OK : succeed
- ESP_ERR_ESPNOW_NOT_INIT : ESPNOW is not initialized
- ESP_ERR_ESPNOW_INTERNAL : internal error

esp_err_t **esp_now_unregister_send_cb** (void)

Unregister callback function of sending ESPNOW data.

Returns
- ESP_OK : succeed
- ESP_ERR_ESPNOW_NOT_INIT : ESPNOW is not initialized

esp_err_t **esp_now_send** (const uint8_t *peer_addr, const uint8_t *data, size_t len)

Send ESPNOW data.

Attention 1. If peer_addr is not NULL, send data to the peer whose MAC address matches peer_addr
Attention 2. If peer_addr is NULL, send data to all of the peers that are added to the peer list
Attention 3. The maximum length of data must be less than ESP_NOW_MAX_DATA_LEN
Attention 4. The buffer pointed to by data argument does not need to be valid after esp_now_send returns

Parameters
- **peer_addr** –peer MAC address
- **data** –data to send
- **len** –length of data

Returns
- ESP_OK : succeed
- ESP_ERR_ESPNOW_NOT_INIT : ESPNOW is not initialized

- ESP_ERR_ESPNOW_ARG : invalid argument
- ESP_ERR_ESPNOW_INTERNAL : internal error
- ESP_ERR_ESPNOW_NO_MEM : out of memory, when this happens, you can delay a while before sending the next data
- ESP_ERR_ESPNOW_NOT_FOUND : peer is not found
- ESP_ERR_ESPNOW_IF : current WiFi interface doesn't match that of peer

esp_err_t **esp_now_add_peer**(const *esp_now_peer_info_t* *peer)

Add a peer to peer list.

Parameters **peer** –peer information

Returns

- ESP_OK : succeed
- ESP_ERR_ESPNOW_NOT_INIT : ESPNOW is not initialized
- ESP_ERR_ESPNOW_ARG : invalid argument
- ESP_ERR_ESPNOW_FULL : peer list is full
- ESP_ERR_ESPNOW_NO_MEM : out of memory
- ESP_ERR_ESPNOW_EXIST : peer has existed

esp_err_t **esp_now_del_peer**(const uint8_t *peer_addr)

Delete a peer from peer list.

Parameters **peer_addr** –peer MAC address

Returns

- ESP_OK : succeed
- ESP_ERR_ESPNOW_NOT_INIT : ESPNOW is not initialized
- ESP_ERR_ESPNOW_ARG : invalid argument
- ESP_ERR_ESPNOW_NOT_FOUND : peer is not found

esp_err_t **esp_now_mod_peer**(const *esp_now_peer_info_t* *peer)

Modify a peer.

Parameters **peer** –peer information

Returns

- ESP_OK : succeed
- ESP_ERR_ESPNOW_NOT_INIT : ESPNOW is not initialized
- ESP_ERR_ESPNOW_ARG : invalid argument
- ESP_ERR_ESPNOW_FULL : peer list is full

esp_err_t **esp_wifi_config_espnow_rate**(*wifi_interface_t* ifx, *wifi_phy_rate_t* rate)

Config ESPNOW rate of specified interface.

Attention 1. This API should be called after esp_wifi_start().

Parameters

- **ifx** –Interface to be configured.
- **rate** –Phy rate to be configured.

Returns

- ESP_OK: succeed
- others: failed

esp_err_t **esp_now_get_peer**(const uint8_t *peer_addr, *esp_now_peer_info_t* *peer)

Get a peer whose MAC address matches peer_addr from peer list.

Parameters

- **peer_addr** –peer MAC address
- **peer** –peer information

Returns

- ESP_OK : succeed

- ESP_ERR_ESPNOW_NOT_INIT : ESPNOW is not initialized
- ESP_ERR_ESPNOW_ARG : invalid argument
- ESP_ERR_ESPNOW_NOT_FOUND : peer is not found

esp_err_t **esp_now_fetch_peer**(bool from_head, *esp_now_peer_info_t* *peer)

Fetch a peer from peer list. Only return the peer which address is unicast, for the multicast/broadcast address, the function will ignore and try to find the next in the peer list.

Parameters
- **from_head** –fetch from head of list or not
- **peer** –peer information

Returns
- ESP_OK : succeed
- ESP_ERR_ESPNOW_NOT_INIT : ESPNOW is not initialized
- ESP_ERR_ESPNOW_ARG : invalid argument
- ESP_ERR_ESPNOW_NOT_FOUND : peer is not found

bool **esp_now_is_peer_exist**(const uint8_t *peer_addr)

Peer exists or not.

Parameters **peer_addr** –peer MAC address

Returns
- true : peer exists
- false : peer not exists

esp_err_t **esp_now_get_peer_num**(*esp_now_peer_num_t* *num)

Get the number of peers.

Parameters **num** –number of peers

Returns
- ESP_OK : succeed
- ESP_ERR_ESPNOW_NOT_INIT : ESPNOW is not initialized
- ESP_ERR_ESPNOW_ARG : invalid argument

esp_err_t **esp_now_set_pmk**(const uint8_t *pmk)

Set the primary master key.

Attention 1. primary master key is used to encrypt local master key

Parameters **pmk** –primary master key

Returns
- ESP_OK : succeed
- ESP_ERR_ESPNOW_NOT_INIT : ESPNOW is not initialized
- ESP_ERR_ESPNOW_ARG : invalid argument

esp_err_t **esp_now_set_wake_window**(uint16_t window)

Set esp_now wake window for sta_disconnected power management.

Attention 1. Only when ESP_WIFI_STA_DISCONNECTED_PM_ENABLE is enabled, this configuration could work

Attention 2. This configuration only work for station mode and disconnected status

Attention 3. If more than one module has configured its wake_window, chip would choose the largest one to stay waked

Attention 4. If the gap between interval and window is smaller than 5ms, the chip would keep waked all the time

Attention 5. If never configured wake_window, the chip would keep waked at disconnected once it uses esp_now

Parameters **window** –how much microsecond would the chip keep waked each interval, vary from 0 to 65535

Returns

- ESP_OK : succeed
- ESP_ERR_ESPNOW_NOT_INIT : ESPNOW is not initialized

Structures

struct **esp_now_peer_info**

ESPNOW peer information parameters.

Public Members

uint8_t **peer_addr**[6]

ESPNOW peer MAC address that is also the MAC address of station or softap

uint8_t **lmk**[16]

ESPNOW peer local master key that is used to encrypt data

uint8_t **channel**

Wi-Fi channel that peer uses to send/receive ESPNOW data. If the value is 0, use the current channel which station or softap is on. Otherwise, it must be set as the channel that station or softap is on.

wifi_interface_t **ifidx**

Wi-Fi interface that peer uses to send/receive ESPNOW data

bool **encrypt**

ESPNOW data that this peer sends/receives is encrypted or not

void ***priv**

ESPNOW peer private data

struct **esp_now_peer_num**

Number of ESPNOW peers which exist currently.

Public Members

int **total_num**

Total number of ESPNOW peers, maximum value is ESP_NOW_MAX_TOTAL_PEER_NUM

int **encrypt_num**

Number of encrypted ESPNOW peers, maximum value is ESP_NOW_MAX_ENCRYPT_PEER_NUM

Macros

ESP_ERR_ESPNOW_BASE

ESPNOW error number base.

ESP_ERR_ESPNOW_NOT_INIT

ESPNOW is not initialized.

ESP_ERR_ESPNOW_ARG

Invalid argument

ESP_ERR_ESPNOW_NO_MEM

Out of memory

ESP_ERR_ESPNOW_FULL

ESPNOW peer list is full

ESP_ERR_ESPNOW_NOT_FOUND

ESPNOW peer is not found

ESP_ERR_ESPNOW_INTERNAL

Internal error

ESP_ERR_ESPNOW_EXIST

ESPNOW peer has existed

ESP_ERR_ESPNOW_IF

Interface error

ESP_NOW_ETH_ALEN

Length of ESPNOW peer MAC address

ESP_NOW_KEY_LEN

Length of ESPNOW peer local master key

ESP_NOW_MAX_TOTAL_PEER_NUM

Maximum number of ESPNOW total peers

ESP_NOW_MAX_ENCRYPT_PEER_NUM

Maximum number of ESPNOW encrypted peers

ESP_NOW_MAX_DATA_LEN

Maximum length of ESPNOW data which is sent very time

Type Definitions

typedef struct *esp_now_peer_info* **esp_now_peer_info_t**

ESPNOW peer information parameters.

typedef struct *esp_now_peer_num* **esp_now_peer_num_t**

Number of ESPNOW peers which exist currently.

typedef void (***esp_now_recv_cb_t**)(const uint8_t *mac_addr, const uint8_t *data, int data_len)

Callback function of receiving ESPNOW data.

Param mac_addr peer MAC address
Param data received data
Param data_len length of received data

typedef void (***esp_now_send_cb_t**)(const uint8_t *mac_addr, *esp_now_send_status_t* status)

Callback function of sending ESPNOW data.

Param mac_addr peer MAC address
Param status status of sending ESPNOW data (succeed or fail)

Enumerations

enum **esp_now_send_status_t**

Status of sending ESPNOW data .

Values:

enumerator **ESP_NOW_SEND_SUCCESS**

Send ESPNOW data successfully

enumerator **ESP_NOW_SEND_FAIL**

Send ESPNOW data fail

ESP-WIFI-MESH Programming Guide

This is a programming guide for ESP-WIFI-MESH, including the API reference and coding examples. This guide is split into the following parts:

1. *ESP-WIFI-MESH Programming Model*
2. *Writing an ESP-WIFI-MESH Application*
3. *Self Organized Networking*
4. *Application Examples*
5. *API Reference*

For documentation regarding the ESP-WIFI-MESH protocol, please see the *ESP-WIFI-MESH API Guide*. For more information about ESP-WIFI-MESH Development Framework, please see ESP-WIFI-MESH Development Framework.

ESP-WIFI-MESH Programming Model

Software Stack The ESP-WIFI-MESH software stack is built atop the Wi-Fi Driver/FreeRTOS and may use the LwIP Stack in some instances (i.e. the root node). The following diagram illustrates the ESP-WIFI-MESH software stack.

System Events An application interfaces with ESP-WIFI-MESH via **ESP-WIFI-MESH Events**. Since ESP-WIFI-MESH is built atop the Wi-Fi stack, it is also possible for the application to interface with the Wi-Fi driver via the **Wi-Fi Event Task**. The following diagram illustrates the interfaces for the various System Events in an ESP-WIFI-MESH application.

The `mesh_event_id_t` defines all possible ESP-WIFI-MESH events and can indicate events such as the connection/disconnection of parent/child. Before ESP-WIFI-MESH events can be used, the application must register a **Mesh Events handler** via `esp_event_handler_register()` to the default event task. The Mesh Events handler that is registered contain handlers for each ESP-WIFI-MESH event relevant to the application.

Typical use cases of mesh events include using events such as `MESH_EVENT_PARENT_CONNECTED` and `MESH_EVENT_CHILD_CONNECTED` to indicate when a node can begin transmitting data upstream and downstream respectively. Likewise, `IP_EVENT_STA_GOT_IP` and `IP_EVENT_STA_LOST_IP` can be used to indicate when the root node can and cannot transmit data to the external IP network.

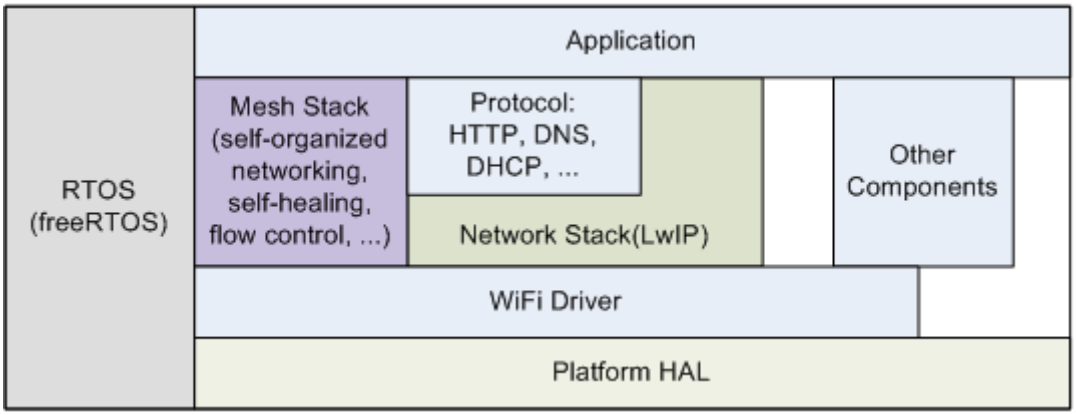

Fig. 2: ESP-WIFI-MESH Software Stack

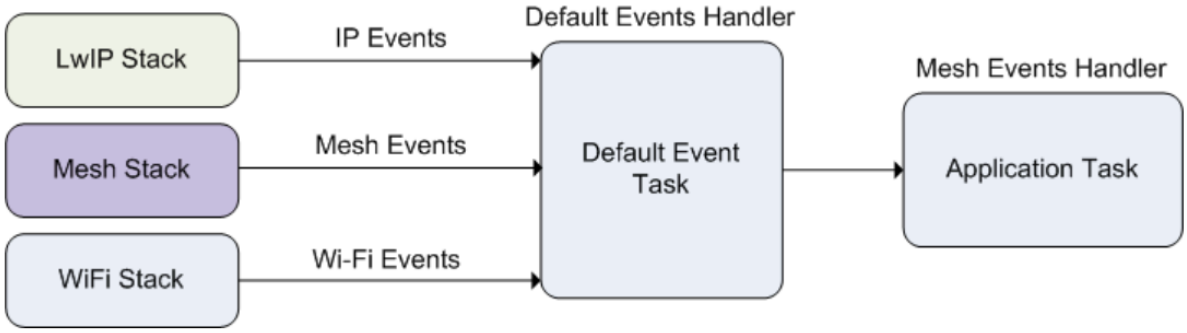

Fig. 3: ESP-WIFI-MESH System Events Delivery

Warning: When using ESP-WIFI-MESH under self-organized mode, users must ensure that no calls to Wi-Fi API are made. This is due to the fact that the self-organizing mode will internally make Wi-Fi API calls to connect/disconnect/scan etc. **Any Wi-Fi calls from the application (including calls from callbacks and handlers of Wi-Fi events) may interfere with ESP-WIFI-MESH's self-organizing behavior**. Therefore, user's should not call Wi-Fi APIs after *esp_mesh_start()* is called, and before *esp_mesh_stop()* is called.

LwIP & ESP-WIFI-MESH The application can access the ESP-WIFI-MESH stack directly without having to go through the LwIP stack. The LwIP stack is only required by the root node to transmit/receive data to/from an external IP network. However, since every node can potentially become the root node (due to automatic root node selection), each node must still initialize the LwIP stack.

Each node is required to initialize LwIP by calling `tcpip_adapter_init()`. In order to prevent non-root node access to LwIP, the application should stop the following services after LwIP initialization:

- DHCP server service on the softAP interface.
- DHCP client service on the station interface.

The following code snippet demonstrates how to initialize LwIP for ESP-WIFI-MESH applications.

```
/*  tcpip initialization */
tcpip_adapter_init();
/*
 * for mesh
 * stop DHCP server on softAP interface by default
 * stop DHCP client on station interface by default
 */
```

(continues on next page)

(continued from previous page)

```
ESP_ERROR_CHECK(tcpip_adapter_dhcps_stop(TCPIP_ADAPTER_IF_AP));
ESP_ERROR_CHECK(tcpip_adapter_dhcpc_stop(TCPIP_ADAPTER_IF_STA));
```

Note: ESP-WIFI-MESH requires a root node to be connected with a router. Therefore, in the event that a node becomes the root, **the corresponding handler must start the DHCP client service and immediately obtain an IP address**. Doing so will allow other nodes to begin transmitting/receiving packets to/from the external IP network. However, this step is unnecessary if static IP settings are used.

Writing an ESP-WIFI-MESH Application The prerequisites for starting ESP-WIFI-MESH is to initialize LwIP and Wi-Fi, The following code snippet demonstrates the necessary prerequisite steps before ESP-WIFI-MESH itself can be initialized.

```
tcpip_adapter_init();
/*
 * for mesh
 * stop DHCP server on softAP interface by default
 * stop DHCP client on station interface by default
 */
ESP_ERROR_CHECK(tcpip_adapter_dhcps_stop(TCPIP_ADAPTER_IF_AP));
ESP_ERROR_CHECK(tcpip_adapter_dhcpc_stop(TCPIP_ADAPTER_IF_STA));

/*  event initialization */
ESP_ERROR_CHECK(esp_event_loop_create_default());

/*  Wi-Fi initialization */
wifi_init_config_t config = WIFI_INIT_CONFIG_DEFAULT();
ESP_ERROR_CHECK(esp_wifi_init(&config));
/*  register IP events handler */
ESP_ERROR_CHECK(esp_event_handler_register(IP_EVENT, IP_EVENT_STA_GOT_IP, &ip_
↪event_handler, NULL));
ESP_ERROR_CHECK(esp_wifi_set_storage(WIFI_STORAGE_FLASH));
ESP_ERROR_CHECK(esp_wifi_start());
```

After initializing LwIP and Wi-Fi, the process of getting an ESP-WIFI-MESH network up and running can be summarized into the following three steps:

1. *Initialize Mesh*
2. *Configuring an ESP-WIFI-MESH Network*
3. *Start Mesh*

Initialize Mesh The following code snippet demonstrates how to initialize ESP-WIFI-MESH

```
/*  mesh initialization */
ESP_ERROR_CHECK(esp_mesh_init());
/*  register mesh events handler */
ESP_ERROR_CHECK(esp_event_handler_register(MESH_EVENT, ESP_EVENT_ANY_ID, &mesh_
↪event_handler, NULL));
```

Configuring an ESP-WIFI-MESH Network ESP-WIFI-MESH is configured via *esp_mesh_set_config()* which receives its arguments using the *mesh_cfg_t* structure. The structure contains the following parameters used to configure ESP-WIFI-MESH:

Parameter	Description
Channel	Range from 1 to 14
Mesh ID	ID of ESP-WIFI-MESH Network, see *mesh_addr_t*
Router	Router Configuration, see *mesh_router_t*
Mesh AP	Mesh AP Configuration, see *mesh_ap_cfg_t*
Crypto Functions	Crypto Functions for Mesh IE, see mesh_crypto_funcs_t

The following code snippet demonstrates how to configure ESP-WIFI-MESH.

```
/* Enable the Mesh IE encryption by default */
mesh_cfg_t cfg = MESH_INIT_CONFIG_DEFAULT();
/* mesh ID */
memcpy((uint8_t *) &cfg.mesh_id, MESH_ID, 6);
/* channel (must match the router's channel) */
cfg.channel = CONFIG_MESH_CHANNEL;
/* router */
cfg.router.ssid_len = strlen(CONFIG_MESH_ROUTER_SSID);
memcpy((uint8_t *) &cfg.router.ssid, CONFIG_MESH_ROUTER_SSID, cfg.router.ssid_len);
memcpy((uint8_t *) &cfg.router.password, CONFIG_MESH_ROUTER_PASSWD,
       strlen(CONFIG_MESH_ROUTER_PASSWD));
/* mesh softAP */
cfg.mesh_ap.max_connection = CONFIG_MESH_AP_CONNECTIONS;
memcpy((uint8_t *) &cfg.mesh_ap.password, CONFIG_MESH_AP_PASSWD,
       strlen(CONFIG_MESH_AP_PASSWD));
ESP_ERROR_CHECK(esp_mesh_set_config(&cfg));
```

Start Mesh The following code snippet demonstrates how to start ESP-WIFI-MESH.

```
/* mesh start */
ESP_ERROR_CHECK(esp_mesh_start());
```

After starting ESP-WIFI-MESH, the application should check for ESP-WIFI-MESH events to determine when it has connected to the network. After connecting, the application can start transmitting and receiving packets over the ESP-WIFI-MESH network using *esp_mesh_send()* and *esp_mesh_recv()*.

Self Organized Networking Self organized networking is a feature of ESP-WIFI-MESH where nodes can autonomously scan/select/connect/reconnect to other nodes and routers. This feature allows an ESP-WIFI-MESH network to operate with high degree of autonomy by making the network robust to dynamic network topologies and conditions. With self organized networking enabled, nodes in an ESP-WIFI-MESH network are able to carry out the following actions without autonomously:

- Selection or election of the root node (see **Automatic Root Node Selection** in *Building a Network*)
- Selection of a preferred parent node (see **Parent Node Selection** in *Building a Network*)
- Automatic reconnection upon detecting a disconnection (see **Intermediate Parent Node Failure** in *Managing a Network*)

When self organized networking is enabled, the ESP-WIFI-MESH stack will internally make calls to Wi-Fi APIs. Therefore, **the application layer should not make any calls to Wi-Fi APIs whilst self organized networking is enabled as doing so would risk interfering with ESP-WIFI-MESH**.

Toggling Self Organized Networking Self organized networking can be enabled or disabled by the application at runtime by calling the *esp_mesh_set_self_organized()* function. The function has the two following parameters:

- `bool enable` specifies whether to enable or disable self organized networking.
- `bool select_parent` specifies whether a new parent node should be selected when enabling self organized networking. Selecting a new parent has different effects depending the node type and the node's current state. This parameter is unused when disabling self organized networking.

Disabling Self Organized Networking The following code snippet demonstrates how to disable self organized networking.

```
//Disable self organized networking
esp_mesh_set_self_organized(false, false);
```

ESP-WIFI-MESH will attempt to maintain the node's current Wi-Fi state when disabling self organized networking.

- If the node was previously connected to other nodes, it will remain connected.
- If the node was previously disconnected and was scanning for a parent node or router, it will stop scanning.
- If the node was previously attempting to reconnect to a parent node or router, it will stop reconnecting.

Enabling Self Organized Networking ESP-WIFI-MESH will attempt to maintain the node's current Wi-Fi state when enabling self organized networking. However, depending on the node type and whether a new parent is selected, the Wi-Fi state of the node can change. The following table shows effects of enabling self organized networking.

Select Parent	Is Root Node	Effects
N	N	• Nodes already connected to a parent node will remain connected. • Nodes previously scanning for a parent nodes will stop scanning. Call *esp_mesh_connect()* to restart.
	Y	• A root node already connected to router will stay connected. • A root node disconnected from router will need to call *esp_mesh_connect()* to reconnect.
Y	N	• Nodes without a parent node will automatically select a preferred parent and connect. • Nodes already connected to a parent node will disconnect, reselect a preferred parent node, and connect.
	Y	• For a root node to connect to a parent node, it must give up it's role as root. Therefore, a root node will disconnect from the router and all child nodes, select a preferred parent node, and connect.

The following code snipping demonstrates how to enable self organized networking.

```
//Enable self organized networking and select a new parent
esp_mesh_set_self_organized(true, true);
```

(continues on next page)

(continued from previous page)

```
...

//Enable self organized networking and manually reconnect
esp_mesh_set_self_organized(true, false);
esp_mesh_connect();
```

Calling Wi-Fi API There can be instances in which an application may want to directly call Wi-Fi API whilst using ESP-WIFI-MESH. For example, an application may want to manually scan for neighboring APs. However, **self organized networking must be disabled before the application calls any Wi-Fi APIs**. This will prevent the ESP-WIFI-MESH stack from attempting to call any Wi-Fi APIs and potentially interfering with the application's calls.

Therefore, application calls to Wi-Fi APIs should be placed in between calls of *esp_mesh_set_self_organized()* which disable and enable self organized networking. The following code snippet demonstrates how an application can safely call *esp_wifi_scan_start()* whilst using ESP-WIFI-MESH.

```
//Disable self organized networking
esp_mesh_set_self_organized(0, 0);

//Stop any scans already in progress
esp_wifi_scan_stop();
//Manually start scan. Will automatically stop when run to completion
esp_wifi_scan_start();

//Process scan results

...

//Re-enable self organized networking if still connected
esp_mesh_set_self_organized(1, 0);

...

//Re-enable self organized networking if non-root and disconnected
esp_mesh_set_self_organized(1, 1);

...

//Re-enable self organized networking if root and disconnected
esp_mesh_set_self_organized(1, 0);  //Don't select new parent
esp_mesh_connect();                 //Manually reconnect to router
```

Application Examples ESP-IDF contains these ESP-WIFI-MESH example projects:

The Internal Communication Example demonstrates how to set up a ESP-WIFI-MESH network and have the root node send a data packet to every node within the network.

The Manual Networking Example demonstrates how to use ESP-WIFI-MESH without the self-organizing features. This example shows how to program a node to manually scan for a list of potential parent nodes and select a parent node based on custom criteria.

API Reference

Header File

- components/esp_wifi/include/esp_mesh.h

Functions

esp_err_t **esp_mesh_init**(void)

Mesh initialization.

- Check whether Wi-Fi is started.
- Initialize mesh global variables with default values.

Attention This API shall be called after Wi-Fi is started.

Returns
- ESP_OK
- ESP_FAIL

esp_err_t **esp_mesh_deinit**(void)

Mesh de-initialization.

- Release resources and stop the mesh

Returns
- ESP_OK
- ESP_FAIL

esp_err_t **esp_mesh_start**(void)

Start mesh.

- Initialize mesh IE.
- Start mesh network management service.
- Create TX and RX queues according to the configuration.
- Register mesh packets receive callback.

Attention This API shall be called after mesh initialization and configuration.

Returns
- ESP_OK
- ESP_FAIL
- ESP_ERR_MESH_NOT_INIT
- ESP_ERR_MESH_NOT_CONFIG
- ESP_ERR_MESH_NO_MEMORY

esp_err_t **esp_mesh_stop**(void)

Stop mesh.

- Deinitialize mesh IE.
- Disconnect with current parent.
- Disassociate all currently associated children.
- Stop mesh network management service.
- Unregister mesh packets receive callback.
- Delete TX and RX queues.
- Release resources.
- Restore Wi-Fi softAP to default settings if Wi-Fi dual mode is enabled.
- Set Wi-Fi Power Save type to WIFI_PS_NONE.

Returns

- ESP_OK
- ESP_FAIL

esp_err_t **esp_mesh_send**(const *mesh_addr_t* *to, const *mesh_data_t* *data, int flag, const *mesh_opt_t* opt[], int opt_count)

Send a packet over the mesh network.

- Send a packet to any device in the mesh network.
- Send a packet to external IP network.

Attention This API is not reentrant.

Parameters

- **to** –**[in]** the address of the final destination of the packet
  - If the packet is to the root, set this parameter to NULL.
  - If the packet is to an external IP network, set this parameter to the IPv4:PORT combination. This packet will be delivered to the root firstly, then the root will forward this packet to the final IP server address.
- **data** –**[in]** pointer to a sending mesh packet
  - Field size should not exceed MESH_MPS. Note that the size of one mesh packet should not exceed MESH_MTU.
  - Field proto should be set to data protocol in use (default is MESH_PROTO_BIN for binary).
  - Field tos should be set to transmission tos (type of service) in use (default is MESH_TOS_P2P for point-to-point reliable).
- **flag** –**[in]** bitmap for data sent
  - Speed up the route search
    * If the packet is to the root and "to" parameter is NULL, set this parameter to 0.
    * If the packet is to an internal device, MESH_DATA_P2P should be set.
    * If the packet is to the root ("to" parameter isn't NULL) or to external IP network, MESH_DATA_TODS should be set.
    * If the packet is from the root to an internal device, MESH_DATA_FROMDS should be set.
  - Specify whether this API is block or non-block, block by default
    * If needs non-blocking, MESH_DATA_NONBLOCK should be set. Otherwise, may use esp_mesh_send_block_time() to specify a blocking time.
  - In the situation of the root change, MESH_DATA_DROP identifies this packet can be dropped by the new root for upstream data to external IP network, we try our best to avoid data loss caused by the root change, but there is a risk that the new root is running out of memory because most of memory is occupied by the pending data which isn't read out in time by esp_mesh_recv_toDS().
    Generally, we suggest esp_mesh_recv_toDS() is called after a connection with IP network is created. Thus data outgoing to external IP network via socket is just from reading esp_mesh_recv_toDS() which avoids unnecessary memory copy.
- **opt** –**[in]** options
  - In case of sending a packet to a certain group, MESH_OPT_SEND_GROUP is a good choice. In this option, the value field should be set to the target receiver addresses in this group.
  - Root sends a packet to an internal device, this packet is from external IP network in case the receiver device responds this packet, MESH_OPT_RECV_DS_ADDR is required to attach the target DS address.
- **opt_count** –**[in]** option count
  - Currently, this API only takes one option, so opt_count is only supported to be 1.

Returns

- ESP_OK

- ESP_FAIL
- ESP_ERR_MESH_ARGUMENT
- ESP_ERR_MESH_NOT_START
- ESP_ERR_MESH_DISCONNECTED
- ESP_ERR_MESH_OPT_UNKNOWN
- ESP_ERR_MESH_EXCEED_MTU
- ESP_ERR_MESH_NO_MEMORY
- ESP_ERR_MESH_TIMEOUT
- ESP_ERR_MESH_QUEUE_FULL
- ESP_ERR_MESH_NO_ROUTE_FOUND
- ESP_ERR_MESH_DISCARD

esp_err_t **esp_mesh_send_block_time**(uint32_t time_ms)

Set blocking time of esp_mesh_send()

Attention This API shall be called before mesh is started.

Parameters **time_ms** –**[in]** blocking time of esp_mesh_send(), unit:ms

Returns

- ESP_OK

esp_err_t **esp_mesh_recv**(*mesh_addr_t* *from, *mesh_data_t* *data, int timeout_ms, int *flag, *mesh_opt_t* opt[], int opt_count)

Receive a packet targeted to self over the mesh network.

flag could be MESH_DATA_FROMDS or MESH_DATA_TODS.

Attention Mesh RX queue should be checked regularly to avoid running out of memory.

- Use esp_mesh_get_rx_pending() to check the number of packets available in the queue waiting to be received by applications.

Parameters

- **from** –**[out]** the address of the original source of the packet
- **data** –**[out]** pointer to the received mesh packet
  - Field proto is the data protocol in use. Should follow it to parse the received data.
  - Field tos is the transmission tos (type of service) in use.
- **timeout_ms** –**[in]** wait time if a packet isn't immediately available (0:no wait, port-MAX_DELAY:wait forever)
- **flag** –**[out]** bitmap for data received
  - MESH_DATA_FROMDS represents data from external IP network
  - MESH_DATA_TODS represents data directed upward within the mesh network
- **opt** –**[out]** options desired to receive
  - MESH_OPT_RECV_DS_ADDR attaches the DS address
- **opt_count** –**[in]** option count desired to receive
  - Currently, this API only takes one option, so opt_count is only supported to be 1.

Returns

- ESP_OK
- ESP_ERR_MESH_ARGUMENT
- ESP_ERR_MESH_NOT_START
- ESP_ERR_MESH_TIMEOUT
- ESP_ERR_MESH_DISCARD

esp_err_t **esp_mesh_recv_toDS**(*mesh_addr_t* *from, *mesh_addr_t* *to, *mesh_data_t* *data, int timeout_ms, int *flag, *mesh_opt_t* opt[], int opt_count)

Receive a packet targeted to external IP network.

- Root uses this API to receive packets destined to external IP network
- Root forwards the received packets to the final destination via socket.
- If no socket connection is ready to send out the received packets and this esp_mesh_recv_toDS() hasn't been called by applications, packets from the whole mesh network will be pending in toDS queue.

Use esp_mesh_get_rx_pending() to check the number of packets available in the queue waiting to be received by applications in case of running out of memory in the root.

Using esp_mesh_set_xon_qsize() users may configure the RX queue size, default:32. If this size is too large, and esp_mesh_recv_toDS() isn't called in time, there is a risk that a great deal of memory is occupied by the pending packets. If this size is too small, it will impact the efficiency on upstream. How to decide this value depends on the specific application scenarios.

flag could be MESH_DATA_TODS.

Attention This API is only called by the root.

Parameters

- **`from`** –**[out]** the address of the original source of the packet
- **`to`** –**[out]** the address contains remote IP address and port (IPv4:PORT)
- **`data`** –**[out]** pointer to the received packet
  - Contain the protocol and applications should follow it to parse the data.
- **`timeout_ms`** –**[in]** wait time if a packet isn't immediately available (0:no wait, port-MAX_DELAY:wait forever)
- **`flag`** –**[out]** bitmap for data received
  - MESH_DATA_TODS represents the received data target to external IP network. Root shall forward this data to external IP network via the association with router.
- **`opt`** –**[out]** options desired to receive
- **`opt_count`** –**[in]** option count desired to receive

Returns

- ESP_OK
- ESP_ERR_MESH_ARGUMENT
- ESP_ERR_MESH_NOT_START
- ESP_ERR_MESH_TIMEOUT
- ESP_ERR_MESH_DISCARD
- ESP_ERR_MESH_RECV_RELEASE

esp_err_t **`esp_mesh_set_config`**(const *mesh_cfg_t* *config)

Set mesh stack configuration.

- Use MESH_INIT_CONFIG_DEFAULT() to initialize the default values, mesh IE is encrypted by default.
- Mesh network is established on a fixed channel (1-14).
- Mesh event callback is mandatory.
- Mesh ID is an identifier of an MBSS. Nodes with the same mesh ID can communicate with each other.
- Regarding to the router configuration, if the router is hidden, BSSID field is mandatory.

If BSSID field isn't set and there exists more than one router with same SSID, there is a risk that more roots than one connected with different BSSID will appear. It means more than one mesh network is established with the same mesh ID.

Root conflict function could eliminate redundant roots connected with the same BSSID, but couldn't handle roots connected with different BSSID. Because users might have such requirements of setting up routers with same SSID for the future replacement. But in that case, if the above situations happen, please make sure applications implement forward functions on the root to guarantee devices in different mesh networks can communicate with each other. max_connection of mesh softAP is limited by the max number of Wi-Fi softAP supported (max:10).

Attention This API shall be called before mesh is started after mesh is initialized.

Parameters **config** –**[in]** pointer to mesh stack configuration
Returns
- ESP_OK
- ESP_ERR_MESH_ARGUMENT
- ESP_ERR_MESH_NOT_ALLOWED

esp_err_t **esp_mesh_get_config**(*mesh_cfg_t* *config)

Get mesh stack configuration.

Parameters **config** –**[out]** pointer to mesh stack configuration
Returns
- ESP_OK
- ESP_ERR_MESH_ARGUMENT

esp_err_t **esp_mesh_set_router**(const *mesh_router_t* *router)

Get router configuration.

Attention This API is used to dynamically modify the router configuration after mesh is configured.

Parameters **router** –**[in]** pointer to router configuration
Returns
- ESP_OK
- ESP_ERR_MESH_ARGUMENT

esp_err_t **esp_mesh_get_router**(*mesh_router_t* *router)

Get router configuration.

Parameters **router** –**[out]** pointer to router configuration
Returns
- ESP_OK
- ESP_ERR_MESH_ARGUMENT

esp_err_t **esp_mesh_set_id**(const *mesh_addr_t* *id)

Set mesh network ID.

Attention This API is used to dynamically modify the mesh network ID.

Parameters **id** –**[in]** pointer to mesh network ID
Returns
- ESP_OK
- ESP_ERR_MESH_ARGUMENT: invalid argument

esp_err_t **esp_mesh_get_id**(*mesh_addr_t* *id)

Get mesh network ID.

Parameters **id** –**[out]** pointer to mesh network ID
Returns
- ESP_OK
- ESP_ERR_MESH_ARGUMENT

esp_err_t **esp_mesh_set_type**(*mesh_type_t* type)

Designate device type over the mesh network.

- MESH_IDLE: designates a device as a self-organized node for a mesh network
- MESH_ROOT: designates the root node for a mesh network
- MESH_LEAF: designates a device as a standalone Wi-Fi station that connects to a parent
- MESH_STA: designates a device as a standalone Wi-Fi station that connects to a router

Parameters **type** –**[in]** device type
Returns
- ESP_OK
- ESP_ERR_MESH_NOT_ALLOWED

mesh_type_t **esp_mesh_get_type**(void)

Get device type over mesh network.

Attention This API shall be called after having received the event MESH_EVENT_PARENT_CONNECTED.

Returns mesh type

esp_err_t **esp_mesh_set_max_layer**(int max_layer)

Set network max layer value.

- for tree topology, the max is 25.
- for chain topology, the max is 1000.
- Network max layer limits the max hop count.

Attention This API shall be called before mesh is started.

Parameters **max_layer** –**[in]** max layer value
Returns
- ESP_OK
- ESP_ERR_MESH_ARGUMENT
- ESP_ERR_MESH_NOT_ALLOWED

int **esp_mesh_get_max_layer**(void)

Get max layer value.

Returns max layer value

esp_err_t **esp_mesh_set_ap_password**(const uint8_t *pwd, int len)

Set mesh softAP password.

Attention This API shall be called before mesh is started.

Parameters
- **pwd** –**[in]** pointer to the password
- **len** –**[in]** password length

Returns
- ESP_OK
- ESP_ERR_MESH_ARGUMENT
- ESP_ERR_MESH_NOT_ALLOWED

esp_err_t **esp_mesh_set_ap_authmode**(*wifi_auth_mode_t* authmode)

Set mesh softAP authentication mode.

Attention This API shall be called before mesh is started.

Parameters **authmode** –**[in]** authentication mode
Returns
- ESP_OK
- ESP_ERR_MESH_ARGUMENT
- ESP_ERR_MESH_NOT_ALLOWED

wifi_auth_mode_t **esp_mesh_get_ap_authmode**(void)

Get mesh softAP authentication mode.

Returns authentication mode

esp_err_t **esp_mesh_set_ap_connections**(int connections)

Set mesh max connection value.

- Set mesh softAP max connection = mesh max connection + non-mesh max connection

Attention This API shall be called before mesh is started.

Parameters **connections** –**[in]** the number of max connections
Returns
- ESP_OK
- ESP_ERR_MESH_ARGUMENT

int **esp_mesh_get_ap_connections**(void)

Get mesh max connection configuration.

Returns the number of mesh max connections

int **esp_mesh_get_non_mesh_connections**(void)

Get non-mesh max connection configuration.

Returns the number of non-mesh max connections

int **esp_mesh_get_layer**(void)

Get current layer value over the mesh network.

Attention This API shall be called after having received the event MESH_EVENT_PARENT_CONNECTED.

Returns layer value

esp_err_t **esp_mesh_get_parent_bssid**(*mesh_addr_t* *bssid)

Get the parent BSSID.

Attention This API shall be called after having received the event MESH_EVENT_PARENT_CONNECTED.

Parameters **bssid** –**[out]** pointer to parent BSSID
Returns

- ESP_OK
- ESP_FAIL

bool **esp_mesh_is_root**(void)

Return whether the device is the root node of the network.

Returns true/false

esp_err_t **esp_mesh_set_self_organized**(bool enable, bool select_parent)

Enable/disable self-organized networking.

- Self-organized networking has three main functions: select the root node; find a preferred parent; initiate reconnection if a disconnection is detected.
- Self-organized networking is enabled by default.
- If self-organized is disabled, users should set a parent for the device via esp_mesh_set_parent().

Attention This API is used to dynamically modify whether to enable the self organizing.

Parameters

- **enable** –**[in]** enable or disable self-organized networking
- **select_parent** –**[in]** Only valid when self-organized networking is enabled.
  - if select_parent is set to true, the root will give up its mesh root status and search for a new parent like other non-root devices.

Returns

- ESP_OK
- ESP_FAIL

bool **esp_mesh_get_self_organized**(void)

Return whether enable self-organized networking or not.

Returns true/false

esp_err_t **esp_mesh_waive_root**(const *mesh_vote_t* *vote, int reason)

Cause the root device to give up (waive) its mesh root status.

- A device is elected root primarily based on RSSI from the external router.
- If external router conditions change, users can call this API to perform a root switch.
- In this API, users could specify a desired root address to replace itself or specify an attempts value to ask current root to initiate a new round of voting. During the voting, a better root candidate would be expected to find to replace the current one.
- If no desired root candidate, the vote will try a specified number of attempts (at least 15). If no better root candidate is found, keep the current one. If a better candidate is found, the new better one will send a root switch request to the current root, current root will respond with a root switch acknowledgment.
- After that, the new candidate will connect to the router to be a new root, the previous root will disconnect with the router and choose another parent instead.

Root switch is completed with minimal disruption to the whole mesh network.

Attention This API is only called by the root.

Parameters

- **vote** –**[in]** vote configuration
  - If this parameter is set NULL, the vote will perform the default 15 times.
  - Field percentage threshold is 0.9 by default.
  - Field is_rc_specified shall be false.
  - Field attempts shall be at least 15 times.

- **reason** –**[in]** only accept MESH_VOTE_REASON_ROOT_INITIATED for now

Returns

- ESP_OK
- ESP_ERR_MESH_QUEUE_FULL
- ESP_ERR_MESH_DISCARD
- ESP_FAIL

esp_err_t **esp_mesh_set_vote_percentage**(float percentage)

Set vote percentage threshold for approval of being a root (default:0.9)

- During the networking, only obtaining vote percentage reaches this threshold, the device could be a root.

Attention This API shall be called before mesh is started.

Parameters **percentage** –**[in]** vote percentage threshold

Returns

- ESP_OK
- ESP_FAIL

float **esp_mesh_get_vote_percentage**(void)

Get vote percentage threshold for approval of being a root.

Returns percentage threshold

esp_err_t **esp_mesh_set_ap_assoc_expire**(int seconds)

Set mesh softAP associate expired time (default:10 seconds)

- If mesh softAP hasn't received any data from an associated child within this time, mesh softAP will take this child inactive and disassociate it.
- If mesh softAP is encrypted, this value should be set a greater value, such as 30 seconds.

Parameters **seconds** –**[in]** the expired time

Returns

- ESP_OK
- ESP_FAIL

int **esp_mesh_get_ap_assoc_expire**(void)

Get mesh softAP associate expired time.

Returns seconds

int **esp_mesh_get_total_node_num**(void)

Get total number of devices in current network (including the root)

Attention The returned value might be incorrect when the network is changing.

Returns total number of devices (including the root)

int **esp_mesh_get_routing_table_size**(void)

Get the number of devices in this device's sub-network (including self)

Returns the number of devices over this device's sub-network (including self)

esp_err_t **esp_mesh_get_routing_table**(*mesh_addr_t* *mac, int len, int *size)

Get routing table of this device' s sub-network (including itself)

Parameters
- **mac** –**[out]** pointer to routing table
- **len** –**[in]** routing table size(in bytes)
- **size** –**[out]** pointer to the number of devices in routing table (including itself)

Returns
- ESP_OK
- ESP_ERR_MESH_ARGUMENT

esp_err_t **esp_mesh_post_toDS_state**(bool reachable)

Post the toDS state to the mesh stack.

Attention This API is only for the root.

Parameters **reachable** –**[in]** this state represents whether the root is able to access external IP network

Returns
- ESP_OK
- ESP_FAIL

esp_err_t **esp_mesh_get_tx_pending**(*mesh_tx_pending_t* *pending)

Return the number of packets pending in the queue waiting to be sent by the mesh stack.

Parameters **pending** –**[out]** pointer to the TX pending

Returns
- ESP_OK
- ESP_FAIL

esp_err_t **esp_mesh_get_rx_pending**(*mesh_rx_pending_t* *pending)

Return the number of packets available in the queue waiting to be received by applications.

Parameters **pending** –**[out]** pointer to the RX pending

Returns
- ESP_OK
- ESP_FAIL

int **esp_mesh_available_txupQ_num**(const *mesh_addr_t* *addr, uint32_t *xseqno_in)

Return the number of packets could be accepted from the specified address.

Parameters
- **addr** –**[in]** self address or an associate children address
- **xseqno_in** –**[out]** sequence number of the last received packet from the specified address

Returns the number of upQ for a certain address

esp_err_t **esp_mesh_set_xon_qsize**(int qsize)

Set the number of queue.

Attention This API shall be called before mesh is started.

Parameters **qsize** –**[in]** default:32 (min:16)

Returns
- ESP_OK
- ESP_FAIL

int **esp_mesh_get_xon_qsize**(void)

Get queue size.

Returns the number of queue

esp_err_t **esp_mesh_allow_root_conflicts**(bool allowed)

Set whether allow more than one root existing in one network.

Parameters **allowed** –**[in]** allow or not

Returns

- ESP_OK
- ESP_WIFI_ERR_NOT_INIT
- ESP_WIFI_ERR_NOT_START

bool **esp_mesh_is_root_conflicts_allowed**(void)

Check whether allow more than one root to exist in one network.

Returns true/false

esp_err_t **esp_mesh_set_group_id**(const *mesh_addr_t* *addr, int num)

Set group ID addresses.

Parameters

- **addr** –**[in]** pointer to new group ID addresses
- **num** –**[in]** the number of group ID addresses

Returns

- ESP_OK
- ESP_MESH_ERR_ARGUMENT

esp_err_t **esp_mesh_delete_group_id**(const *mesh_addr_t* *addr, int num)

Delete group ID addresses.

Parameters

- **addr** –**[in]** pointer to deleted group ID address
- **num** –**[in]** the number of group ID addresses

Returns

- ESP_OK
- ESP_MESH_ERR_ARGUMENT

int **esp_mesh_get_group_num**(void)

Get the number of group ID addresses.

Returns the number of group ID addresses

esp_err_t **esp_mesh_get_group_list**(*mesh_addr_t* *addr, int num)

Get group ID addresses.

Parameters

- **addr** –**[out]** pointer to group ID addresses
- **num** –**[in]** the number of group ID addresses

Returns

- ESP_OK
- ESP_MESH_ERR_ARGUMENT

bool **esp_mesh_is_my_group**(const *mesh_addr_t* *addr)

Check whether the specified group address is my group.

Returns true/false

esp_err_t **esp_mesh_set_capacity_num**(int num)

Set mesh network capacity (max:1000, default:300)

Attention This API shall be called before mesh is started.

Parameters **num** –**[in]** mesh network capacity
Returns
- ESP_OK
- ESP_ERR_MESH_NOT_ALLOWED
- ESP_MESH_ERR_ARGUMENT

int **esp_mesh_get_capacity_num**(void)

Get mesh network capacity.

Returns mesh network capacity

esp_err_t **esp_mesh_set_ie_crypto_funcs**(const mesh_crypto_funcs_t *crypto_funcs)

Set mesh IE crypto functions.

Attention This API can be called at any time after mesh is initialized.

Parameters **crypto_funcs** –**[in]** crypto functions for mesh IE
- If crypto_funcs is set to NULL, mesh IE is no longer encrypted.

Returns
- ESP_OK

esp_err_t **esp_mesh_set_ie_crypto_key**(const char *key, int len)

Set mesh IE crypto key.

Attention This API can be called at any time after mesh is initialized.

Parameters
- **key** –**[in]** ASCII crypto key
- **len** –**[in]** length in bytes, range:8~64

Returns
- ESP_OK
- ESP_MESH_ERR_ARGUMENT

esp_err_t **esp_mesh_get_ie_crypto_key**(char *key, int len)

Get mesh IE crypto key.

Parameters
- **key** –**[out]** ASCII crypto key
- **len** –**[in]** length in bytes, range:8~64

Returns
- ESP_OK
- ESP_MESH_ERR_ARGUMENT

esp_err_t **esp_mesh_set_root_healing_delay**(int delay_ms)

Set delay time before starting root healing.

Parameters **delay_ms** –**[in]** delay time in milliseconds
Returns
- ESP_OK

int **esp_mesh_get_root_healing_delay**(void)

Get delay time before network starts root healing.

Returns delay time in milliseconds

esp_err_t **esp_mesh_fix_root**(bool enable)

Enable network Fixed Root Setting.

- Enabling fixed root disables automatic election of the root node via voting.
- All devices in the network shall use the same Fixed Root Setting (enabled or disabled).
- If Fixed Root is enabled, users should make sure a root node is designated for the network.

Parameters **enable** –**[in]** enable or not
Returns
- ESP_OK

bool **esp_mesh_is_root_fixed**(void)

Check whether network Fixed Root Setting is enabled.

- Enable/disable network Fixed Root Setting by API esp_mesh_fix_root().
- Network Fixed Root Setting also changes with the "flag" value in parent networking IE.

Returns true/false

esp_err_t **esp_mesh_set_parent**(const *wifi_config_t* *parent, const *mesh_addr_t* *parent_mesh_id, *mesh_type_t* my_type, int my_layer)

Set a specified parent for the device.

Attention This API can be called at any time after mesh is configured.

Parameters
- **parent** –**[in]** parent configuration, the SSID and the channel of the parent are mandatory.
  - If the BSSID is set, make sure that the SSID and BSSID represent the same parent, otherwise the device will never find this specified parent.
- **parent_mesh_id** –**[in]** parent mesh ID,
  - If this value is not set, the original mesh ID is used.
- **my_type** –**[in]** mesh type
  - MESH_STA is not supported.
  - If the parent set for the device is the same as the router in the network configuration, then my_type shall set MESH_ROOT and my_layer shall set MESH_ROOT_LAYER.
- **my_layer** –**[in]** mesh layer
  - my_layer of the device may change after joining the network.
  - If my_type is set MESH_NODE, my_layer shall be greater than MESH_ROOT_LAYER.
  - If my_type is set MESH_LEAF, the device becomes a standalone Wi-Fi station and no longer has the ability to extend the network.

Returns
- ESP_OK
- ESP_ERR_ARGUMENT
- ESP_ERR_MESH_NOT_CONFIG

esp_err_t **esp_mesh_scan_get_ap_ie_len**(int *len)

Get mesh networking IE length of one AP.

Parameters **len** –**[out]** mesh networking IE length
Returns
- ESP_OK
- ESP_ERR_WIFI_NOT_INIT
- ESP_ERR_WIFI_ARG
- ESP_ERR_WIFI_FAIL

esp_err_t **esp_mesh_scan_get_ap_record**(*wifi_ap_record_t* *ap_record, void *buffer)

Get AP record.

Attention Different from esp_wifi_scan_get_ap_records(), this API only gets one of APs scanned each time. See "manual_networking" example.

Parameters
- **ap_record** –**[out]** pointer to one AP record
- **buffer** –**[out]** pointer to the mesh networking IE of this AP

Returns
- ESP_OK
- ESP_ERR_WIFI_NOT_INIT
- ESP_ERR_WIFI_ARG
- ESP_ERR_WIFI_FAIL

esp_err_t **esp_mesh_flush_upstream_packets**(void)

Flush upstream packets pending in to_parent queue and to_parent_p2p queue.

Returns
- ESP_OK

esp_err_t **esp_mesh_get_subnet_nodes_num**(const *mesh_addr_t* *child_mac, int *nodes_num)

Get the number of nodes in the subnet of a specific child.

Parameters
- **child_mac** –**[in]** an associated child address of this device
- **nodes_num** –**[out]** pointer to the number of nodes in the subnet of a specific child

Returns
- ESP_OK
- ESP_ERR_MESH_NOT_START
- ESP_ERR_MESH_ARGUMENT

esp_err_t **esp_mesh_get_subnet_nodes_list**(const *mesh_addr_t* *child_mac, *mesh_addr_t* *nodes, int nodes_num)

Get nodes in the subnet of a specific child.

Parameters
- **child_mac** –**[in]** an associated child address of this device
- **nodes** –**[out]** pointer to nodes in the subnet of a specific child
- **nodes_num** –**[in]** the number of nodes in the subnet of a specific child

Returns
- ESP_OK
- ESP_ERR_MESH_NOT_START
- ESP_ERR_MESH_ARGUMENT

esp_err_t **esp_mesh_disconnect**(void)

Disconnect from current parent.

Returns
- ESP_OK

esp_err_t **esp_mesh_connect**(void)

Connect to current parent.

Returns
- ESP_OK

esp_err_t **esp_mesh_flush_scan_result**(void)

Flush scan result.

Returns
- ESP_OK

esp_err_t **esp_mesh_switch_channel**(const uint8_t *new_bssid, int csa_newchan, int csa_count)

Cause the root device to add Channel Switch Announcement Element (CSA IE) to beacon.

- Set the new channel
- Set how many beacons with CSA IE will be sent before changing a new channel
- Enable the channel switch function

Attention This API is only called by the root.

Parameters
- **new_bssid** –**[in]** the new router BSSID if the router changes
- **csa_newchan** –**[in]** the new channel number to which the whole network is moving
- **csa_count** –**[in]** channel switch period(beacon count), unit is based on beacon interval of its softAP, the default value is 15.

Returns
- ESP_OK

esp_err_t **esp_mesh_get_router_bssid**(uint8_t *router_bssid)

Get the router BSSID.

Parameters **router_bssid** –**[out]** pointer to the router BSSID

Returns
- ESP_OK
- ESP_ERR_WIFI_NOT_INIT
- ESP_ERR_WIFI_ARG

int64_t **esp_mesh_get_tsf_time**(void)

Get the TSF time.

Returns the TSF time

esp_err_t **esp_mesh_set_topology**(*esp_mesh_topology_t* topo)

Set mesh topology. The default value is MESH_TOPO_TREE.

- MESH_TOPO_CHAIN supports up to 1000 layers

Attention This API shall be called before mesh is started.

Parameters **topo** –**[in]** MESH_TOPO_TREE or MESH_TOPO_CHAIN

Returns
- ESP_OK
- ESP_MESH_ERR_ARGUMENT
- ESP_ERR_MESH_NOT_ALLOWED

esp_mesh_topology_t **esp_mesh_get_topology**(void)

Get mesh topology.

Returns MESH_TOPO_TREE or MESH_TOPO_CHAIN

esp_err_t **esp_mesh_enable_ps**(void)

Enable mesh Power Save function.

Attention This API shall be called before mesh is started.

Returns

- ESP_OK
- ESP_ERR_WIFI_NOT_INIT
- ESP_ERR_MESH_NOT_ALLOWED

esp_err_t **esp_mesh_disable_ps**(void)

Disable mesh Power Save function.

Attention This API shall be called before mesh is started.

Returns

- ESP_OK
- ESP_ERR_WIFI_NOT_INIT
- ESP_ERR_MESH_NOT_ALLOWED

bool **esp_mesh_is_ps_enabled**(void)

Check whether the mesh Power Save function is enabled.

Returns true/false

bool **esp_mesh_is_device_active**(void)

Check whether the device is in active state.

- If the device is not in active state, it will neither transmit nor receive frames.

Returns true/false

esp_err_t **esp_mesh_set_active_duty_cycle**(int dev_duty, int dev_duty_type)

Set the device duty cycle and type.

- The range of dev_duty values is 1 to 100. The default value is 10.
- dev_duty = 100, the PS will be stopped.
- dev_duty is better to not less than 5.
- dev_duty_type could be MESH_PS_DEVICE_DUTY_REQUEST or MESH_PS_DEVICE_DUTY_DEMAND.
- If dev_duty_type is set to MESH_PS_DEVICE_DUTY_REQUEST, the device will use a nwk_duty provided by the network.
- If dev_duty_type is set to MESH_PS_DEVICE_DUTY_DEMAND, the device will use the specified dev_duty.

Attention This API can be called at any time after mesh is started.

Parameters

- **dev_duty** –**[in]** device duty cycle
- **dev_duty_type** –**[in]** device PS duty cycle type, not accept MESH_PS_NETWORK_DUTY_MASTER

Returns

- ESP_OK
- ESP_FAIL

esp_err_t **esp_mesh_get_active_duty_cycle**(int *dev_duty, int *dev_duty_type)

Get device duty cycle and type.

Parameters

- **dev_duty** –**[out]** device duty cycle

- **dev_duty_type** –**[out]** device PS duty cycle type

Returns

- ESP_OK

esp_err_t **esp_mesh_set_network_duty_cycle**(int nwk_duty, int duration_mins, int applied_rule)

Set the network duty cycle, duration and rule.

- The range of nwk_duty values is 1 to 100. The default value is 10.
- nwk_duty is the network duty cycle the entire network or the up-link path will use. A device that successfully sets the nwk_duty is known as a NWK-DUTY-MASTER.
- duration_mins specifies how long the specified nwk_duty will be used. Once duration_mins expires, the root will take over as the NWK-DUTY-MASTER. If an existing NWK-DUTY-MASTER leaves the network, the root will take over as the NWK-DUTY-MASTER again.
- duration_mins = (-1) represents nwk_duty will be used until a new NWK-DUTY-MASTER with a different nwk_duty appears.
- Only the root can set duration_mins to (-1).
- If applied_rule is set to MESH_PS_NETWORK_DUTY_APPLIED_ENTIRE, the nwk_duty will be used by the entire network.
- If applied_rule is set to MESH_PS_NETWORK_DUTY_APPLIED_UPLINK, the nwk_duty will only be used by the up-link path nodes.
- The root does not accept MESH_PS_NETWORK_DUTY_APPLIED_UPLINK.
- A nwk_duty with duration_mins(-1) set by the root is the default network duty cycle used by the entire network.

Attention This API can be called at any time after mesh is started.

- In self-organized network, if this API is called before mesh is started in all devices, (1)nwk_duty shall be set to the same value for all devices; (2)duration_mins shall be set to (-1); (3)applied_rule shall be set to MESH_PS_NETWORK_DUTY_APPLIED_ENTIRE; after the voted root appears, the root will become the NWK-DUTY-MASTER and broadcast the nwk_duty and its identity of NWK-DUTY-MASTER.
- If the root is specified (FIXED-ROOT), call this API in the root to provide a default nwk_duty for the entire network.
- After joins the network, any device can call this API to change the nwk_duty, duration_mins or applied_rule.

Parameters

- **nwk_duty** –**[in]** network duty cycle
- **duration_mins** –**[in]** duration (unit: minutes)
- **applied_rule** –**[in]** only support MESH_PS_NETWORK_DUTY_APPLIED_ENTIRE

Returns

- ESP_OK
- ESP_FAIL

esp_err_t **esp_mesh_get_network_duty_cycle**(int *nwk_duty, int *duration_mins, int *dev_duty_type, int *applied_rule)

Get the network duty cycle, duration, type and rule.

Parameters

- **nwk_duty** –**[out]** current network duty cycle
- **duration_mins** –**[out]** the duration of current nwk_duty
- **dev_duty_type** –**[out]** if it includes MESH_PS_DEVICE_DUTY_MASTER, this device is the current NWK-DUTY-MASTER.
- **applied_rule** –**[out]** MESH_PS_NETWORK_DUTY_APPLIED_ENTIRE

Returns

- ESP_OK

int **esp_mesh_get_running_active_duty_cycle**(void)

Get the running active duty cycle.

- The running active duty cycle of the root is 100.
- If duty type is set to MESH_PS_DEVICE_DUTY_REQUEST, the running active duty cycle is nwk_duty provided by the network.
- If duty type is set to MESH_PS_DEVICE_DUTY_DEMAND, the running active duty cycle is dev_duty specified by the users.
- In a mesh network, devices are typically working with a certain duty-cycle (transmitting, receiving and sleep) to reduce the power consumption. The running active duty cycle decides the amount of awake time within a beacon interval. At each start of beacon interval, all devices wake up, broadcast beacons, and transmit packets if they do have pending packets for their parents or for their children. Note that Low-duty-cycle means devices may not be active in most of the time, the latency of data transmission might be greater.

Returns the running active duty cycle

esp_err_t **esp_mesh_ps_duty_signaling**(int fwd_times)

Duty signaling.

Parameters **fwd_times** –**[in]** the times of forwarding duty signaling packets

Returns

- ESP_OK

Unions

union **mesh_addr_t**

#include <esp_mesh.h> Mesh address.

Public Members

uint8_t **addr**[6]

mac address

mip_t **mip**

mip address

union **mesh_event_info_t**

#include <esp_mesh.h> Mesh event information.

Public Members

mesh_event_channel_switch_t **channel_switch**

channel switch

mesh_event_child_connected_t **child_connected**

child connected

mesh_event_child_disconnected_t **child_disconnected**

child disconnected

mesh_event_routing_table_change_t **routing_table**

routing table change

mesh_event_connected_t **connected**

parent connected

mesh_event_disconnected_t **disconnected**

parent disconnected

mesh_event_no_parent_found_t **no_parent**

no parent found

mesh_event_layer_change_t **layer_change**

layer change

mesh_event_toDS_state_t **toDS_state**

toDS state, devices shall check this state firstly before trying to send packets to external IP network. This state indicates right now whether the root is capable of sending packets out. If not, devices had better to wait until this state changes to be MESH_TODS_REACHABLE.

mesh_event_vote_started_t **vote_started**

vote started

mesh_event_root_address_t **root_addr**

root address

mesh_event_root_switch_req_t **switch_req**

root switch request

mesh_event_root_conflict_t **root_conflict**

other powerful root

mesh_event_root_fixed_t **root_fixed**

fixed root

mesh_event_scan_done_t **scan_done**

scan done

mesh_event_network_state_t **network_state**

network state, such as whether current mesh network has a root.

mesh_event_find_network_t **find_network**

network found that can join

mesh_event_router_switch_t **router_switch**

new router information

mesh_event_ps_duty_t **ps_duty**

PS duty information

union **mesh_rc_config_t**

#include <esp_mesh.h> Vote address configuration.

Public Members

int **attempts**

max vote attempts before a new root is elected automatically by mesh network. (min:15, 15 by default)

mesh_addr_t **rc_addr**

a new root address specified by users for API esp_mesh_waive_root()

Structures

struct **mip_t**

IP address and port.

Public Members

ip4_addr_t **ip4**

IP address

uint16_t **port**

port

struct **mesh_event_channel_switch_t**

Channel switch information.

Public Members

uint8_t **channel**

new channel

struct **mesh_event_connected_t**

Parent connected information.

Public Members

wifi_event_sta_connected_t **connected**

parent information, same as Wi-Fi event SYSTEM_EVENT_STA_CONNECTED does

uint16_t **self_layer**

layer

uint8_t **duty**

parent duty

struct **mesh_event_no_parent_found_t**

No parent found information.

Public Members

int **scan_times**

scan times being through

struct **mesh_event_layer_change_t**

Layer change information.

Public Members

uint16_t **new_layer**

new layer

struct **mesh_event_vote_started_t**

vote started information

Public Members

int **reason**

vote reason, vote could be initiated by children or by the root itself

int **attempts**

max vote attempts before stopped

mesh_addr_t **rc_addr**

root address specified by users via API esp_mesh_waive_root()

struct **mesh_event_find_network_t**

find a mesh network that this device can join

Public Members

uint8_t **channel**

channel number of the new found network

uint8_t **router_bssid**[6]

router BSSID

struct **mesh_event_root_switch_req_t**

Root switch request information.

Public Members

int **reason**

root switch reason, generally root switch is initialized by users via API esp_mesh_waive_root()

mesh_addr_t **rc_addr**

the address of root switch requester

struct **mesh_event_root_conflict_t**

Other powerful root address.

Public Members

int8_t **rssi**

rssi with router

uint16_t **capacity**

the number of devices in current network

uint8_t **addr**[6]

other powerful root address

struct **mesh_event_routing_table_change_t**

Routing table change.

Public Members

uint16_t **rt_size_new**

the new value

uint16_t **rt_size_change**

the changed value

struct **mesh_event_root_fixed_t**

Root fixed.

Public Members

bool **is_fixed**

status

struct **mesh_event_scan_done_t**

Scan done event information.

Public Members

uint8_t **number**

the number of APs scanned

struct **mesh_event_network_state_t**

Network state information.

Public Members

bool **is_rootless**

whether current mesh network has a root

struct **mesh_event_ps_duty_t**

PS duty information.

Public Members

uint8_t **duty**

parent or child duty

mesh_event_child_connected_t **child_connected**

child info

struct **mesh_opt_t**

Mesh option.

Public Members

uint8_t **type**

option type

uint16_t **len**

option length

uint8_t ***val**

option value

struct **mesh_data_t**

Mesh data for esp_mesh_send() and esp_mesh_recv()

Public Members

uint8_t ***data**

data

uint16_t **size**

data size

mesh_proto_t **proto**

data protocol

mesh_tos_t **tos**

data type of service

struct **mesh_router_t**

Router configuration.

Public Members

uint8_t **ssid**[32]

SSID

uint8_t **ssid_len**

length of SSID

uint8_t **bssid**[6]

BSSID, if this value is specified, users should also specify "allow_router_switch".

uint8_t **password**[64]

password

bool **allow_router_switch**

if the BSSID is specified and this value is also set, when the router of this specified BSSID fails to be found after "fail" (mesh_attempts_t) times, the whole network is allowed to switch to another router with the same SSID. The new router might also be on a different channel. The default value is false. There is a risk that if the password is different between the new switched router and the previous one, the mesh network could be established but the root will never connect to the new switched router.

struct **mesh_ap_cfg_t**

Mesh softAP configuration.

Public Members

uint8_t **password**[64]

mesh softAP password

uint8_t **max_connection**

max number of stations allowed to connect in, default 6, max 10 = max_connection + non-mesh_max_connectionmax mesh connections

uint8_t **nonmesh_max_connection**

max non-mesh connections

struct **mesh_cfg_t**

Mesh initialization configuration.

Public Members

uint8_t **channel**

channel, the mesh network on

bool **allow_channel_switch**

if this value is set, when "fail" (mesh_attempts_t) times is reached, device will change to a full channel scan for a network that could join. The default value is false.

mesh_addr_t **mesh_id**

mesh network identification

mesh_router_t **router**

router configuration

mesh_ap_cfg_t **mesh_ap**

mesh softAP configuration

const mesh_crypto_funcs_t ***crypto_funcs**

crypto functions

struct **mesh_vote_t**

Vote.

Public Members

float **percentage**

vote percentage threshold for approval of being a root

bool **is_rc_specified**

if true, rc_addr shall be specified (Unimplemented). if false, attempts value shall be specified to make network start root election.

mesh_rc_config_t **config**

vote address configuration

struct **mesh_tx_pending_t**

The number of packets pending in the queue waiting to be sent by the mesh stack.

Public Members

int **to_parent**

to parent queue

int **to_parent_p2p**

to parent (P2P) queue

int **to_child**

to child queue

int **to_child_p2p**

to child (P2P) queue

int **mgmt**

management queue

int **broadcast**

broadcast and multicast queue

struct **mesh_rx_pending_t**

The number of packets available in the queue waiting to be received by applications.

Public Members

int **toDS**

to external DS

int **toSelf**

to self

Macros

MESH_ROOT_LAYER

root layer value

MESH_MTU

max transmit unit(in bytes)

MESH_MPS

max payload size(in bytes)

ESP_ERR_MESH_WIFI_NOT_START

Mesh error code definition.

Wi-Fi isn't started

ESP_ERR_MESH_NOT_INIT

mesh isn't initialized

ESP_ERR_MESH_NOT_CONFIG

mesh isn't configured

ESP_ERR_MESH_NOT_START
mesh isn't started

ESP_ERR_MESH_NOT_SUPPORT
not supported yet

ESP_ERR_MESH_NOT_ALLOWED
operation is not allowed

ESP_ERR_MESH_NO_MEMORY
out of memory

ESP_ERR_MESH_ARGUMENT
illegal argument

ESP_ERR_MESH_EXCEED_MTU
packet size exceeds MTU

ESP_ERR_MESH_TIMEOUT
timeout

ESP_ERR_MESH_DISCONNECTED
disconnected with parent on station interface

ESP_ERR_MESH_QUEUE_FAIL
queue fail

ESP_ERR_MESH_QUEUE_FULL
queue full

ESP_ERR_MESH_NO_PARENT_FOUND
no parent found to join the mesh network

ESP_ERR_MESH_NO_ROUTE_FOUND
no route found to forward the packet

ESP_ERR_MESH_OPTION_NULL
no option found

ESP_ERR_MESH_OPTION_UNKNOWN
unknown option

ESP_ERR_MESH_XON_NO_WINDOW
no window for software flow control on upstream

ESP_ERR_MESH_INTERFACE
low-level Wi-Fi interface error

ESP_ERR_MESH_DISCARD_DUPLICATE

discard the packet due to the duplicate sequence number

ESP_ERR_MESH_DISCARD

discard the packet

ESP_ERR_MESH_VOTING

vote in progress

ESP_ERR_MESH_XMIT

XMIT

ESP_ERR_MESH_QUEUE_READ

error in reading queue

ESP_ERR_MESH_PS

mesh PS is not specified as enable or disable

ESP_ERR_MESH_RECV_RELEASE

release esp_mesh_recv_toDS

MESH_DATA_ENC

Flags bitmap for esp_mesh_send() and esp_mesh_recv()

data encrypted (Unimplemented)

MESH_DATA_P2P

point-to-point delivery over the mesh network

MESH_DATA_FROMDS

receive from external IP network

MESH_DATA_TODS

identify this packet is target to external IP network

MESH_DATA_NONBLOCK

esp_mesh_send() non-block

MESH_DATA_DROP

in the situation of the root having been changed, identify this packet can be dropped by new root

MESH_DATA_GROUP

identify this packet is target to a group address

MESH_OPT_SEND_GROUP

Option definitions for esp_mesh_send() and esp_mesh_recv()

data transmission by group; used with esp_mesh_send() and shall have payload

MESH_OPT_RECV_DS_ADDR

return a remote IP address; used with esp_mesh_send() and esp_mesh_recv()

MESH_ASSOC_FLAG_VOTE_IN_PROGRESS

Flag of mesh networking IE.

vote in progress

MESH_ASSOC_FLAG_NETWORK_FREE

no root in current network

MESH_ASSOC_FLAG_ROOTS_FOUND

root conflict is found

MESH_ASSOC_FLAG_ROOT_FIXED

fixed root

MESH_PS_DEVICE_DUTY_REQUEST

Mesh PS (Power Save) duty cycle type.

requests to join a network PS without specifying a device duty cycle. After the device joins the network, a network duty cycle will be provided by the network

MESH_PS_DEVICE_DUTY_DEMAND

requests to join a network PS and specifies a demanded device duty cycle

MESH_PS_NETWORK_DUTY_MASTER

indicates the device is the NWK-DUTY-MASTER (network duty cycle master)

MESH_PS_NETWORK_DUTY_APPLIED_ENTIRE

Mesh PS (Power Save) duty cycle applied rule.

MESH_PS_NETWORK_DUTY_APPLIED_UPLINK

MESH_INIT_CONFIG_DEFAULT()

Type Definitions

typedef *mesh_addr_t* **mesh_event_root_address_t**

Root address.

typedef *wifi_event_sta_disconnected_t* **mesh_event_disconnected_t**

Parent disconnected information.

typedef *wifi_event_ap_staconnected_t* **mesh_event_child_connected_t**

Child connected information.

typedef *wifi_event_ap_stadisconnected_t* **mesh_event_child_disconnected_t**

Child disconnected information.

typedef *wifi_event_sta_connected_t* **mesh_event_router_switch_t**

New router information.

Enumerations

enum **mesh_event_id_t**

Enumerated list of mesh event id.

Values:

enumerator **MESH_EVENT_STARTED**

mesh is started

enumerator **MESH_EVENT_STOPPED**

mesh is stopped

enumerator **MESH_EVENT_CHANNEL_SWITCH**

channel switch

enumerator **MESH_EVENT_CHILD_CONNECTED**

a child is connected on softAP interface

enumerator **MESH_EVENT_CHILD_DISCONNECTED**

a child is disconnected on softAP interface

enumerator **MESH_EVENT_ROUTING_TABLE_ADD**

routing table is changed by adding newly joined children

enumerator **MESH_EVENT_ROUTING_TABLE_REMOVE**

routing table is changed by removing leave children

enumerator **MESH_EVENT_PARENT_CONNECTED**

parent is connected on station interface

enumerator **MESH_EVENT_PARENT_DISCONNECTED**

parent is disconnected on station interface

enumerator **MESH_EVENT_NO_PARENT_FOUND**

no parent found

enumerator **MESH_EVENT_LAYER_CHANGE**

layer changes over the mesh network

enumerator **MESH_EVENT_TODS_STATE**

state represents whether the root is able to access external IP network

enumerator **MESH_EVENT_VOTE_STARTED**

the process of voting a new root is started either by children or by the root

enumerator **MESH_EVENT_VOTE_STOPPED**

the process of voting a new root is stopped

enumerator **MESH_EVENT_ROOT_ADDRESS**

the root address is obtained. It is posted by mesh stack automatically.

enumerator **MESH_EVENT_ROOT_SWITCH_REQ**

root switch request sent from a new voted root candidate

enumerator **MESH_EVENT_ROOT_SWITCH_ACK**

root switch acknowledgment responds the above request sent from current root

enumerator **MESH_EVENT_ROOT_ASKED_YIELD**

the root is asked yield by a more powerful existing root. If self organized is disabled and this device is specified to be a root by users, users should set a new parent for this device. if self organized is enabled, this device will find a new parent by itself, users could ignore this event.

enumerator **MESH_EVENT_ROOT_FIXED**

when devices join a network, if the setting of Fixed Root for one device is different from that of its parent, the device will update the setting the same as its parent' s. Fixed Root Setting of each device is variable as that setting changes of the root.

enumerator **MESH_EVENT_SCAN_DONE**

if self-organized networking is disabled, user can call esp_wifi_scan_start() to trigger this event, and add the corresponding scan done handler in this event.

enumerator **MESH_EVENT_NETWORK_STATE**

network state, such as whether current mesh network has a root.

enumerator **MESH_EVENT_STOP_RECONNECTION**

the root stops reconnecting to the router and non-root devices stop reconnecting to their parents.

enumerator **MESH_EVENT_FIND_NETWORK**

when the channel field in mesh configuration is set to zero, mesh stack will perform a full channel scan to find a mesh network that can join, and return the channel value after finding it.

enumerator **MESH_EVENT_ROUTER_SWITCH**

if users specify BSSID of the router in mesh configuration, when the root connects to another router with the same SSID, this event will be posted and the new router information is attached.

enumerator **MESH_EVENT_PS_PARENT_DUTY**

parent duty

enumerator **MESH_EVENT_PS_CHILD_DUTY**

child duty

enumerator **MESH_EVENT_PS_DEVICE_DUTY**

device duty

enumerator **MESH_EVENT_MAX**

enum **mesh_type_t**

Device type.

Values:

enumerator **MESH_IDLE**

hasn't joined the mesh network yet

enumerator **MESH_ROOT**

the only sink of the mesh network. Has the ability to access external IP network

enumerator **MESH_NODE**

intermediate device. Has the ability to forward packets over the mesh network

enumerator **MESH_LEAF**

has no forwarding ability

enumerator **MESH_STA**

connect to router with a standlone Wi-Fi station mode, no network expansion capability

enum **mesh_proto_t**

Protocol of transmitted application data.

Values:

enumerator **MESH_PROTO_BIN**

binary

enumerator **MESH_PROTO_HTTP**

HTTP protocol

enumerator **MESH_PROTO_JSON**

JSON format

enumerator **MESH_PROTO_MQTT**

MQTT protocol

enumerator **MESH_PROTO_AP**

IP network mesh communication of node's AP interface

enumerator **MESH_PROTO_STA**

IP network mesh communication of node's STA interface

enum **mesh_tos_t**

For reliable transmission, mesh stack provides three type of services.

Values:

enumerator **MESH_TOS_P2P**

provide P2P (point-to-point) retransmission on mesh stack by default

enumerator **MESH_TOS_E2E**

provide E2E (end-to-end) retransmission on mesh stack (Unimplemented)

enumerator **MESH_TOS_DEF**

no retransmission on mesh stack

enum **mesh_vote_reason_t**

Vote reason.

Values:

enumerator **MESH_VOTE_REASON_ROOT_INITIATED**

vote is initiated by the root

enumerator **MESH_VOTE_REASON_CHILD_INITIATED**

vote is initiated by children

enum **mesh_disconnect_reason_t**

Mesh disconnect reason code.

Values:

enumerator **MESH_REASON_CYCLIC**

cyclic is detected

enumerator **MESH_REASON_PARENT_IDLE**

parent is idle

enumerator **MESH_REASON_LEAF**

the connected device is changed to a leaf

enumerator **MESH_REASON_DIFF_ID**

in different mesh ID

enumerator **MESH_REASON_ROOTS**

root conflict is detected

enumerator **MESH_REASON_PARENT_STOPPED**

parent has stopped the mesh

enumerator **MESH_REASON_SCAN_FAIL**

scan fail

enumerator **MESH_REASON_IE_UNKNOWN**

unknown IE

enumerator **MESH_REASON_WAIVE_ROOT**

waive root

enumerator **MESH_REASON_PARENT_WORSE**

parent with very poor RSSI

enumerator **MESH_REASON_EMPTY_PASSWORD**

use an empty password to connect to an encrypted parent

enumerator **MESH_REASON_PARENT_UNENCRYPTED**

connect to an unencrypted parent/router

enum **esp_mesh_topology_t**

Mesh topology.

Values:

enumerator **MESH_TOPO_TREE**

tree topology

enumerator **MESH_TOPO_CHAIN**

chain topology

enum **mesh_event_toDS_state_t**

The reachability of the root to a DS (distribute system)

Values:

enumerator **MESH_TODS_UNREACHABLE**

the root isn't able to access external IP network

enumerator **MESH_TODS_REACHABLE**

the root is able to access external IP network

Wi-Fi Easy Connect™ (DPP)

Wi-Fi Easy Connect™, also known as Device Provisioning Protocol (DPP) or Easy Connect, is a provisioning protocol certified by Wi-Fi Alliance. It is a secure and standardized provisioning protocol for configuration of Wi-Fi Devices. With Easy Connect adding a new device to a network is as simple as scanning a QR Code. This reduces complexity and enhances user experience while onboarding devices without UI like Smart Home and IoT products. Unlike old protocols like WiFi Protected Setup (WPS), Wi-Fi Easy Connect incorporates strong encryption through public key cryptography to ensure networks remain secure as new devices are added. Easy Connect brings many benefits in the User Experience:

- Simple and intuitive to use; no lengthy instructions to follow for new device setup
- No need to remember and enter passwords into the device being provisioned
- Works with electronic or printed QR codes, or human-readable strings
- Supports both WPA2 and WPA3 networks

Please refer to Wi-Fi Alliance's official page on Easy Connect for more information.

ESP32 supports Enrollee mode of Easy Connect with QR Code as the provisioning method. A display is required to display this QR Code. Users can scan this QR Code using their capable device and provision the ESP32 to their Wi-Fi network. The provisioning device needs to be connected to the AP which need not support Wi-Fi Easy Connect™. Easy Connect is still an evolving protocol. Of known platforms that support the QR Code method are some Android smartphones with Android 10 or higher. To use Easy Connect no additional App needs to be installed on the supported smartphone.

Application Example Example on how to provision ESP32 using a supported smartphone: wifi/wifi_easy_connect/dpp-enrollee.

API Reference

Header File

- components/wpa_supplicant/esp_supplicant/include/esp_dpp.h

Functions

esp_err_t **esp_supp_dpp_init** (*esp_supp_dpp_event_cb_t* evt_cb)

Initialize DPP Supplicant.

Starts DPP Supplicant and initializes related Data Structures.

return

- ESP_OK: Success
- ESP_FAIL: Failure

Parameters **evt_cb** –Callback function to receive DPP related events

void **esp_supp_dpp_deinit** (void)

De-initalize DPP Supplicant.

Frees memory from DPP Supplicant Data Structures.

esp_err_t **esp_supp_dpp_bootstrap_gen** (const char *chan_list, *esp_supp_dpp_bootstrap_t* type, const char *key, const char *info)

Generates Bootstrap Information as an Enrollee.

Generates Out Of Band Bootstrap information as an Enrollee which can be used by a DPP Configurator to provision the Enrollee.

Parameters

- **chan_list** –List of channels device will be available on for listening
- **type** –Bootstrap method type, only QR Code method is supported for now.
- **key** –(Optional) Private Key used to generate a Bootstrapping Public Key
- **info** –(Optional) Ancilliary Device Information like Serial Number

Returns

- ESP_OK: Success
- ESP_FAIL: Failure

esp_err_t **esp_supp_dpp_start_listen** (void)

Start listening on Channels provided during esp_supp_dpp_bootstrap_gen.

Listens on every Channel from Channel List for a pre-defined wait time.

Returns

- ESP_OK: Success
- ESP_FAIL: Generic Failure
- ESP_ERR_INVALID_STATE: ROC attempted before WiFi is started
- ESP_ERR_NO_MEM: Memory allocation failed while posting ROC request

void **esp_supp_dpp_stop_listen** (void)

Stop listening on Channels.

Stops listening on Channels and cancels ongoing listen operation.

Macros

ESP_ERR_DPP_FAILURE

Generic failure during DPP Operation

ESP_ERR_DPP_TX_FAILURE

DPP Frame Tx failed OR not Acked

ESP_ERR_DPP_INVALID_ATTR

Encountered invalid DPP Attribute

Type Definitions

typedef enum *dpp_bootstrap_type* **esp_supp_dpp_bootstrap_t**

Types of Bootstrap Methods for DPP.

typedef void (***esp_supp_dpp_event_cb_t**)(*esp_supp_dpp_event_t* evt, void *data)

Callback function for receiving DPP Events from Supplicant.

Callback function will be called with DPP related information.

Param evt DPP event ID
Param data Event data payload

Enumerations

enum **dpp_bootstrap_type**

Types of Bootstrap Methods for DPP.

Values:

enumerator **DPP_BOOTSTRAP_QR_CODE**

QR Code Method

enumerator **DPP_BOOTSTRAP_PKEX**

Proof of Knowledge Method

enumerator **DPP_BOOTSTRAP_NFC_URI**

NFC URI record Method

enum **esp_supp_dpp_event_t**

Types of Callback Events received from DPP Supplicant.

Values:

enumerator **ESP_SUPP_DPP_URI_READY**

URI is ready through Bootstrapping

enumerator **ESP_SUPP_DPP_CFG_RECVD**

Config received via DPP Authentication

enumerator **ESP_SUPP_DPP_FAIL**

DPP Authentication failure

Code examples for the Wi-Fi API are provided in the wifi directory of ESP-IDF examples.

Code examples for ESP-WIFI-MESH are provided in the mesh directory of ESP-IDF examples.

2.2.2 Ethernet

Ethernet

Overview ESP-IDF provides a set of consistent and flexible APIs to support both internal Ethernet MAC (EMAC) controller and external SPI-Ethernet modules.

This programming guide is split into the following sections:

1. *Basic Ethernet Concepts*
2. *Configure MAC and PHY*
3. *Connect Driver to TCP/IP Stack*
4. *Misc control of Ethernet driver*

Basic Ethernet Concepts Ethernet is an asynchronous Carrier Sense Multiple Access with Collision Detect (CSMA/CD) protocol/interface. It is generally not well suited for low power applications. However, with ubiquitous deployment, internet connectivity, high data rates and limitless rage expandability, Ethernet can accommodate nearly all wired communications.

Normal IEEE 802.3 compliant Ethernet frames are between 64 and 1518 bytes in length. They are made up of five or six different fields: a destination MAC address (DA), a source MAC address (SA), a type/length field, data payload, an optional padding field and a Cyclic Redundancy Check (CRC). Additionally, when transmitted on the Ethernet medium, a 7-byte preamble field and Start-of-Frame (SOF) delimiter byte are appended to the beginning of the Ethernet packet.

Thus the traffic on the twist-pair cabling will appear as shown blow:

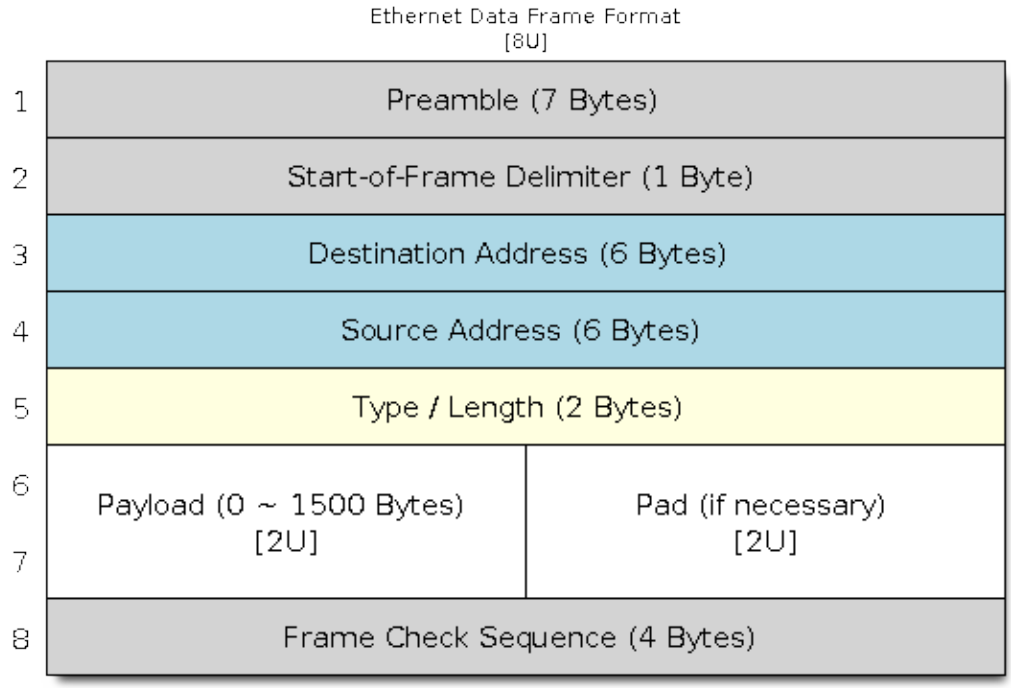

Fig. 4: Ethernet Data Frame Format

Preamble and Start-of-Frame Delimiter The preamble contains seven bytes of `55H`, it allows the receiver to lock onto the stream of data before the actual frame arrives. The Start-of-Frame Delimiter (SFD) is a binary sequence `10101011` (as seen on the physical medium). It is sometimes considered to be part of the preamble.

When transmitting and receiving data, the preamble and SFD bytes will automatically be generated or stripped from the packets.

Destination Address The destination address field contains a 6-byte length MAC address of the device that the packet is directed to. If the Least Significant bit in the first byte of the MAC address is set, the address is a multi-cast destination. For example, 01-00-00-00-F0-00 and 33-45-67-89-AB-CD are multi-cast addresses, while 00-00-00-00-F0-00 and 32-45-67-89-AB-CD are not. Packets with multi-cast destination addresses are designed to arrive and be important to a selected group of Ethernet nodes. If the destination address field is the reserved multi-cast address, i.e. FF-FF-FF-FF-FF-FF, the packet is a broadcast packet and it will be directed to everyone sharing the network. If the Least Significant bit in the first byte of the MAC address is clear, the address is a uni-cast address and will be designed for usage by only the addressed node.

Normally the EMAC controller incorporates receive filters which can be used to discard or accept packets with multi-cast, broadcast and/or uni-cast destination addresses. When transmitting packets, the host controller is responsible for writing the desired destination address into the transmit buffer.

Source Address The source address field contains a 6-byte length MAC address of the node which created the Ethernet packet. Users of Ethernet must generate a unique MAC address for each controller used. MAC addresses consist of two portions. The first three bytes are known as the Organizationally Unique Identifier (OUI). OUIs are distributed by the IEEE. The last three bytes are address bytes at the discretion of the company that purchased the OUI. More information about MAC Address used in ESP-IDF, please see *MAC Address Allocation*.

When transmitting packets, the assigned source MAC address must be written into the transmit buffer by the host controller.

Type / Length The type/length field is a 2-byte field, if the value in this field is <= 1500 (decimal), it is considered a length field and it specifies the amount of non-padding data which follows in the data field. If the value is >= 1536, it represents the protocol the following packet data belongs to. The following are the most common type values:

- IPv4 = 0800H
- IPv6 = 86DDH
- ARP = 0806H

Users implementing proprietary networks may choose to treat this field as a length field, while applications implementing protocols such as the Internet Protocol (IP) or Address Resolution Protocol (ARP), should program this field with the appropriate type defined by the protocol' s specification when transmitting packets.

Payload The payload field is a variable length field, anywhere from 0 to 1500 bytes. Larger data packets will violate Ethernet standards and will be dropped by most Ethernet nodes. This field contains the client data, such as an IP datagram.

Padding and FCS The padding field is a variable length field added to meet IEEE 802.3 specification requirements when small data payloads are used. The DA, SA, type, payload and padding of an Ethernet packet must be no smaller than 60 bytes. Adding the required 4-byte FCS field, packets must be no smaller than 64 bytes. If the data field is less than 46 bytes long, a padding field is required.

The FCS field is a 4-byte field which contains an industry standard 32-bit CRC calculated with the data from the DA, SA, type, payload and padding fields. Given the complexity of calculating a CRC, the hardware normally will automatically generate a valid CRC and transmit it. Otherwise, the host controller must generate the CRC and place it in the transmit buffer.

Normally, the host controller does not need to concern itself with padding and the CRC which the hardware EMAC will also be able to automatically generate when transmitting and verify when receiving. However, the padding and

CRC fields will be written into the receive buffer when packets arrive, so they may be evaluated by the host controller if needed.

Note: Besides the basic data frame described above, there're two other common frame types in 10/100 Mbps Ethernet: control frames and VLAN tagged frames. They're not supported in ESP-IDF.

Configure MAC and PHY Ethernet driver is composed of two parts: MAC and PHY.

The communication between MAC and PHY can have diverse choices: **MII** (Media Independent Interface), **RMII** (Reduced Media Independent Interface) and etc.

One of the obvious difference between MII and RMII is the signal consumption. For MII, it usually costs up to 18 signals. Instead, RMII interface can reduce the consumption to 9.

In RMII mode, both the receiver and transmitter signals are referenced to the `REF_CLK`. **REF_CLK must be stable during any access to PHY and MAC**. Generally there're three ways to generate the `REF_CLK` depending on the PHY device in your design:

- Some PHY chip can derive the `REF_CLK` from its external connected 25MHz crystal oscillator (as seen the option *a* in the picture). In this case, you should select `CONFIG_ETH_RMII_CLK_INPUT` in *CONFIG_ETH_RMII_CLK_MODE*.
- Some PHY chip uses an external connected 50MHz crystal oscillator or other clock source, which can also be used as the `REF_CLK` for MAC side (as seen the option *b* in the picture). In this case, you still need to select `CONFIG_ETH_RMII_CLK_INPUT` in *CONFIG_ETH_RMII_CLK_MODE*.
- Some EMAC controller can generate the `REF_CLK` using its internal high precision PLL (as seen the option *c* in the picture). In this case, you should select `CONFIG_ETH_RMII_CLK_OUTPUT` in *CONFIG_ETH_RMII_CLK_MODE*.

Note: `REF_CLK` is configured via Project Configuration as described above by default. However, it can be overwritten from user application code by appropriately setting `interface` and `clock_config` members of *`eth_mac_config_t`* structure. See *`emac_rmii_clock_mode_t`* and *`emac_rmii_clock_gpio_t`* for more details.

Warning: If the RMII clock mode is selected to `CONFIG_ETH_RMII_CLK_OUTPUT`, then `GPIO0` can be used to output the `REF_CLK` signal. See *CONFIG_ETH_RMII_CLK_OUTPUT_GPIO0* for more information. What's more, if you're not using PSRAM in your design, GPIO16 and GPIO17 are also available to output the reference clock. See *CONFIG_ETH_RMII_CLK_OUT_GPIO* for more information.

If the RMII clock mode is selected to `CONFIG_ETH_RMII_CLK_INPUT`, then `GPIO0` is the only choice to input the `REF_CLK` signal. Please note that, `GPIO0` is also an important strapping GPIO on ESP32. If GPIO0 samples a low level during power up, ESP32 will go into download mode. The system will get halted until a manually reset. The workaround of this issue is disabling the `REF_CLK` in hardware by default, so that the strapping pin won't be interfered by other signals in boot stage. Then re-enable the `REF_CLK` in Ethernet driver installation stage. The ways to disable the `REF_CLK` signal can be:

- Disable or power down the crystal oscillator (as the case *b* in the picture).
- Force the PHY device in reset status (as the case *a* in the picture). **This could fail for some PHY device** (i.e. it still outputs signal to GPIO0 even in reset state).

No matter which RMII clock mode you select, you really need to take care of the signal integrity of REF_CLK in your hardware design! Keep the trace as short as possible. Keep it away from RF devices. Keep it away from inductor elements.

Note: ESP-IDF only supports the RMII interface (i.e. always select `CONFIG_ETH_PHY_INTERFACE_RMII` in Kconfig option *CONFIG_ETH_PHY_INTERFACE*).

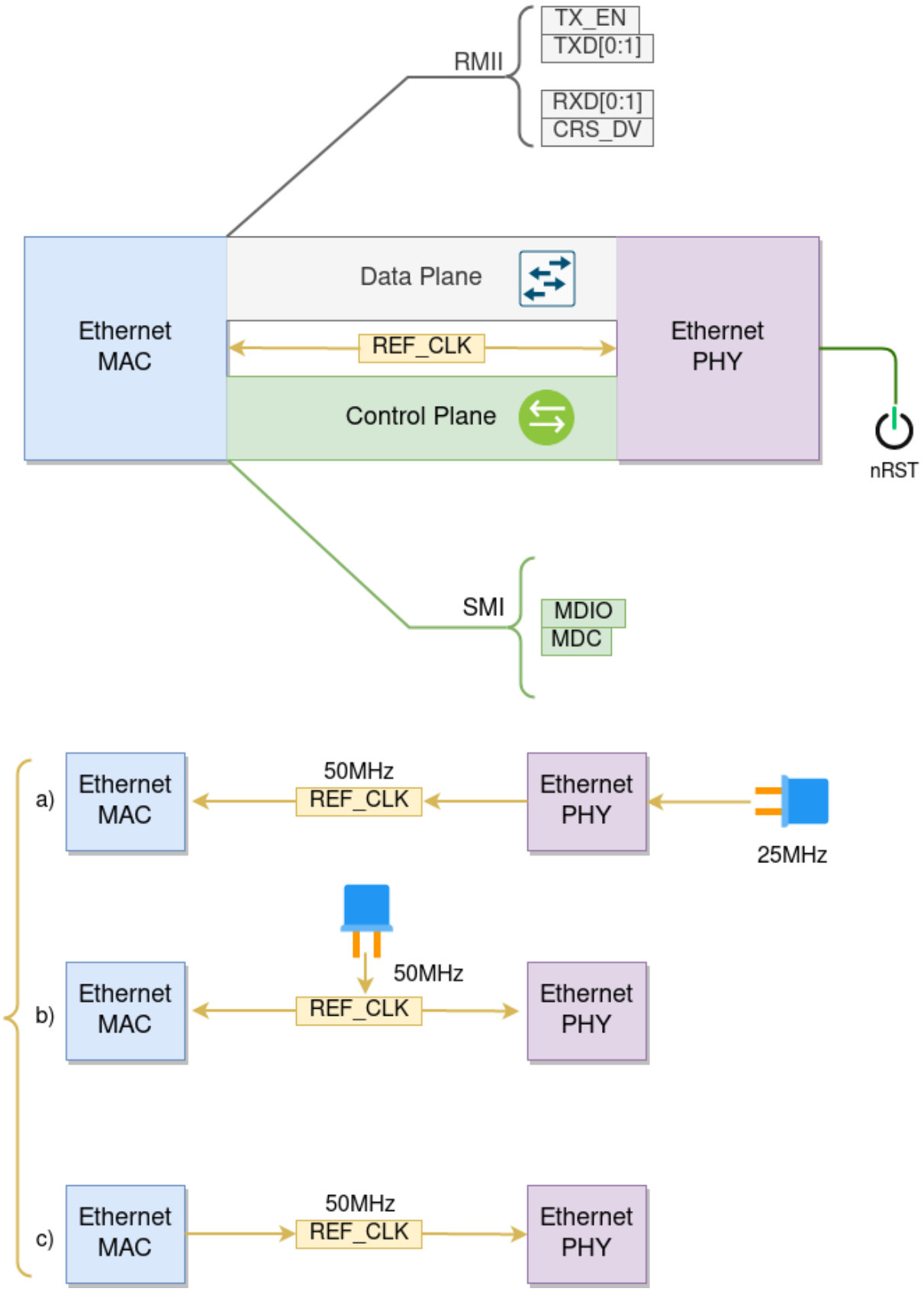

Fig. 5: Ethernet RMII Interface

Signals used in data plane are fixed to specific GPIOs via MUX, they can't be modified to other GPIOs. Signals used in control plane can be routed to any free GPIOs via Matrix. Please refer to *ESP32-Ethernet-Kit* for hardware design example.

We need to setup necessary parameters for MAC and PHY respectively based on your Ethernet board design and then combine the two together, completing the driver installation.

Configuration for MAC is described in *eth_mac_config_t*, including:

- `sw_reset_timeout_ms`: software reset timeout value, in milliseconds, typically MAC reset should be finished within 100ms.
- `rx_task_stack_size` and `rx_task_prio`: the MAC driver creates a dedicated task to process incoming packets, these two parameters are used to set the stack size and priority of the task.
- `flags`: specifying extra features that the MAC driver should have, it could be useful in some special situations. The value of this field can be OR'd with macros prefixed with `ETH_MAC_FLAG_`. For example, if the MAC driver should work when cache is disabled, then you should configure this field with *ETH_MAC_FLAG_WORK_WITH_CACHE_DISABLE*.
- `smi_mdc_gpio_num` and `smi_mdio_gpio_num`: the GPIO number used to connect the SMI signals.
- `interface`: configuration of MAC Data interface to PHY (MII/RMII).
- `clock_config`: configuration of EMAC Interface clock (`REF_CLK` mode and GPIO number in case of RMII).

Configuration for PHY is described in *eth_phy_config_t*, including:

- `phy_addr`: multiple PHY device can share the same SMI bus, so each PHY needs a unique address. Usually this address is configured during hardware design by pulling up/down some PHY strapping pins. You can set the value from 0 to 15 based on your Ethernet board. Especially, if the SMI bus is shared by only one PHY device, setting this value to -1 can enable the driver to detect the PHY address automatically.
- `reset_timeout_ms`: reset timeout value, in milliseconds, typically PHY reset should be finished within 100ms.
- `autonego_timeout_ms`: auto-negotiation timeout value, in milliseconds. Ethernet driver will start negotiation with the peer Ethernet node automatically, to determine to duplex and speed mode. This value usually depends on the ability of the PHY device on your board.
- `reset_gpio_num`: if your board also connect the PHY reset pin to one of the GPIO, then set it here. Otherwise, set this field to -1.

ESP-IDF provides a default configuration for MAC and PHY in macro *ETH_MAC_DEFAULT_CONFIG* and *ETH_PHY_DEFAULT_CONFIG*.

Create MAC and PHY Instance Ethernet driver is implemented in an Object-Oriented style. Any operation on MAC and PHY should be based on the instance of them two.

Internal EMAC + External PHY

```
eth_mac_config_t mac_config = ETH_MAC_DEFAULT_CONFIG();       // apply default MAC␣
↪configuration
mac_config.smi_mdc_gpio_num = CONFIG_EXAMPLE_ETH_MDC_GPIO;    // alter the GPIO␣
↪used for MDC signal
mac_config.smi_mdio_gpio_num = CONFIG_EXAMPLE_ETH_MDIO_GPIO; // alter the GPIO␣
↪used for MDIO signal
esp_eth_mac_t *mac = esp_eth_mac_new_esp32(&mac_config);      // create MAC instance

eth_phy_config_t phy_config = ETH_PHY_DEFAULT_CONFIG();       // apply default PHY␣
↪configuration
phy_config.phy_addr = CONFIG_EXAMPLE_ETH_PHY_ADDR;            // alter the PHY␣
↪address according to your board design
phy_config.reset_gpio_num = CONFIG_EXAMPLE_ETH_PHY_RST_GPIO; // alter the GPIO␣
↪used for PHY reset
```

(continues on next page)

(continued from previous page)

```
esp_eth_phy_t *phy = esp_eth_phy_new_ip101(&phy_config);      // create PHY instance
// ESP-IDF officially supports several different Ethernet PHY chip driver
// esp_eth_phy_t *phy = esp_eth_phy_new_rtl8201(&phy_config);
// esp_eth_phy_t *phy = esp_eth_phy_new_lan8720(&phy_config);
// esp_eth_phy_t *phy = esp_eth_phy_new_dp83848(&phy_config);
```

Optional Runtime MAC Clock Configuration EMAC `REF_CLK` can be optionally configured from user application code.

```
eth_mac_config_t mac_config = ETH_MAC_DEFAULT_CONFIG(); // apply default MAC␣
↪configuration

// ...

mac_config.interface = EMAC_DATA_INTERFACE_RMII; // alter EMAC Data Interface
mac_config.clock_config.rmii.clock_mode = EMAC_CLK_OUT; // select EMAC REF_CLK mode
mac_config.clock_config.rmii.clock_gpio = EMAC_CLK_OUT_GPIO; // select GPIO number␣
↪used to input/output EMAC REF_CLK
esp_eth_mac_t *mac = esp_eth_mac_new_esp32(&mac_config); // create MAC instance
```

SPI-Ethernet Module

```
eth_mac_config_t mac_config = ETH_MAC_DEFAULT_CONFIG();       // apply default MAC␣
↪configuration
eth_phy_config_t phy_config = ETH_PHY_DEFAULT_CONFIG();       // apply default PHY␣
↪configuration
phy_config.phy_addr = CONFIG_EXAMPLE_ETH_PHY_ADDR;            // alter the PHY␣
↪address according to your board design
phy_config.reset_gpio_num = CONFIG_EXAMPLE_ETH_PHY_RST_GPIO; // alter the GPIO␣
↪used for PHY reset
// Install GPIO interrupt service (as the SPI-Ethernet module is interrupt driven)
gpio_install_isr_service(0);
// SPI bus configuration
spi_device_handle_t spi_handle = NULL;
spi_bus_config_t buscfg = {
    .miso_io_num = CONFIG_EXAMPLE_ETH_SPI_MISO_GPIO,
    .mosi_io_num = CONFIG_EXAMPLE_ETH_SPI_MOSI_GPIO,
    .sclk_io_num = CONFIG_EXAMPLE_ETH_SPI_SCLK_GPIO,
    .quadwp_io_num = -1,
    .quadhd_io_num = -1,
};
ESP_ERROR_CHECK(spi_bus_initialize(CONFIG_EXAMPLE_ETH_SPI_HOST, &buscfg, 1));
// Allocate SPI device from the bus
spi_device_interface_config_t devcfg = {
    .command_bits = 1,
    .address_bits = 7,
    .mode = 0,
    .clock_speed_hz = CONFIG_EXAMPLE_ETH_SPI_CLOCK_MHZ * 1000 * 1000,
    .spics_io_num = CONFIG_EXAMPLE_ETH_SPI_CS_GPIO,
    .queue_size = 20
};
ESP_ERROR_CHECK(spi_bus_add_device(CONFIG_EXAMPLE_ETH_SPI_HOST, &devcfg, &spi_
↪handle));
/* dm9051 ethernet driver is based on spi driver */
eth_dm9051_config_t dm9051_config = ETH_DM9051_DEFAULT_CONFIG(spi_handle);
dm9051_config.int_gpio_num = CONFIG_EXAMPLE_ETH_SPI_INT_GPIO;
esp_eth_mac_t *mac = esp_eth_mac_new_dm9051(&dm9051_config, &mac_config);
esp_eth_phy_t *phy = esp_eth_phy_new_dm9051(&phy_config);
```

Note:

- When creating MAC and PHY instance for SPI-Ethernet modules (e.g. DM9051), the constructor function must have the same suffix (e.g. *esp_eth_mac_new_dm9051* and *esp_eth_phy_new_dm9051*). This is because we don't have other choices but the integrated PHY.
- We have to create an SPI device handle firstly and then pass it to the MAC constructor function. More instructions on creating SPI device handle, please refer to *SPI Master*.
- The SPI device configuration (i.e. *spi_device_interface_config_t*) can be different for other Ethernet modules. Please check out your module's spec and the examples in esp-idf.

Install Driver To install the Ethernet driver, we need to combine the instance of MAC and PHY and set some additional high-level configurations (i.e. not specific to either MAC or PHY) in `esp_eth_config_t`:

- `mac`: instance that created from MAC generator (e.g. `esp_eth_mac_new_esp32()`).
- `phy`: instance that created from PHY generator (e.g. `esp_eth_phy_new_ip101()`).
- `check_link_period_ms`: Ethernet driver starts an OS timer to check the link status periodically, this field is used to set the interval, in milliseconds.
- `stack_input`: In most of Ethernet IoT applications, any Ethernet frame that received by driver should be passed to upper layer (e.g. TCP/IP stack). This field is set to a function which is responsible to deal with the incoming frames. You can even update this field at runtime via function `esp_eth_update_input_path()` after driver installation.
- `on_lowlevel_init_done` and `on_lowlevel_deinit_done`: These two fields are used to specify the hooks which get invoked when low level hardware has been initialized or de-initialized.

ESP-IDF provides a default configuration for driver installation in macro `ETH_DEFAULT_CONFIG`.

```
esp_eth_config_t config = ETH_DEFAULT_CONFIG(mac, phy); // apply default driver␣
↪configuration
esp_eth_handle_t eth_handle = NULL; // after driver installed, we will get the␣
↪handle of the driver
esp_eth_driver_install(&config, &eth_handle); // install driver
```

Ethernet driver also includes event-driven model, which will send useful and important event to user space. We need to initialize the event loop before installing the Ethernet driver. For more information about event-driven programming, please refer to *ESP Event*.

```
/** Event handler for Ethernet events */
static void eth_event_handler(void *arg, esp_event_base_t event_base,
                              int32_t event_id, void *event_data)
{
    uint8_t mac_addr[6] = {0};
    /* we can get the ethernet driver handle from event data */
    esp_eth_handle_t eth_handle = *(esp_eth_handle_t *)event_data;

    switch (event_id) {
    case ETHERNET_EVENT_CONNECTED:
        esp_eth_ioctl(eth_handle, ETH_CMD_G_MAC_ADDR, mac_addr);
        ESP_LOGI(TAG, "Ethernet Link Up");
        ESP_LOGI(TAG, "Ethernet HW Addr %02x:%02x:%02x:%02x:%02x:%02x",
                 mac_addr[0], mac_addr[1], mac_addr[2], mac_addr[3], mac_
↪addr[4], mac_addr[5]);
        break;
    case ETHERNET_EVENT_DISCONNECTED:
        ESP_LOGI(TAG, "Ethernet Link Down");
        break;
    case ETHERNET_EVENT_START:
        ESP_LOGI(TAG, "Ethernet Started");
        break;
    case ETHERNET_EVENT_STOP:
```

(continues on next page)

(continued from previous page)

```
        ESP_LOGI(TAG, "Ethernet Stopped");
        break;
    default:
        break;
    }
}

esp_event_loop_create_default(); // create a default event loop that running in␣
↪background
esp_event_handler_register(ETH_EVENT, ESP_EVENT_ANY_ID, &eth_event_handler, NULL);␣
↪// register Ethernet event handler (to deal with user specific stuffs when event␣
↪like link up/down happened)
```

Start Ethernet Driver After driver installation, we can start Ethernet immediately.

```
esp_eth_start(eth_handle); // start Ethernet driver state machine
```

Connect Driver to TCP/IP Stack Up until now, we have installed the Ethernet driver. From the view of OSI (Open System Interconnection), we're still on level 2 (i.e. Data Link Layer). We can detect link up and down event, we can gain MAC address in user space, but we can't obtain IP address, let alone send HTTP request. The TCP/IP stack used in ESP-IDF is called LwIP, for more information about it, please refer to *LwIP*.

To connect Ethernet driver to TCP/IP stack, these three steps need to follow:

1. Create network interface for Ethernet driver
2. Attach the network interface to Ethernet driver
3. Register IP event handlers

More information about network interface, please refer to *Network Interface*.

```
/** Event handler for IP_EVENT_ETH_GOT_IP */
static void got_ip_event_handler(void *arg, esp_event_base_t event_base,
                                 int32_t event_id, void *event_data)
{
    ip_event_got_ip_t *event = (ip_event_got_ip_t *) event_data;
    const esp_netif_ip_info_t *ip_info = &event->ip_info;

    ESP_LOGI(TAG, "Ethernet Got IP Address");
    ESP_LOGI(TAG, "~~~~~~~~~~~");
    ESP_LOGI(TAG, "ETHIP:" IPSTR, IP2STR(&ip_info->ip));
    ESP_LOGI(TAG, "ETHMASK:" IPSTR, IP2STR(&ip_info->netmask));
    ESP_LOGI(TAG, "ETHGW:" IPSTR, IP2STR(&ip_info->gw));
    ESP_LOGI(TAG, "~~~~~~~~~~~");
}

esp_netif_init()); // Initialize TCP/IP network interface (should be called only␣
↪once in application)
esp_netif_config_t cfg = ESP_NETIF_DEFAULT_ETH(); // apply default network␣
↪interface configuration for Ethernet
esp_netif_t *eth_netif = esp_netif_new(&cfg); // create network interface for␣
↪Ethernet driver

esp_netif_attach(eth_netif, esp_eth_new_netif_glue(eth_handle)); // attach␣
↪Ethernet driver to TCP/IP stack
esp_event_handler_register(IP_EVENT, IP_EVENT_ETH_GOT_IP, &got_ip_event_handler,␣
↪NULL); // register user defined IP event handlers
esp_eth_start(eth_handle); // start Ethernet driver state machine
```

Warning: It is recommended to fully initialize the Ethernet driver and network interface prior registering user's Ethernet/IP event handlers, i.e. register the event handlers as the last thing prior starting the Ethernet driver. Such approach ensures that Ethernet/IP events get executed first by the Ethernet driver or network interface and so the system is in expected state when executing user's handlers.

Misc control of Ethernet driver The following functions should only be invoked after the Ethernet driver has been installed.

- Stop Ethernet driver: *esp_eth_stop()*
- Update Ethernet data input path: *esp_eth_update_input_path()*
- Misc get/set of Ethernet driver attributes: *esp_eth_ioctl()*

```
/* get MAC address */
uint8_t mac_addr[6];
memset(mac_addr, 0, sizeof(mac_addr));
esp_eth_ioctl(eth_handle, ETH_CMD_G_MAC_ADDR, mac_addr);
ESP_LOGI(TAG, "Ethernet MAC Address: %02x:%02x:%02x:%02x:%02x:%02x",
         mac_addr[0], mac_addr[1], mac_addr[2], mac_addr[3], mac_addr[4], mac_
↪addr[5]);

/* get PHY address */
int phy_addr = -1;
esp_eth_ioctl(eth_handle, ETH_CMD_G_PHY_ADDR, &phy_addr);
ESP_LOGI(TAG, "Ethernet PHY Address: %d", phy_addr);
```

Flow control Ethernet on MCU usually has a limitation in the number of frames it can handle during network congestion, because of the limitation in RAM size. A sending station might be transmitting data faster than the peer end can accept it. Ethernet flow control mechanism allows the receiving node to signal the sender requesting suspension of transmissions until the receiver catches up. The magic behind that is the pause frame, which was defined in IEEE 802.3x.

Pause frame is a special Ethernet frame used to carry the pause command, whose EtherType field is 0x8808, with the Control opcode set to 0x0001. Only stations configured for full-duplex operation may send pause frames. When a station wishes to pause the other end of a link, it sends a pause frame to the 48-bit reserved multicast address of 01-80-C2-00-00-01. The pause frame also includes the period of pause time being requested, in the form of a two-byte integer, ranging from 0 to 65535.

After Ethernet driver installation, the flow control feature is disabled by default. You can enable it by invoking *esp_eth_ioctl(eth_handle, ETH_CMD_S_FLOW_CTRL, true);*. One thing should be kept in mind, is that the pause frame ability will be advertised to peer end by PHY during auto negotiation. Ethernet driver sends pause frame only when both sides of the link support it.

Application Example

- Ethernet basic example: ethernet/basic.
- Ethernet iperf example: ethernet/iperf.
- Ethernet to Wi-Fi AP "router": ethernet/eth2ap.
- Most of protocol examples should also work for Ethernet: protocols.

API Reference

Header File

- components/esp_eth/include/esp_eth.h

Functions

esp_err_t **esp_eth_driver_install** (const *esp_eth_config_t* *config, *esp_eth_handle_t* *out_hdl)

Install Ethernet driver.

Parameters
- **config** –**[in]** configuration of the Ethernet driver
- **out_hdl** –**[out]** handle of Ethernet driver

Returns
- ESP_OK: install esp_eth driver successfully
- ESP_ERR_INVALID_ARG: install esp_eth driver failed because of some invalid argument
- ESP_ERR_NO_MEM: install esp_eth driver failed because there's no memory for driver
- ESP_FAIL: install esp_eth driver failed because some other error occurred

esp_err_t **esp_eth_driver_uninstall** (*esp_eth_handle_t* hdl)

Uninstall Ethernet driver.

Note: It's not recommended to uninstall Ethernet driver unless it won't get used any more in application code. To uninstall Ethernet driver, you have to make sure, all references to the driver are released. Ethernet driver can only be uninstalled successfully when reference counter equals to one.

Parameters **hdl** –**[in]** handle of Ethernet driver

Returns
- ESP_OK: uninstall esp_eth driver successfully
- ESP_ERR_INVALID_ARG: uninstall esp_eth driver failed because of some invalid argument
- ESP_ERR_INVALID_STATE: uninstall esp_eth driver failed because it has more than one reference
- ESP_FAIL: uninstall esp_eth driver failed because some other error occurred

esp_err_t **esp_eth_start** (*esp_eth_handle_t* hdl)

Start Ethernet driver **ONLY** in standalone mode (i.e. without TCP/IP stack)

Note: This API will start driver state machine and internal software timer (for checking link status).

Parameters **hdl** –**[in]** handle of Ethernet driver

Returns
- ESP_OK: start esp_eth driver successfully
- ESP_ERR_INVALID_ARG: start esp_eth driver failed because of some invalid argument
- ESP_ERR_INVALID_STATE: start esp_eth driver failed because driver has started already
- ESP_FAIL: start esp_eth driver failed because some other error occurred

esp_err_t **esp_eth_stop** (*esp_eth_handle_t* hdl)

Stop Ethernet driver.

Note: This function does the oppsite operation of `esp_eth_start`.

Parameters **hdl** –**[in]** handle of Ethernet driver

Returns
- ESP_OK: stop esp_eth driver successfully
- ESP_ERR_INVALID_ARG: stop esp_eth driver failed because of some invalid argument
- ESP_ERR_INVALID_STATE: stop esp_eth driver failed because driver has not started yet

- ESP_FAIL: stop esp_eth driver failed because some other error occurred

esp_err_t **esp_eth_update_input_path** (*esp_eth_handle_t* hdl, *esp_err_t* (*stack_input)(*esp_eth_handle_t* hdl, uint8_t *buffer, uint32_t length, void *priv), void *priv)

Update Ethernet data input path (i.e. specify where to pass the input buffer)

Note: After install driver, Ethernet still don't know where to deliver the input buffer. In fact, this API registers a callback function which get invoked when Ethernet received new packets.

Parameters

- **hdl** –**[in]** handle of Ethernet driver
- **stack_input** –**[in]** function pointer, which does the actual process on incoming packets
- **priv** –**[in]** private resource, which gets passed to `stack_input` callback without any modification

Returns

- ESP_OK: update input path successfully
- ESP_ERR_INVALID_ARG: update input path failed because of some invalid argument
- ESP_FAIL: update input path failed because some other error occurred

esp_err_t **esp_eth_transmit** (*esp_eth_handle_t* hdl, void *buf, size_t length)

General Transmit.

Parameters

- **hdl** –**[in]** handle of Ethernet driver
- **buf** –**[in]** buffer of the packet to transfer
- **length** –**[in]** length of the buffer to transfer

Returns

- ESP_OK: transmit frame buffer successfully
- ESP_ERR_INVALID_ARG: transmit frame buffer failed because of some invalid argument
- ESP_FAIL: transmit frame buffer failed because some other error occurred

esp_err_t **esp_eth_receive** (*esp_eth_handle_t* hdl, uint8_t *buf, uint32_t *length)

General Receive is deprecated and shall not be accessed from app code, as polling is not supported by Ethernet.

Note: Before this function got invoked, the value of "length" should set by user, equals the size of buffer. After the function returned, the value of "length" means the real length of received data.

Note: This API was exposed by accident, users should not use this API in their applications. Ethernet driver is interrupt driven, and doesn't support polling mode. Instead, users should register input callback with `esp_eth_update_input_path`.

Parameters

- **hdl** –**[in]** handle of Ethernet driver
- **buf** –**[out]** buffer to preserve the received packet
- **length** –**[out]** length of the received packet

Returns

- ESP_OK: receive frame buffer successfully
- ESP_ERR_INVALID_ARG: receive frame buffer failed because of some invalid argument
- ESP_ERR_INVALID_SIZE: input buffer size is not enough to hold the incoming data. in this case, value of returned "length" indicates the real size of incoming data.
- ESP_FAIL: receive frame buffer failed because some other error occurred

esp_err_t **esp_eth_ioctl**(*esp_eth_handle_t* hdl, *esp_eth_io_cmd_t* cmd, void *data)

Misc IO function of Etherent driver.

The following IO control commands are supported:

- `ETH_CMD_S_MAC_ADDR` sets Ethernet interface MAC address. `data` argument is pointer to MAC address buffer with expected size of 6 bytes.
- `ETH_CMD_G_MAC_ADDR` gets Ethernet interface MAC address. `data` argument is pointer to a buffer to which MAC address is to be copied. The buffer size must be at least 6 bytes.
- `ETH_CMD_S_PHY_ADDR` sets PHY address in range of <0-31>. `data` argument is pointer to memory of uint32_t datatype from where the configuration option is read.
- `ETH_CMD_G_PHY_ADDR` gets PHY address. `data` argument is pointer to memory of uint32_t datatype to which the PHY address is to be stored.
- `ETH_CMD_G_SPEED` gets current Ethernet link speed. `data` argument is pointer to memory of eth_speed_t datatype to which the speed is to be stored.
- `ETH_CMD_S_PROMISCUOUS` sets/resets Ethernet interface promiscuous mode. `data` argument is pointer to memory of bool datatype from which the configuration option is read.
- `ETH_CMD_S_FLOW_CTRL` sets/resets Ethernet interface flow control. `data` argument is pointer to memory of bool datatype from which the configuration option is read.
- `ETH_CMD_G_DUPLEX_MODE` gets current Ethernet link duplex mode. `data` argument is pointer to memory of eth_duplex_t datatype to which the duplex mode is to be stored.
- `ETH_CMD_S_PHY_LOOPBACK` sets/resets PHY to/from loopback mode. `data` argument is pointer to memory of bool datatype from which the configuration option is read.

Parameters

- **hdl** –**[in]** handle of Ethernet driver
- **cmd** –**[in]** IO control command
- **data** –**[inout]** address of data for `set` command or address where to store the data when used with `get` command

Returns

- ESP_OK: process io command successfully
- ESP_ERR_INVALID_ARG: process io command failed because of some invalid argument
- ESP_FAIL: process io command failed because some other error occurred

esp_err_t **esp_eth_increase_reference**(*esp_eth_handle_t* hdl)

Increase Ethernet driver reference.

Note: Ethernet driver handle can be obtained by os timer, netif, etc. It's dangerous when thread A is using Ethernet but thread B uninstall the driver. Using reference counter can prevent such risk, but care should be taken, when you obtain Ethernet driver, this API must be invoked so that the driver won't be uninstalled during your using time.

Parameters **hdl** –**[in]** handle of Ethernet driver

Returns

- ESP_OK: increase reference successfully
- ESP_ERR_INVALID_ARG: increase reference failed because of some invalid argument

esp_err_t **esp_eth_decrease_reference**(*esp_eth_handle_t* hdl)

Decrease Ethernet driver reference.

Parameters **hdl** –**[in]** handle of Ethernet driver

Returns

- ESP_OK: increase reference successfully
- ESP_ERR_INVALID_ARG: increase reference failed because of some invalid argument

Structures

struct **esp_eth_config_t**

Configuration of Ethernet driver.

Public Members

esp_eth_mac_t ***mac**

Ethernet MAC object.

esp_eth_phy_t ***phy**

Ethernet PHY object.

uint32_t **check_link_period_ms**

Period time of checking Ethernet link status.

esp_err_t (***stack_input**)(*esp_eth_handle_t* eth_handle, uint8_t *buffer, uint32_t length, void *priv)

Input frame buffer to user's stack.

Param eth_handle [in] handle of Ethernet driver
Param buffer [in] frame buffer that will get input to upper stack
Param length [in] length of the frame buffer
Return

- ESP_OK: input frame buffer to upper stack successfully
- ESP_FAIL: error occurred when inputting buffer to upper stack

esp_err_t (***on_lowlevel_init_done**)(*esp_eth_handle_t* eth_handle)

Callback function invoked when lowlevel initialization is finished.

Param eth_handle [in] handle of Ethernet driver
Return

- ESP_OK: process extra lowlevel initialization successfully
- ESP_FAIL: error occurred when processing extra lowlevel initialization

esp_err_t (***on_lowlevel_deinit_done**)(*esp_eth_handle_t* eth_handle)

Callback function invoked when lowlevel deinitialization is finished.

Param eth_handle [in] handle of Ethernet driver
Return

- ESP_OK: process extra lowlevel deinitialization successfully
- ESP_FAIL: error occurred when processing extra lowlevel deinitialization

esp_err_t (***read_phy_reg**)(*esp_eth_handle_t* eth_handle, uint32_t phy_addr, uint32_t phy_reg, uint32_t *reg_value)

Read PHY register.

Note: Usually the PHY register read/write function is provided by MAC (SMI interface), but if the PHY device is managed by other interface (e.g. I2C), then user needs to implement the corresponding read/write. Setting this to NULL means your PHY device is managed by MAC's SMI interface.

Param eth_handle [in] handle of Ethernet driver
Param phy_addr [in] PHY chip address (0~31)
Param phy_reg [in] PHY register index code

Param reg_value **[out]** PHY register value
Return
- ESP_OK: read PHY register successfully
- ESP_ERR_INVALID_ARG: read PHY register failed because of invalid argument
- ESP_ERR_TIMEOUT: read PHY register failed because of timeout
- ESP_FAIL: read PHY register failed because some other error occurred

esp_err_t (*`write_phy_reg`)(*esp_eth_handle_t* eth_handle, uint32_t phy_addr, uint32_t phy_reg, uint32_t reg_value)

Write PHY register.

Note: Usually the PHY register read/write function is provided by MAC (SMI interface), but if the PHY device is managed by other interface (e.g. I2C), then user needs to implement the corresponding read/write. Setting this to NULL means your PHY device is managed by MAC's SMI interface.

Param eth_handle **[in]** handle of Ethernet driver
Param phy_addr **[in]** PHY chip address (0~31)
Param phy_reg **[in]** PHY register index code
Param reg_value **[in]** PHY register value
Return
- ESP_OK: write PHY register successfully
- ESP_ERR_INVALID_ARG: read PHY register failed because of invalid argument
- ESP_ERR_TIMEOUT: write PHY register failed because of timeout
- ESP_FAIL: write PHY register failed because some other error occurred

Macros

`ETH_DEFAULT_CONFIG`(emac, ephy)

Default configuration for Ethernet driver.

Type Definitions

typedef void *`esp_eth_handle_t`

Handle of Ethernet driver.

Header File

- components/esp_eth/include/esp_eth_com.h

Functions

esp_err_t `esp_eth_detect_phy_addr`(*esp_eth_mediator_t* *eth, int *detected_addr)

Detect PHY address.

Parameters
- `eth` –**[in]** mediator of Ethernet driver
- `detected_addr` –**[out]** a valid address after detection

Returns
- ESP_OK: detect phy address successfully
- ESP_ERR_INVALID_ARG: invalid parameter
- ESP_ERR_NOT_FOUND: can't detect any PHY device
- ESP_FAIL: detect phy address failed because some error occurred

Structures

struct **esp_eth_mediator_s**

Ethernet mediator.

Public Members

esp_err_t (***phy_reg_read**)(*esp_eth_mediator_t* *eth, uint32_t phy_addr, uint32_t phy_reg, uint32_t *reg_value)

Read PHY register.

Param eth **[in]** mediator of Ethernet driver
Param phy_addr **[in]** PHY Chip address (0~31)
Param phy_reg **[in]** PHY register index code
Param reg_value **[out]** PHY register value
Return
- ESP_OK: read PHY register successfully
- ESP_FAIL: read PHY register failed because some error occurred

esp_err_t (***phy_reg_write**)(*esp_eth_mediator_t* *eth, uint32_t phy_addr, uint32_t phy_reg, uint32_t reg_value)

Write PHY register.

Param eth **[in]** mediator of Ethernet driver
Param phy_addr **[in]** PHY Chip address (0~31)
Param phy_reg **[in]** PHY register index code
Param reg_value **[in]** PHY register value
Return
- ESP_OK: write PHY register successfully
- ESP_FAIL: write PHY register failed because some error occurred

esp_err_t (***stack_input**)(*esp_eth_mediator_t* *eth, uint8_t *buffer, uint32_t length)

Deliver packet to upper stack.

Param eth **[in]** mediator of Ethernet driver
Param buffer **[in]** packet buffer
Param length **[in]** length of the packet
Return
- ESP_OK: deliver packet to upper stack successfully
- ESP_FAIL: deliver packet failed because some error occurred

esp_err_t (***on_state_changed**)(*esp_eth_mediator_t* *eth, *esp_eth_state_t* state, void *args)

Callback on Ethernet state changed.

Param eth **[in]** mediator of Ethernet driver
Param state **[in]** new state
Param args **[in]** optional argument for the new state
Return
- ESP_OK: process the new state successfully
- ESP_FAIL: process the new state failed because some error occurred

Macros

ETH_MAX_PAYLOAD_LEN

Maximum Ethernet payload size.

ETH_MIN_PAYLOAD_LEN

Minimum Ethernet payload size.

ETH_HEADER_LEN

Ethernet frame header size: Dest addr(6 Bytes) + Src addr(6 Bytes) + length/type(2 Bytes)

ETH_VLAN_TAG_LEN

Optional 802.1q VLAN Tag length.

ETH_JUMBO_FRAME_PAYLOAD_LEN

Jumbo frame payload size.

ETH_MAX_PACKET_SIZE

Maximum frame size (1522 Bytes)

ETH_MIN_PACKET_SIZE

Minimum frame size (64 Bytes)

Type Definitions

typedef struct *esp_eth_mediator_s* **esp_eth_mediator_t**

Ethernet mediator.

Enumerations

enum **esp_eth_state_t**

Ethernet driver state.

Values:

enumerator **ETH_STATE_LLINIT**

Lowlevel init done

enumerator **ETH_STATE_DEINIT**

Deinit done

enumerator **ETH_STATE_LINK**

Link status changed

enumerator **ETH_STATE_SPEED**

Speed updated

enumerator **ETH_STATE_DUPLEX**

Duplex updated

enumerator **ETH_STATE_PAUSE**

Pause ability updated

enum **esp_eth_io_cmd_t**

Command list for ioctl API.

Values:

enumerator **ETH_CMD_G_MAC_ADDR**

Get MAC address

enumerator **ETH_CMD_S_MAC_ADDR**

Set MAC address

enumerator **ETH_CMD_G_PHY_ADDR**

Get PHY address

enumerator **ETH_CMD_S_PHY_ADDR**

Set PHY address

enumerator **ETH_CMD_G_SPEED**

Get Speed

enumerator **ETH_CMD_S_PROMISCUOUS**

Set promiscuous mode

enumerator **ETH_CMD_S_FLOW_CTRL**

Set flow control

enumerator **ETH_CMD_G_DUPLEX_MODE**

Get Duplex mode

enumerator **ETH_CMD_S_PHY_LOOPBACK**

Set PHY loopback

enum **eth_event_t**

Ethernet event declarations.

Values:

enumerator **ETHERNET_EVENT_START**

Ethernet driver start

enumerator **ETHERNET_EVENT_STOP**

Ethernet driver stop

enumerator **ETHERNET_EVENT_CONNECTED**

Ethernet got a valid link

enumerator **ETHERNET_EVENT_DISCONNECTED**

Ethernet lost a valid link

Header File

- components/esp_eth/include/esp_eth_mac.h

Functions

esp_eth_mac_t ***esp_eth_mac_new_esp32** (const *eth_mac_config_t* *config)

Create ESP32 Ethernet MAC instance.

Parameters **config** –Ethernet MAC configuration

Returns

- instance: create MAC instance successfully
- NULL: create MAC instance failed because some error occurred

Unions

union **eth_mac_clock_config_t**

#include <esp_eth_mac.h> Ethernet MAC Clock Configuration.

Public Members

struct *eth_mac_clock_config_t*::[anonymous] **mii**

EMAC MII Clock Configuration

emac_rmii_clock_mode_t **clock_mode**

RMII Clock Mode Configuration

emac_rmii_clock_gpio_t **clock_gpio**

RMII Clock GPIO Configuration

struct *eth_mac_clock_config_t*::[anonymous] **rmii**

EMAC RMII Clock Configuration

Structures

struct **esp_eth_mac_s**

Ethernet MAC.

Public Members

esp_err_t (***set_mediator**)(*esp_eth_mac_t* *mac, *esp_eth_mediator_t* *eth)

Set mediator for Ethernet MAC.

Param mac **[in]** Ethernet MAC instance

Param eth **[in]** Ethernet mediator

Return

- ESP_OK: set mediator for Ethernet MAC successfully
- ESP_ERR_INVALID_ARG: set mediator for Ethernet MAC failed because of invalid argument

esp_err_t (*`init`)(*esp_eth_mac_t* *mac)

Initialize Ethernet MAC.

Param mac **[in]** Ethernet MAC instance
Return
- ESP_OK: initialize Ethernet MAC successfully
- ESP_ERR_TIMEOUT: initialize Ethernet MAC failed because of timeout
- ESP_FAIL: initialize Ethernet MAC failed because some other error occurred

esp_err_t (*`deinit`)(*esp_eth_mac_t* *mac)

Deinitialize Ethernet MAC.

Param mac **[in]** Ethernet MAC instance
Return
- ESP_OK: deinitialize Ethernet MAC successfully
- ESP_FAIL: deinitialize Ethernet MAC failed because some error occurred

esp_err_t (*`start`)(*esp_eth_mac_t* *mac)

Start Ethernet MAC.

Param mac **[in]** Ethernet MAC instance
Return
- ESP_OK: start Ethernet MAC successfully
- ESP_FAIL: start Ethernet MAC failed because some other error occurred

esp_err_t (*`stop`)(*esp_eth_mac_t* *mac)

Stop Ethernet MAC.

Param mac **[in]** Ethernet MAC instance
Return
- ESP_OK: stop Ethernet MAC successfully
- ESP_FAIL: stop Ethernet MAC failed because some error occurred

esp_err_t (*`transmit`)(*esp_eth_mac_t* *mac, uint8_t *buf, uint32_t length)

Transmit packet from Ethernet MAC.

Param mac **[in]** Ethernet MAC instance
Param buf **[in]** packet buffer to transmit
Param length **[in]** length of packet
Return
- ESP_OK: transmit packet successfully
- ESP_ERR_INVALID_ARG: transmit packet failed because of invalid argument
- ESP_ERR_INVALID_STATE: transmit packet failed because of wrong state of MAC
- ESP_FAIL: transmit packet failed because some other error occurred

esp_err_t (*`receive`)(*esp_eth_mac_t* *mac, uint8_t *buf, uint32_t *length)

Receive packet from Ethernet MAC.

Note: Memory of buf is allocated in the Layer2, make sure it get free after process.

Note: Before this function got invoked, the value of "length" should set by user, equals the size of buffer. After the function returned, the value of "length" means the real length of received data.

Param mac **[in]** Ethernet MAC instance

Param buf **[out]** packet buffer which will preserve the received frame
Param length **[out]** length of the received packet
Return
- ESP_OK: receive packet successfully
- ESP_ERR_INVALID_ARG: receive packet failed because of invalid argument
- ESP_ERR_INVALID_SIZE: input buffer size is not enough to hold the incoming data. in this case, value of returned "length" indicates the real size of incoming data.
- ESP_FAIL: receive packet failed because some other error occurred

esp_err_t (*`read_phy_reg`)(*esp_eth_mac_t* *mac, uint32_t phy_addr, uint32_t phy_reg, uint32_t *reg_value)

Read PHY register.

Param mac **[in]** Ethernet MAC instance
Param phy_addr **[in]** PHY chip address (0~31)
Param phy_reg **[in]** PHY register index code
Param reg_value **[out]** PHY register value
Return
- ESP_OK: read PHY register successfully
- ESP_ERR_INVALID_ARG: read PHY register failed because of invalid argument
- ESP_ERR_INVALID_STATE: read PHY register failed because of wrong state of MAC
- ESP_ERR_TIMEOUT: read PHY register failed because of timeout
- ESP_FAIL: read PHY register failed because some other error occurred

esp_err_t (*`write_phy_reg`)(*esp_eth_mac_t* *mac, uint32_t phy_addr, uint32_t phy_reg, uint32_t reg_value)

Write PHY register.

Param mac **[in]** Ethernet MAC instance
Param phy_addr **[in]** PHY chip address (0~31)
Param phy_reg **[in]** PHY register index code
Param reg_value **[in]** PHY register value
Return
- ESP_OK: write PHY register successfully
- ESP_ERR_INVALID_STATE: write PHY register failed because of wrong state of MAC
- ESP_ERR_TIMEOUT: write PHY register failed because of timeout
- ESP_FAIL: write PHY register failed because some other error occurred

esp_err_t (*`set_addr`)(*esp_eth_mac_t* *mac, uint8_t *addr)

Set MAC address.

Param mac **[in]** Ethernet MAC instance
Param addr **[in]** MAC address
Return
- ESP_OK: set MAC address successfully
- ESP_ERR_INVALID_ARG: set MAC address failed because of invalid argument
- ESP_FAIL: set MAC address failed because some other error occurred

esp_err_t (*`get_addr`)(*esp_eth_mac_t* *mac, uint8_t *addr)

Get MAC address.

Param mac **[in]** Ethernet MAC instance
Param addr **[out]** MAC address
Return
- ESP_OK: get MAC address successfully
- ESP_ERR_INVALID_ARG: get MAC address failed because of invalid argument

- ESP_FAIL: get MAC address failed because some other error occurred

esp_err_t (*`set_speed`)(*esp_eth_mac_t* *mac, eth_speed_t speed)

Set speed of MAC.

Param ma:c [in] Ethernet MAC instance
Param speed [in] MAC speed
Return
- ESP_OK: set MAC speed successfully
- ESP_ERR_INVALID_ARG: set MAC speed failed because of invalid argument
- ESP_FAIL: set MAC speed failed because some other error occurred

esp_err_t (*`set_duplex`)(*esp_eth_mac_t* *mac, eth_duplex_t duplex)

Set duplex mode of MAC.

Param mac [in] Ethernet MAC instance
Param duplex [in] MAC duplex
Return
- ESP_OK: set MAC duplex mode successfully
- ESP_ERR_INVALID_ARG: set MAC duplex failed because of invalid argument
- ESP_FAIL: set MAC duplex failed because some other error occurred

esp_err_t (*`set_link`)(*esp_eth_mac_t* *mac, eth_link_t link)

Set link status of MAC.

Param mac [in] Ethernet MAC instance
Param link [in] Link status
Return
- ESP_OK: set link status successfully
- ESP_ERR_INVALID_ARG: set link status failed because of invalid argument
- ESP_FAIL: set link status failed because some other error occurred

esp_err_t (*`set_promiscuous`)(*esp_eth_mac_t* *mac, bool enable)

Set promiscuous of MAC.

Param mac [in] Ethernet MAC instance
Param enable [in] set true to enable promiscuous mode; set false to disable promiscuous mode
Return
- ESP_OK: set promiscuous mode successfully
- ESP_FAIL: set promiscuous mode failed because some error occurred

esp_err_t (*`enable_flow_ctrl`)(*esp_eth_mac_t* *mac, bool enable)

Enable flow control on MAC layer or not.

Param mac [in] Ethernet MAC instance
Param enable [in] set true to enable flow control; set false to disable flow control
Return
- ESP_OK: set flow control successfully
- ESP_FAIL: set flow control failed because some error occurred

esp_err_t (*`set_peer_pause_ability`)(*esp_eth_mac_t* *mac, uint32_t ability)

Set the PAUSE ability of peer node.

Param mac [in] Ethernet MAC instance
Param ability [in] zero indicates that pause function is supported by link partner; non-zero indicates that pause function is not supported by link partner
Return
- ESP_OK: set peer pause ability successfully

- ESP_FAIL: set peer pause ability failed because some error occurred

esp_err_t (*`del`)(*esp_eth_mac_t* *mac)

Free memory of Ethernet MAC.

Param mac **[in]** Ethernet MAC instance

Return

- ESP_OK: free Ethernet MAC instance successfully
- ESP_FAIL: free Ethernet MAC instance failed because some error occurred

struct **`eth_mac_config_t`**

Configuration of Ethernet MAC object.

Public Members

uint32_t **`sw_reset_timeout_ms`**

Software reset timeout value (Unit: ms)

uint32_t **`rx_task_stack_size`**

Stack size of the receive task

uint32_t **`rx_task_prio`**

Priority of the receive task

int **`smi_mdc_gpio_num`**

SMI MDC GPIO number, set to -1 could bypass the SMI GPIO configuration

int **`smi_mdio_gpio_num`**

SMI MDIO GPIO number, set to -1 could bypass the SMI GPIO configuration

uint32_t **`flags`**

Flags that specify extra capability for mac driver

eth_data_interface_t **`interface`**

EMAC Data interface to PHY (MII/RMII)

eth_mac_clock_config_t **`clock_config`**

EMAC Interface clock configuration

Macros

`ETH_MAC_FLAG_WORK_WITH_CACHE_DISABLE`

MAC driver can work when cache is disabled

`ETH_MAC_FLAG_PIN_TO_CORE`

Pin MAC task to the CPU core where driver installation happened

`ETH_MAC_DEFAULT_CONFIG`()

Default configuration for Ethernet MAC object.

Type Definitions

typedef struct *esp_eth_mac_s* **esp_eth_mac_t**

Ethernet MAC.

Enumerations

enum **emac_rmii_clock_mode_t**

RMII Clock Mode Options.

Values:

enumerator **EMAC_CLK_DEFAULT**

Default values configured using Kconfig are going to be used when "Default" selected.

enumerator **EMAC_CLK_EXT_IN**

Input RMII Clock from external. EMAC Clock GPIO number needs to be configured when this option is selected.

Note: MAC will get RMII clock from outside. Note that ESP32 only supports GPIO0 to input the RMII clock.

---

enumerator **EMAC_CLK_OUT**

Output RMII Clock from internal APLL Clock. EMAC Clock GPIO number needs to be configured when this option is selected.

enum **emac_rmii_clock_gpio_t**

RMII Clock GPIO number Options.

Values:

enumerator **EMAC_CLK_IN_GPIO**

MAC will get RMII clock from outside at this GPIO.

Note: ESP32 only supports GPIO0 to input the RMII clock.

---

enumerator **EMAC_APPL_CLK_OUT_GPIO**

Output RMII Clock from internal APLL Clock available at GPIO0.

Note: GPIO0 can be set to output a pre-divided PLL clock (test only!). Enabling this option will configure GPIO0 to output a 50MHz clock. In fact this clock doesn't have directly relationship with EMAC peripheral. Sometimes this clock won't work well with your PHY chip. You might need to add some extra devices after GPIO0 (e.g. inverter). Note that outputting RMII clock on GPIO0 is an experimental practice. If you want the Ethernet to work with WiFi, don't select GPIO0 output mode for stability.

---

enumerator **EMAC_CLK_OUT_GPIO**

Output RMII Clock from internal APLL Clock available at GPIO16.

enumerator **EMAC_CLK_OUT_180_GPIO**

Inverted Output RMII Clock from internal APLL Clock available at GPIO17.

Header File

- components/esp_eth/include/esp_eth_phy.h

Functions

esp_eth_phy_t ***esp_eth_phy_new_ip101** (const *eth_phy_config_t* *config)

Create a PHY instance of IP101.

Parameters `config` –**[in]** configuration of PHY
Returns
- instance: create PHY instance successfully
- NULL: create PHY instance failed because some error occurred

esp_eth_phy_t ***esp_eth_phy_new_rtl8201** (const *eth_phy_config_t* *config)

Create a PHY instance of RTL8201.

Parameters `config` –**[in]** configuration of PHY
Returns
- instance: create PHY instance successfully
- NULL: create PHY instance failed because some error occurred

esp_eth_phy_t ***esp_eth_phy_new_lan87xx** (const *eth_phy_config_t* *config)

Create a PHY instance of LAN87xx.

Parameters `config` –**[in]** configuration of PHY
Returns
- instance: create PHY instance successfully
- NULL: create PHY instance failed because some error occurred

static inline *esp_eth_phy_t* ***esp_eth_phy_new_lan8720** (const *eth_phy_config_t* *config)

Create a PHY instance of LAN8720.

Note: For ESP-IDF backwards compatibility reasons. In all other cases, use esp_eth_phy_new_lan87xx instead.

Parameters `config` –**[in]** configuration of PHY
Returns
- instance: create PHY instance successfully
- NULL: create PHY instance failed because some error occurred

esp_eth_phy_t ***esp_eth_phy_new_dp83848** (const *eth_phy_config_t* *config)

Create a PHY instance of DP83848.

Parameters `config` –**[in]** configuration of PHY
Returns
- instance: create PHY instance successfully
- NULL: create PHY instance failed because some error occurred

esp_eth_phy_t ***esp_eth_phy_new_ksz8041** (const *eth_phy_config_t* *config)

Create a PHY instance of KSZ8041.

Parameters `config` –**[in]** configuration of PHY
Returns
- instance: create PHY instance successfully
- NULL: create PHY instance failed because some error occurred

esp_eth_phy_t ***esp_eth_phy_new_ksz8081** (const *eth_phy_config_t* *config)

Create a PHY instance of KSZ8081.

Parameters `config` –**[in]** configuration of PHY
Returns

- instance: create PHY instance successfully
- NULL: create PHY instance failed because some error occurred

Structures

struct **esp_eth_phy_s**

Ethernet PHY.

Public Members

esp_err_t (*__set_mediator__)(*esp_eth_phy_t* *phy, *esp_eth_mediator_t* *mediator)

Set mediator for PHY.

Param phy **[in]** Ethernet PHY instance
Param mediator **[in]** mediator of Ethernet driver
Return
- ESP_OK: set mediator for Ethernet PHY instance successfully
- ESP_ERR_INVALID_ARG: set mediator for Ethernet PHY instance failed because of some invalid arguments

esp_err_t (*__reset__)(*esp_eth_phy_t* *phy)

Software Reset Ethernet PHY.

Param phy **[in]** Ethernet PHY instance
Return
- ESP_OK: reset Ethernet PHY successfully
- ESP_FAIL: reset Ethernet PHY failed because some error occurred

esp_err_t (*__reset_hw__)(*esp_eth_phy_t* *phy)

Hardware Reset Ethernet PHY.

Note: Hardware reset is mostly done by pull down and up PHY’ s nRST pin

---

Param phy **[in]** Ethernet PHY instance
Return
- ESP_OK: reset Ethernet PHY successfully
- ESP_FAIL: reset Ethernet PHY failed because some error occurred

esp_err_t (*__init__)(*esp_eth_phy_t* *phy)

Initialize Ethernet PHY.

Param phy **[in]** Ethernet PHY instance
Return
- ESP_OK: initialize Ethernet PHY successfully
- ESP_FAIL: initialize Ethernet PHY failed because some error occurred

esp_err_t (*__deinit__)(*esp_eth_phy_t* *phy)

Deinitialize Ethernet PHY.

Param phyL **[in]** Ethernet PHY instance
Return
- ESP_OK: deinitialize Ethernet PHY successfully
- ESP_FAIL: deinitialize Ethernet PHY failed because some error occurred

esp_err_t (*`negotiate`)(*esp_eth_phy_t* *phy)

Start auto negotiation.

Param phy **[in]** Ethernet PHY instance
Return
- ESP_OK: restart auto negotiation successfully
- ESP_FAIL: restart auto negotiation failed because some error occurred

esp_err_t (*`get_link`)(*esp_eth_phy_t* *phy)

Get Ethernet PHY link status.

Param phy **[in]** Ethernet PHY instance
Return
- ESP_OK: get Ethernet PHY link status successfully
- ESP_FAIL: get Ethernet PHY link status failed because some error occurred

esp_err_t (*`pwrctl`)(*esp_eth_phy_t* *phy, bool enable)

Power control of Ethernet PHY.

Param phy **[in]** Ethernet PHY instance
Param enable **[in]** set true to power on Ethernet PHY; ser false to power off Ethernet PHY
Return
- ESP_OK: control Ethernet PHY power successfully
- ESP_FAIL: control Ethernet PHY power failed because some error occurred

esp_err_t (*`set_addr`)(*esp_eth_phy_t* *phy, uint32_t addr)

Set PHY chip address.

Param phy **[in]** Ethernet PHY instance
Param addr **[in]** PHY chip address
Return
- ESP_OK: set Ethernet PHY address successfully
- ESP_FAIL: set Ethernet PHY address failed because some error occurred

esp_err_t (*`get_addr`)(*esp_eth_phy_t* *phy, uint32_t *addr)

Get PHY chip address.

Param phy **[in]** Ethernet PHY instance
Param addr **[out]** PHY chip address
Return
- ESP_OK: get Ethernet PHY address successfully
- ESP_ERR_INVALID_ARG: get Ethernet PHY address failed because of invalid argument

esp_err_t (*`advertise_pause_ability`)(*esp_eth_phy_t* *phy, uint32_t ability)

Advertise pause function supported by MAC layer.

Param phy **[in]** Ethernet PHY instance
Param addr **[out]** Pause ability
Return
- ESP_OK: Advertise pause ability successfully
- ESP_ERR_INVALID_ARG: Advertise pause ability failed because of invalid argument

esp_err_t (*`loopback`)(*esp_eth_phy_t* *phy, bool enable)

Param phy **[in]** Ethernet PHY instance
Param enable **[in]** enables or disables PHY loopback
Return

- ESP_OK: configures PHY instance loopback function successfully
- ESP_FAIL: PHY instance loopback configuration failed because some error occurred

esp_err_t (*__del__)(*esp_eth_phy_t* *phy)

Free memory of Ethernet PHY instance.

Param phy **[in]** Ethernet PHY instance
Return
- ESP_OK: free PHY instance successfully
- ESP_FAIL: free PHY instance failed because some error occurred

struct **eth_phy_config_t**

Ethernet PHY configuration.

Public Members

int32_t **phy_addr**

PHY address, set -1 to enable PHY address detection at initialization stage

uint32_t **reset_timeout_ms**

Reset timeout value (Unit: ms)

uint32_t **autonego_timeout_ms**

Auto-negotiation timeout value (Unit: ms)

int **reset_gpio_num**

Reset GPIO number, -1 means no hardware reset

Macros

ESP_ETH_PHY_ADDR_AUTO

ETH_PHY_DEFAULT_CONFIG()

Default configuration for Ethernet PHY object.

Type Definitions

typedef struct *esp_eth_phy_s* **esp_eth_phy_t**

Ethernet PHY.

Header File

- components/esp_eth/include/esp_eth_netif_glue.h

Functions

esp_eth_netif_glue_handle_t **esp_eth_new_netif_glue**(*esp_eth_handle_t* eth_hdl)

Create a netif glue for Ethernet driver.

Note: netif glue is used to attach io driver to TCP/IP netif

Parameters **eth_hdl** –Ethernet driver handle

Returns glue object, which inherits esp_netif_driver_base_t

esp_err_t **esp_eth_del_netif_glue**(*esp_eth_netif_glue_handle_t* eth_netif_glue)

Delete netif glue of Ethernet driver.

Parameters **eth_netif_glue** –netif glue
Returns -ESP_OK: delete netif glue successfully

esp_err_t **esp_eth_set_default_handlers**(void *esp_netif)

Register default IP layer handlers for Ethernet.

Note: : Ethernet handle might not yet properly initialized when setting up these default handlers

Warning: : This function is deprecated and is kept here only for compatibility reasons. Registration of default IP layer handlers for Ethernet is now handled automatically. Do not call this function if you want to use multiple Ethernet instances at a time.

Parameters **esp_netif** –**[in]** esp network interface handle created for Ethernet driver
Returns

- ESP_ERR_INVALID_ARG: invalid parameter (esp_netif is NULL)
- ESP_OK: set default IP layer handlers successfully
- others: other failure occurred during register esp_event handler

esp_err_t **esp_eth_clear_default_handlers**(void *esp_netif)

Unregister default IP layer handlers for Ethernet.

Warning: : This function is deprecated and is kept here only for compatibility reasons. Unregistration of default IP layer handlers for Ethernet is now handled automatically if not registered by calling esp_eth_set_default_handlers.

Parameters **esp_netif** –**[in]** esp network interface handle created for Ethernet driver
Returns

- ESP_ERR_INVALID_ARG: invalid parameter (esp_netif is NULL)
- ESP_OK: clear default IP layer handlers successfully
- others: other failure occurred during unregister esp_event handler

Type Definitions

typedef struct esp_eth_netif_glue_t ***esp_eth_netif_glue_handle_t**

Handle of netif glue - an intermediate layer between netif and Ethernet driver.

Code examples for the Ethernet API are provided in the ethernet directory of ESP-IDF examples.

2.2.3 Thread

Thread

Introduction Thread is a IP-based mesh networking protocol. It's based on the 802.15.4 physical and MAC layer.

Application Examples The openthread directory of ESP-IDF examples contains the following applications:

- The OpenThread interactive shell openthread/ot_cli.
- The Thread border router openthread/ot_br.
- The Thread radio co-processor openthread/ot_rcp.

API Reference For manipulating the Thread network, the OpenThread api shall be used. The OpenThread api docs can be found at the OpenThread official website.

ESP-IDF provides extra apis for launching and managing the OpenThread stack, binding to network interfaces and border routing features.

Header File

- components/openthread/include/esp_openthread.h

Functions

esp_err_t **esp_openthread_init**(const *esp_openthread_platform_config_t* *init_config)

Initializes the full OpenThread stack.

Note: The OpenThread instance will also be initialized in this function.

Parameters **init_config** –**[in]** The initialization configuration.

Returns

- ESP_OK on success
- ESP_ERR_NO_MEM if allocation has failed
- ESP_ERR_INVALID_ARG if radio or host connection mode not supported
- ESP_ERR_INVALID_STATE if already initialized

esp_err_t **esp_openthread_launch_mainloop**(void)

Launches the OpenThread main loop.

Note: Thie function will not return unless error happens when running the OpenThread stack.

Returns

- ESP_OK on success
- ESP_ERR_NO_MEM if allocation has failed
- ESP_FAIL on other failures

esp_err_t **esp_openthread_deinit**(void)

This function performs OpenThread stack and platform driver deinitialization.

Returns

- ESP_OK on success
- ESP_ERR_INVALID_STATE if not initialized

otInstance ***esp_openthread_get_instance**(void)

This function acquires the underlying OpenThread instance.

Note: This function can be called on other tasks without lock.

Returns The OpenThread instance pointer

Header File

- components/openthread/include/esp_openthread_types.h

Structures

struct **esp_openthread_mainloop_context_t**

This structure represents a context for a select() based mainloop.

Public Members

fd_set **read_fds**

The read file descriptors

fd_set **write_fds**

The write file descriptors

fd_set **error_fds**

The error file descriptors

int **max_fd**

The max file descriptor

struct timeval **timeout**

The timeout

struct **esp_openthread_uart_config_t**

The uart port config for OpenThread.

Public Members

uart_port_t **port**

UART port number

uart_config_t **uart_config**

UART configuration, see *uart_config_t* docs

int **rx_pin**

UART RX pin

int **tx_pin**

UART TX pin

struct **esp_openthread_radio_config_t**

The OpenThread radio configuration.

Public Members

esp_openthread_radio_mode_t **radio_mode**

The radio mode

esp_openthread_uart_config_t **radio_uart_config**

The uart configuration to RCP

struct **esp_openthread_host_connection_config_t**

The OpenThread host connection configuration.

Public Members

esp_openthread_host_connection_mode_t **host_connection_mode**

The host connection mode

esp_openthread_uart_config_t **host_uart_config**

The uart configuration to host

struct **esp_openthread_port_config_t**

The OpenThread port specific configuration.

Public Members

const char ***storage_partition_name**

The partition for storing OpenThread dataset

uint8_t **netif_queue_size**

The packet queue size for the network interface

uint8_t **task_queue_size**

The task queue size

struct **esp_openthread_platform_config_t**

The OpenThread platform configuration.

Public Members

esp_openthread_radio_config_t **radio_config**

The radio configuration

esp_openthread_host_connection_config_t **host_config**

The host connection configuration

esp_openthread_port_config_t **port_config**

The port configuration

Enumerations

enum **esp_openthread_event_t**

OpenThread event declarations.

Values:

enumerator **OPENTHREAD_EVENT_START**

OpenThread stack start

enumerator **OPENTHREAD_EVENT_STOP**

OpenThread stack stop

enumerator **OPENTHREAD_EVENT_IF_UP**

OpenThread network interface up

enumerator **OPENTHREAD_EVENT_IF_DOWN**

OpenThread network interface down

enumerator **OPENTHREAD_EVENT_GOT_IP6**

OpenThread stack added IPv6 address

enumerator **OPENTHREAD_EVENT_LOST_IP6**

OpenThread stack removed IPv6 address

enumerator **OPENTHREAD_EVENT_MULTICAST_GROUP_JOIN**

OpenThread stack joined IPv6 multicast group

enumerator **OPENTHREAD_EVENT_MULTICAST_GROUP_LEAVE**

OpenThread stack left IPv6 multicast group

enum **esp_openthread_radio_mode_t**

The radio mode of OpenThread.

Values:

enumerator **RADIO_MODE_NATIVE**

Use the native 15.4 radio

enumerator **RADIO_MODE_UART_RCP**

UART connection to a 15.4 capable radio co-processor (RCP)

enumerator **RADIO_MODE_SPI_RCP**

SPI connection to a 15.4 capable radio co-processor (RCP)

enum **esp_openthread_host_connection_mode_t**

How OpenThread connects to the host.

Values:

enumerator **HOST_CONNECTION_MODE_NONE**

Disable host connection

enumerator **HOST_CONNECTION_MODE_CLI_UART**

CLI UART connection to the host

enumerator **HOST_CONNECTION_MODE_RCP_UART**

RCP UART connection to the host

Header File

- components/openthread/include/esp_openthread_lock.h

Functions

esp_err_t **esp_openthread_lock_init**(void)

This function initializes the OpenThread API lock.

Returns
- ESP_OK on success
- ESP_ERR_NO_MEM if allocation has failed
- ESP_ERR_INVALID_STATE if already initialized

void **esp_openthread_lock_deinit**(void)

This function deinitializes the OpenThread API lock.

bool **esp_openthread_lock_acquire**(TickType_t block_ticks)

This functions acquires the OpenThread API lock.

Note: Every OT APIs that takes an otInstance argument MUST be protected with this API lock except that the call site is in OT callbacks.

Parameters **block_ticks** –**[in]** The maxinum number of RTOS ticks to wait for the lock.
Returns
- True on lock acquired
- False on failing to acquire the lock with the timeout.

void **esp_openthread_lock_release**(void)

This function releases the OpenThread API lock.

Header File

- components/openthread/include/esp_openthread_netif_glue.h

Functions

void ***esp_openthread_netif_glue_init**(const *esp_openthread_platform_config_t* *config)

This function initializes the OpenThread network interface glue.

Parameters **config** –**[in]** The platform configuration.
Returns
- glue pointer on success
- NULL on failure

void **esp_openthread_netif_glue_deinit**(void)

This function deinitializes the OpenThread network interface glue.

esp_netif_t ***esp_openthread_get_netif**(void)

This function acquires the OpenThread netif.

Returns The OpenThread netif or NULL if not initialzied.

Header File

- components/openthread/include/esp_openthread_border_router.h

Functions

esp_err_t **esp_openthread_border_router_init**(esp_netif_t *backbone_netif)

Initializes the border router features of OpenThread.

Note: Calling this function will make the device behave as an OpenThread border router. Kconfig option CONFIG_OPENTHREAD_BORDER_ROUTER is required.

Parameters **backbone_netif** –**[in]** The backbone network interface (WiFi or ethernet)

Returns

- ESP_OK on success
- ESP_ERR_NOT_SUPPORTED if feature not supported
- ESP_ERR_INVALID_STATE if already initialized
- ESP_FIAL on other failures

esp_err_t **esp_openthread_border_router_deinit**(void)

Deinitializes the border router features of OpenThread.

Returns

- ESP_OK on success
- ESP_ERR_INVALID_STATE if not initialized
- ESP_FIAL on other failures

esp_netif_t ***esp_openthread_get_backbone_netif**(void)

Gets the backbone interface of OpenThread border router.

Returns The backbone interface or NULL if border router not initialized.

Thread is an IPv6-based mesh networking technology for IoT. Code examples for the Thread API are provided in the openthread directory of ESP-IDF examples.

2.2.4 IP Network Layer

ESP-NETIF

The purpose of ESP-NETIF library is twofold:

- It provides an abstraction layer for the application on top of the TCP/IP stack. This will allow applications to choose between IP stacks in the future.
- The APIs it provides are thread safe, even if the underlying TCP/IP stack APIs are not.

ESP-IDF currently implements ESP-NETIF for the lwIP TCP/IP stack only. However, the adapter itself is TCP/IP implementation agnostic and different implementations are possible.

Some ESP-NETIF API functions are intended to be called by application code, for example to get/set interface IP addresses, configure DHCP. Other functions are intended for internal ESP-IDF use by the network driver layer.

In many cases, applications do not need to call ESP-NETIF APIs directly as they are called from the default network event handlers.

ESP-NETIF component is a successor of the tcpip_adapter, former network interface abstraction, which has become deprecated since IDF v4.1. Please refer to the *TCP/IP Adapter Migration Guide* section in case existing applications to be ported to use the esp-netif API instead.

ESP-NETIF architecture

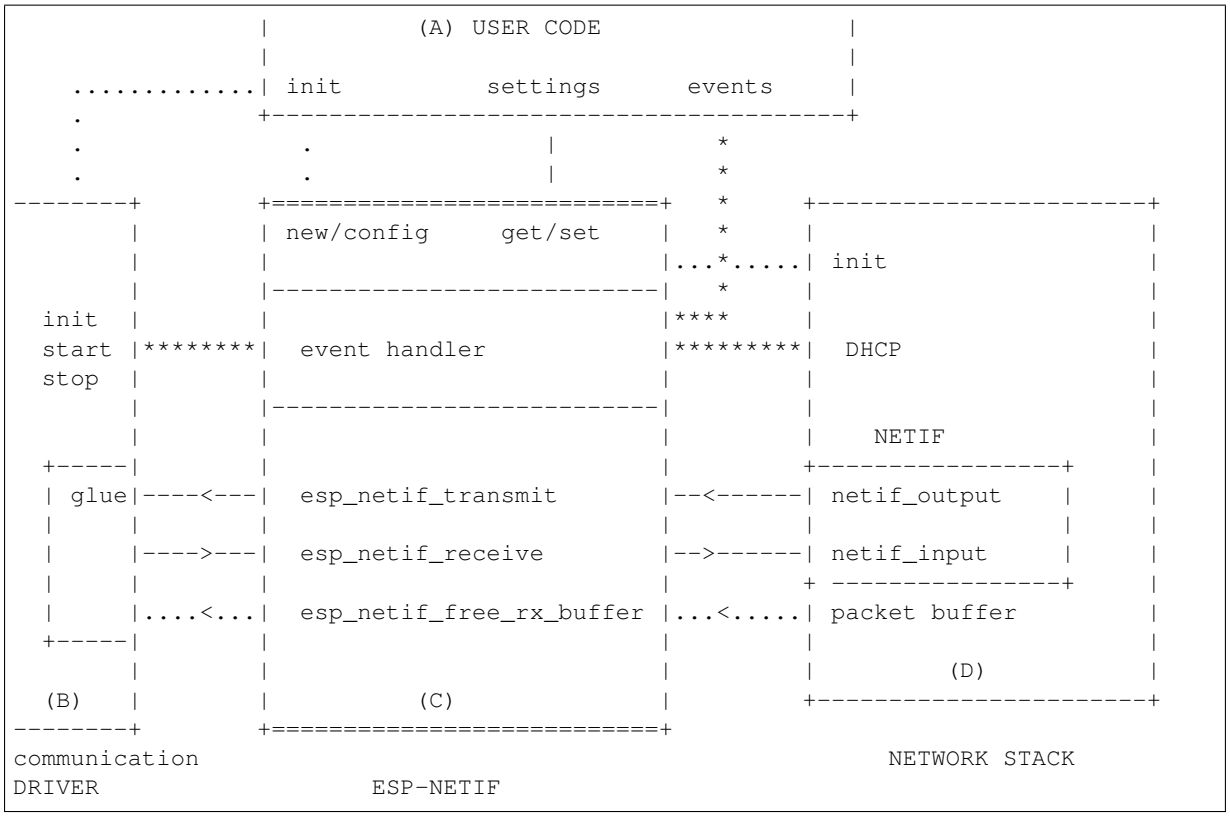

Data and event flow in the diagram

- `. . . . . .` Initialization line from user code to ESP-NETIF and communication driver
- `--<--->--` Data packets going from communication media to TCP/IP stack and back
- `********` Events aggregated in ESP-NETIF propagates to driver, user code and network stack
- `|` User settings and runtime configuration

ESP-NETIF interaction

A) User code, boiler plate Overall application interaction with a specific IO driver for communication media and configured TCP/IP network stack is abstracted using ESP-NETIF APIs and outlined as below:

A) Initialization code

1) Initializes IO driver
2) Creates a new instance of ESP-NETIF and configure with

- ESP-NETIF specific options (flags, behaviour, name)
- Network stack options (netif init and input functions, not publicly available)
- IO driver specific options (transmit, free rx buffer functions, IO driver handle)

3) Attaches the IO driver handle to the ESP-NETIF instance created in the above steps
4) Configures event handlers

- use default handlers for common interfaces defined in IO drivers; or define a specific handlers for customised behaviour/new interfaces
- register handlers for app related events (such as IP lost/acquired)

B) Interaction with network interfaces using ESP-NETIF API

- Getting and setting TCP/IP related parameters (DHCP, IP, etc)
- Receiving IP events (connect/disconnect)

- Controlling application lifecycle (set interface up/down)

B) Communication driver, IO driver, media driver Communication driver plays these two important roles in relation with ESP-NETIF:

1) Event handlers: Define behaviour patterns of interaction with ESP-NETIF (for example: ethernet link-up -> turn netif on)
2) Glue IO layer: Adapts the input/output functions to use ESP-NETIF transmit, receive and free receive buffer

- Installs driver_transmit to appropriate ESP-NETIF object, so that outgoing packets from network stack are passed to the IO driver
- Calls *esp_netif_receive()* to pass incoming data to network stack

C) ESP-NETIF, former tcpip_adapter ESP-NETIF is an intermediary between an IO driver and a network stack, connecting packet data path between these two. As that it provides a set of interfaces for attaching a driver to ESP-NETIF object (runtime) and configuring a network stack (compile time). In addition to that a set of API is provided to control network interface lifecycle and its TCP/IP properties. As an overview, the ESP-NETIF public interface could be divided into these 6 groups:

1) Initialization APIs (to create and configure ESP-NETIF instance)
2) Input/Output API (for passing data between IO driver and network stack)
3) Event or Action API

- Used for network interface lifecycle management
- ESP-NETIF provides building blocks for designing event handlers

4) Setters and Getters for basic network interface properties
5) Network stack abstraction: enabling user interaction with TCP/IP stack

- Set interface up or down
- DHCP server and client API
- DNS API

6) Driver conversion utilities

D) Network stack Network stack has no public interaction with application code with regard to public interfaces and shall be fully abstracted by ESP-NETIF API.

ESP-NETIF programmer's manual Please refer to the example section for basic initialization of default interfaces:

- WiFi Station: wifi/getting_started/station/main/station_example_main.c
- WiFi Access Point: wifi/getting_started/softAP/main/softap_example_main.c
- Ethernet: ethernet/basic/main/ethernet_example_main.c

For more specific cases please consult this guide: *ESP-NETIF Custom I/O Driver*.

WiFi default initialization The initialization code as well as registering event handlers for default interfaces, such as softAP and station, are provided in two separate APIs to facilitate simple startup code for most applications:

- *esp_netif_create_default_wifi_ap()*
- *esp_netif_create_default_wifi_sta()*

Please note that these functions return the `esp_netif` handle, i.e. a pointer to a network interface object allocated and configured with default settings, which as a consequence, means that:

- The created object has to be destroyed if a network de-initialization is provided by an application using *esp_netif_destroy_default_wifi()*.
- These *default* interfaces must not be created multiple times, unless the created handle is deleted using *esp_netif_destroy()*.
- When using Wifi in `AP+STA` mode, both these interfaces has to be created.

API Reference

Header File

- components/esp_netif/include/esp_netif.h

Functions

esp_err_t **esp_netif_init**(void)

Initialize the underlying TCP/IP stack.

Note: This function should be called exactly once from application code, when the application starts up.

Returns
- ESP_OK on success
- ESP_FAIL if initializing failed

esp_err_t **esp_netif_deinit**(void)

Deinitialize the esp-netif component (and the underlying TCP/IP stack)

Note: Deinitialization is not supported yet

Returns
- ESP_ERR_INVALID_STATE if esp_netif not initialized
- ESP_ERR_NOT_SUPPORTED otherwise

esp_netif_t ***esp_netif_new**(const esp_netif_config_t *esp_netif_config)

Creates an instance of new esp-netif object based on provided config.

Parameters **esp_netif_config** –**[in]** pointer esp-netif configuration
Returns
- pointer to esp-netif object on success
- NULL otherwise

void **esp_netif_destroy**(esp_netif_t *esp_netif)

Destroys the esp_netif object.

Parameters **esp_netif** –**[in]** pointer to the object to be deleted

esp_err_t **esp_netif_set_driver_config**(esp_netif_t *esp_netif, const esp_netif_driver_ifconfig_t *driver_config)

Configures driver related options of esp_netif object.

Parameters
- **esp_netif** –**[inout]** pointer to the object to be configured
- **driver_config** –**[in]** pointer esp-netif io driver related configuration

Returns
- ESP_OK on success
- ESP_ERR_ESP_NETIF_INVALID_PARAMS if invalid parameters provided

esp_err_t **esp_netif_attach**(esp_netif_t *esp_netif, esp_netif_iodriver_handle driver_handle)

Attaches esp_netif instance to the io driver handle.

Calling this function enables connecting specific esp_netif object with already initialized io driver to update esp_netif object with driver specific configuration (i.e. calls post_attach callback, which typically sets io driver callbacks to esp_netif instance and starts the driver)

Parameters
- **esp_netif** –**[inout]** pointer to esp_netif object to be attached
- **driver_handle** –**[in]** pointer to the driver handle

Returns

- ESP_OK on success
- ESP_ERR_ESP_NETIF_DRIVER_ATTACH_FAILED if driver's pot_attach callback failed

esp_err_t **esp_netif_receive**(esp_netif_t *esp_netif, void *buffer, size_t len, void *eb)

Passes the raw packets from communication media to the appropriate TCP/IP stack.

This function is called from the configured (peripheral) driver layer. The data are then forwarded as frames to the TCP/IP stack.

Parameters
- **esp_netif** –**[in]** Handle to esp-netif instance
- **buffer** –**[in]** Received data
- **len** –**[in]** Length of the data frame
- **eb** –**[in]** Pointer to internal buffer (used in Wi-Fi driver)

Returns
- ESP_OK

void **esp_netif_action_start**(void *esp_netif, *esp_event_base_t* base, int32_t event_id, void *data)

Default building block for network interface action upon IO driver start event Creates network interface, if AUTOUP enabled turns the interface on, if DHCPS enabled starts dhcp server.

Note: This API can be directly used as event handler

Parameters
- **esp_netif** –**[in]** Handle to esp-netif instance
- **base** –
- **event_id** –
- **data** –

void **esp_netif_action_stop**(void *esp_netif, *esp_event_base_t* base, int32_t event_id, void *data)

Default building block for network interface action upon IO driver stop event.

Note: This API can be directly used as event handler

Parameters
- **esp_netif** –**[in]** Handle to esp-netif instance
- **base** –
- **event_id** –
- **data** –

void **esp_netif_action_connected**(void *esp_netif, *esp_event_base_t* base, int32_t event_id, void *data)

Default building block for network interface action upon IO driver connected event.

Note: This API can be directly used as event handler

Parameters
- **esp_netif** –**[in]** Handle to esp-netif instance
- **base** –
- **event_id** –
- **data** –

void **esp_netif_action_disconnected**(void *esp_netif, *esp_event_base_t* base, int32_t event_id, void *data)

Default building block for network interface action upon IO driver disconnected event.

Note: This API can be directly used as event handler

Parameters

- **esp_netif** –**[in]** Handle to esp-netif instance
- **base** –
- **event_id** –
- **data** –

void **esp_netif_action_got_ip**(void *esp_netif, *esp_event_base_t* base, int32_t event_id, void *data)

Default building block for network interface action upon network got IP event.

Note: This API can be directly used as event handler

Parameters

- **esp_netif** –**[in]** Handle to esp-netif instance
- **base** –
- **event_id** –
- **data** –

void **esp_netif_action_join_ip6_multicast_group**(void *esp_netif, *esp_event_base_t* base, int32_t event_id, void *data)

Default building block for network interface action upon IPv6 multicast group join.

Note: This API can be directly used as event handler

Parameters

- **esp_netif** –**[in]** Handle to esp-netif instance
- **base** –
- **event_id** –
- **data** –

void **esp_netif_action_leave_ip6_multicast_group**(void *esp_netif, *esp_event_base_t* base, int32_t event_id, void *data)

Default building block for network interface action upon IPv6 multicast group leave.

Note: This API can be directly used as event handler

Parameters

- **esp_netif** –**[in]** Handle to esp-netif instance
- **base** –
- **event_id** –
- **data** –

void **esp_netif_action_add_ip6_address**(void *esp_netif, *esp_event_base_t* base, int32_t event_id, void *data)

Default building block for network interface action upon IPv6 address added by the underlying stack.

Note: This API can be directly used as event handler

Parameters
- **esp_netif** –**[in]** Handle to esp-netif instance
- **base** –
- **event_id** –
- **data** –

void **esp_netif_action_remove_ip6_address**(void *esp_netif, *esp_event_base_t* base, int32_t event_id, void *data)

Default building block for network interface action upon IPv6 address removed by the underlying stack.

Note: This API can be directly used as event handler

Parameters
- **esp_netif** –**[in]** Handle to esp-netif instance
- **base** –
- **event_id** –
- **data** –

esp_err_t **esp_netif_set_mac**(esp_netif_t *esp_netif, uint8_t mac[])

Set the mac address for the interface instance.

Parameters
- **esp_netif** –**[in]** Handle to esp-netif instance
- **mac** –**[in]** Desired mac address for the related network interface

Returns
- ESP_OK - success
- ESP_ERR_ESP_NETIF_IF_NOT_READY - interface status error
- ESP_ERR_NOT_SUPPORTED - mac not supported on this interface

esp_err_t **esp_netif_get_mac**(esp_netif_t *esp_netif, uint8_t mac[])

Get the mac address for the interface instance.

Parameters
- **esp_netif** –**[in]** Handle to esp-netif instance
- **mac** –**[out]** Resultant mac address for the related network interface

Returns
- ESP_OK - success
- ESP_ERR_ESP_NETIF_IF_NOT_READY - interface status error
- ESP_ERR_NOT_SUPPORTED - mac not supported on this interface

esp_err_t **esp_netif_set_hostname**(esp_netif_t *esp_netif, const char *hostname)

Set the hostname of an interface.

The configured hostname overrides the default configuration value CONFIG_LWIP_LOCAL_HOSTNAME. Please note that when the hostname is altered after interface started/connected the changes would only be reflected once the interface restarts/reconnects

Parameters
- **esp_netif** –**[in]** Handle to esp-netif instance
- **hostname** –**[in]** New hostname for the interface. Maximum length 32 bytes.

Returns
- ESP_OK - success
- ESP_ERR_ESP_NETIF_IF_NOT_READY - interface status error
- ESP_ERR_ESP_NETIF_INVALID_PARAMS - parameter error

esp_err_t **esp_netif_get_hostname**(esp_netif_t *esp_netif, const char **hostname)

Get interface hostname.

Parameters
- **esp_netif** –**[in]** Handle to esp-netif instance
- **hostname** –**[out]** Returns a pointer to the hostname. May be NULL if no hostname is set. If set non-NULL, pointer remains valid (and string may change if the hostname changes).

Returns
- ESP_OK - success
- ESP_ERR_ESP_NETIF_IF_NOT_READY - interface status error
- ESP_ERR_ESP_NETIF_INVALID_PARAMS - parameter error

bool **esp_netif_is_netif_up**(esp_netif_t *esp_netif)

Test if supplied interface is up or down.

Parameters **esp_netif** –**[in]** Handle to esp-netif instance

Returns
- true - Interface is up
- false - Interface is down

esp_err_t **esp_netif_get_ip_info**(esp_netif_t *esp_netif, esp_netif_ip_info_t *ip_info)

Get interface's IP address information.

If the interface is up, IP information is read directly from the TCP/IP stack. If the interface is down, IP information is read from a copy kept in the ESP-NETIF instance

Parameters
- **esp_netif** –**[in]** Handle to esp-netif instance
- **ip_info** –**[out]** If successful, IP information will be returned in this argument.

Returns
- ESP_OK
- ESP_ERR_ESP_NETIF_INVALID_PARAMS

esp_err_t **esp_netif_get_old_ip_info**(esp_netif_t *esp_netif, esp_netif_ip_info_t *ip_info)

Get interface's old IP information.

Returns an "old" IP address previously stored for the interface when the valid IP changed.

If the IP lost timer has expired (meaning the interface was down for longer than the configured interval) then the old IP information will be zero.

Parameters
- **esp_netif** –**[in]** Handle to esp-netif instance
- **ip_info** –**[out]** If successful, IP information will be returned in this argument.

Returns
- ESP_OK
- ESP_ERR_ESP_NETIF_INVALID_PARAMS

esp_err_t **esp_netif_set_ip_info**(esp_netif_t *esp_netif, const esp_netif_ip_info_t *ip_info)

Set interface's IP address information.

This function is mainly used to set a static IP on an interface.

If the interface is up, the new IP information is set directly in the TCP/IP stack.

The copy of IP information kept in the ESP-NETIF instance is also updated (this copy is returned if the IP is queried while the interface is still down.)

Note: DHCP client/server must be stopped (if enabled for this interface) before setting new IP information.

Note: Calling this interface for may generate a SYSTEM_EVENT_STA_GOT_IP or SYSTEM_EVENT_ETH_GOT_IP event.

Parameters
- **esp_netif** –**[in]** Handle to esp-netif instance
- **ip_info** –**[in]** IP information to set on the specified interface

Returns
- ESP_OK
- ESP_ERR_ESP_NETIF_INVALID_PARAMS
- ESP_ERR_ESP_NETIF_DHCP_NOT_STOPPED If DHCP server or client is still running

esp_err_t **esp_netif_set_old_ip_info**(esp_netif_t *esp_netif, const esp_netif_ip_info_t *ip_info)

Set interface old IP information.

This function is called from the DHCP client (if enabled), before a new IP is set. It is also called from the default handlers for the SYSTEM_EVENT_STA_CONNECTED and SYSTEM_EVENT_ETH_CONNECTED events.

Calling this function stores the previously configured IP, which can be used to determine if the IP changes in the future.

If the interface is disconnected or down for too long, the "IP lost timer" will expire (after the configured interval) and set the old IP information to zero.

Parameters
- **esp_netif** –**[in]** Handle to esp-netif instance
- **ip_info** –**[in]** Store the old IP information for the specified interface

Returns
- ESP_OK
- ESP_ERR_ESP_NETIF_INVALID_PARAMS

int **esp_netif_get_netif_impl_index**(esp_netif_t *esp_netif)

Get net interface index from network stack implementation.

Note: This index could be used in `setsockopt()` to bind socket with multicast interface

Parameters **esp_netif** –**[in]** Handle to esp-netif instance
Returns implementation specific index of interface represented with supplied esp_netif

esp_err_t **esp_netif_get_netif_impl_name**(esp_netif_t *esp_netif, char *name)

Get net interface name from network stack implementation.

Note: This name could be used in `setsockopt()` to bind socket with appropriate interface

Parameters
- **esp_netif** –**[in]** Handle to esp-netif instance
- **name** –**[out]** Interface name as specified in underlying TCP/IP stack. Note that the actual name will be copied to the specified buffer, which must be allocated to hold maximum interface name size (6 characters for lwIP)

Returns
- ESP_OK
- ESP_ERR_ESP_NETIF_INVALID_PARAMS

esp_err_t **esp_netif_dhcps_option**(esp_netif_t *esp_netif, esp_netif_dhcp_option_mode_t opt_op, esp_netif_dhcp_option_id_t opt_id, void *opt_val, uint32_t opt_len)

Set or Get DHCP server option.

Parameters

- **esp_netif** –**[in]** Handle to esp-netif instance
- **opt_op** –**[in]** ESP_NETIF_OP_SET to set an option, ESP_NETIF_OP_GET to get an option.
- **opt_id** –**[in]** Option index to get or set, must be one of the supported enum values.
- **opt_val** –**[inout]** Pointer to the option parameter.
- **opt_len** –**[in]** Length of the option parameter.

Returns

- ESP_OK
- ESP_ERR_ESP_NETIF_INVALID_PARAMS
- ESP_ERR_ESP_NETIF_DHCP_ALREADY_STOPPED
- ESP_ERR_ESP_NETIF_DHCP_ALREADY_STARTED

esp_err_t **esp_netif_dhcpc_option**(esp_netif_t *esp_netif, esp_netif_dhcp_option_mode_t opt_op, esp_netif_dhcp_option_id_t opt_id, void *opt_val, uint32_t opt_len)

Set or Get DHCP client option.

Parameters

- **esp_netif** –**[in]** Handle to esp-netif instance
- **opt_op** –**[in]** ESP_NETIF_OP_SET to set an option, ESP_NETIF_OP_GET to get an option.
- **opt_id** –**[in]** Option index to get or set, must be one of the supported enum values.
- **opt_val** –**[inout]** Pointer to the option parameter.
- **opt_len** –**[in]** Length of the option parameter.

Returns

- ESP_OK
- ESP_ERR_ESP_NETIF_INVALID_PARAMS
- ESP_ERR_ESP_NETIF_DHCP_ALREADY_STOPPED
- ESP_ERR_ESP_NETIF_DHCP_ALREADY_STARTED

esp_err_t **esp_netif_dhcpc_start**(esp_netif_t *esp_netif)

Start DHCP client (only if enabled in interface object)

Note: The default event handlers for the SYSTEM_EVENT_STA_CONNECTED and SYSTEM_EVENT_ETH_CONNECTED events call this function.

Parameters **esp_netif** –**[in]** Handle to esp-netif instance

Returns

- ESP_OK
- ESP_ERR_ESP_NETIF_INVALID_PARAMS
- ESP_ERR_ESP_NETIF_DHCP_ALREADY_STARTED
- ESP_ERR_ESP_NETIF_DHCPC_START_FAILED

esp_err_t **esp_netif_dhcpc_stop**(esp_netif_t *esp_netif)

Stop DHCP client (only if enabled in interface object)

Note: Calling action_netif_stop() will also stop the DHCP Client if it is running.

Parameters **esp_netif** –**[in]** Handle to esp-netif instance

Returns

- ESP_OK
- ESP_ERR_ESP_NETIF_INVALID_PARAMS

- ESP_ERR_ESP_NETIF_DHCP_ALREADY_STOPPED
- ESP_ERR_ESP_NETIF_IF_NOT_READY

esp_err_t **esp_netif_dhcpc_get_status**(esp_netif_t *esp_netif, esp_netif_dhcp_status_t *status)

Get DHCP client status.

Parameters
- **esp_netif** –**[in]** Handle to esp-netif instance
- **status** –**[out]** If successful, the status of DHCP client will be returned in this argument.

Returns
- ESP_OK

esp_err_t **esp_netif_dhcps_get_status**(esp_netif_t *esp_netif, esp_netif_dhcp_status_t *status)

Get DHCP Server status.

Parameters
- **esp_netif** –**[in]** Handle to esp-netif instance
- **status** –**[out]** If successful, the status of the DHCP server will be returned in this argument.

Returns
- ESP_OK

esp_err_t **esp_netif_dhcps_start**(esp_netif_t *esp_netif)

Start DHCP server (only if enabled in interface object)

Parameters **esp_netif** –**[in]** Handle to esp-netif instance

Returns
- ESP_OK
- ESP_ERR_ESP_NETIF_INVALID_PARAMS
- ESP_ERR_ESP_NETIF_DHCP_ALREADY_STARTED

esp_err_t **esp_netif_dhcps_stop**(esp_netif_t *esp_netif)

Stop DHCP server (only if enabled in interface object)

Parameters **esp_netif** –**[in]** Handle to esp-netif instance

Returns
- ESP_OK
- ESP_ERR_ESP_NETIF_INVALID_PARAMS
- ESP_ERR_ESP_NETIF_DHCP_ALREADY_STOPPED
- ESP_ERR_ESP_NETIF_IF_NOT_READY

esp_err_t **esp_netif_set_dns_info**(esp_netif_t *esp_netif, esp_netif_dns_type_t type, esp_netif_dns_info_t *dns)

Set DNS Server information.

This function behaves differently if DHCP server or client is enabled

If DHCP client is enabled, main and backup DNS servers will be updated automatically from the DHCP lease if the relevant DHCP options are set. Fallback DNS Server is never updated from the DHCP lease and is designed to be set via this API. If DHCP client is disabled, all DNS server types can be set via this API only.

If DHCP server is enabled, the Main DNS Server setting is used by the DHCP server to provide a DNS Server option to DHCP clients (Wi-Fi stations).

- The default Main DNS server is typically the IP of the DHCP server itself.
- This function can override it by setting server type ESP_NETIF_DNS_MAIN.
- Other DNS Server types are not supported for the DHCP server.
- To propagate the DNS info to client, please stop the DHCP server before using this API.

Parameters
- **esp_netif** –**[in]** Handle to esp-netif instance
- **type** –**[in]** Type of DNS Server to set: ESP_NETIF_DNS_MAIN, ESP_NETIF_DNS_BACKUP, ESP_NETIF_DNS_FALLBACK

- **dns** –**[in]** DNS Server address to set

Returns

- ESP_OK on success
- ESP_ERR_ESP_NETIF_INVALID_PARAMS invalid params

esp_err_t **esp_netif_get_dns_info**(esp_netif_t *esp_netif, esp_netif_dns_type_t type, esp_netif_dns_info_t *dns)

Get DNS Server information.

Return the currently configured DNS Server address for the specified interface and Server type.

This may be result of a previous call to *esp_netif_set_dns_info()*. If the interface's DHCP client is enabled, the Main or Backup DNS Server may be set by the current DHCP lease.

Parameters

- **esp_netif** –**[in]** Handle to esp-netif instance
- **type** –**[in]** Type of DNS Server to get: ESP_NETIF_DNS_MAIN, ESP_NETIF_DNS_BACKUP, ESP_NETIF_DNS_FALLBACK
- **dns** –**[out]** DNS Server result is written here on success

Returns

- ESP_OK on success
- ESP_ERR_ESP_NETIF_INVALID_PARAMS invalid params

esp_err_t **esp_netif_create_ip6_linklocal**(esp_netif_t *esp_netif)

Create interface link-local IPv6 address.

Cause the TCP/IP stack to create a link-local IPv6 address for the specified interface.

This function also registers a callback for the specified interface, so that if the link-local address becomes verified as the preferred address then a SYSTEM_EVENT_GOT_IP6 event will be sent.

Parameters **esp_netif** –**[in]** Handle to esp-netif instance

Returns

- ESP_OK
- ESP_ERR_ESP_NETIF_INVALID_PARAMS

esp_err_t **esp_netif_get_ip6_linklocal**(esp_netif_t *esp_netif, esp_ip6_addr_t *if_ip6)

Get interface link-local IPv6 address.

If the specified interface is up and a preferred link-local IPv6 address has been created for the interface, return a copy of it.

Parameters

- **esp_netif** –**[in]** Handle to esp-netif instance
- **if_ip6** –**[out]** IPv6 information will be returned in this argument if successful.

Returns

- ESP_OK
- ESP_FAIL If interface is down, does not have a link-local IPv6 address, or the link-local IPv6 address is not a preferred address.

esp_err_t **esp_netif_get_ip6_global**(esp_netif_t *esp_netif, esp_ip6_addr_t *if_ip6)

Get interface global IPv6 address.

If the specified interface is up and a preferred global IPv6 address has been created for the interface, return a copy of it.

Parameters

- **esp_netif** –**[in]** Handle to esp-netif instance
- **if_ip6** –**[out]** IPv6 information will be returned in this argument if successful.

Returns

- ESP_OK
- ESP_FAIL If interface is down, does not have a global IPv6 address, or the global IPv6 address is not a preferred address.

int **esp_netif_get_all_ip6**(esp_netif_t *esp_netif, esp_ip6_addr_t if_ip6[])

Get all IPv6 addresses of the specified interface.

Parameters
- **esp_netif** –**[in]** Handle to esp-netif instance
- **if_ip6** –**[out]** Array of IPv6 addresses will be copied to the argument

Returns number of returned IPv6 addresses

void **esp_netif_set_ip4_addr**(esp_ip4_addr_t *addr, uint8_t a, uint8_t b, uint8_t c, uint8_t d)

Sets IPv4 address to the specified octets.

Parameters
- **addr** –**[out]** IP address to be set
- **a** –the first octet (127 for IP 127.0.0.1)
- **b** –
- **c** –
- **d** –

char ***esp_ip4addr_ntoa**(const esp_ip4_addr_t *addr, char *buf, int buflen)

Converts numeric IP address into decimal dotted ASCII representation.

Parameters
- **addr** –ip address in network order to convert
- **buf** –target buffer where the string is stored
- **buflen** –length of buf

Returns either pointer to buf which now holds the ASCII representation of addr or NULL if buf was too small

uint32_t **esp_ip4addr_aton**(const char *addr)

Ascii internet address interpretation routine The value returned is in network order.

Parameters **addr** –IP address in ascii representation (e.g. "127.0.0.1")
Returns ip address in network order

esp_err_t **esp_netif_str_to_ip4**(const char *src, esp_ip4_addr_t *dst)

Converts Ascii internet IPv4 address into esp_ip4_addr_t.

Parameters
- **src** –**[in]** IPv4 address in ascii representation (e.g. "127.0.0.1")
- **dst** –**[out]** Address of the target esp_ip4_addr_t structure to receive converted address

Returns
- ESP_OK on success
- ESP_FAIL if conversion failed
- ESP_ERR_INVALID_ARG if invalid parameter is passed into

esp_err_t **esp_netif_str_to_ip6**(const char *src, esp_ip6_addr_t *dst)

Converts Ascii internet IPv6 address into esp_ip4_addr_t Zeros in the IP address can be stripped or completely ommited: "2001:db8:85a3:0:0:0:2:1" or "2001:db8::2:1")

Parameters
- **src** –**[in]** IPv6 address in ascii representation (e.g. "2001:0db8:85a3:0000:0000:0000:0002:0001")
- **dst** –**[out]** Address of the target esp_ip6_addr_t structure to receive converted address

Returns
- ESP_OK on success
- ESP_FAIL if conversion failed
- ESP_ERR_INVALID_ARG if invalid parameter is passed into

esp_netif_iodriver_handle **esp_netif_get_io_driver**(esp_netif_t *esp_netif)

Gets media driver handle for this esp-netif instance.

Parameters **esp_netif** –**[in]** Handle to esp-netif instance
Returns opaque pointer of related IO driver

esp_netif_t *esp_netif_get_handle_from_ifkey(const char *if_key)

Searches over a list of created objects to find an instance with supplied if key.

Parameters **if_key** –Textual description of network interface
Returns Handle to esp-netif instance

esp_netif_flags_t esp_netif_get_flags(esp_netif_t *esp_netif)

Returns configured flags for this interface.

Parameters **esp_netif** –**[in]** Handle to esp-netif instance
Returns Configuration flags

const char *esp_netif_get_ifkey(esp_netif_t *esp_netif)

Returns configured interface key for this esp-netif instance.

Parameters **esp_netif** –**[in]** Handle to esp-netif instance
Returns Textual description of related interface

const char *esp_netif_get_desc(esp_netif_t *esp_netif)

Returns configured interface type for this esp-netif instance.

Parameters **esp_netif** –**[in]** Handle to esp-netif instance
Returns Enumerated type of this interface, such as station, AP, ethernet

int esp_netif_get_route_prio(esp_netif_t *esp_netif)

Returns configured routing priority number.

Parameters **esp_netif** –**[in]** Handle to esp-netif instance
Returns Integer representing the instance' s route-prio, or -1 if invalid paramters

int32_t esp_netif_get_event_id(esp_netif_t *esp_netif, esp_netif_ip_event_type_t event_type)

Returns configured event for this esp-netif instance and supplied event type.

Parameters
- **esp_netif** –**[in]** Handle to esp-netif instance
- **event_type** –(either get or lost IP)

Returns specific event id which is configured to be raised if the interface lost or acquired IP address
-1 if supplied event_type is not known

esp_netif_t *esp_netif_next(esp_netif_t *esp_netif)

Iterates over list of interfaces. Returns first netif if NULL given as parameter.

Parameters **esp_netif** –**[in]** Handle to esp-netif instance
Returns First netif from the list if supplied parameter is NULL, next one otherwise

size_t esp_netif_get_nr_of_ifs(void)

Returns number of registered esp_netif objects.

Returns Number of esp_netifs

void esp_netif_netstack_buf_ref(void *netstack_buf)

increase the reference counter of net stack buffer

Parameters **netstack_buf** –**[in]** the net stack buffer

void esp_netif_netstack_buf_free(void *netstack_buf)

free the netstack buffer

Parameters **netstack_buf** –**[in]** the net stack buffer

Macros

_ESP_NETIF_SUPPRESS_LEGACY_WARNING_

WiFi default API reference

Header File

- components/esp_wifi/include/esp_wifi_default.h

Functions

esp_err_t **esp_netif_attach_wifi_station**(esp_netif_t *esp_netif)

Attaches wifi station interface to supplied netif.

Parameters **esp_netif** – instance to attach the wifi station to

Returns

- ESP_OK on success
- ESP_FAIL if attach failed

esp_err_t **esp_netif_attach_wifi_ap**(esp_netif_t *esp_netif)

Attaches wifi soft AP interface to supplied netif.

Parameters **esp_netif** – instance to attach the wifi AP to

Returns

- ESP_OK on success
- ESP_FAIL if attach failed

esp_err_t **esp_wifi_set_default_wifi_sta_handlers**(void)

Sets default wifi event handlers for STA interface.

Returns

- ESP_OK on success, error returned from esp_event_handler_register if failed

esp_err_t **esp_wifi_set_default_wifi_ap_handlers**(void)

Sets default wifi event handlers for AP interface.

Returns

- ESP_OK on success, error returned from esp_event_handler_register if failed

esp_err_t **esp_wifi_clear_default_wifi_driver_and_handlers**(void *esp_netif)

Clears default wifi event handlers for supplied network interface.

Parameters **esp_netif** – instance of corresponding if object

Returns

- ESP_OK on success, error returned from esp_event_handler_register if failed

esp_netif_t ***esp_netif_create_default_wifi_ap**(void)

Creates default WIFI AP. In case of any init error this API aborts.

Note: The API creates esp_netif object with default WiFi access point config, attaches the netif to wifi and registers default wifi handlers.

Returns pointer to esp-netif instance

esp_netif_t ***esp_netif_create_default_wifi_sta**(void)

Creates default WIFI STA. In case of any init error this API aborts.

Note: The API creates esp_netif object with default WiFi station config, attaches the netif to wifi and registers default wifi handlers.

Returns pointer to esp-netif instance

void **esp_netif_destroy_default_wifi**(void *esp_netif)

Destroys default WIFI netif created with esp_netif_create_default_wifi_···() API.

Note: This API unregisters wifi handlers and detaches the created object from the wifi. (this function is a no-operation if esp_netif is NULL)

Parameters **esp_netif** –**[in]** object to detach from WiFi and destroy

esp_netif_t ***esp_netif_create_wifi**(*wifi_interface_t* wifi_if, esp_netif_inherent_config_t *esp_netif_config)

Creates esp_netif WiFi object based on the custom configuration.

Attention This API DOES NOT register default handlers!

Parameters

- **wifi_if** –**[in]** type of wifi interface
- **esp_netif_config** –**[in]** inherent esp-netif configuration pointer

Returns pointer to esp-netif instance

esp_err_t **esp_netif_create_default_wifi_mesh_netifs**(esp_netif_t **p_netif_sta, esp_netif_t **p_netif_ap)

Creates default STA and AP network interfaces for esp-mesh.

Both netifs are almost identical to the default station and softAP, but with DHCP client and server disabled. Please note that the DHCP client is typically enabled only if the device is promoted to a root node.

Returns created interfaces which could be ignored setting parameters to NULL if an application code does not need to save the interface instances for further processing.

Parameters

- **p_netif_sta** –**[out]** pointer where the resultant STA interface is saved (if non NULL)
- **p_netif_ap** –**[out]** pointer where the resultant AP interface is saved (if non NULL)

Returns ESP_OK on success

TCP/IP Adapter Migration Guide

TCP/IP Adapter is a network interface abstraction component used in IDF prior to v4.1. This page outlines migration from tcpip_adapter API to its successor *ESP-NETIF*.

Updating network connection code

Network stack initialization Simply replace `tcpip_adapter_init()` with `esp_netif_init()`. Please note that the *ESP-NETIF* initialization API returns standard error code and the `esp_netif_deinit()` for un-initialization is available.

Also replace `#include "tcpip_adapter.h"` with `#include "esp_netif.h"`.

Network interface creation TCP/IP Adapter defined these three interfaces statically:

- WiFi Station
- WiFi Access Point
- Ethernet

Network interface instance shall be explicitly constructed for the *ESP-NETIF* to enable its connection to the TCP/IP stack. For example initialization code for WiFi has to explicitly call `esp_netif_create_default_wifi_sta();` or `esp_netif_create_default_wifi_ap();` after the TCP/IP stack and the event loop have been initialized. Please consult an example initialization code for these three interfaces:

- WiFi Station: wifi/getting_started/station/main/station_example_main.c
- WiFi Access Point: wifi/getting_started/softAP/main/softap_example_main.c
- Ethernet: ethernet/basic/main/ethernet_example_main.c

Replacing other tcpip_adapter API All the tcpip_adapter functions have their esp-netif counter-part. Please refer to the esp_netif.h grouped into these sections:

- Setters/Getters
- DHCP
- DNS
- IP address

Default event handlers Event handlers are moved from tcpip_adapter to appropriate driver code. There is no change from application code perspective, all events shall be handled in the same way. Please note that within IP related event handlers, application code usually receives IP addresses in a form of esp-netif specific struct (not the LwIP structs, but binary compatible). This is the preferred way of printing the address:

```
ESP_LOGI(TAG, "got ip:" IPSTR "\n", IP2STR(&event->ip_info.ip));
```

Instead of

```
ESP_LOGI(TAG, "got ip:%s\n", ip4addr_ntoa(&event->ip_info.ip));
```

Since `ip4addr_ntoa()` is a LwIP API, the esp-netif provides `esp_ip4addr_ntoa()` as a replacement, but the above method is generally preferred.

IP addresses It is preferred to use esp-netif defined IP structures. Please note that the LwIP structs will still work when default compatibility enabled. * esp-netif IP address definitions

Next steps Additional step in porting an application to fully benefit from the *ESP-NETIF* is to disable the tcpip_adapter compatibility layer in the component configuration: `ESP NETIF Adapter` -> `Enable backward compatible tcpip_adapter interface` and check if the project compiles. TCP/IP adapter brings many include dependencies and this step might help in decoupling the application from using specific TCP/IP stack API directly.

ESP-NETIF Custom I/O Driver

This section outlines implementing a new I/O driver with esp-netif connection capabilities. By convention the I/O driver has to register itself as an esp-netif driver and thus holds a dependency on esp-netif component and is responsible for providing data path functions, post-attach callback and in most cases also default event handlers to define network interface actions based on driver' s lifecycle transitions.

Packet input/output As shown in the diagram, the following three API functions for the packet data path must be defined for connecting with esp-netif:

- *`esp_netif_transmit()`*
- *`esp_netif_free_rx_buffer()`*
- *`esp_netif_receive()`*

The first two functions for transmitting and freeing the rx buffer are provided as callbacks, i.e. they get called from esp-netif (and its underlying TCP/IP stack) and I/O driver provides their implementation.

The receiving function on the other hand gets called from the I/O driver, so that the driver's code simply calls *esp_netif_receive()* on a new data received event.

Post attach callback A final part of the network interface initialization consists of attaching the esp-netif instance to the I/O driver, by means of calling the following API:

```
esp_err_t esp_netif_attach(esp_netif_t *esp_netif, esp_netif_iodriver_handle␣
↪driver_handle);
```

It is assumed that the `esp_netif_iodriver_handle` is a pointer to driver's object, a struct derived from `struct esp_netif_driver_base_s`, so that the first member of I/O driver structure must be this base structure with pointers to

- post-attach function callback
- related esp-netif instance

As a consequence the I/O driver has to create an instance of the struct per below:

```
typedef struct my_netif_driver_s {
        esp_netif_driver_base_t base;           /*!< base structure reserved as␣
↪esp-netif driver */
        driver_impl             *h;             /*!< handle of driver␣
↪implementation */
    } my_netif_driver_t;
```

with actual values of `my_netif_driver_t::base.post_attach` and the actual drivers handle `my_netif_driver_t::h`. So when the *esp_netif_attach()* gets called from the initialization code, the post-attach callback from I/O driver's code gets executed to mutually register callbacks between esp-netif and I/O driver instances. Typically the driver is started as well in the post-attach callback. An example of a simple post-attach callback is outlined below:

```
static esp_err_t my_post_attach_start(esp_netif_t * esp_netif, void * args)
{
    my_netif_driver_t *driver = args;
    const esp_netif_driver_ifconfig_t driver_ifconfig = {
            .driver_free_rx_buffer = my_free_rx_buf,
            .transmit = my_transmit,
            .handle = driver->driver_impl
    };
    driver->base.netif = esp_netif;
    ESP_ERROR_CHECK(esp_netif_set_driver_config(esp_netif, &driver_ifconfig));
    my_driver_start(driver->driver_impl);
    return ESP_OK;
}
```

Default handlers I/O drivers also typically provide default definitions of lifecycle behaviour of related network interfaces based on state transitions of I/O drivers. For example *driver start -> network start*, etc. An example of such a default handler is provided below:

```
esp_err_t my_driver_netif_set_default_handlers(my_netif_driver_t *driver, esp_
↪netif_t * esp_netif)
{
    driver_set_event_handler(driver->driver_impl, esp_netif_action_start, MY_DRV_
↪EVENT_START, esp_netif);
    driver_set_event_handler(driver->driver_impl, esp_netif_action_stop, MY_DRV_
↪EVENT_STOP, esp_netif);
    return ESP_OK;
}
```

Network stack connection The packet data path functions for transmitting and freeing the rx buffer (defined in the I/O driver) are called from the esp-netif, specifically from its TCP/IP stack connecting layer. The following API reference outlines these network stack interaction with the esp-netif.

Header File

- components/esp_netif/include/esp_netif_net_stack.h

Functions

esp_netif_t *`esp_netif_get_handle_from_netif_impl`(void *dev)

Returns esp-netif handle.

Parameters `dev` –**[in]** opaque ptr to network interface of specific TCP/IP stack
Returns handle to related esp-netif instance

void *`esp_netif_get_netif_impl`(esp_netif_t *esp_netif)

Returns network stack specific implementation handle (if supported)

Note that it is not supported to acquire PPP netif impl pointer and this function will return NULL for esp_netif instances configured to PPP mode

Parameters `esp_netif` –**[in]** Handle to esp-netif instance
Returns handle to related network stack netif handle

esp_err_t `esp_netif_transmit`(esp_netif_t *esp_netif, void *data, size_t len)

Outputs packets from the TCP/IP stack to the media to be transmitted.

This function gets called from network stack to output packets to IO driver.

Parameters
- `esp_netif` –**[in]** Handle to esp-netif instance
- `data` –**[in]** Data to be transmitted
- `len` –**[in]** Length of the data frame

Returns ESP_OK on success, an error passed from the I/O driver otherwise

esp_err_t `esp_netif_transmit_wrap`(esp_netif_t *esp_netif, void *data, size_t len, void *netstack_buf)

Outputs packets from the TCP/IP stack to the media to be transmitted.

This function gets called from network stack to output packets to IO driver.

Parameters
- `esp_netif` –**[in]** Handle to esp-netif instance
- `data` –**[in]** Data to be transmitted
- `len` –**[in]** Length of the data frame
- `netstack_buf` –**[in]** net stack buffer

Returns ESP_OK on success, an error passed from the I/O driver otherwise

void `esp_netif_free_rx_buffer`(void *esp_netif, void *buffer)

Free the rx buffer allocated by the media driver.

This function gets called from network stack when the rx buffer to be freed in IO driver context, i.e. to deallocate a buffer owned by io driver (when data packets were passed to higher levels to avoid copying)

Parameters
- `esp_netif` –**[in]** Handle to esp-netif instance
- `buffer` –**[in]** Rx buffer pointer

Code examples for TCP/IP socket APIs are provided in the protocols/sockets directory of ESP-IDF examples.

The TCP/IP Adapter (legacy network interface library) has been deprecated, please consult the *TCP/IP Adapter Migration Guide* to update existing IDF applications.

2.2.5 Application Layer

Documentation for Application layer network protocols (above the IP Network layer) are provided in *Application Protocols*.

2.3 Peripherals API

2.3.1 Analog to Digital Converter (ADC)

ADC Channels

The ESP32 integrates 2 SAR (Successive Approximation Register) ADCs, supporting a total of 18 measurement channels (analog enabled pins).

These channels are supported:

ADC1:

- 8 channels: GPIO32 - GPIO39

ADC2:

- 10 channels: GPIO0, GPIO2, GPIO4, GPIO12 - GPIO15, GOIO25 - GPIO27

ADC Attenuation

Vref is the reference voltage used internally by ESP32 ADCs for measuring the input voltage. The ESP32 ADCs can measure analog voltages from 0 V to Vref. Among different chips, the Vref varies, the median is 1.1 V. In order to convert voltages larger than Vref, input voltages can be attenuated before being input to the ADCs. There are 4 available attenuation options, the higher the attenuation is, the higher the measurable input voltage could be.

Attenuation	Measurable input voltage range
`ADC_ATTEN_DB_0`	100 mV ~ 950 mV
`ADC_ATTEN_DB_2_5`	100 mV ~ 1250 mV
`ADC_ATTEN_DB_6`	150 mV ~ 1750 mV
`ADC_ATTEN_DB_11`	150 mV ~ 2450 mV

ADC Conversion

An ADC conversion is to convert the input analog voltage to a digital value. The ADC conversion results provided by the ADC driver APIs are raw data. Resolution of ESP32 ADC raw results under Single Read mode is 12-bit.

- *`adc1_get_raw()`*
- *`adc2_get_raw()`*

To calculate the voltage based on the ADC raw results, this formula can be used:

```
Vout = Dout * Vmax / Dmax        (1)
```

where:

Vout	Digital output result, standing for the voltage.
Dout	ADC raw digital reading result.
Vmax	Maximum measurable input analog voltage, see *ADC Attenuation*.
Dmax	Maximum of the output ADC raw digital reading result, which is 4095 under Single Read mode, 4095 under Continuous Read mode.

For boards with eFuse ADC calibration bits, `esp_adc_cal_raw_to_voltage()` can be used to get the calibrated conversion results. These results stand for the actual voltage (in mV). No need to transform these data via the formula (1). If ADC calibration APIs are used on boards without eFuse ADC calibration bits, warnings will be generated. See *ADC Calibration*.

ADC Limitations

Note:

- Some of the ADC2 pins are used as strapping pins (GPIO 0, 2, 15) thus cannot be used freely. Such is the case in the following official Development Kits:
- ESP32 DevKitC: GPIO 0 cannot be used due to external auto program circuits.
- ESP-WROVER-KIT: GPIO 0, 2, 4 and 15 cannot be used due to external connections for different purposes.
- Since the ADC2 module is also used by the Wi-Fi, only one of them could get the preemption when using together, which means the `adc2_get_raw()` may get blocked until Wi-Fi stops, and vice versa.

Driver Usage

Both of the ADC units support single read mode, which is suitable for low-frequency sampling operations.

Note: ADC readings from a pin not connected to any signal are random.

ADC Single Read mode The ADC should be configured before reading is taken.

- For ADC1, configure desired precision and attenuation by calling functions `adc1_config_width()` and `adc1_config_channel_atten()`.
- For ADC2, configure the attenuation by `adc2_config_channel_atten()`. The reading width of ADC2 is configured every time you take the reading.

Attenuation configuration is done per channel, see `adc1_channel_t` and `adc2_channel_t`, set as a parameter of above functions.

Then it is possible to read ADC conversion result with `adc1_get_raw()` and `adc2_get_raw()`. Reading width of ADC2 should be set as a parameter of `adc2_get_raw()` instead of in the configuration functions.

Single Read mode ADC example can be found in peripherals/adc/single_read directory of ESP-IDF examples.

It is also possible to read the internal hall effect sensor via ADC1 by calling dedicated function `hall_sensor_read()`. Note that even the hall sensor is internal to ESP32, reading from it uses channels 0 and 3 of ADC1 (GPIO 36 and 39). Do not connect anything else to these pins and do not change their configuration. Otherwise it may affect the measurement of low value signal from the sensor.

This API provides convenient way to configure ADC1 for reading from *ULP*. To do so, call function `adc1_ulp_enable()` and then set precision and attenuation as discussed above.

There is another specific function `adc_vref_to_gpio()` used to route internal reference voltage to a GPIO pin. It comes handy to calibrate ADC reading and this is discussed in section *ADC Calibration*.

Note: See *ADC Limitations* for the limitation of using ADC single read mode.

Minimizing Noise

The ESP32 ADC can be sensitive to noise leading to large discrepancies in ADC readings. Depending on the usage scenario, users may connect a bypass capacitor (e.g. a 100 nF ceramic capacitor) to the ADC input pad in use, to

minimize noise. Besides, multisampling may also be used to further mitigate the effects of noise.

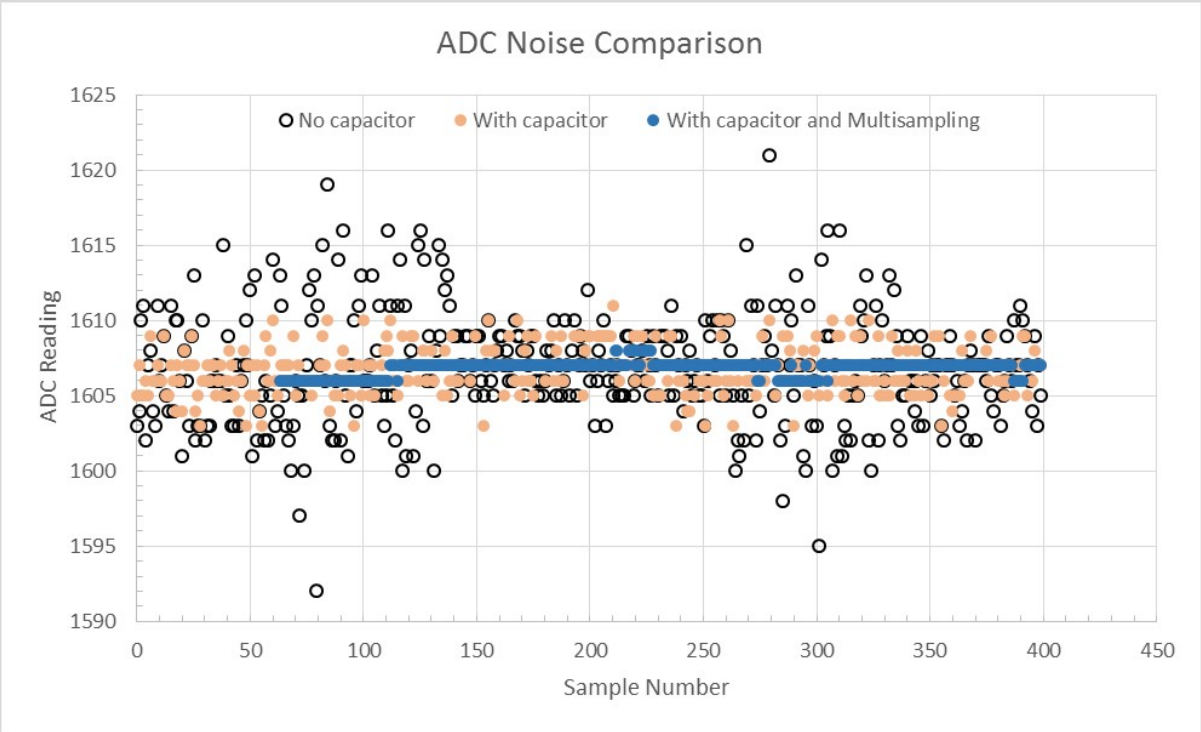

Fig. 6: Graph illustrating noise mitigation using capacitor and multisampling of 64 samples.

ADC Calibration

The esp_adc_cal/include/esp_adc_cal.h API provides functions to correct for differences in measured voltages caused by variation of ADC reference voltages (Vref) between chips. Per design the ADC reference voltage is 1100 mV, however the true reference voltage can range from 1000 mV to 1200 mV amongst different ESP32s.

Correcting ADC readings using this API involves characterizing one of the ADCs at a given attenuation to obtain a characteristics curve (ADC-Voltage curve) that takes into account the difference in ADC reference voltage. The characteristics curve is in the form of `y = coeff_a * x + coeff_b` and is used to convert ADC readings to voltages in mV. Calculation of the characteristics curve is based on calibration values which can be stored in eFuse or provided by the user.

Calibration Values Calibration values are used to generate characteristic curves that account for the variation of ADC reference voltage of a particular ESP32 chip. There are currently 3 source(s) of calibration values on ESP32. The availability of these calibration values will depend on the type and production date of the ESP32 chip/module.

- **Two Point** values represent each of the ADCs' readings at 150 mV and 850 mV. To obtain more accurate calibration results these values should be measured by user and burned into eFuse `BLOCK3`.
- **eFuse Vref** represents the true ADC reference voltage. This value is measured and burned into eFuse `BLOCK0` during factory calibration.
- **Default Vref** is an estimate of the ADC reference voltage provided by the user as a parameter during characterization. If Two Point or eFuse Vref values are unavailable, **Default Vref** will be used.

  Individual measurement and burning of the **eFuse Vref** has been applied to ESP32-D0WD and ESP32-D0WDQ6 chips produced on/after the 1st week of 2018. Such chips may be recognized by date codes on/later than 012018 (see Line 4 on figure below).

  If you would like to purchase chips or modules with calibration, double check with distributor or Espressif (sales@espressif.com) directly.

  If you are unable to check the date code (i.e. the chip may be enclosed inside a canned module, etc.), you can still verify if **eFuse Vref** is present by running the espefuse.py tool with `adc_info`

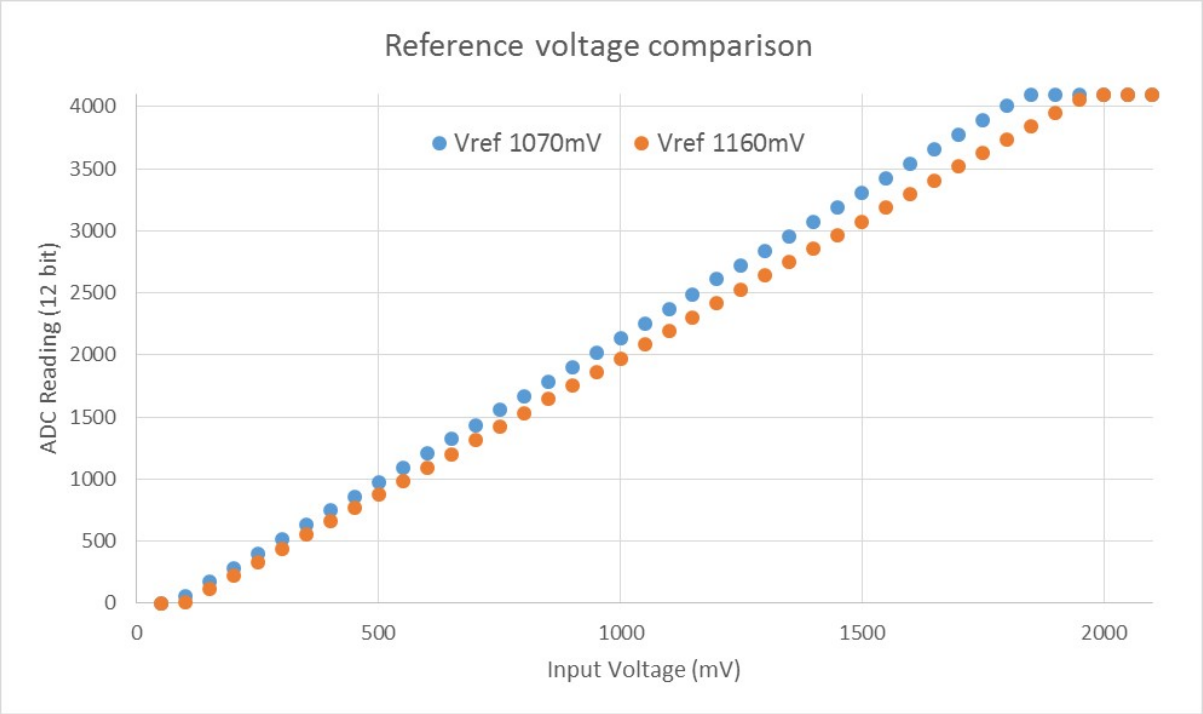

Fig. 7: Graph illustrating effect of differing reference voltages on the ADC voltage curve.

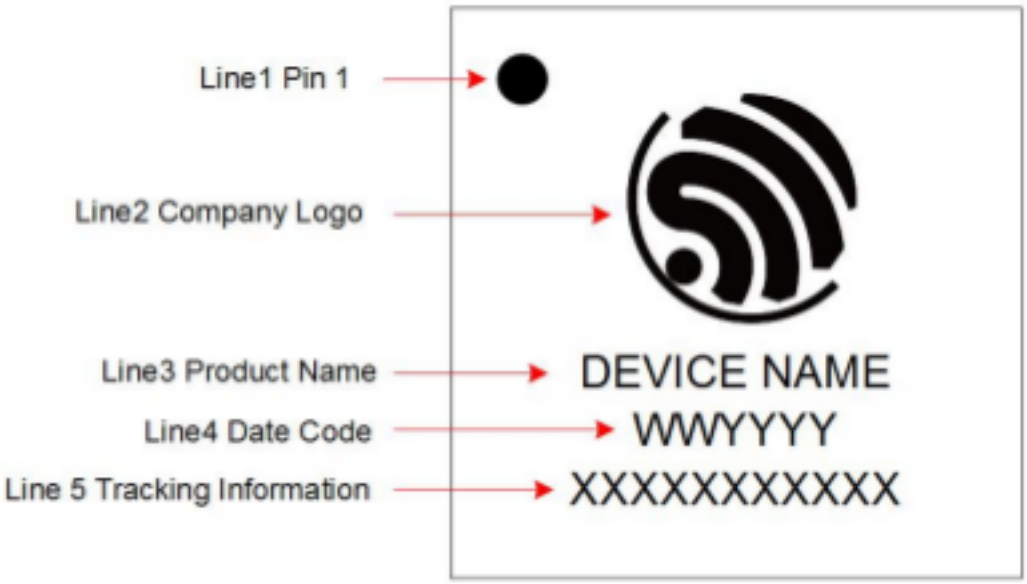

Fig. 8: ESP32 Chip Surface Marking

parameter

```
$IDF_PATH/components/esptool_py/esptool/espefuse.py --port /dev/
↪ttyUSB0 adc_info
```

Replace `/dev/ttyUSB0` with ESP32 board' s port name.
A chip that has specific **eFuse Vref** value programmed (in this case 1093 mV) will be reported as follows:

```
ADC VRef calibration: 1093 mV
```

In another example below the **eFuse Vref** is not programmed:

```
ADC VRef calibration: None (1100 mV nominal)
```

For a chip with two point calibration the message will look similar to:

```
ADC VRef calibration: 1149 mV
ADC readings stored in efuse BLK3:
    ADC1 Low reading  (150 mV): 306
    ADC1 High reading (850 mV): 3153
    ADC2 Low reading  (150 mV): 389
    ADC2 High reading (850 mV): 3206
```

Application Extensions

For a full example see esp-idf: peripherals/adc/single_read

Characterizing an ADC at a particular attenuation:

```
#include "driver/adc.h"
#include "esp_adc_cal.h"

...

    //Characterize ADC at particular atten
    esp_adc_cal_characteristics_t *adc_chars = calloc(1, sizeof(esp_adc_cal_
↪characteristics_t));
    esp_adc_cal_value_t val_type = esp_adc_cal_characterize(unit, atten, ADC_WIDTH_
↪BIT_12, DEFAULT_VREF, adc_chars);
    //Check type of calibration value used to characterize ADC
    if (val_type == ESP_ADC_CAL_VAL_EFUSE_VREF) {
        printf("eFuse Vref");
    } else if (val_type == ESP_ADC_CAL_VAL_EFUSE_TP) {
        printf("Two Point");
    } else {
        printf("Default");
    }
```

Reading an ADC then converting the reading to a voltage:

```
#include "driver/adc.h"
#include "esp_adc_cal.h"

...
    uint32_t reading =  adc1_get_raw(ADC1_CHANNEL_5);
    uint32_t voltage = esp_adc_cal_raw_to_voltage(reading, adc_chars);
```

Routing ADC reference voltage to GPIO, so it can be manually measured (for **Default Vref**):

```
#include "driver/adc.h"

...
```

(continues on next page)

(continued from previous page)

```
esp_err_t status = adc_vref_to_gpio(ADC_UNIT_1, GPIO_NUM_25);
if (status == ESP_OK) {
    printf("v_ref routed to GPIO\n");
} else {
    printf("failed to route v_ref\n");
}
```

GPIO Lookup Macros

There are macros available to specify the GPIO number of a ADC channel, or vice versa. e.g.

1. `ADC1_CHANNEL_0_GPIO_NUM` is the GPIO number of ADC1 channel 0.
2. `ADC1_GPIOn_CHANNEL` is the ADC1 channel number of GPIO n.

API Reference

This reference covers three components:

- *ADC driver*
- *ADC Calibration*
- *GPIO Lookup Macros*

ADC driver

Header File

- components/driver/include/driver/adc.h

Functions

void **adc_power_on**(void)

Enable ADC power.

Deprecated:

Use adc_power_acquire and adc_power_release instead.

void **adc_power_off**(void)

Power off SAR ADC.

Deprecated:

Use adc_power_acquire and adc_power_release instead. This function will force power down for ADC. This function is deprecated because forcing power ADC power off may disrupt operation of other components which may be using the ADC.

void **adc_power_acquire**(void)

Increment the usage counter for ADC module. ADC will stay powered on while the counter is greater than 0. Call adc_power_release when done using the ADC.

void **adc_power_release**(void)

Decrement the usage counter for ADC module. ADC will stay powered on while the counter is greater than 0. Call this function when done using the ADC.

esp_err_t **adc1_pad_get_io_num** (*adc1_channel_t* channel, *gpio_num_t* *gpio_num)

Get the GPIO number of a specific ADC1 channel.

Parameters

- **channel** –Channel to get the GPIO number
- **gpio_num** –output buffer to hold the GPIO number

Returns

- ESP_OK if success
- ESP_ERR_INVALID_ARG if channel not valid

esp_err_t **adc1_config_channel_atten** (*adc1_channel_t* channel, *adc_atten_t* atten)

Set the attenuation of a particular channel on ADC1, and configure its associated GPIO pin mux.

The default ADC voltage is for attenuation 0 dB and listed in the table below. By setting higher attenuation it is possible to read higher voltages.

Due to ADC characteristics, most accurate results are obtained within the "suggested range" shown in the following table.

SoC	attenuation (dB)	suggested range (mV)
ESP32	0	100 ~ 950
	2.5	100 ~ 1250
	6	150 ~ 1750
	11	150 ~ 2450
ESP32-S2	0	0 ~ 750
	2.5	0 ~ 1050
	6	0 ~ 1300
	11	0 ~ 2500

For maximum accuracy, use the ADC calibration APIs and measure voltages within these recommended ranges.

Note: For any given channel, this function must be called before the first time `adc1_get_raw()` is called for that channel.

Note: This function can be called multiple times to configure multiple ADC channels simultaneously. You may call `adc1_get_raw()` only after configuring a channel.

Parameters

- **channel** –ADC1 channel to configure
- **atten** –Attenuation level

Returns

- ESP_OK success
- ESP_ERR_INVALID_ARG Parameter error

esp_err_t **adc1_config_width**(*adc_bits_width_t* width_bit)

Configure ADC1 capture width, meanwhile enable output invert for ADC1. The configuration is for all channels of ADC1.

Parameters **width_bit** – Bit capture width for ADC1

Returns

- ESP_OK success
- ESP_ERR_INVALID_ARG Parameter error

int **adc1_get_raw**(*adc1_channel_t* channel)

Take an ADC1 reading from a single channel.

Note: ESP32: When the power switch of SARADC1, SARADC2, HALL sensor and AMP sensor is turned on, the input of GPIO36 and GPIO39 will be pulled down for about 80ns. When enabling power for any of these peripherals, ignore input from GPIO36 and GPIO39. Please refer to section 3.11 of 'ECO_and_Workarounds_for_Bugs_in_ESP32' for the description of this issue. As a workaround, call adc_power_acquire() in the app. This will result in higher power consumption (by ~1mA), but will remove the glitches on GPIO36 and GPIO39.

Note: Call `adc1_config_width()` before the first time this function is called.

Note: For any given channel, adc1_config_channel_atten(channel) must be called before the first time this function is called. Configuring a new channel does not prevent a previously configured channel from being read.

Parameters **channel** – ADC1 channel to read

Returns

- -1: Parameter error
- Other: ADC1 channel reading.

esp_err_t **adc_set_data_inv**(*adc_unit_t* adc_unit, bool inv_en)

Set ADC data invert.

Parameters

- **adc_unit** – ADC unit index
- **inv_en** – whether enable data invert

Returns

- ESP_OK success
- ESP_ERR_INVALID_ARG Parameter error

esp_err_t **adc_set_clk_div**(uint8_t clk_div)

Set ADC source clock.

Parameters **clk_div** – ADC clock divider, ADC clock is divided from APB clock

Returns

- ESP_OK success

esp_err_t **adc_set_data_width**(*adc_unit_t* adc_unit, *adc_bits_width_t* width_bit)

Configure ADC capture width.

Parameters

- **adc_unit** – ADC unit index
- **width_bit** – Bit capture width for ADC unit.

Returns

- ESP_OK success
- ESP_ERR_INVALID_ARG Parameter error

void **adc1_ulp_enable**(void)

Configure ADC1 to be usable by the ULP.

This function reconfigures ADC1 to be controlled by the ULP. Effect of this function can be reverted using `adc1_get_raw()` function.

Note that adc1_config_channel_atten, `adc1_config_width()` functions need to be called to configure ADC1 channels, before ADC1 is used by the ULP.

esp_err_t **adc2_pad_get_io_num**(*adc2_channel_t* channel, *gpio_num_t* *gpio_num)

Get the GPIO number of a specific ADC2 channel.

Parameters

- **channel** –Channel to get the GPIO number
- **gpio_num** –output buffer to hold the GPIO number

Returns

- ESP_OK if success
- ESP_ERR_INVALID_ARG if channel not valid

esp_err_t **adc2_config_channel_atten**(*adc2_channel_t* channel, *adc_atten_t* atten)

Configure the ADC2 channel, including setting attenuation.

The default ADC voltage is for attenuation 0 dB and listed in the table below. By setting higher attenuation it is possible to read higher voltages.

Due to ADC characteristics, most accurate results are obtained within the "suggested range" shown in the following table.

SoC	attenuation (dB)	suggested range (mV)
ESP32	0	100 ~ 950
	2.5	100 ~ 1250
	6	150 ~ 1750
	11	150 ~ 2450
ESP32-S2	0	0 ~ 750
	2.5	0 ~ 1050
	6	0 ~ 1300
	11	0 ~ 2500

For maximum accuracy, use the ADC calibration APIs and measure voltages within these recommended ranges.

Note: This function also configures the input GPIO pin mux to connect it to the ADC2 channel. It must be called before calling `adc2_get_raw()` for this channel.

Note: For any given channel, this function must be called before the first time `adc2_get_raw()` is called for that channel.

Parameters

- **channel** –ADC2 channel to configure

- **atten** –Attenuation level

Returns

- ESP_OK success
- ESP_ERR_INVALID_ARG Parameter error

esp_err_t **adc2_get_raw**(*adc2_channel_t* channel, *adc_bits_width_t* width_bit, int *raw_out)

Take an ADC2 reading on a single channel.

Note: ESP32: When the power switch of SARADC1, SARADC2, HALL sensor and AMP sensor is turned on, the input of GPIO36 and GPIO39 will be pulled down for about 80ns. When enabling power for any of these peripherals, ignore input from GPIO36 and GPIO39. Please refer to section 3.11 of 'ECO_and_Workarounds_for_Bugs_in_ESP32' for the description of this issue. As a workaround, call adc_power_acquire() in the app. This will result in higher power consumption (by ~1mA), but will remove the glitches on GPIO36 and GPIO39.

Note: ESP32: For a given channel, `adc2_config_channel_atten()` must be called before the first time this function is called. If Wi-Fi is started via `esp_wifi_start()`, this function will always fail with `ESP_ERR_TIMEOUT`.

Note: ESP32-S2: ADC2 support hardware arbiter. The arbiter is to improve the use efficiency of ADC2. After the control right is robbed by the high priority, the low priority controller will read the invalid ADC2 data. Default priority: Wi-Fi > RTC > Digital;

Parameters

- **channel** –ADC2 channel to read
- **width_bit** –Bit capture width for ADC2
- **raw_out** –the variable to hold the output data.

Returns

- ESP_OK if success
- ESP_ERR_TIMEOUT ADC2 is being used by other controller and the request timed out.
- ESP_ERR_INVALID_STATE The controller status is invalid. Please try again.

esp_err_t **adc_vref_to_gpio**(*adc_unit_t* adc_unit, *gpio_num_t* gpio)

Output ADC1 or ADC2's reference voltage to `adc2_channe_t`'s IO.

This function routes the internal reference voltage of ADCn to one of ADC2's channels. This reference voltage can then be manually measured for calibration purposes.

Note: ESP32 only supports output of ADC2's internal reference voltage.

Parameters

- **adc_unit** –**[in]** ADC unit index
- **gpio** –**[in]** GPIO number (Only ADC2's channels IO are supported)

Returns

- ESP_OK: v_ref successfully routed to selected GPIO
- ESP_ERR_INVALID_ARG: Unsupported GPIO

esp_err_t **adc2_vref_to_gpio**(*gpio_num_t* gpio)

Output ADC2 reference voltage to `adc2_channe_t`'s IO.

This function routes the internal reference voltage of ADCn to one of ADC2's channels. This reference voltage can then be manually measured for calibration purposes.

Deprecated:

Use `adc_vref_to_gpio` instead.

Parameters **`gpio`** –**[in]** GPIO number (ADC2' s channels are supported)

Returns

- ESP_OK: v_ref successfully routed to selected GPIO
- ESP_ERR_INVALID_ARG: Unsupported GPIO

esp_err_t **`adc_digi_initialize`**(const *adc_digi_init_config_t* *init_config)

Initialize the Digital ADC.

Parameters **`init_config`** –Pointer to Digital ADC initilization config. Refer to `adc_digi_init_config_t`.

Returns

- ESP_ERR_INVALID_ARG If the combination of arguments is invalid.
- ESP_ERR_NOT_FOUND No free interrupt found with the specified flags
- ESP_ERR_NO_MEM If out of memory
- ESP_OK On success

esp_err_t **`adc_digi_read_bytes`**(uint8_t *buf, uint32_t length_max, uint32_t *out_length, uint32_t timeout_ms)

Read bytes from Digital ADC through DMA.

Parameters

- **`buf`** –**[out]** Buffer to read from ADC.
- **`length_max`** –**[in]** Expected length of data read from the ADC.
- **`out_length`** –**[out]** Real length of data read from the ADC via this API.
- **`timeout_ms`** –**[in]** Time to wait for data via this API, in millisecond.

Returns

- ESP_ERR_INVALID_STATE Driver state is invalid. Usually it means the ADC sampling rate is faster than the task processing rate.
- ESP_ERR_TIMEOUT Operation timed out
- ESP_OK On success

esp_err_t **`adc_digi_start`**(void)

Start the Digital ADC and DMA peripherals. After this, the hardware starts working.

Returns

- ESP_ERR_INVALID_STATE Driver state is invalid.
- ESP_OK On success

esp_err_t **`adc_digi_stop`**(void)

Stop the Digital ADC and DMA peripherals. After this, the hardware stops working.

Returns

- ESP_ERR_INVALID_STATE Driver state is invalid.
- ESP_OK On success

esp_err_t **`adc_digi_deinitialize`**(void)

Deinitialize the Digital ADC.

Returns

- ESP_ERR_INVALID_STATE Driver state is invalid.
- ESP_OK On success

esp_err_t **`adc_digi_controller_configure`**(const *adc_digi_configuration_t* *config)

Setting the digital controller.

Parameters **`config`** –Pointer to digital controller paramter. Refer to `adc_digi_config_t`.

Returns

- ESP_ERR_INVALID_STATE Driver state is invalid.
- ESP_ERR_INVALID_ARG If the combination of arguments is invalid.
- ESP_OK On success

int **hall_sensor_read**(void)

Read Hall Sensor.

Note: When the power switch of SARADC1, SARADC2, HALL sensor and AMP sensor is turned on, the input of GPIO36 and GPIO39 will be pulled down for about 80ns. When enabling power for any of these peripherals, ignore input from GPIO36 and GPIO39. Please refer to section 3.11 of 'ECO_and_Workarounds_for_Bugs_in_ESP32' for the description of this issue.

Note: The Hall Sensor uses channels 0 and 3 of ADC1. Do not configure these channels for use as ADC channels.

Note: The ADC1 module must be enabled by calling adc1_config_width() before calling hall_sensor_read(). ADC1 should be configured for 12 bit readings, as the hall sensor readings are low values and do not cover the full range of the ADC.

Returns The hall sensor reading.

esp_err_t **adc_set_i2s_data_source**(*adc_i2s_source_t* src)

Set I2S data source.

Parameters **src** –I2S DMA data source, I2S DMA can get data from digital signals or from ADC.

Returns

- ESP_OK success

esp_err_t **adc_i2s_mode_init**(*adc_unit_t* adc_unit, *adc_channel_t* channel)

Initialize I2S ADC mode.

Parameters

- **adc_unit** –ADC unit index
- **channel** –ADC channel index

Returns

- ESP_OK success
- ESP_ERR_INVALID_ARG Parameter error

Structures

struct **adc_digi_init_config_s**

ADC DMA driver configuration.

Public Members

uint32_t **max_store_buf_size**

Max length of the converted data that driver can store before they are processed.

uint32_t **conv_num_each_intr**

Bytes of data that can be converted in 1 interrupt.

uint32_t **adc1_chan_mask**

Channel list of ADC1 to be initialized.

uint32_t **adc2_chan_mask**

Channel list of ADC2 to be initialized.

struct **adc_digi_configuration_t**

ADC digital controller settings.

Public Members

bool **conv_limit_en**

To limit ADC conversion times. Conversion stops after finishing `conv_limit_num` times conversion.

uint32_t **conv_limit_num**

Set the upper limit of the number of ADC conversion triggers. Range: 1 ~ 255.

uint32_t **pattern_num**

Number of ADC channels that will be used.

adc_digi_pattern_config_t ***adc_pattern**

List of configs for each ADC channel that will be used.

uint32_t **sample_freq_hz**

The expected ADC sampling frequency in Hz. Range: 611Hz ~ 83333Hz Fs = Fd / interval / 2 Fs: sampling frequency; Fd: digital controller frequency, no larger than 5M for better performance interval: interval between 2 measurement trigger signal, the smallest interval should not be smaller than the ADC measurement period, the largest interval should not be larger than 4095

adc_digi_convert_mode_t **conv_mode**

ADC DMA conversion mode, see `adc_digi_convert_mode_t`.

adc_digi_output_format_t **format**

ADC DMA conversion output format, see `adc_digi_output_format_t`.

Macros

ADC_ATTEN_0db

ADC rtc controller attenuation option.

Note: This definitions are only for being back-compatible

ADC_ATTEN_2_5db

ADC_ATTEN_6db

ADC_ATTEN_11db

ADC_WIDTH_BIT_DEFAULT

The default (max) bit width of the ADC of current version. You can also get the maximum bitwidth by `SOC_ADC_MAX_BITWIDTH` defined in soc_caps.h.

ADC_WIDTH_9Bit

ADC_WIDTH_10Bit

ADC_WIDTH_11Bit

ADC_WIDTH_12Bit

ADC_MAX_DELAY

Digital ADC DMA read max timeout value, it may make the `adc_digi_read_bytes` block forever if the OS supports.

Type Definitions

typedef struct *adc_digi_init_config_s* **adc_digi_init_config_t**

ADC DMA driver configuration.

Enumerations

enum **adc1_channel_t**

Values:

enumerator **ADC1_CHANNEL_0**

ADC1 channel 0 is GPIO36

enumerator **ADC1_CHANNEL_1**

ADC1 channel 1 is GPIO37

enumerator **ADC1_CHANNEL_2**

ADC1 channel 2 is GPIO38

enumerator **ADC1_CHANNEL_3**

ADC1 channel 3 is GPIO39

enumerator **ADC1_CHANNEL_4**

ADC1 channel 4 is GPIO32

enumerator **ADC1_CHANNEL_5**

ADC1 channel 5 is GPIO33

enumerator **ADC1_CHANNEL_6**

ADC1 channel 6 is GPIO34

enumerator **ADC1_CHANNEL_7**

ADC1 channel 7 is GPIO35

enumerator **ADC1_CHANNEL_MAX**

enum **adc2_channel_t**

Values:

enumerator **ADC2_CHANNEL_0**

ADC2 channel 0 is GPIO4 (ESP32), GPIO11 (ESP32-S2)

enumerator **ADC2_CHANNEL_1**

ADC2 channel 1 is GPIO0 (ESP32), GPIO12 (ESP32-S2)

enumerator **ADC2_CHANNEL_2**

ADC2 channel 2 is GPIO2 (ESP32), GPIO13 (ESP32-S2)

enumerator **ADC2_CHANNEL_3**

ADC2 channel 3 is GPIO15 (ESP32), GPIO14 (ESP32-S2)

enumerator **ADC2_CHANNEL_4**

ADC2 channel 4 is GPIO13 (ESP32), GPIO15 (ESP32-S2)

enumerator **ADC2_CHANNEL_5**

ADC2 channel 5 is GPIO12 (ESP32), GPIO16 (ESP32-S2)

enumerator **ADC2_CHANNEL_6**

ADC2 channel 6 is GPIO14 (ESP32), GPIO17 (ESP32-S2)

enumerator **ADC2_CHANNEL_7**

ADC2 channel 7 is GPIO27 (ESP32), GPIO18 (ESP32-S2)

enumerator **ADC2_CHANNEL_8**

ADC2 channel 8 is GPIO25 (ESP32), GPIO19 (ESP32-S2)

enumerator **ADC2_CHANNEL_9**

ADC2 channel 9 is GPIO26 (ESP32), GPIO20 (ESP32-S2)

enumerator **ADC2_CHANNEL_MAX**

enum **adc_i2s_encode_t**

ADC digital controller encode option.

Deprecated:

The ESP32-S2 doesn’t use I2S DMA. Call `adc_digi_output_format_t` instead.

Values:

enumerator **ADC_ENCODE_12BIT**

ADC to DMA data format, , [15:12]-channel [11:0]-12 bits ADC data

enumerator **ADC_ENCODE_11BIT**

ADC to DMA data format, [15]-unit, [14:11]-channel [10:0]-11 bits ADC data

enumerator **ADC_ENCODE_MAX**

Header File

- components/hal/include/hal/adc_types.h

Structures

struct **adc_digi_pattern_config_t**

ADC digital controller pattern configuration.

Public Members

uint8_t **atten**

Attenuation of this ADC channel.

uint8_t **channel**

ADC channel.

uint8_t **unit**

ADC unit.

uint8_t **bit_width**

ADC output bit width.

struct **adc_digi_output_data_t**

ADC digital controller (DMA mode) output data format. Used to analyze the acquired ADC (DMA) data.

Note: ESP32: Only `type1` is valid. ADC2 does not support DMA mode.

Note: ESP32-S2: Member `channel` can be used to judge the validity of the ADC data, because the role of the arbiter may get invalid ADC data.

Public Members

uint16_t **data**

ADC real output data info. Resolution: 12 bit.

ADC real output data info. Resolution: 11 bit.

uint16_t **channel**

ADC channel index info.

ADC channel index info. For ESP32-S2: If (channel < ADC_CHANNEL_MAX), The data is valid. If (channel > ADC_CHANNEL_MAX), The data is invalid.

struct *adc_digi_output_data_t*::[anonymous]::[anonymous] **type1**

ADC type1

uint16_t **unit**

ADC unit index info. 0: ADC1; 1: ADC2.

struct *adc_digi_output_data_t*::[anonymous]::[anonymous] **type2**

When the configured output format is 11bit. `ADC_DIGI_FORMAT_11BIT`

uint16_t **val**

Raw data value

Enumerations

enum **adc_unit_t**

ADC unit enumeration.

Note: For ADC digital controller (DMA mode), ESP32 doesn't support `ADC_UNIT_2`, `ADC_UNIT_BOTH`, `ADC_UNIT_ALTER`.

Values:

enumerator **ADC_UNIT_1**

SAR ADC 1.

enumerator **ADC_UNIT_2**

SAR ADC 2.

enumerator **ADC_UNIT_BOTH**

SAR ADC 1 and 2.

enumerator **ADC_UNIT_ALTER**

SAR ADC 1 and 2 alternative mode.

enumerator **ADC_UNIT_MAX**

enum **adc_channel_t**

ADC channels handle. See `adc1_channel_t`, `adc2_channel_t`.

Note: For ESP32 ADC1, don't use `ADC_CHANNEL_8`, `ADC_CHANNEL_9`. See `adc1_channel_t`.

Values:

enumerator **ADC_CHANNEL_0**

ADC channel

enumerator **ADC_CHANNEL_1**

ADC channel

enumerator **ADC_CHANNEL_2**

ADC channel

enumerator **ADC_CHANNEL_3**

ADC channel

enumerator **ADC_CHANNEL_4**

ADC channel

enumerator **ADC_CHANNEL_5**

ADC channel

enumerator **ADC_CHANNEL_6**

ADC channel

enumerator **ADC_CHANNEL_7**

ADC channel

enumerator **ADC_CHANNEL_8**

ADC channel

enumerator **ADC_CHANNEL_9**

ADC channel

enumerator **ADC_CHANNEL_MAX**

enum **adc_atten_t**

ADC attenuation parameter. Different parameters determine the range of the ADC. See `adc1_config_channel_atten`.

Values:

enumerator **ADC_ATTEN_DB_0**

No input attenumation, ADC can measure up to approx. 800 mV.

enumerator **ADC_ATTEN_DB_2_5**

The input voltage of ADC will be attenuated extending the range of measurement by about 2.5 dB (1.33 x)

enumerator **ADC_ATTEN_DB_6**

The input voltage of ADC will be attenuated extending the range of measurement by about 6 dB (2 x)

enumerator **ADC_ATTEN_DB_11**

The input voltage of ADC will be attenuated extending the range of measurement by about 11 dB (3.55 x)

enumerator **ADC_ATTEN_MAX**

enum **adc_bits_width_t**

ADC resolution setting option.

Note: Only used in single read mode

Values:

enumerator **ADC_WIDTH_BIT_9**

ADC capture width is 9Bit.

enumerator **ADC_WIDTH_BIT_10**

ADC capture width is 10Bit.

enumerator **ADC_WIDTH_BIT_11**

ADC capture width is 11Bit.

enumerator **ADC_WIDTH_BIT_12**

ADC capture width is 12Bit.

enumerator **ADC_WIDTH_MAX**

enum **adc_digi_convert_mode_t**

ADC digital controller (DMA mode) work mode.

Values:

enumerator **ADC_CONV_SINGLE_UNIT_1**

Only use ADC1 for conversion.

enumerator **ADC_CONV_SINGLE_UNIT_2**

Only use ADC2 for conversion.

enumerator **ADC_CONV_BOTH_UNIT**

Use Both ADC1 and ADC2 for conversion simultaneously.

enumerator **ADC_CONV_ALTER_UNIT**

Use both ADC1 and ADC2 for conversion by turn. e.g. ADC1 -> ADC2 -> ADC1 -> ADC2 ⋯..

enumerator **ADC_CONV_UNIT_MAX**

enum **adc_digi_output_format_t**

ADC digital controller (DMA mode) output data format option.

Values:

enumerator **ADC_DIGI_FORMAT_12BIT**

ADC to DMA data format, [15:12]-channel, [11: 0]-12 bits ADC data (*adc_digi_output_data_t*). Note: For single convert mode.

enumerator **ADC_DIGI_FORMAT_11BIT**

ADC to DMA data format, [15]-adc unit, [14:11]-channel, [10: 0]-11 bits ADC data (*adc_digi_output_data_t*). Note: For multi or alter convert mode.

enumerator **ADC_DIGI_FORMAT_MAX**

enumerator **ADC_DIGI_OUTPUT_FORMAT_TYPE1**

See *adc_digi_output_data_t.type1*

enumerator **ADC_DIGI_OUTPUT_FORMAT_TYPE2**

See *adc_digi_output_data_t.type2*

enum **adc_i2s_source_t**

ESP32 ADC DMA source selection.

Values:

enumerator **ADC_I2S_DATA_SRC_IO_SIG**

I2S data from GPIO matrix signal

enumerator **ADC_I2S_DATA_SRC_ADC**

I2S data from ADC

enumerator **ADC_I2S_DATA_SRC_MAX**

ADC Calibration

Header File

- components/esp_adc_cal/include/esp_adc_cal.h

Functions

esp_err_t **esp_adc_cal_check_efuse**(*esp_adc_cal_value_t* value_type)

Checks if ADC calibration values are burned into eFuse.

This function checks if ADC reference voltage or Two Point values have been burned to the eFuse of the current ESP32

Note: in ESP32S2, only ESP_ADC_CAL_VAL_EFUSE_TP is supported. Some old ESP32S2s do not support this, either. In which case you have to calibrate it manually, possibly by performing your own two-point calibration on the chip.

Parameters **value_type** – Type of calibration value (ESP_ADC_CAL_VAL_EFUSE_VREF or ESP_ADC_CAL_VAL_EFUSE_TP)

Returns

- ESP_OK: The calibration mode is supported in eFuse
- ESP_ERR_NOT_SUPPORTED: Error, eFuse values are not burned
- ESP_ERR_INVALID_ARG: Error, invalid argument (ESP_ADC_CAL_VAL_DEFAULT_VREF)

esp_adc_cal_value_t **esp_adc_cal_characterize**(*adc_unit_t* adc_num, *adc_atten_t* atten, *adc_bits_width_t* bit_width, uint32_t default_vref, *esp_adc_cal_characteristics_t* *chars)

Characterize an ADC at a particular attenuation.

This function will characterize the ADC at a particular attenuation and generate the ADC-Voltage curve in the form of [y = coeff_a * x + coeff_b]. Characterization can be based on Two Point values, eFuse Vref, or default Vref and the calibration values will be prioritized in that order.

Note: For ESP32, Two Point values and eFuse Vref calibration can be enabled/disabled using menuconfig. For ESP32s2, only Two Point values calibration and only ADC_WIDTH_BIT_13 is supported. The parameter default_vref is unused.

Parameters

- **adc_num** –**[in]** ADC to characterize (ADC_UNIT_1 or ADC_UNIT_2)
- **atten** –**[in]** Attenuation to characterize
- **bit_width** –**[in]** Bit width configuration of ADC
- **default_vref** –**[in]** Default ADC reference voltage in mV (Only in ESP32, used if eFuse values is not available)
- **chars** –**[out]** Pointer to empty structure used to store ADC characteristics

Returns

- ESP_ADC_CAL_VAL_EFUSE_VREF: eFuse Vref used for characterization
- ESP_ADC_CAL_VAL_EFUSE_TP: Two Point value used for characterization (only in Linear Mode)
- ESP_ADC_CAL_VAL_DEFAULT_VREF: Default Vref used for characterization

uint32_t **esp_adc_cal_raw_to_voltage**(uint32_t adc_reading, const *esp_adc_cal_characteristics_t* *chars)

Convert an ADC reading to voltage in mV.

This function converts an ADC reading to a voltage in mV based on the ADC' s characteristics.

Note: Characteristics structure must be initialized before this function is called (call esp_adc_cal_characterize())

Parameters

- **adc_reading** –**[in]** ADC reading
- **chars** –**[in]** Pointer to initialized structure containing ADC characteristics

Returns Voltage in mV

esp_err_t **esp_adc_cal_get_voltage**(*adc_channel_t* channel, const *esp_adc_cal_characteristics_t* *chars, uint32_t *voltage)

Reads an ADC and converts the reading to a voltage in mV.

This function reads an ADC then converts the raw reading to a voltage in mV based on the characteristics provided. The ADC that is read is also determined by the characteristics.

Note: The Characteristics structure must be initialized before this function is called (call esp_adc_cal_characterize())

Parameters

- **channel** –**[in]** ADC Channel to read
- **chars** –**[in]** Pointer to initialized ADC characteristics structure
- **voltage** –**[out]** Pointer to store converted voltage

Returns

- ESP_OK: ADC read and converted to mV
- ESP_ERR_INVALID_ARG: Error due to invalid arguments
- ESP_ERR_INVALID_STATE: Reading result is invalid. Try to read again.

Structures

struct **esp_adc_cal_characteristics_t**

Structure storing characteristics of an ADC.

Note: Call esp_adc_cal_characterize() to initialize the structure

---

Public Members

adc_unit_t **adc_num**

ADC number

adc_atten_t **atten**

ADC attenuation

adc_bits_width_t **bit_width**

ADC bit width

uint32_t **coeff_a**

Gradient of ADC-Voltage curve

uint32_t **coeff_b**

Offset of ADC-Voltage curve

uint32_t **vref**

Vref used by lookup table

const uint32_t ***low_curve**

Pointer to low Vref curve of lookup table (NULL if unused)

const uint32_t ***high_curve**

Pointer to high Vref curve of lookup table (NULL if unused)

uint8_t **version**

ADC Calibration

Enumerations

enum **esp_adc_cal_value_t**

Type of calibration value used in characterization.

Values:

enumerator **ESP_ADC_CAL_VAL_EFUSE_VREF**

Characterization based on reference voltage stored in eFuse

enumerator **ESP_ADC_CAL_VAL_EFUSE_TP**

Characterization based on Two Point values stored in eFuse

enumerator **ESP_ADC_CAL_VAL_DEFAULT_VREF**

Characterization based on default reference voltage

enumerator **ESP_ADC_CAL_VAL_EFUSE_TP_FIT**

Characterization based on Two Point values and fitting curve coefficients stored in eFuse

enumerator **ESP_ADC_CAL_VAL_MAX**

enumerator **ESP_ADC_CAL_VAL_NOT_SUPPORTED**

GPIO Lookup Macros

Header File

- components/soc/esp32/include/soc/adc_channel.h

Macros

ADC1_GPIO36_CHANNEL

ADC1_CHANNEL_0_GPIO_NUM

ADC1_GPIO37_CHANNEL

ADC1_CHANNEL_1_GPIO_NUM

ADC1_GPIO38_CHANNEL

ADC1_CHANNEL_2_GPIO_NUM

ADC1_GPIO39_CHANNEL

ADC1_CHANNEL_3_GPIO_NUM

ADC1_GPIO32_CHANNEL

ADC1_CHANNEL_4_GPIO_NUM

ADC1_GPIO33_CHANNEL

ADC1_CHANNEL_5_GPIO_NUM

ADC1_GPIO34_CHANNEL

ADC1_CHANNEL_6_GPIO_NUM

ADC1_GPIO35_CHANNEL

ADC1_CHANNEL_7_GPIO_NUM

ADC2_GPIO4_CHANNEL

ADC2_CHANNEL_0_GPIO_NUM

ADC2_GPIO0_CHANNEL

ADC2_CHANNEL_1_GPIO_NUM

ADC2_GPIO2_CHANNEL

ADC2_CHANNEL_2_GPIO_NUM

ADC2_GPIO15_CHANNEL

ADC2_CHANNEL_3_GPIO_NUM

ADC2_GPIO13_CHANNEL

ADC2_CHANNEL_4_GPIO_NUM

ADC2_GPIO12_CHANNEL

ADC2_CHANNEL_5_GPIO_NUM

ADC2_GPIO14_CHANNEL

ADC2_CHANNEL_6_GPIO_NUM

ADC2_GPIO27_CHANNEL

ADC2_CHANNEL_7_GPIO_NUM

ADC2_GPIO25_CHANNEL

ADC2_CHANNEL_8_GPIO_NUM

ADC2_GPIO26_CHANNEL

ADC2_CHANNEL_9_GPIO_NUM

2.3.2 Digital To Analog Converter (DAC)

Overview

ESP32 has two 8-bit DAC (digital to analog converter) channels, connected to GPIO25 (Channel 1) and GPIO26 (Channel 2).

The DAC driver allows these channels to be set to arbitrary voltages.

The DAC channels can also be driven with DMA-style written sample data by the digital controller, via the *I2S driver* when using the "built-in DAC mode".

For other analog output options, see the *Sigma-delta Modulation module* and the *LED Control module*. Both these modules produce high frequency PWM output, which can be hardware low-pass filtered in order to generate a lower frequency analog output.

Application Example

Setting DAC channel 1 (GPIO25) voltage to approx 0.78 of VDD_A voltage (VDD * 200 / 255). For VDD_A 3.3V, this is 2.59V.

```
#include <driver/dac.h>

...

dac_output_enable(DAC_CHANNEL_1);
dac_output_voltage(DAC_CHANNEL_1, 200);
```

API Reference

Header File

- components/driver/esp32/include/driver/dac.h

Functions

esp_err_t **dac_i2s_enable**(void)

Enable DAC output data from I2S.

Returns

- ESP_OK success

esp_err_t **dac_i2s_disable**(void)

Disable DAC output data from I2S.

Returns

- ESP_OK success

Header File

- components/driver/include/driver/dac_common.h

Functions

esp_err_t **dac_pad_get_io_num**(*dac_channel_t* channel, *gpio_num_t* *gpio_num)

Get the GPIO number of a specific DAC channel.

Parameters
- **channel** –Channel to get the gpio number
- **gpio_num** –output buffer to hold the gpio number

Returns
- ESP_OK if success

esp_err_t **dac_output_voltage**(*dac_channel_t* channel, uint8_t dac_value)

Set DAC output voltage. DAC output is 8-bit. Maximum (255) corresponds to VDD3P3_RTC.

Note: Need to configure DAC pad before calling this function. DAC channel 1 is attached to GPIO25, DAC channel 2 is attached to GPIO26

Parameters
- **channel** –DAC channel
- **dac_value** –DAC output value

Returns
- ESP_OK success

esp_err_t **dac_output_enable**(*dac_channel_t* channel)

DAC pad output enable.

Note: DAC channel 1 is attached to GPIO25, DAC channel 2 is attached to GPIO26 I2S left channel will be mapped to DAC channel 2 I2S right channel will be mapped to DAC channel 1

Parameters **channel** –DAC channel

esp_err_t **dac_output_disable**(*dac_channel_t* channel)

DAC pad output disable.

Note: DAC channel 1 is attached to GPIO25, DAC channel 2 is attached to GPIO26

Parameters **channel** –DAC channel

Returns
- ESP_OK success

esp_err_t **dac_cw_generator_enable**(void)

Enable cosine wave generator output.

Returns
- ESP_OK success

esp_err_t **dac_cw_generator_disable**(void)

Disable cosine wave generator output.

Returns
- ESP_OK success

esp_err_t **dac_cw_generator_config**(*dac_cw_config_t* *cw)

Config the cosine wave generator function in DAC module.

Parameters **cw** –Configuration.

Returns

- ESP_OK success
- ESP_ERR_INVALID_ARG The parameter is NULL.

GPIO Lookup Macros Some useful macros can be used to specified the GPIO number of a DAC channel, or vice versa. e.g.

1. `DAC_CHANNEL_1_GPIO_NUM` is the GPIO number of channel 1 (GPIO25);
2. `DAC_GPIO26_CHANNEL` is the channel number of GPIO 26 (channel 2).

Header File

- components/soc/esp32/include/soc/dac_channel.h

Macros

DAC_GPIO25_CHANNEL

DAC_CHANNEL_1_GPIO_NUM

DAC_GPIO26_CHANNEL

DAC_CHANNEL_2_GPIO_NUM

Header File

- components/hal/include/hal/dac_types.h

Structures

struct **dac_cw_config_t**

Config the cosine wave generator function in DAC module.

Public Members

dac_channel_t **en_ch**

Enable the cosine wave generator of DAC channel.

dac_cw_scale_t **scale**

Set the amplitude of the cosine wave generator output.

dac_cw_phase_t **phase**

Set the phase of the cosine wave generator output.

uint32_t **freq**

Set frequency of cosine wave generator output. Range: 130(130Hz) ~ 55000(100KHz).

int8_t **offset**

Set the voltage value of the DC component of the cosine wave generator output. Note: Unreasonable settings can cause waveform to be oversaturated. Range: -128 ~ 127.

Enumerations

enum **dac_channel_t**

Values:

enumerator **DAC_CHANNEL_1**

DAC channel 1 is GPIO25(ESP32) / GPIO17(ESP32S2)

enumerator **DAC_CHANNEL_2**

DAC channel 2 is GPIO26(ESP32) / GPIO18(ESP32S2)

enumerator **DAC_CHANNEL_MAX**

enum **dac_cw_scale_t**

The multiple of the amplitude of the cosine wave generator. The max amplitude is VDD3P3_RTC.

Values:

enumerator **DAC_CW_SCALE_1**

1/1. Default.

enumerator **DAC_CW_SCALE_2**

1/2.

enumerator **DAC_CW_SCALE_4**

1/4.

enumerator **DAC_CW_SCALE_8**

1/8.

enum **dac_cw_phase_t**

Set the phase of the cosine wave generator output.

Values:

enumerator **DAC_CW_PHASE_0**

Phase shift +0°

enumerator **DAC_CW_PHASE_180**

Phase shift +180°

2.3.3 General Purpose Timer

Introduction

The ESP32 chip contains two hardware timer groups. Each group has two general-purpose hardware timer(s). They are all 64-bit generic timers based on 16-bit pre-scalers and 64-bit up / down counters which are capable of being auto-reloaded.

Functional Overview

The following sections of this document cover the typical steps to configure and operate a timer:

- *Timer Initialization* - covers which parameters should be set up to get the timer working, and also what specific functionality is provided depending on the timer configuration.
- *Timer Control* - describes how to read a timer's value, pause or start a timer, and change how it operates.
- *Alarms* - shows how to set and use alarms.
- *Interrupts*- explains how to use interrupt callbacks.

Timer Initialization The two ESP32 timer groups, with two timer(s) in each, provide the total of four individual timers for use. An ESP32 timer group should be identified using `timer_group_t`. An individual timer in a group should be identified with `timer_idx_t`.

First of all, the timer should be initialized by calling the function `timer_init()` and passing a structure `timer_config_t` to it to define how the timer should operate. In particular, the following timer parameters can be set:

- **Divider**: Sets how quickly the timer's counter is "ticking". The setting `divider` is used as a divisor of the clock source that by default is APB_CLK running at 80 MHz. For more information of APB_CLK frequency, please check *ESP32 Technical Reference Manual* > *Reset and Clock* [PDF] chapter for more details.
- **Mode**: Sets if the counter should be incrementing or decrementing. It can be defined using `counter_dir` by selecting one of the values from `timer_count_dir_t`.
- **Counter Enable**: If the counter is enabled, it will start incrementing / decrementing immediately after calling `timer_init()`. You can change the behavior with `counter_en` by selecting one of the values from `timer_start_t`.
- **Alarm Enable**: Can be set using `alarm_en`.
- **Auto Reload**: Sets if the counter should `auto_reload` the initial counter value on the timer's alarm or continue incrementing or decrementing.

To get the current values of the timer's settings, use the function `timer_get_config()`.

Timer Control Once the timer is enabled, its counter starts running. To enable the timer, call the function `timer_init()` with `counter_en` set to `true`, or call `timer_start()`. You can specify the timer's initial counter value by calling `timer_set_counter_value()`. To check the timer's current value, call `timer_get_counter_value()` or `timer_get_counter_time_sec()`.

To pause the timer at any time, call `timer_pause()`. To resume it, call `timer_start()`.

To reconfigure the timer, you can call `timer_init()`. This function is described in Section *Timer Initialization*.

You can also reconfigure the timer by using dedicated functions to change individual settings:

Setting	Dedicated Function	Description
Divider	`timer_set_divider()`	Change the rate of ticking. To avoid unpredictable results, the timer should be paused when changing the divider. If the timer is running, `timer_set_divider()` pauses it, change the setting, and start the timer again.
Mode	`timer_set_counter_mode()`	Set if the counter should be incrementing or decrementing
Auto Reload	`timer_set_auto_reload()`	Set if the initial counter value should be reloaded on the timer's alarm

Alarms To set an alarm, call the function `timer_set_alarm_value()` and then enable the alarm using `timer_set_alarm()`. The alarm can also be enabled during the timer initialization stage, when `timer_init()` is called.

After the alarm is enabled, and the timer reaches the alarm value, the following two actions can occur depending on the configuration:

- An interrupt will be triggered if previously configured. See Section *Interrupts* on how to configure interrupts.
- When `auto_reload` is enabled, the timer's counter will automatically be reloaded to start counting again from a previously configured value. This value should be set in advance with `timer_set_counter_value()`.

Note:

- If an alarm value is set and the timer has already reached this value, the alarm is triggered immediately.
- Once triggered, the alarm is disabled automatically and needs to be re-enabled to trigger again.

To check the specified alarm value, call `timer_get_alarm_value()`.

Interrupts Registration of an interrupt callback for a specific timer can be done by calling `timer_isr_callback_add()` and passing in the group ID, timer ID, callback handler and user data. The callback handler will be invoked in ISR context, so user shouldn't put any blocking API in the callback function. The benefit of using interrupt callback instead of precessing interrupt from scratch is, you don't have to deal with interrupt status check and clean stuffs, they are all addressed before the callback got run in driver's default interrupt handler.

For more information on how to use interrupts, please see the application example below.

Application Example

The 64-bit hardware timer example: peripherals/timer_group.

API Reference

Header File

- components/driver/include/driver/timer.h

Functions

esp_err_t **timer_get_counter_value**(*timer_group_t* group_num, *timer_idx_t* timer_num, uint64_t *timer_val)

Read the counter value of hardware timer.

Parameters

- **group_num** –Timer group, 0 for TIMERG0 or 1 for TIMERG1
- **timer_num** –Timer index, 0 for hw_timer[0] & 1 for hw_timer[1]
- **timer_val** –Pointer to accept timer counter value.

Returns

- ESP_OK Success
- ESP_ERR_INVALID_ARG Parameter error

esp_err_t **timer_get_counter_time_sec**(*timer_group_t* group_num, *timer_idx_t* timer_num, double *time)

Read the counter value of hardware timer, in unit of a given scale.

Parameters

- **group_num** –Timer group, 0 for TIMERG0 or 1 for TIMERG1
- **timer_num** –Timer index, 0 for hw_timer[0] & 1 for hw_timer[1]
- **time** –Pointer, type of double*, to accept timer counter value, in seconds.

Returns

- ESP_OK Success
- ESP_ERR_INVALID_ARG Parameter error

esp_err_t **timer_set_counter_value**(*timer_group_t* group_num, *timer_idx_t* timer_num, uint64_t load_val)

Set counter value to hardware timer.

Parameters
- **group_num** –Timer group, 0 for TIMERG0 or 1 for TIMERG1
- **timer_num** –Timer index, 0 for hw_timer[0] & 1 for hw_timer[1]
- **load_val** –Counter value to write to the hardware timer.

Returns
- ESP_OK Success
- ESP_ERR_INVALID_ARG Parameter error

esp_err_t **timer_start**(*timer_group_t* group_num, *timer_idx_t* timer_num)

Start the counter of hardware timer.

Parameters
- **group_num** –Timer group number, 0 for TIMERG0 or 1 for TIMERG1
- **timer_num** –Timer index, 0 for hw_timer[0] & 1 for hw_timer[1]

Returns
- ESP_OK Success
- ESP_ERR_INVALID_ARG Parameter error

esp_err_t **timer_pause**(*timer_group_t* group_num, *timer_idx_t* timer_num)

Pause the counter of hardware timer.

Parameters
- **group_num** –Timer group number, 0 for TIMERG0 or 1 for TIMERG1
- **timer_num** –Timer index, 0 for hw_timer[0] & 1 for hw_timer[1]

Returns
- ESP_OK Success
- ESP_ERR_INVALID_ARG Parameter error

esp_err_t **timer_set_counter_mode**(*timer_group_t* group_num, *timer_idx_t* timer_num, *timer_count_dir_t* counter_dir)

Set counting mode for hardware timer.

Parameters
- **group_num** –Timer group number, 0 for TIMERG0 or 1 for TIMERG1
- **timer_num** –Timer index, 0 for hw_timer[0] & 1 for hw_timer[1]
- **counter_dir** –Counting direction of timer, count-up or count-down

Returns
- ESP_OK Success
- ESP_ERR_INVALID_ARG Parameter error

esp_err_t **timer_set_auto_reload**(*timer_group_t* group_num, *timer_idx_t* timer_num, *timer_autoreload_t* reload)

Enable or disable counter reload function when alarm event occurs.

Parameters
- **group_num** –Timer group number, 0 for TIMERG0 or 1 for TIMERG1
- **timer_num** –Timer index, 0 for hw_timer[0] & 1 for hw_timer[1]
- **reload** –Counter reload mode.

Returns
- ESP_OK Success
- ESP_ERR_INVALID_ARG Parameter error

esp_err_t **timer_set_divider**(*timer_group_t* group_num, *timer_idx_t* timer_num, uint32_t divider)

Set hardware divider of the source clock to the timer group. By default, the source clock is APB clock running at 80 MHz. For more information, please check Chapter Reset and Clock in Chip Technical Reference Manual.

Parameters
- **group_num** –Timer group number, 0 for TIMERG0 or 1 for TIMERG1

- **timer_num** –Timer index, 0 for hw_timer[0] & 1 for hw_timer[1]
- **divider** –Timer clock divider value. The divider’ s range is from from 2 to 65536.

Returns

- ESP_OK Success
- ESP_ERR_INVALID_ARG Parameter error

esp_err_t **timer_set_alarm_value**(*timer_group_t* group_num, *timer_idx_t* timer_num, uint64_t alarm_value)

Set timer alarm value.

Parameters

- **group_num** –Timer group, 0 for TIMERG0 or 1 for TIMERG1
- **timer_num** –Timer index, 0 for hw_timer[0] & 1 for hw_timer[1]
- **alarm_value** –A 64-bit value to set the alarm value.

Returns

- ESP_OK Success
- ESP_ERR_INVALID_ARG Parameter error

esp_err_t **timer_get_alarm_value**(*timer_group_t* group_num, *timer_idx_t* timer_num, uint64_t *alarm_value)

Get timer alarm value.

Parameters

- **group_num** –Timer group, 0 for TIMERG0 or 1 for TIMERG1
- **timer_num** –Timer index, 0 for hw_timer[0] & 1 for hw_timer[1]
- **alarm_value** –Pointer of A 64-bit value to accept the alarm value.

Returns

- ESP_OK Success
- ESP_ERR_INVALID_ARG Parameter error

esp_err_t **timer_set_alarm**(*timer_group_t* group_num, *timer_idx_t* timer_num, *timer_alarm_t* alarm_en)

Enable or disable generation of timer alarm events.

Parameters

- **group_num** –Timer group, 0 for TIMERG0 or 1 for TIMERG1
- **timer_num** –Timer index, 0 for hw_timer[0] & 1 for hw_timer[1]
- **alarm_en** –To enable or disable timer alarm function.

Returns

- ESP_OK Success
- ESP_ERR_INVALID_ARG Parameter error

esp_err_t **timer_isr_callback_add**(*timer_group_t* group_num, *timer_idx_t* timer_num, *timer_isr_t* isr_handler, void *arg, int intr_alloc_flags)

Add ISR handle callback for the corresponding timer.

The callback should return a bool value to determine whether need to do YIELD at the end of the ISR.

If the intr_alloc_flags value ESP_INTR_FLAG_IRAM is set, the handler function must be declared with IRAM_ATTR attribute and can only call functions in IRAM or ROM. It cannot call other timer APIs.

Note: This ISR handler will be called from an ISR. This ISR handler do not need to handle interrupt status, and should be kept short. If you want to realize some specific applications or write the whole ISR, you can call timer_isr_register(…) to register ISR.

Parameters

- **group_num** –Timer group number
- **timer_num** –Timer index of timer group
- **isr_handler** –Interrupt handler function, it is a callback function.

- **arg** –Parameter for handler function
- **intr_alloc_flags** –Flags used to allocate the interrupt. One or multiple (ORred) ESP_INTR_FLAG_* values. See esp_intr_alloc.h for more info.

Returns

- ESP_OK Success
- ESP_ERR_INVALID_ARG Parameter error

esp_err_t **timer_isr_callback_remove**(*timer_group_t* group_num, *timer_idx_t* timer_num)

Remove ISR handle callback for the corresponding timer.

Parameters

- **group_num** –Timer group number
- **timer_num** –Timer index of timer group

Returns

- ESP_OK Success
- ESP_ERR_INVALID_ARG Parameter error

esp_err_t **timer_isr_register**(*timer_group_t* group_num, *timer_idx_t* timer_num, void (*fn)(void*), void *arg, int intr_alloc_flags, *timer_isr_handle_t* *handle)

Register Timer interrupt handler, the handler is an ISR. The handler will be attached to the same CPU core that this function is running on.

If the intr_alloc_flags value ESP_INTR_FLAG_IRAM is set, the handler function must be declared with IRAM_ATTR attribute and can only call functions in IRAM or ROM. It cannot call other timer APIs. Use direct register access to configure timers from inside the ISR in this case.

Note: If use this function to reigster ISR, you need to write the whole ISR. In the interrupt handler, you need to call timer_spinlock_take(..) before your handling, and call timer_spinlock_give(···) after your handling.

Parameters

- **group_num** –Timer group number
- **timer_num** –Timer index of timer group
- **fn** –Interrupt handler function.
- **arg** –Parameter for handler function
- **intr_alloc_flags** –Flags used to allocate the interrupt. One or multiple (ORred) ESP_INTR_FLAG_* values. See esp_intr_alloc.h for more info.
- **handle** –Pointer to return handle. If non-NULL, a handle for the interrupt will be returned here.

Returns

- ESP_OK Success
- ESP_ERR_INVALID_ARG Parameter error

esp_err_t **timer_init**(*timer_group_t* group_num, *timer_idx_t* timer_num, const *timer_config_t* *config)

Initializes and configure the timer.

Parameters

- **group_num** –Timer group number, 0 for TIMERG0 or 1 for TIMERG1
- **timer_num** –Timer index, 0 for hw_timer[0] & 1 for hw_timer[1]
- **config** –Pointer to timer initialization parameters.

Returns

- ESP_OK Success
- ESP_ERR_INVALID_ARG Parameter error

esp_err_t **timer_deinit**(*timer_group_t* group_num, *timer_idx_t* timer_num)

Deinitializes the timer.

Parameters

- **group_num** –Timer group number, 0 for TIMERG0 or 1 for TIMERG1
- **timer_num** –Timer index, 0 for hw_timer[0] & 1 for hw_timer[1]

Returns

- ESP_OK Success
- ESP_ERR_INVALID_ARG Parameter error

esp_err_t **timer_get_config**(*timer_group_t* group_num, *timer_idx_t* timer_num, *timer_config_t* *config)

Get timer configure value.

Parameters

- **group_num** –Timer group number, 0 for TIMERG0 or 1 for TIMERG1
- **timer_num** –Timer index, 0 for hw_timer[0] & 1 for hw_timer[1]
- **config** –Pointer of struct to accept timer parameters.

Returns

- ESP_OK Success
- ESP_ERR_INVALID_ARG Parameter error

esp_err_t **timer_group_intr_enable**(*timer_group_t* group_num, *timer_intr_t* intr_mask)

Enable timer group interrupt, by enable mask.

Parameters

- **group_num** –Timer group number, 0 for TIMERG0 or 1 for TIMERG1
- **intr_mask** –Timer interrupt enable mask.
  - TIMER_INTR_T0: t0 interrupt
  - TIMER_INTR_T1: t1 interrupt
  - TIMER_INTR_WDT: watchdog interrupt

Returns

- ESP_OK Success
- ESP_ERR_INVALID_ARG Parameter error

esp_err_t **timer_group_intr_disable**(*timer_group_t* group_num, *timer_intr_t* intr_mask)

Disable timer group interrupt, by disable mask.

Parameters

- **group_num** –Timer group number, 0 for TIMERG0 or 1 for TIMERG1
- **intr_mask** –Timer interrupt disable mask.
  - TIMER_INTR_T0: t0 interrupt
  - TIMER_INTR_T1: t1 interrupt
  - TIMER_INTR_WDT: watchdog interrupt

Returns

- ESP_OK Success
- ESP_ERR_INVALID_ARG Parameter error

esp_err_t **timer_enable_intr**(*timer_group_t* group_num, *timer_idx_t* timer_num)

Enable timer interrupt.

Parameters

- **group_num** –Timer group number, 0 for TIMERG0 or 1 for TIMERG1
- **timer_num** –Timer index.

Returns

- ESP_OK Success
- ESP_ERR_INVALID_ARG Parameter error

esp_err_t **timer_disable_intr**(*timer_group_t* group_num, *timer_idx_t* timer_num)

Disable timer interrupt.

Parameters

- **group_num** –Timer group number, 0 for TIMERG0 or 1 for TIMERG1
- **timer_num** –Timer index.

Returns

- ESP_OK Success
- ESP_ERR_INVALID_ARG Parameter error

void **timer_group_intr_clr_in_isr**(*timer_group_t* group_num, *timer_idx_t* timer_num)

Clear timer interrupt status, just used in ISR.

Parameters
- **group_num** –Timer group number, 0 for TIMERG0 or 1 for TIMERG1
- **timer_num** –Timer index.

void **timer_group_clr_intr_status_in_isr**(*timer_group_t* group_num, *timer_idx_t* timer_num)

Clear timer interrupt status, just used in ISR.

Parameters
- **group_num** –Timer group number, 0 for TIMERG0 or 1 for TIMERG1
- **timer_num** –Timer index.

void **timer_group_enable_alarm_in_isr**(*timer_group_t* group_num, *timer_idx_t* timer_num)

Enable alarm interrupt, just used in ISR.

Parameters
- **group_num** –Timer group number, 0 for TIMERG0 or 1 for TIMERG1
- **timer_num** –Timer index.

uint64_t **timer_group_get_counter_value_in_isr**(*timer_group_t* group_num, *timer_idx_t* timer_num)

Get the current counter value, just used in ISR.

Parameters
- **group_num** –Timer group number, 0 for TIMERG0 or 1 for TIMERG1
- **timer_num** –Timer index.

Returns
- Counter value

void **timer_group_set_alarm_value_in_isr**(*timer_group_t* group_num, *timer_idx_t* timer_num, uint64_t alarm_val)

Set the alarm threshold for the timer, just used in ISR.

Parameters
- **group_num** –Timer group number, 0 for TIMERG0 or 1 for TIMERG1
- **timer_num** –Timer index.
- **alarm_val** –Alarm threshold.

void **timer_group_set_counter_enable_in_isr**(*timer_group_t* group_num, *timer_idx_t* timer_num, *timer_start_t* counter_en)

Enable/disable a counter, just used in ISR.

Parameters
- **group_num** –Timer group number, 0 for TIMERG0 or 1 for TIMERG1
- **timer_num** –Timer index.
- **counter_en** –Enable/disable.

timer_intr_t **timer_group_intr_get_in_isr**(*timer_group_t* group_num)

Get the masked interrupt status, just used in ISR.

Parameters **group_num** –Timer group number, 0 for TIMERG0 or 1 for TIMERG1

Returns
- Interrupt status

uint32_t **timer_group_get_intr_status_in_isr**(*timer_group_t* group_num)

Get interrupt status, just used in ISR.

Parameters **group_num** –Timer group number, 0 for TIMERG0 or 1 for TIMERG1

Returns
- Interrupt status

void **timer_group_clr_intr_sta_in_isr**(*timer_group_t* group_num, *timer_intr_t* intr_mask)

Clear the masked interrupt status, just used in ISR.

Parameters
- **group_num** –Timer group number, 0 for TIMERG0 or 1 for TIMERG1
- **intr_mask** –Masked interrupt.

bool **timer_group_get_auto_reload_in_isr**(*timer_group_t* group_num, *timer_idx_t* timer_num)

Get auto reload enable status, just used in ISR.

Parameters
- **group_num** –Timer group number, 0 for TIMERG0 or 1 for TIMERG1
- **timer_num** –Timer index

Returns
- True Auto reload enabled
- False Auto reload disabled

esp_err_t **timer_spinlock_take**(*timer_group_t* group_num)

Take timer spinlock to enter critical protect.

Note: Deprecated, the recommended way is to use ISR callbacks instead, see timer_group_example_main

---

Parameters **group_num** –Timer group number, 0 for TIMERG0 or 1 for TIMERG1

Returns
- ESP_OK Success
- ESP_ERR_INVALID_ARG Parameter error

esp_err_t **timer_spinlock_give**(*timer_group_t* group_num)

Give timer spinlock to exit critical protect.

Note: Deprecated, the recommended way is to use ISR callbacks instead, see timer_group_example_main

---

Parameters **group_num** –Timer group number, 0 for TIMERG0 or 1 for TIMERG1

Returns
- ESP_OK Success
- ESP_ERR_INVALID_ARG Parameter error

Macros

TIMER_BASE_CLK

Frequency of the clock on the input of the timer groups

Type Definitions

typedef bool (***timer_isr_t**)(void*)

Interrupt handle callback function. User need to retrun a bool value in callback.

Note: If you called FreeRTOS functions in callback, you need to return true or false based on the retrun value of argument `pxHigherPriorityTaskWoken`. For example, `xQueueSendFromISR` is called in callback, if the return value `pxHigherPriorityTaskWoken` of any FreeRTOS calls is pdTRUE, return true; otherwise return false.

Return

- True Do task yield at the end of ISR
- False Not do task yield at the end of ISR

typedef *intr_handle_t* **timer_isr_handle_t**

Interrupt handle, used in order to free the isr after use. Aliases to an int handle for now.

Header File

- components/hal/include/hal/timer_types.h

Structures

struct **timer_config_t**

Data structure with timer's configuration settings.

Public Members

timer_alarm_t **alarm_en**

Timer alarm enable

timer_start_t **counter_en**

Counter enable

timer_intr_mode_t **intr_type**

Interrupt mode

timer_count_dir_t **counter_dir**

Counter direction

timer_autoreload_t **auto_reload**

Timer auto-reload

uint32_t **divider**

Counter clock divider. The divider's range is from from 2 to 65536.

Enumerations

enum **timer_group_t**

Selects a Timer-Group out of 2 available groups.

Values:

enumerator **TIMER_GROUP_0**

Hw timer group 0

enumerator **TIMER_GROUP_1**

Hw timer group 1

enumerator **TIMER_GROUP_MAX**

enum **timer_idx_t**

Select a hardware timer from timer groups.

Values:

enumerator **TIMER_0**

Select timer0 of GROUPx

enumerator **TIMER_1**

Select timer1 of GROUPx

enumerator **TIMER_MAX**

enum **timer_count_dir_t**

Decides the direction of counter.

Values:

enumerator **TIMER_COUNT_DOWN**

Descending Count from cnt.high|cnt.low

enumerator **TIMER_COUNT_UP**

Ascending Count from Zero

enumerator **TIMER_COUNT_MAX**

enum **timer_start_t**

Decides whether timer is on or paused.

Values:

enumerator **TIMER_PAUSE**

Pause timer counter

enumerator **TIMER_START**

Start timer counter

enum **timer_intr_t**

Interrupt types of the timer.

Values:

enumerator **TIMER_INTR_T0**

interrupt of timer 0

enumerator **TIMER_INTR_T1**

interrupt of timer 1

enumerator **TIMER_INTR_WDT**

interrupt of watchdog

enumerator **TIMER_INTR_NONE**

enum **timer_alarm_t**

Decides whether to enable alarm mode.

Values:

enumerator **TIMER_ALARM_DIS**

Disable timer alarm

enumerator **TIMER_ALARM_EN**

Enable timer alarm

enumerator **TIMER_ALARM_MAX**

enum **timer_intr_mode_t**

Select interrupt type if running in alarm mode.

Values:

enumerator **TIMER_INTR_LEVEL**

Interrupt mode: level mode

enumerator **TIMER_INTR_MAX**

enum **timer_autoreload_t**

Select if Alarm needs to be loaded by software or automatically reload by hardware.

Values:

enumerator **TIMER_AUTORELOAD_DIS**

Disable auto-reload: hardware will not load counter value after an alarm event

enumerator **TIMER_AUTORELOAD_EN**

Enable auto-reload: hardware will load counter value after an alarm event

enumerator **TIMER_AUTORELOAD_MAX**

2.3.4 GPIO & RTC GPIO

Overview

The ESP32 chip features 34 physical GPIO pads. Some GPIO pads cannot be used or do not have the corresponding pin on the chip package. For more details, see *ESP32 Technical Reference Manual > IO MUX and GPIO Matrix (GPIO, IO_MUX)* [PDF].

Each pad can be used as a general purpose I/O or can be connected to an internal peripheral signal. The table below provides more information on pin usage, and please note the comments in the table for GPIOs with restrictions.

GPIO	Analog Function	RTC GPIO	Comments
GPIO0	ADC2_CH1	RTC_GPIO11	Strapping pin
GPIO1			TXD
GPIO2	ADC2_CH2	RTC_GPIO12	Strapping pin
GPIO3			RXD
GPIO4	ADC2_CH0	RTC_GPIO10	
GPIO5			Strapping pin
GPIO6			SPI0/1
GPIO7			SPI0/1
GPIO8			SPI0/1
GPIO9			SPI0/1
GPIO10			SPI0/1
GPIO11			SPI0/1
GPIO12	ADC2_CH5	RTC_GPIO15	Strapping pin; JTAG
GPIO13	ADC2_CH4	RTC_GPIO14	JTAG
GPIO14	ADC2_CH6	RTC_GPIO16	JTAG
GPIO15	ADC2_CH3	RTC_GPIO13	Strapping pin; JTAG
GPIO16			SPI0/1
GPIO17			SPI0/1
GPIO18			
GPIO19			
GPIO20			This pin is only available on ESP32-PICO-V3 chip package
GPIO21			
GPIO22			
GPIO23			
GPIO25	ADC2_CH8	RTC_GPIO6	
GPIO26	ADC2_CH9	RTC_GPIO7	
GPIO27	ADC2_CH7	RTC_GPIO17	
GPIO32	ADC1_CH4	RTC_GPIO9	
GPIO33	ADC1_CH5	RTC_GPIO8	
GPIO34	ADC1_CH6	RTC_GPIO4	GPI
GPIO35	ADC1_CH7	RTC_GPIO5	GPI
GPIO36	ADC1_CH0	RTC_GPIO0	GPI
GPIO37	ADC1_CH1	RTC_GPIO1	GPI
GPIO38	ADC1_CH2	RTC_GPIO2	GPI
GPIO39	ADC1_CH3	RTC_GPIO3	GPI

Note:

- Strapping pin: GPIO0, GPIO2, GPIO5, GPIO12 (MTDI), and GPIO15 (MTDO) are strapping pins. For more infomation, please refer to ESP32 datasheet.
- SPI0/1: GPIO6-11 and GPIO16-17 are usually connected to the SPI flash and PSRAM integrated on the module and therefore should not be used for other purposes.
- JTAG: GPIO12-15 are usually used for inline debug.
- GPI: GPIO34-39 can only be set as input mode and do not have software-enabled pullup or pulldown functions.
- TXD & RXD are usually used for flashing and debugging.
- ADC2: ADC2 pins cannot be used when Wi-Fi is used. So, if you ' re using Wi-Fi and you ' re having trouble getting the value from an ADC2 GPIO, you may consider using an ADC1 GPIO instead, that should solve your problem. For more details, please refer to ADC limitations.

There is also separate "RTC GPIO" support, which functions when GPIOs are routed to the "RTC" low-power and analog subsystem. These pin functions can be used when:

- In deep sleep

- The *Ultra Low Power co-processor* is running
- Analog functions such as ADC/DAC/etc are in use.

Application Example

GPIO output and input interrupt example: peripherals/gpio/generic_gpio.

API Reference - Normal GPIO

Header File

- components/driver/include/driver/gpio.h

Functions

esp_err_t **gpio_config**(const *gpio_config_t* *pGPIOConfig)

GPIO common configuration.

Configure GPIO' s Mode,pull-up,PullDown,IntrType

Parameters **pGPIOConfig** –Pointer to GPIO configure struct
Returns
- ESP_OK success
- ESP_ERR_INVALID_ARG Parameter error

esp_err_t **gpio_reset_pin**(*gpio_num_t* gpio_num)

Reset an gpio to default state (select gpio function, enable pullup and disable input and output).

Note: This function also configures the IOMUX for this pin to the GPIO function, and disconnects any other peripheral output configured via GPIO Matrix.

Parameters **gpio_num** –GPIO number.
Returns Always return ESP_OK.

esp_err_t **gpio_set_intr_type**(*gpio_num_t* gpio_num, *gpio_int_type_t* intr_type)

GPIO set interrupt trigger type.

Parameters
- **gpio_num** –GPIO number. If you want to set the trigger type of e.g. of GPIO16, gpio_num should be GPIO_NUM_16 (16);
- **intr_type** –Interrupt type, select from gpio_int_type_t

Returns
- ESP_OK Success
- ESP_ERR_INVALID_ARG Parameter error

esp_err_t **gpio_intr_enable**(*gpio_num_t* gpio_num)

Enable GPIO module interrupt signal.

Note: ESP32: Please do not use the interrupt of GPIO36 and GPIO39 when using ADC or Wi-Fi and Bluetooth with sleep mode enabled. Please refer to the comments of `adc1_get_raw`. Please refer to Section 3.11 of ESP32 ECO and Workarounds for Bugs for the description of this issue. As a workaround, call adc_power_acquire() in the app. This will result in higher power consumption (by ~1mA), but will remove the glitches on GPIO36 and GPIO39.

Parameters **gpio_num** –GPIO number. If you want to enable an interrupt on e.g. GPIO16, gpio_num should be GPIO_NUM_16 (16);

Returns
- ESP_OK Success
- ESP_ERR_INVALID_ARG Parameter error

esp_err_t **gpio_intr_disable** (*gpio_num_t* gpio_num)

Disable GPIO module interrupt signal.

Parameters **gpio_num** –GPIO number. If you want to disable the interrupt of e.g. GPIO16, gpio_num should be GPIO_NUM_16 (16);

Returns
- ESP_OK success
- ESP_ERR_INVALID_ARG Parameter error

esp_err_t **gpio_set_level** (*gpio_num_t* gpio_num, uint32_t level)

GPIO set output level.

Parameters
- **gpio_num** –GPIO number. If you want to set the output level of e.g. GPIO16, gpio_num should be GPIO_NUM_16 (16);
- **level** –Output level. 0: low ; 1: high

Returns
- ESP_OK Success
- ESP_ERR_INVALID_ARG GPIO number error

int **gpio_get_level** (*gpio_num_t* gpio_num)

GPIO get input level.

Warning: If the pad is not configured for input (or input and output) the returned value is always 0.

Parameters **gpio_num** –GPIO number. If you want to get the logic level of e.g. pin GPIO16, gpio_num should be GPIO_NUM_16 (16);

Returns
- 0 the GPIO input level is 0
- 1 the GPIO input level is 1

esp_err_t **gpio_set_direction** (*gpio_num_t* gpio_num, *gpio_mode_t* mode)

GPIO set direction.

Configure GPIO direction,such as output_only,input_only,output_and_input

Parameters
- **gpio_num** –Configure GPIO pins number, it should be GPIO number. If you want to set direction of e.g. GPIO16, gpio_num should be GPIO_NUM_16 (16);
- **mode** –GPIO direction

Returns
- ESP_OK Success
- ESP_ERR_INVALID_ARG GPIO error

esp_err_t **gpio_set_pull_mode** (*gpio_num_t* gpio_num, *gpio_pull_mode_t* pull)

Configure GPIO pull-up/pull-down resistors.

Note: ESP32: Only pins that support both input & output have integrated pull-up and pull-down resistors. Input-only GPIOs 34-39 do not.

Parameters
- **gpio_num** –GPIO number. If you want to set pull up or down mode for e.g. GPIO16, gpio_num should be GPIO_NUM_16 (16);

- **pull** –GPIO pull up/down mode.

Returns

- ESP_OK Success
- ESP_ERR_INVALID_ARG : Parameter error

esp_err_t **gpio_wakeup_enable**(*gpio_num_t* gpio_num, *gpio_int_type_t* intr_type)

Enable GPIO wake-up function.

Parameters

- **gpio_num** –GPIO number.
- **intr_type** –GPIO wake-up type. Only GPIO_INTR_LOW_LEVEL or GPIO_INTR_HIGH_LEVEL can be used.

Returns

- ESP_OK Success
- ESP_ERR_INVALID_ARG Parameter error

esp_err_t **gpio_wakeup_disable**(*gpio_num_t* gpio_num)

Disable GPIO wake-up function.

Parameters **gpio_num** –GPIO number

Returns

- ESP_OK Success
- ESP_ERR_INVALID_ARG Parameter error

esp_err_t **gpio_isr_register**(void (*fn)(void*), void *arg, int intr_alloc_flags, *gpio_isr_handle_t* *handle)

Register GPIO interrupt handler, the handler is an ISR. The handler will be attached to the same CPU core that this function is running on.

This ISR function is called whenever any GPIO interrupt occurs. See the alternative gpio_install_isr_service() and gpio_isr_handler_add() API in order to have the driver support per-GPIO ISRs.

To disable or remove the ISR, pass the returned handle to the *interrupt allocation functions*.

Parameters

- **fn** –Interrupt handler function.
- **arg** –Parameter for handler function
- **intr_alloc_flags** –Flags used to allocate the interrupt. One or multiple (ORred) ESP_INTR_FLAG_* values. See esp_intr_alloc.h for more info.
- **handle** –Pointer to return handle. If non-NULL, a handle for the interrupt will be returned here.

Returns

- ESP_OK Success ;
- ESP_ERR_INVALID_ARG GPIO error
- ESP_ERR_NOT_FOUND No free interrupt found with the specified flags

esp_err_t **gpio_pullup_en**(*gpio_num_t* gpio_num)

Enable pull-up on GPIO.

Parameters **gpio_num** –GPIO number

Returns

- ESP_OK Success
- ESP_ERR_INVALID_ARG Parameter error

esp_err_t **gpio_pullup_dis**(*gpio_num_t* gpio_num)

Disable pull-up on GPIO.

Parameters **gpio_num** –GPIO number

Returns

- ESP_OK Success
- ESP_ERR_INVALID_ARG Parameter error

esp_err_t **gpio_pulldown_en**(*gpio_num_t* gpio_num)

Enable pull-down on GPIO.

Parameters **gpio_num** –GPIO number
Returns
- ESP_OK Success
- ESP_ERR_INVALID_ARG Parameter error

esp_err_t **gpio_pulldown_dis**(*gpio_num_t* gpio_num)

Disable pull-down on GPIO.

Parameters **gpio_num** –GPIO number
Returns
- ESP_OK Success
- ESP_ERR_INVALID_ARG Parameter error

esp_err_t **gpio_install_isr_service**(int intr_alloc_flags)

Install the driver's GPIO ISR handler service, which allows per-pin GPIO interrupt handlers.

This function is incompatible with gpio_isr_register() - if that function is used, a single global ISR is registered for all GPIO interrupts. If this function is used, the ISR service provides a global GPIO ISR and individual pin handlers are registered via the gpio_isr_handler_add() function.

Parameters **intr_alloc_flags** –Flags used to allocate the interrupt. One or multiple (ORred) ESP_INTR_FLAG_* values. See esp_intr_alloc.h for more info.
Returns
- ESP_OK Success
- ESP_ERR_NO_MEM No memory to install this service
- ESP_ERR_INVALID_STATE ISR service already installed.
- ESP_ERR_NOT_FOUND No free interrupt found with the specified flags
- ESP_ERR_INVALID_ARG GPIO error

void **gpio_uninstall_isr_service**(void)

Uninstall the driver's GPIO ISR service, freeing related resources.

esp_err_t **gpio_isr_handler_add**(*gpio_num_t* gpio_num, *gpio_isr_t* isr_handler, void *args)

Add ISR handler for the corresponding GPIO pin.

Call this function after using gpio_install_isr_service() to install the driver's GPIO ISR handler service.

The pin ISR handlers no longer need to be declared with IRAM_ATTR, unless you pass the ESP_INTR_FLAG_IRAM flag when allocating the ISR in gpio_install_isr_service().

This ISR handler will be called from an ISR. So there is a stack size limit (configurable as "ISR stack size" in menuconfig). This limit is smaller compared to a global GPIO interrupt handler due to the additional level of indirection.

Parameters
- **gpio_num** –GPIO number
- **isr_handler** –ISR handler function for the corresponding GPIO number.
- **args** –parameter for ISR handler.

Returns
- ESP_OK Success
- ESP_ERR_INVALID_STATE Wrong state, the ISR service has not been initialized.
- ESP_ERR_INVALID_ARG Parameter error

esp_err_t **gpio_isr_handler_remove**(*gpio_num_t* gpio_num)

Remove ISR handler for the corresponding GPIO pin.

Parameters **gpio_num** –GPIO number
Returns
- ESP_OK Success
- ESP_ERR_INVALID_STATE Wrong state, the ISR service has not been initialized.
- ESP_ERR_INVALID_ARG Parameter error

esp_err_t **gpio_set_drive_capability**(*gpio_num_t* gpio_num, *gpio_drive_cap_t* strength)

Set GPIO pad drive capability.

Parameters
- **gpio_num** –GPIO number, only support output GPIOs
- **strength** –Drive capability of the pad

Returns
- ESP_OK Success
- ESP_ERR_INVALID_ARG Parameter error

esp_err_t **gpio_get_drive_capability**(*gpio_num_t* gpio_num, *gpio_drive_cap_t* *strength)

Get GPIO pad drive capability.

Parameters
- **gpio_num** –GPIO number, only support output GPIOs
- **strength** –Pointer to accept drive capability of the pad

Returns
- ESP_OK Success
- ESP_ERR_INVALID_ARG Parameter error

esp_err_t **gpio_hold_en**(*gpio_num_t* gpio_num)

Enable gpio pad hold function.

The gpio pad hold function works in both input and output modes, but must be output-capable gpios. If pad hold enabled: in output mode: the output level of the pad will be force locked and can not be changed. in input mode: the input value read will not change, regardless the changes of input signal.

The state of digital gpio cannot be held during Deep-sleep, and it will resume the hold function when the chip wakes up from Deep-sleep. If the digital gpio also needs to be held during Deep-sleep, `gpio_deep_sleep_hold_en` should also be called.

Power down or call gpio_hold_dis will disable this function.

Parameters **gpio_num** –GPIO number, only support output-capable GPIOs

Returns
- ESP_OK Success
- ESP_ERR_NOT_SUPPORTED Not support pad hold function

esp_err_t **gpio_hold_dis**(*gpio_num_t* gpio_num)

Disable gpio pad hold function.

When the chip is woken up from Deep-sleep, the gpio will be set to the default mode, so, the gpio will output the default level if this function is called. If you don't want the level changes, the gpio should be configured to a known state before this function is called. e.g. If you hold gpio18 high during Deep-sleep, after the chip is woken up and `gpio_hold_dis` is called, gpio18 will output low level(because gpio18 is input mode by default). If you don't want this behavior, you should configure gpio18 as output mode and set it to hight level before calling `gpio_hold_dis`.

Parameters **gpio_num** –GPIO number, only support output-capable GPIOs

Returns
- ESP_OK Success
- ESP_ERR_NOT_SUPPORTED Not support pad hold function

void **gpio_deep_sleep_hold_en**(void)

Enable all digital gpio pad hold function during Deep-sleep.

When the chip is in Deep-sleep mode, all digital gpio will hold the state before sleep, and when the chip is woken up, the status of digital gpio will not be held. Note that the pad hold feature only works when the chip is in Deep-sleep mode, when not in sleep mode, the digital gpio state can be changed even you have called this function.

Power down or call gpio_hold_dis will disable this function, otherwise, the digital gpio hold feature works as long as the chip enter Deep-sleep.

void **gpio_deep_sleep_hold_dis**(void)

Disable all digital gpio pad hold function during Deep-sleep.

void **gpio_iomux_in**(uint32_t gpio_num, uint32_t signal_idx)

Set pad input to a peripheral signal through the IOMUX.

Parameters
- **gpio_num** –GPIO number of the pad.
- **signal_idx** –Peripheral signal id to input. One of the `*_IN_IDX` signals in `soc/gpio_sig_map.h`.

void **gpio_iomux_out**(uint8_t gpio_num, int func, bool oen_inv)

Set peripheral output to an GPIO pad through the IOMUX.

Parameters
- **gpio_num** –gpio_num GPIO number of the pad.
- **func** –The function number of the peripheral pin to output pin. One of the `FUNC_X_*` of specified pin (X) in `soc/io_mux_reg.h`.
- **oen_inv** –True if the output enable needs to be inverted, otherwise False.

esp_err_t **gpio_sleep_sel_en**(*gpio_num_t* gpio_num)

Enable SLP_SEL to change GPIO status automantically in lightsleep.

Parameters **gpio_num** –GPIO number of the pad.
Returns
- ESP_OK Success

esp_err_t **gpio_sleep_sel_dis**(*gpio_num_t* gpio_num)

Disable SLP_SEL to change GPIO status automantically in lightsleep.

Parameters **gpio_num** –GPIO number of the pad.
Returns
- ESP_OK Success

esp_err_t **gpio_sleep_set_direction**(*gpio_num_t* gpio_num, *gpio_mode_t* mode)

GPIO set direction at sleep.

Configure GPIO direction,such as output_only,input_only,output_and_input

Parameters
- **gpio_num** –Configure GPIO pins number, it should be GPIO number. If you want to set direction of e.g. GPIO16, gpio_num should be GPIO_NUM_16 (16);
- **mode** –GPIO direction

Returns
- ESP_OK Success
- ESP_ERR_INVALID_ARG GPIO error

esp_err_t **gpio_sleep_set_pull_mode**(*gpio_num_t* gpio_num, *gpio_pull_mode_t* pull)

Configure GPIO pull-up/pull-down resistors at sleep.

Note: ESP32: Only pins that support both input & output have integrated pull-up and pull-down resistors. Input-only GPIOs 34-39 do not.

Parameters
- **gpio_num** –GPIO number. If you want to set pull up or down mode for e.g. GPIO16, gpio_num should be GPIO_NUM_16 (16);
- **pull** –GPIO pull up/down mode.

Returns
- ESP_OK Success
- ESP_ERR_INVALID_ARG : Parameter error

Macros

GPIO_PIN_COUNT

GPIO_IS_VALID_GPIO(gpio_num)

Check whether it is a valid GPIO number.

GPIO_IS_VALID_OUTPUT_GPIO(gpio_num)

Check whether it can be a valid GPIO number of output mode.

Type Definitions

typedef *intr_handle_t* **gpio_isr_handle_t**

Header File

- components/hal/include/hal/gpio_types.h

Structures

struct **gpio_config_t**

Configuration parameters of GPIO pad for gpio_config function.

Public Members

uint64_t **pin_bit_mask**

GPIO pin: set with bit mask, each bit maps to a GPIO

gpio_mode_t **mode**

GPIO mode: set input/output mode

gpio_pullup_t **pull_up_en**

GPIO pull-up

gpio_pulldown_t **pull_down_en**

GPIO pull-down

gpio_int_type_t **intr_type**

GPIO interrupt type

Macros

GPIO_SEL_0

Pin 0 selected

GPIO_SEL_1

Pin 1 selected

GPIO_SEL_2

Pin 2 selected

GPIO_SEL_3

Pin 3 selected

GPIO_SEL_4
Pin 4 selected

GPIO_SEL_5
Pin 5 selected

GPIO_SEL_6
Pin 6 selected

GPIO_SEL_7
Pin 7 selected

GPIO_SEL_8
Pin 8 selected

GPIO_SEL_9
Pin 9 selected

GPIO_SEL_10
Pin 10 selected

GPIO_SEL_11
Pin 11 selected

GPIO_SEL_12
Pin 12 selected

GPIO_SEL_13
Pin 13 selected

GPIO_SEL_14
Pin 14 selected

GPIO_SEL_15
Pin 15 selected

GPIO_SEL_16
Pin 16 selected

GPIO_SEL_17
Pin 17 selected

GPIO_SEL_18
Pin 18 selected

GPIO_SEL_19
Pin 19 selected

GPIO_SEL_20
Pin 20 selected

GPIO_SEL_21
Pin 21 selected

GPIO_SEL_22
Pin 22 selected

GPIO_SEL_23
Pin 23 selected

GPIO_SEL_25
Pin 25 selected

GPIO_SEL_26
Pin 26 selected

GPIO_SEL_27
Pin 27 selected

GPIO_SEL_28
Pin 28 selected

GPIO_SEL_29
Pin 29 selected

GPIO_SEL_30
Pin 30 selected

GPIO_SEL_31
Pin 31 selected

GPIO_SEL_32
Pin 32 selected

GPIO_SEL_33
Pin 33 selected

GPIO_SEL_34
Pin 34 selected

GPIO_SEL_35
Pin 35 selected

GPIO_SEL_36
Pin 36 selected

GPIO_SEL_37
Pin 37 selected

GPIO_SEL_38
Pin 38 selected

GPIO_SEL_39
Pin 39 selected

GPIO_PIN_REG_0

GPIO_PIN_REG_1

GPIO_PIN_REG_2

GPIO_PIN_REG_3

GPIO_PIN_REG_4

GPIO_PIN_REG_5

GPIO_PIN_REG_6

GPIO_PIN_REG_7

GPIO_PIN_REG_8

GPIO_PIN_REG_9

GPIO_PIN_REG_10

GPIO_PIN_REG_11

GPIO_PIN_REG_12

GPIO_PIN_REG_13

GPIO_PIN_REG_14

GPIO_PIN_REG_15

GPIO_PIN_REG_16

GPIO_PIN_REG_17

GPIO_PIN_REG_18

GPIO_PIN_REG_19

GPIO_PIN_REG_20

GPIO_PIN_REG_21

GPIO_PIN_REG_22

GPIO_PIN_REG_23

GPIO_PIN_REG_24

GPIO_PIN_REG_25

GPIO_PIN_REG_26

GPIO_PIN_REG_27

GPIO_PIN_REG_28

GPIO_PIN_REG_29

GPIO_PIN_REG_30

GPIO_PIN_REG_31

GPIO_PIN_REG_32

GPIO_PIN_REG_33

GPIO_PIN_REG_34

GPIO_PIN_REG_35

GPIO_PIN_REG_36

GPIO_PIN_REG_37

GPIO_PIN_REG_38

GPIO_PIN_REG_39

GPIO_PIN_REG_40

GPIO_PIN_REG_41

GPIO_PIN_REG_42

GPIO_PIN_REG_43

GPIO_PIN_REG_44

GPIO_PIN_REG_45

GPIO_PIN_REG_46

GPIO_PIN_REG_47

GPIO_PIN_REG_48

Type Definitions

typedef void (***gpio_isr_t**)(void*)

Enumerations

enum **gpio_port_t**

Values:

enumerator **GPIO_PORT_0**

enumerator **GPIO_PORT_MAX**

enum **gpio_num_t**

Values:

enumerator **GPIO_NUM_NC**

Use to signal not connected to S/W

enumerator **GPIO_NUM_0**

GPIO0, input and output

enumerator **GPIO_NUM_1**

GPIO1, input and output

enumerator **GPIO_NUM_2**

GPIO2, input and output

enumerator **GPIO_NUM_3**

GPIO3, input and output

enumerator **GPIO_NUM_4**

GPIO4, input and output

enumerator **GPIO_NUM_5**
GPIO5, input and output

enumerator **GPIO_NUM_6**
GPIO6, input and output

enumerator **GPIO_NUM_7**
GPIO7, input and output

enumerator **GPIO_NUM_8**
GPIO8, input and output

enumerator **GPIO_NUM_9**
GPIO9, input and output

enumerator **GPIO_NUM_10**
GPIO10, input and output

enumerator **GPIO_NUM_11**
GPIO11, input and output

enumerator **GPIO_NUM_12**
GPIO12, input and output

enumerator **GPIO_NUM_13**
GPIO13, input and output

enumerator **GPIO_NUM_14**
GPIO14, input and output

enumerator **GPIO_NUM_15**
GPIO15, input and output

enumerator **GPIO_NUM_16**
GPIO16, input and output

enumerator **GPIO_NUM_17**
GPIO17, input and output

enumerator **GPIO_NUM_18**
GPIO18, input and output

enumerator **GPIO_NUM_19**
GPIO19, input and output

enumerator **GPIO_NUM_20**
GPIO20, input and output

enumerator **GPIO_NUM_21**
GPIO21, input and output

enumerator **GPIO_NUM_22**
GPIO22, input and output

enumerator **GPIO_NUM_23**
GPIO23, input and output

enumerator **GPIO_NUM_25**
GPIO25, input and output

enumerator **GPIO_NUM_26**
GPIO26, input and output

enumerator **GPIO_NUM_27**
GPIO27, input and output

enumerator **GPIO_NUM_28**
GPIO28, input and output

enumerator **GPIO_NUM_29**
GPIO29, input and output

enumerator **GPIO_NUM_30**
GPIO30, input and output

enumerator **GPIO_NUM_31**
GPIO31, input and output

enumerator **GPIO_NUM_32**
GPIO32, input and output

enumerator **GPIO_NUM_33**
GPIO33, input and output

enumerator **GPIO_NUM_34**
GPIO34, input mode only

enumerator **GPIO_NUM_35**
GPIO35, input mode only

enumerator **GPIO_NUM_36**
GPIO36, input mode only

enumerator **GPIO_NUM_37**
GPIO37, input mode only

enumerator **GPIO_NUM_38**

GPIO38, input mode only

enumerator **GPIO_NUM_39**

GPIO39, input mode only

enumerator **GPIO_NUM_MAX**

enum **gpio_int_type_t**

Values:

enumerator **GPIO_INTR_DISABLE**

Disable GPIO interrupt

enumerator **GPIO_INTR_POSEDGE**

GPIO interrupt type : rising edge

enumerator **GPIO_INTR_NEGEDGE**

GPIO interrupt type : falling edge

enumerator **GPIO_INTR_ANYEDGE**

GPIO interrupt type : both rising and falling edge

enumerator **GPIO_INTR_LOW_LEVEL**

GPIO interrupt type : input low level trigger

enumerator **GPIO_INTR_HIGH_LEVEL**

GPIO interrupt type : input high level trigger

enumerator **GPIO_INTR_MAX**

enum **gpio_mode_t**

Values:

enumerator **GPIO_MODE_DISABLE**

GPIO mode : disable input and output

enumerator **GPIO_MODE_INPUT**

GPIO mode : input only

enumerator **GPIO_MODE_OUTPUT**

GPIO mode : output only mode

enumerator **GPIO_MODE_OUTPUT_OD**

GPIO mode : output only with open-drain mode

enumerator **GPIO_MODE_INPUT_OUTPUT_OD**

GPIO mode : output and input with open-drain mode

enumerator **GPIO_MODE_INPUT_OUTPUT**

GPIO mode : output and input mode

enum **gpio_pullup_t**

Values:

enumerator **GPIO_PULLUP_DISABLE**

Disable GPIO pull-up resistor

enumerator **GPIO_PULLUP_ENABLE**

Enable GPIO pull-up resistor

enum **gpio_pulldown_t**

Values:

enumerator **GPIO_PULLDOWN_DISABLE**

Disable GPIO pull-down resistor

enumerator **GPIO_PULLDOWN_ENABLE**

Enable GPIO pull-down resistor

enum **gpio_pull_mode_t**

Values:

enumerator **GPIO_PULLUP_ONLY**

Pad pull up

enumerator **GPIO_PULLDOWN_ONLY**

Pad pull down

enumerator **GPIO_PULLUP_PULLDOWN**

Pad pull up + pull down

enumerator **GPIO_FLOATING**

Pad floating

enum **gpio_drive_cap_t**

Values:

enumerator **GPIO_DRIVE_CAP_0**

Pad drive capability: weak

enumerator **GPIO_DRIVE_CAP_1**

Pad drive capability: stronger

enumerator **GPIO_DRIVE_CAP_2**

Pad drive capability: medium

enumerator **GPIO_DRIVE_CAP_DEFAULT**

Pad drive capability: medium

enumerator **GPIO_DRIVE_CAP_3**

Pad drive capability: strongest

enumerator **GPIO_DRIVE_CAP_MAX**

API Reference - RTC GPIO

Header File

- components/driver/include/driver/rtc_io.h

Functions

static inline bool **rtc_gpio_is_valid_gpio**(*gpio_num_t* gpio_num)

Determine if the specified GPIO is a valid RTC GPIO.

Parameters **gpio_num** –GPIO number
Returns true if GPIO is valid for RTC GPIO use. false otherwise.

static inline int **rtc_io_number_get**(*gpio_num_t* gpio_num)

Get RTC IO index number by gpio number.

Parameters **gpio_num** –GPIO number
Returns >=0: Index of rtcio. -1 : The gpio is not rtcio.

esp_err_t **rtc_gpio_init**(*gpio_num_t* gpio_num)

Init a GPIO as RTC GPIO.

This function must be called when initializing a pad for an analog function.

Parameters **gpio_num** –GPIO number (e.g. GPIO_NUM_12)
Returns

- ESP_OK success
- ESP_ERR_INVALID_ARG GPIO is not an RTC IO

esp_err_t **rtc_gpio_deinit**(*gpio_num_t* gpio_num)

Init a GPIO as digital GPIO.

Parameters **gpio_num** –GPIO number (e.g. GPIO_NUM_12)
Returns

- ESP_OK success
- ESP_ERR_INVALID_ARG GPIO is not an RTC IO

uint32_t **rtc_gpio_get_level**(*gpio_num_t* gpio_num)

Get the RTC IO input level.

Parameters **gpio_num** –GPIO number (e.g. GPIO_NUM_12)
Returns

- 1 High level
- 0 Low level
- ESP_ERR_INVALID_ARG GPIO is not an RTC IO

esp_err_t **rtc_gpio_set_level**(*gpio_num_t* gpio_num, uint32_t level)

Set the RTC IO output level.

Parameters

- **gpio_num** –GPIO number (e.g. GPIO_NUM_12)
- **level** –output level

Returns
- ESP_OK Success
- ESP_ERR_INVALID_ARG GPIO is not an RTC IO

esp_err_t **rtc_gpio_set_direction**(*gpio_num_t* gpio_num, *rtc_gpio_mode_t* mode)

RTC GPIO set direction.

Configure RTC GPIO direction, such as output only, input only, output and input.

Parameters
- **gpio_num** –GPIO number (e.g. GPIO_NUM_12)
- **mode** –GPIO direction

Returns
- ESP_OK Success
- ESP_ERR_INVALID_ARG GPIO is not an RTC IO

esp_err_t **rtc_gpio_set_direction_in_sleep**(*gpio_num_t* gpio_num, *rtc_gpio_mode_t* mode)

RTC GPIO set direction in deep sleep mode or disable sleep status (default). In some application scenarios, IO needs to have another states during deep sleep.

NOTE: ESP32 support INPUT_ONLY mode. ESP32S2 support INPUT_ONLY, OUTPUT_ONLY, INPUT_OUTPUT mode.

Parameters
- **gpio_num** –GPIO number (e.g. GPIO_NUM_12)
- **mode** –GPIO direction

Returns
- ESP_OK Success
- ESP_ERR_INVALID_ARG GPIO is not an RTC IO

esp_err_t **rtc_gpio_pullup_en**(*gpio_num_t* gpio_num)

RTC GPIO pullup enable.

This function only works for RTC IOs. In general, call gpio_pullup_en, which will work both for normal GPIOs and RTC IOs.

Parameters **gpio_num** –GPIO number (e.g. GPIO_NUM_12)

Returns
- ESP_OK Success
- ESP_ERR_INVALID_ARG GPIO is not an RTC IO

esp_err_t **rtc_gpio_pulldown_en**(*gpio_num_t* gpio_num)

RTC GPIO pulldown enable.

This function only works for RTC IOs. In general, call gpio_pulldown_en, which will work both for normal GPIOs and RTC IOs.

Parameters **gpio_num** –GPIO number (e.g. GPIO_NUM_12)

Returns
- ESP_OK Success
- ESP_ERR_INVALID_ARG GPIO is not an RTC IO

esp_err_t **rtc_gpio_pullup_dis**(*gpio_num_t* gpio_num)

RTC GPIO pullup disable.

This function only works for RTC IOs. In general, call gpio_pullup_dis, which will work both for normal GPIOs and RTC IOs.

Parameters **gpio_num** –GPIO number (e.g. GPIO_NUM_12)

Returns
- ESP_OK Success
- ESP_ERR_INVALID_ARG GPIO is not an RTC IO

esp_err_t **rtc_gpio_pulldown_dis** (*gpio_num_t* gpio_num)

RTC GPIO pulldown disable.

This function only works for RTC IOs. In general, call gpio_pulldown_dis, which will work both for normal GPIOs and RTC IOs.

Parameters **gpio_num** –GPIO number (e.g. GPIO_NUM_12)
Returns
- ESP_OK Success
- ESP_ERR_INVALID_ARG GPIO is not an RTC IO

esp_err_t **rtc_gpio_set_drive_capability** (*gpio_num_t* gpio_num, *gpio_drive_cap_t* strength)

Set RTC GPIO pad drive capability.

Parameters
- **gpio_num** –GPIO number, only support output GPIOs
- **strength** –Drive capability of the pad

Returns
- ESP_OK Success
- ESP_ERR_INVALID_ARG Parameter error

esp_err_t **rtc_gpio_get_drive_capability** (*gpio_num_t* gpio_num, *gpio_drive_cap_t* *strength)

Get RTC GPIO pad drive capability.

Parameters
- **gpio_num** –GPIO number, only support output GPIOs
- **strength** –Pointer to accept drive capability of the pad

Returns
- ESP_OK Success
- ESP_ERR_INVALID_ARG Parameter error

esp_err_t **rtc_gpio_hold_en** (*gpio_num_t* gpio_num)

Enable hold function on an RTC IO pad.

Enabling HOLD function will cause the pad to latch current values of input enable, output enable, output value, function, drive strength values. This function is useful when going into light or deep sleep mode to prevent the pin configuration from changing.

Parameters **gpio_num** –GPIO number (e.g. GPIO_NUM_12)
Returns
- ESP_OK Success
- ESP_ERR_INVALID_ARG GPIO is not an RTC IO

esp_err_t **rtc_gpio_hold_dis** (*gpio_num_t* gpio_num)

Disable hold function on an RTC IO pad.

Disabling hold function will allow the pad receive the values of input enable, output enable, output value, function, drive strength from RTC_IO peripheral.

Parameters **gpio_num** –GPIO number (e.g. GPIO_NUM_12)
Returns
- ESP_OK Success
- ESP_ERR_INVALID_ARG GPIO is not an RTC IO

esp_err_t **rtc_gpio_isolate** (*gpio_num_t* gpio_num)

Helper function to disconnect internal circuits from an RTC IO This function disables input, output, pullup, pulldown, and enables hold feature for an RTC IO. Use this function if an RTC IO needs to be disconnected from internal circuits in deep sleep, to minimize leakage current.

In particular, for ESP32-WROVER module, call rtc_gpio_isolate(GPIO_NUM_12) before entering deep sleep, to reduce deep sleep current.

Parameters **gpio_num** –GPIO number (e.g. GPIO_NUM_12).
Returns

- ESP_OK on success
- ESP_ERR_INVALID_ARG if GPIO is not an RTC IO

esp_err_t **rtc_gpio_force_hold_all**(void)

Enable force hold signal for all RTC IOs.

Each RTC pad has a "force hold" input signal from the RTC controller. If this signal is set, pad latches current values of input enable, function, output enable, and other signals which come from the RTC mux. Force hold signal is enabled before going into deep sleep for pins which are used for EXT1 wakeup.

esp_err_t **rtc_gpio_force_hold_dis_all**(void)

Disable force hold signal for all RTC IOs.

esp_err_t **rtc_gpio_wakeup_enable**(*gpio_num_t* gpio_num, *gpio_int_type_t* intr_type)

Enable wakeup from sleep mode using specific GPIO.

Parameters
- **gpio_num** –GPIO number
- **intr_type** –Wakeup on high level (GPIO_INTR_HIGH_LEVEL) or low level (GPIO_INTR_LOW_LEVEL)

Returns
- ESP_OK on success
- ESP_ERR_INVALID_ARG if gpio_num is not an RTC IO, or intr_type is not one of GPIO_INTR_HIGH_LEVEL, GPIO_INTR_LOW_LEVEL.

esp_err_t **rtc_gpio_wakeup_disable**(*gpio_num_t* gpio_num)

Disable wakeup from sleep mode using specific GPIO.

Parameters **gpio_num** –GPIO number

Returns
- ESP_OK on success
- ESP_ERR_INVALID_ARG if gpio_num is not an RTC IO

Macros

RTC_GPIO_IS_VALID_GPIO(gpio_num)

Header File

- components/hal/include/hal/rtc_io_types.h

Enumerations

enum **rtc_gpio_mode_t**

RTCIO output/input mode type.

Values:

enumerator **RTC_GPIO_MODE_INPUT_ONLY**

Pad input

enumerator **RTC_GPIO_MODE_OUTPUT_ONLY**

Pad output

enumerator **RTC_GPIO_MODE_INPUT_OUTPUT**

Pad input + output

enumerator **RTC_GPIO_MODE_DISABLED**

Pad (output + input) disable

enumerator **RTC_GPIO_MODE_OUTPUT_OD**

Pad open-drain output

enumerator **RTC_GPIO_MODE_INPUT_OUTPUT_OD**

Pad input + open-drain output

2.3.5 Inter-Integrated Circuit (I2C)

Overview

I2C is a serial, synchronous, half-duplex communication protocol that allows co-existence of multiple masters and slaves on the same bus. The I2C bus consists of two lines: serial data line (SDA) and serial clock (SCL). Both lines require pull-up resistors.

With such advantages as simplicity and low manufacturing cost, I2C is mostly used for communication of low-speed peripheral devices over short distances (within one foot).

ESP32 has two I2C controllers (also referred to as ports) which are responsible for handling communications on the I2C bus. Each I2C controller can operate as master or slave. As an example, one controller can act as a master and the other as a slave at the same time.

Driver Features

I2C driver governs communications of devices over the I2C bus. The driver supports the following features:

- Reading and writing bytes in Master mode
- Slave mode
- Reading and writing to registers which are in turn read/written by the master

Driver Usage

The following sections describe typical steps of configuring and operating the I2C driver:

1. *Configuration* - set the initialization parameters (master or slave mode, GPIO pins for SDA and SCL, clock speed, etc.)
2. *Install Driver*- activate the driver on one of the two I2C controllers as a master or slave
3. Depending on whether you configure the driver for a master or slave, choose the appropriate item
   a) *Communication as Master* - handle communications (master)
   b) *Communication as Slave* - respond to messages from the master (slave)
4. *Interrupt Handling* - configure and service I2C interrupts
5. *Customized Configuration* - adjust default I2C communication parameters (timings, bit order, etc.)
6. *Error Handling* - how to recognize and handle driver configuration and communication errors
7. *Delete Driver*- release resources used by the I2C driver when communication ends

Configuration To establish I2C communication, start by configuring the driver. This is done by setting the parameters of the structure `i2c_config_t`:

- Set I2C **mode of operation** - slave or master from `i2c_mode_t`
- Configure **communication pins**
  - Assign GPIO pins for SDA and SCL signals

  - Set whether to enable ESP32's internal pull-ups
- (Master only) Set I2C **clock speed**
- (Slave only) Configure the following
  - Whether to enable **10 bit address mode**
  - Define **slave address**

After that, initialize the configuration for a given I2C port. For this, call the function *i2c_param_config()* and pass to it the port number and the structure *i2c_config_t*.

Configuration example (master):

```
int i2c_master_port = 0;
i2c_config_t conf = {
    .mode = I2C_MODE_MASTER,
    .sda_io_num = I2C_MASTER_SDA_IO,          // select GPIO specific to your␣
↪project
    .sda_pullup_en = GPIO_PULLUP_ENABLE,
    .scl_io_num = I2C_MASTER_SCL_IO,          // select GPIO specific to your␣
↪project
    .scl_pullup_en = GPIO_PULLUP_ENABLE,
    .master.clk_speed = I2C_MASTER_FREQ_HZ,  // select frequency specific to your␣
↪project
    // .clk_flags = 0,          /*!< Optional, you can use I2C_SCLK_SRC_FLAG_*␣
↪flags to choose i2c source clock here. */
};
```

Configuration example (slave):

```
int i2c_slave_port = I2C_SLAVE_NUM;
i2c_config_t conf_slave = {
    .sda_io_num = I2C_SLAVE_SDA_IO,          // select GPIO specific to your␣
↪project
    .sda_pullup_en = GPIO_PULLUP_ENABLE,
    .scl_io_num = I2C_SLAVE_SCL_IO,          // select GPIO specific to your␣
↪project
    .scl_pullup_en = GPIO_PULLUP_ENABLE,
    .mode = I2C_MODE_SLAVE,
    .slave.addr_10bit_en = 0,
    .slave.slave_addr = ESP_SLAVE_ADDR,      // address of your project
};
```

At this stage, *i2c_param_config()* also sets a few other I2C configuration parameters to default values that are defined by the I2C specification. For more details on the values and how to modify them, see *Customized Configuration*.

Source Clock Configuration **Clock sources allocator** is added for supporting different clock sources. The clock allocator will choose one clock source that meets all the requirements of frequency and capability (as requested in *i2c_config_t::clk_flags*).

When *i2c_config_t::clk_flags* is 0, the clock allocator will select only according to the desired frequency. If no special capabilities are needed, such as APB, you can configure the clock allocator to select the source clock only according to the desired frequency. For this, set *i2c_config_t::clk_flags* to 0. For clock characteristics, see the table below.

Note: A clock is not a valid option, if it doesn't meet the requested capabilities, i.e. any bit of requested capabilities (clk_flags) is 0 in the clock's capabilities.

Table 2: Characteristics of ESP32 clock sources

Clock name	Clock frequency	MAX freq for SCL	Clock capabilities
APB clock	80 MHz	4 MHz	/

Explanations for *i2c_config_t::clk_flags* are as follows:

1. *I2C_SCLK_SRC_FLAG_AWARE_DFS*: Clock's baud rate will not change while APB clock is changing.
2. *I2C_SCLK_SRC_FLAG_LIGHT_SLEEP*: It supports Light-sleep mode, which APB clock cannot do.
3. Some flags may not be supported on ESP32, reading technical reference manual before using it.

Note: The clock frequency of SCL in master mode should not be lager than max frequency for SCL mentioned in the table above.

Note: The clock frequency of SCL will be influenced by the pull-up resistors and wire capacitance (or might slave capacitance) together. Therefore, users need to choose correct pull-up resistors by themselves to make the frequency accurate. It is recommended by I2C protocol that the pull-up resistors commonly range from 1KOhms to 10KOhms, but different frequencies need different resistors.

Generally speaking, the higher frequency is selected, the smaller resistor should be used (but not less than 1KOhms). This is because high resistor will decline the current, which will lengthen the rising time and reduce the frequency. Usually, range 2KOhms to 5KOhms is what we recommend, but users also might need to make some adjustment depends on their reality.

Install Driver After the I2C driver is configured, install it by calling the function *i2c_driver_install()* with the following parameters:

- Port number, one of the two port numbers from *i2c_port_t*
- Master or slave, selected from *i2c_mode_t*
- (Slave only) Size of buffers to allocate for sending and receiving data. As I2C is a master-centric bus, data can only go from the slave to the master at the master's request. Therefore, the slave will usually have a send buffer where the slave application writes data. The data remains in the send buffer to be read by the master at the master's own discretion.
- Flags for allocating the interrupt (see ESP_INTR_FLAG_* values in esp_hw_support/include/esp_intr_alloc.h)

Communication as Master After installing the I2C driver, ESP32 is ready to communicate with other I2C devices.

ESP32's I2C controller operating as master is responsible for establishing communication with I2C slave devices and sending commands to trigger a slave to action, for example, to take a measurement and send the readings back to the master.

For better process organization, the driver provides a container, called a "command link", that should be populated with a sequence of commands and then passed to the I2C controller for execution.

Master Write The example below shows how to build a command link for an I2C master to send *n* bytes to a slave.

The following describes how a command link for a "master write" is set up and what comes inside:

1. Create a command link with *i2c_cmd_link_create()*.
   Then, populate it with the series of data to be sent to the slave:
   a) **Start bit** - *i2c_master_start()*

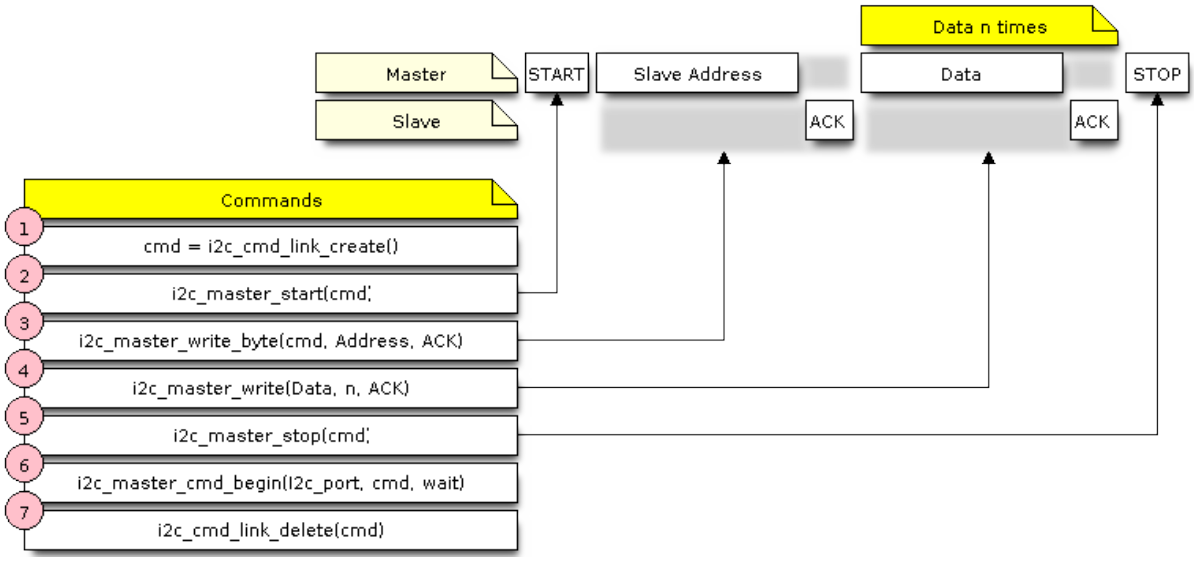

Fig. 9: I2C command link - master write example

b) **Slave address** - `i2c_master_write_byte()`. The single byte address is provided as an argument of this function call.
c) **Data** - One or more bytes as an argument of `i2c_master_write()`
d) **Stop bit** - `i2c_master_stop()`
Both functions `i2c_master_write_byte()` and `i2c_master_write()` have an additional argument specifying whether the master should ensure that it has received the ACK bit.

2. Trigger the execution of the command link by I2C controller by calling `i2c_master_cmd_begin()`. Once the execution is triggered, the command link cannot be modified.
3. After the commands are transmitted, release the resources used by the command link by calling `i2c_cmd_link_delete()`.

Master Read The example below shows how to build a command link for an I2C master to read *n* bytes from a slave.

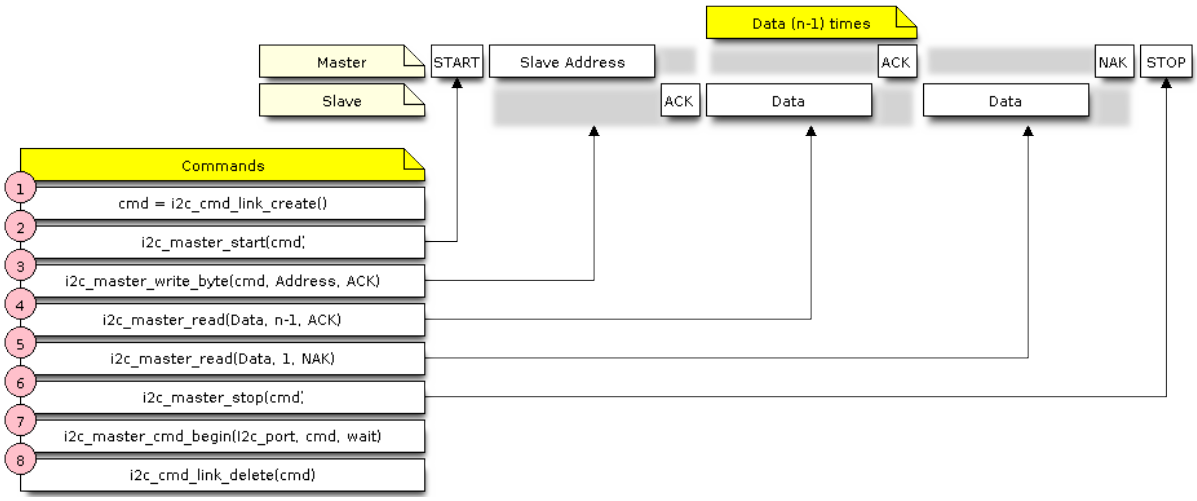

Fig. 10: I2C command link - master read example

Compared to writing data, the command link is populated in Step 4 not with `i2c_master_write...` functions but with `i2c_master_read_byte()` and / or `i2c_master_read()`. Also, the last read in Step 5 is configured so that the master does not provide the ACK bit.

Indicating Write or Read After sending a slave address (see Step 3 on both diagrams above), the master either writes or reads from the slave.

The information on what the master will actually do is hidden in the least significant bit of the slave's address.

For this reason, the command link sent by the master to write data to the slave contains the address `(ESP_SLAVE_ADDR << 1) | I2C_MASTER_WRITE` and looks as follows:

```
i2c_master_write_byte(cmd, (ESP_SLAVE_ADDR << 1) | I2C_MASTER_WRITE, ACK_EN);
```

Likewise, the command link to read from the slave looks as follows:

```
i2c_master_write_byte(cmd, (ESP_SLAVE_ADDR << 1) | I2C_MASTER_READ, ACK_EN);
```

Communication as Slave After installing the I2C driver, ESP32 is ready to communicate with other I2C devices.

The API provides the following functions for slaves

- *i2c_slave_read_buffer()*
  Whenever the master writes data to the slave, the slave will automatically store it in the receive buffer. This allows the slave application to call the function *i2c_slave_read_buffer()* at its own discretion. This function also has a parameter to specify block time if no data is in the receive buffer. This will allow the slave application to wait with a specified timeout for data to arrive to the buffer.
- *i2c_slave_write_buffer()*
  The send buffer is used to store all the data that the slave wants to send to the master in FIFO order. The data stays there until the master requests for it. The function *i2c_slave_write_buffer()* has a parameter to specify block time if the send buffer is full. This will allow the slave application to wait with a specified timeout for the adequate amount of space to become available in the send buffer.

A code example showing how to use these functions can be found in peripherals/i2c.

Interrupt Handling During driver installation, an interrupt handler is installed by default. However, you can register your own interrupt handler instead of the default one by calling the function *i2c_isr_register()*. When implementing your own interrupt handler, refer to *ESP32 Technical Reference Manual* > *I2C Controller (I2C)* > *Interrupts* [PDF] for the description of interrupts triggered by the I2C controller.

To delete an interrupt handler, call *i2c_isr_free()*.

Customized Configuration As mentioned at the end of Section *Configuration*, when the function *i2c_param_config()* initializes the driver configuration for an I2C port, it also sets several I2C communication parameters to default values defined in the I2C specification. Some other related parameters are pre-configured in registers of the I2C controller.

All these parameters can be changed to user-defined values by calling dedicated functions given in the table below. Please note that the timing values are defined in APB clock cycles. The frequency of APB is specified in `I2C_APB_CLK_FREQ`.

Table 3: Other Configurable I2C Communication Parameters

Parameters to Change	Function
High time and low time for SCL pulses	*i2c_set_period()*
SCL and SDA signal timing used during generation of **start** signals	*i2c_set_start_timing()*
SCL and SDA signal timing used during generation of **stop** signals	*i2c_set_stop_timing()*
Timing relationship between SCL and SDA signals when slave samples, as well as when master toggles	*i2c_set_data_timing()*
I2C timeout	*i2c_set_timeout()*
Choice between transmitting / receiving the LSB or MSB first, choose one of the modes defined in *i2c_trans_mode_t*	*i2c_set_data_mode()*

Each of the above functions has a *_get_* counterpart to check the currently set value. For example, to check the I2C timeout value, call `i2c_get_timeout()`.

To check the default parameter values which are set during the driver configuration process, please refer to the file driver/i2c.c and look for defines with the suffix `_DEFAULT`.

You can also select different pins for SDA and SCL signals and alter the configuration of pull-ups with the function `i2c_set_pin()`. If you want to modify already entered values, use the function `i2c_param_config()`.

Note: ESP32's internal pull-ups are in the range of tens of kOhm, which is, in most cases, insufficient for use as I2C pull-ups. Users are advised to use external pull-ups with values described in the I2C specification.

Error Handling The majority of I2C driver functions either return `ESP_OK` on successful completion or a specific error code on failure. It is a good practice to always check the returned values and implement error handling. The driver also prints out log messages that contain error details, e.g., when checking the validity of entered configuration. For details please refer to the file driver/i2c.c and look for defines with the suffix `_ERR_STR`.

Use dedicated interrupts to capture communication failures. For instance, if a slave stretches the clock for too long while preparing the data to send back to master, the interrupt `I2C_TIME_OUT_INT` will be triggered. For detailed information, see *Interrupt Handling*.

In case of a communication failure, you can reset the internal hardware buffers by calling the functions `i2c_reset_tx_fifo()` and `i2c_reset_rx_fifo()` for the send and receive buffers respectively.

Delete Driver When the I2C communication is established with the function `i2c_driver_install()` and is not required for some substantial amount of time, the driver may be deinitialized to release allocated resources by calling `i2c_driver_delete()`.

Before calling `i2c_driver_delete()` to remove i2c driver, please make sure that all threads have stopped using the driver in any way, because this function does not guarantee thread safety.

Application Example

I2C master and slave example: peripherals/i2c.

API Reference

Header File

- components/driver/include/driver/i2c.h

Functions

esp_err_t **i2c_driver_install** (*i2c_port_t* i2c_num, *i2c_mode_t* mode, size_t slv_rx_buf_len, size_t slv_tx_buf_len, int intr_alloc_flags)

Install an I2C driver.

Note: In master mode, if the cache is likely to be disabled(such as write flash) and the slave is time-sensitive, `ESP_INTR_FLAG_IRAM` is suggested to be used. In this case, please use the memory allocated from internal RAM in i2c read and write function, because we can not access the psram(if psram is enabled) in interrupt handle function when cache is disabled.

Parameters

- **i2c_num** –I2C port number
- **mode** –I2C mode (either master or slave)

- **slv_rx_buf_len** –Receiving buffer size. Only slave mode will use this value, it is ignored in master mode.
- **slv_tx_buf_len** –Sending buffer size. Only slave mode will use this value, it is ignored in master mode.
- **intr_alloc_flags** –Flags used to allocate the interrupt. One or multiple (ORred) ESP_INTR_FLAG_* values. See esp_intr_alloc.h for more info.

Returns

- ESP_OK Success
- ESP_ERR_INVALID_ARG Parameter error
- ESP_FAIL Driver installation error

esp_err_t **i2c_driver_delete**(*i2c_port_t* i2c_num)

Delete I2C driver.

Note: This function does not guarantee thread safety. Please make sure that no thread will continuously hold semaphores before calling the delete function.

Parameters **i2c_num** –I2C port to delete

Returns

- ESP_OK Success
- ESP_ERR_INVALID_ARG Parameter error

esp_err_t **i2c_param_config**(*i2c_port_t* i2c_num, const *i2c_config_t* *i2c_conf)

Configure an I2C bus with the given configuration.

Parameters

- **i2c_num** –I2C port to configure
- **i2c_conf** –Pointer to the I2C configuration

Returns

- ESP_OK Success
- ESP_ERR_INVALID_ARG Parameter error

esp_err_t **i2c_reset_tx_fifo**(*i2c_port_t* i2c_num)

reset I2C tx hardware fifo

Parameters **i2c_num** –I2C port number

Returns

- ESP_OK Success
- ESP_ERR_INVALID_ARG Parameter error

esp_err_t **i2c_reset_rx_fifo**(*i2c_port_t* i2c_num)

reset I2C rx fifo

Parameters **i2c_num** –I2C port number

Returns

- ESP_OK Success
- ESP_ERR_INVALID_ARG Parameter error

esp_err_t **i2c_isr_register**(*i2c_port_t* i2c_num, void (*fn)(void*), void *arg, int intr_alloc_flags, *intr_handle_t* *handle)

Register an I2C ISR handler.

Parameters

- **i2c_num** –I2C port number to attach handler to
- **fn** –ISR handler function
- **arg** –Parameter for the ISR handler
- **intr_alloc_flags** –Flags used to allocate the interrupt. One or multiple (ORred) ESP_INTR_FLAG_* values. See esp_intr_alloc.h for more info.
- **handle** –Handle return from esp_intr_alloc.

Returns
- ESP_OK Success
- ESP_ERR_INVALID_ARG Parameter error

esp_err_t **i2c_isr_free**(*intr_handle_t* handle)

Delete and free I2C ISR handle.

Parameters **handle** –Handle of isr to delete.
Returns
- ESP_OK Success
- ESP_ERR_INVALID_ARG Parameter error

esp_err_t **i2c_set_pin**(*i2c_port_t* i2c_num, int sda_io_num, int scl_io_num, bool sda_pullup_en, bool scl_pullup_en, *i2c_mode_t* mode)

Configure GPIO pins for I2C SCK and SDA signals.

Parameters
- **i2c_num** –I2C port number
- **sda_io_num** –GPIO number for I2C SDA signal
- **scl_io_num** –GPIO number for I2C SCL signal
- **sda_pullup_en** –Enable the internal pullup for SDA pin
- **scl_pullup_en** –Enable the internal pullup for SCL pin
- **mode** –I2C mode

Returns
- ESP_OK Success
- ESP_ERR_INVALID_ARG Parameter error

esp_err_t **i2c_master_write_to_device**(*i2c_port_t* i2c_num, uint8_t device_address, const uint8_t *write_buffer, size_t write_size, TickType_t ticks_to_wait)

Perform a write to a device connected to a particular I2C port. This function is a wrapper to `i2c_master_start()`, `i2c_master_write()`, `i2c_master_read()`, etc ···It shall only be called in I2C master mode.

Parameters
- **i2c_num** –I2C port number to perform the transfer on
- **device_address** –I2C device’ s 7-bit address
- **write_buffer** –Bytes to send on the bus
- **write_size** –Size, in bytes, of the write buffer
- **ticks_to_wait** –Maximum ticks to wait before issuing a timeout.

Returns
- ESP_OK Success
- ESP_ERR_INVALID_ARG Parameter error
- ESP_FAIL Sending command error, slave hasn’ t ACK the transfer.
- ESP_ERR_INVALID_STATE I2C driver not installed or not in master mode.
- ESP_ERR_TIMEOUT Operation timeout because the bus is busy.

esp_err_t **i2c_master_read_from_device**(*i2c_port_t* i2c_num, uint8_t device_address, uint8_t *read_buffer, size_t read_size, TickType_t ticks_to_wait)

Perform a read to a device connected to a particular I2C port. This function is a wrapper to `i2c_master_start()`, `i2c_master_write()`, `i2c_master_read()`, etc ···It shall only be called in I2C master mode.

Parameters
- **i2c_num** –I2C port number to perform the transfer on
- **device_address** –I2C device’ s 7-bit address
- **read_buffer** –Buffer to store the bytes received on the bus
- **read_size** –Size, in bytes, of the read buffer
- **ticks_to_wait** –Maximum ticks to wait before issuing a timeout.

Returns
- ESP_OK Success
- ESP_ERR_INVALID_ARG Parameter error

- ESP_FAIL Sending command error, slave hasn't ACK the transfer.
- ESP_ERR_INVALID_STATE I2C driver not installed or not in master mode.
- ESP_ERR_TIMEOUT Operation timeout because the bus is busy.

esp_err_t **i2c_master_write_read_device**(*i2c_port_t* i2c_num, uint8_t device_address, const uint8_t *write_buffer, size_t write_size, uint8_t *read_buffer, size_t read_size, TickType_t ticks_to_wait)

Perform a write followed by a read to a device on the I2C bus. A repeated start signal is used between the `write` and `read`, thus, the bus is not released until the two transactions are finished. This function is a wrapper to `i2c_master_start()`, `i2c_master_write()`, `i2c_master_read()`, etc··· It shall only be called in I2C master mode.

Parameters

- **i2c_num** –I2C port number to perform the transfer on
- **device_address** –I2C device's 7-bit address
- **write_buffer** –Bytes to send on the bus
- **write_size** –Size, in bytes, of the write buffer
- **read_buffer** –Buffer to store the bytes received on the bus
- **read_size** –Size, in bytes, of the read buffer
- **ticks_to_wait** –Maximum ticks to wait before issuing a timeout.

Returns

- ESP_OK Success
- ESP_ERR_INVALID_ARG Parameter error
- ESP_FAIL Sending command error, slave hasn't ACK the transfer.
- ESP_ERR_INVALID_STATE I2C driver not installed or not in master mode.
- ESP_ERR_TIMEOUT Operation timeout because the bus is busy.

i2c_cmd_handle_t **i2c_cmd_link_create_static**(uint8_t *buffer, uint32_t size)

Create and initialize an I2C commands list with a given buffer. All the allocations for data or signals (START, STOP, ACK, ···) will be performed within this buffer. This buffer must be valid during the whole transaction. After finishing the I2C transactions, it is required to call `i2c_cmd_link_delete_static()`.

Note: It is **highly** advised to not allocate this buffer on the stack. The size of the data used underneath may increase in the future, resulting in a possible stack overflow as the macro `I2C_LINK_RECOMMENDED_SIZE` would also return a bigger value. A better option is to use a buffer allocated statically or dynamically (with `malloc`).

Parameters

- **buffer** –Buffer to use for commands allocations
- **size** –Size in bytes of the buffer

Returns Handle to the I2C command link or NULL if the buffer provided is too small, please use `I2C_LINK_RECOMMENDED_SIZE` macro to get the recommended size for the buffer.

i2c_cmd_handle_t **i2c_cmd_link_create**(void)

Create and initialize an I2C commands list with a given buffer. After finishing the I2C transactions, it is required to call `i2c_cmd_link_delete()` to release and return the resources. The required bytes will be dynamically allocated.

Returns Handle to the I2C command link

void **i2c_cmd_link_delete_static**(*i2c_cmd_handle_t* cmd_handle)

Free the I2C commands list allocated statically with `i2c_cmd_link_create_static`.

Parameters **cmd_handle** –I2C commands list allocated statically. This handle should be created thanks to `i2c_cmd_link_create_static()` function

void **i2c_cmd_link_delete**(*i2c_cmd_handle_t* cmd_handle)

Free the I2C commands list.

Parameters **cmd_handle** –I2C commands list. This handle should be created thanks to `i2c_cmd_link_create()` function

esp_err_t **i2c_master_start** (*i2c_cmd_handle_t* cmd_handle)

Queue a "START signal" to the given commands list. This function shall only be called in I2C master mode. Call `i2c_master_cmd_begin()` to send all the queued commands.

Parameters **cmd_handle** –I2C commands list

Returns

- ESP_OK Success
- ESP_ERR_INVALID_ARG Parameter error
- ESP_ERR_NO_MEM The static buffer used to create `cmd_handler` is too small
- ESP_FAIL No more memory left on the heap

esp_err_t **i2c_master_write_byte** (*i2c_cmd_handle_t* cmd_handle, uint8_t data, bool ack_en)

Queue a "write byte" command to the commands list. A single byte will be sent on the I2C port. This function shall only be called in I2C master mode. Call `i2c_master_cmd_begin()` to send all queued commands.

Parameters

- **cmd_handle** –I2C commands list
- **data** –Byte to send on the port
- **ack_en** –Enable ACK signal

Returns

- ESP_OK Success
- ESP_ERR_INVALID_ARG Parameter error
- ESP_ERR_NO_MEM The static buffer used to create `cmd_handler` is too small
- ESP_FAIL No more memory left on the heap

esp_err_t **i2c_master_write** (*i2c_cmd_handle_t* cmd_handle, const uint8_t *data, size_t data_len, bool ack_en)

Queue a "write (multiple) bytes" command to the commands list. This function shall only be called in I2C master mode. Call `i2c_master_cmd_begin()` to send all queued commands.

Parameters

- **cmd_handle** –I2C commands list
- **data** –Bytes to send. This buffer shall remain **valid** until the transaction is finished. If the PSRAM is enabled and `intr_flag` is set to `ESP_INTR_FLAG_IRAM`, `data` should be allocated from internal RAM.
- **data_len** –Length, in bytes, of the data buffer
- **ack_en** –Enable ACK signal

Returns

- ESP_OK Success
- ESP_ERR_INVALID_ARG Parameter error
- ESP_ERR_NO_MEM The static buffer used to create `cmd_handler` is too small
- ESP_FAIL No more memory left on the heap

esp_err_t **i2c_master_read_byte** (*i2c_cmd_handle_t* cmd_handle, uint8_t *data, *i2c_ack_type_t* ack)

Queue a "read byte" command to the commands list. A single byte will be read on the I2C bus. This function shall only be called in I2C master mode. Call `i2c_master_cmd_begin()` to send all queued commands.

Parameters

- **cmd_handle** –I2C commands list
- **data** –Pointer where the received byte will the stored. This buffer shall remain **valid** until the transaction is finished.
- **ack** –ACK signal

Returns

- ESP_OK Success
- ESP_ERR_INVALID_ARG Parameter error
- ESP_ERR_NO_MEM The static buffer used to create `cmd_handler` is too small
- ESP_FAIL No more memory left on the heap

esp_err_t **i2c_master_read**(*i2c_cmd_handle_t* cmd_handle, uint8_t *data, size_t data_len, *i2c_ack_type_t* ack)

Queue a "read (multiple) bytes" command to the commands list. Multiple bytes will be read on the I2C bus. This function shall only be called in I2C master mode. Call `i2c_master_cmd_begin()` to send all queued commands.

Parameters
- **cmd_handle** –I2C commands list
- **data** –Pointer where the received bytes will the stored. This buffer shall remain **valid** until the transaction is finished.
- **data_len** –Size, in bytes, of the `data` buffer
- **ack** –ACK signal

Returns
- ESP_OK Success
- ESP_ERR_INVALID_ARG Parameter error
- ESP_ERR_NO_MEM The static buffer used to create `cmd_handler` is too small
- ESP_FAIL No more memory left on the heap

esp_err_t **i2c_master_stop**(*i2c_cmd_handle_t* cmd_handle)

Queue a "STOP signal" to the given commands list. This function shall only be called in I2C master mode. Call `i2c_master_cmd_begin()` to send all the queued commands.

Parameters **cmd_handle** –I2C commands list

Returns
- ESP_OK Success
- ESP_ERR_INVALID_ARG Parameter error
- ESP_ERR_NO_MEM The static buffer used to create `cmd_handler` is too small
- ESP_FAIL No more memory left on the heap

esp_err_t **i2c_master_cmd_begin**(*i2c_port_t* i2c_num, *i2c_cmd_handle_t* cmd_handle, TickType_t ticks_to_wait)

Send all the queued commands on the I2C bus, in master mode. The task will be blocked until all the commands have been sent out. The I2C port is protected by mutex, so this function is thread-safe. This function shall only be called in I2C master mode.

Parameters
- **i2c_num** –I2C port number
- **cmd_handle** –I2C commands list
- **ticks_to_wait** –Maximum ticks to wait before issuing a timeout.

Returns
- ESP_OK Success
- ESP_ERR_INVALID_ARG Parameter error
- ESP_FAIL Sending command error, slave hasn't ACK the transfer.
- ESP_ERR_INVALID_STATE I2C driver not installed or not in master mode.
- ESP_ERR_TIMEOUT Operation timeout because the bus is busy.

int **i2c_slave_write_buffer**(*i2c_port_t* i2c_num, const uint8_t *data, int size, TickType_t ticks_to_wait)

Write bytes to internal ringbuffer of the I2C slave data. When the TX fifo empty, the ISR will fill the hardware FIFO with the internal ringbuffer's data.

Note: This function shall only be called in I2C slave mode.

Parameters
- **i2c_num** –I2C port number
- **data** –Bytes to write into internal buffer
- **size** –Size, in bytes, of `data` buffer
- **ticks_to_wait** –Maximum ticks to wait.

Returns
- ESP_FAIL (-1) Parameter error

- Other (>=0) The number of data bytes pushed to the I2C slave buffer.

int **i2c_slave_read_buffer**(*i2c_port_t* i2c_num, uint8_t *data, size_t max_size, TickType_t ticks_to_wait)

Read bytes from I2C internal buffer. When the I2C bus receives data, the ISR will copy them from the hardware RX FIFO to the internal ringbuffer. Calling this function will then copy bytes from the internal ringbuffer to the `data` user buffer.

Note: This function shall only be called in I2C slave mode.

Parameters

- **i2c_num** –I2C port number
- **data** –Buffer to fill with ringbuffer’ s bytes
- **max_size** –Maximum bytes to read
- **ticks_to_wait** –Maximum waiting ticks

Returns

- ESP_FAIL(-1) Parameter error
- Others(>=0) The number of data bytes read from I2C slave buffer.

esp_err_t **i2c_set_period**(*i2c_port_t* i2c_num, int high_period, int low_period)

Set I2C master clock period.

Parameters

- **i2c_num** –I2C port number
- **high_period** –Clock cycle number during SCL is high level, high_period is a 14 bit value
- **low_period** –Clock cycle number during SCL is low level, low_period is a 14 bit value

Returns

- ESP_OK Success
- ESP_ERR_INVALID_ARG Parameter error

esp_err_t **i2c_get_period**(*i2c_port_t* i2c_num, int *high_period, int *low_period)

Get I2C master clock period.

Parameters

- **i2c_num** –I2C port number
- **high_period** –pointer to get clock cycle number during SCL is high level, will get a 14 bit value
- **low_period** –pointer to get clock cycle number during SCL is low level, will get a 14 bit value

Returns

- ESP_OK Success
- ESP_ERR_INVALID_ARG Parameter error

esp_err_t **i2c_filter_enable**(*i2c_port_t* i2c_num, uint8_t cyc_num)

Enable hardware filter on I2C bus Sometimes the I2C bus is disturbed by high frequency noise(about 20ns), or the rising edge of the SCL clock is very slow, these may cause the master state machine to break. Enable hardware filter can filter out high frequency interference and make the master more stable.

Note: Enable filter will slow down the SCL clock.

Parameters

- **i2c_num** –I2C port number to filter
- **cyc_num** –the APB cycles need to be filtered (0<= cyc_num <=7). When the period of a pulse is less than cyc_num * APB_cycle, the I2C controller will ignore this pulse.

Returns

- ESP_OK Success
- ESP_ERR_INVALID_ARG Parameter error

esp_err_t **i2c_filter_disable**(*i2c_port_t* i2c_num)

Disable filter on I2C bus.

Parameters **i2c_num** –I2C port number

Returns

- ESP_OK Success
- ESP_ERR_INVALID_ARG Parameter error

esp_err_t **i2c_set_start_timing**(*i2c_port_t* i2c_num, int setup_time, int hold_time)

set I2C master start signal timing

Parameters

- **i2c_num** –I2C port number
- **setup_time** –clock number between the falling-edge of SDA and rising-edge of SCL for start mark, it's a 10-bit value.
- **hold_time** –clock num between the falling-edge of SDA and falling-edge of SCL for start mark, it's a 10-bit value.

Returns

- ESP_OK Success
- ESP_ERR_INVALID_ARG Parameter error

esp_err_t **i2c_get_start_timing**(*i2c_port_t* i2c_num, int *setup_time, int *hold_time)

get I2C master start signal timing

Parameters

- **i2c_num** –I2C port number
- **setup_time** –pointer to get setup time
- **hold_time** –pointer to get hold time

Returns

- ESP_OK Success
- ESP_ERR_INVALID_ARG Parameter error

esp_err_t **i2c_set_stop_timing**(*i2c_port_t* i2c_num, int setup_time, int hold_time)

set I2C master stop signal timing

Parameters

- **i2c_num** –I2C port number
- **setup_time** –clock num between the rising-edge of SCL and the rising-edge of SDA, it's a 10-bit value.
- **hold_time** –clock number after the STOP bit's rising-edge, it's a 14-bit value.

Returns

- ESP_OK Success
- ESP_ERR_INVALID_ARG Parameter error

esp_err_t **i2c_get_stop_timing**(*i2c_port_t* i2c_num, int *setup_time, int *hold_time)

get I2C master stop signal timing

Parameters

- **i2c_num** –I2C port number
- **setup_time** –pointer to get setup time.
- **hold_time** –pointer to get hold time.

Returns

- ESP_OK Success
- ESP_ERR_INVALID_ARG Parameter error

esp_err_t **i2c_set_data_timing**(*i2c_port_t* i2c_num, int sample_time, int hold_time)

set I2C data signal timing

Parameters

- **i2c_num** –I2C port number
- **sample_time** –clock number I2C used to sample data on SDA after the rising-edge of SCL, it’ s a 10-bit value
- **hold_time** –clock number I2C used to hold the data after the falling-edge of SCL, it’ s a 10-bit value

Returns

- ESP_OK Success
- ESP_ERR_INVALID_ARG Parameter error

esp_err_t **i2c_get_data_timing**(*i2c_port_t* i2c_num, int *sample_time, int *hold_time)

get I2C data signal timing

Parameters

- **i2c_num** –I2C port number
- **sample_time** –pointer to get sample time
- **hold_time** –pointer to get hold time

Returns

- ESP_OK Success
- ESP_ERR_INVALID_ARG Parameter error

esp_err_t **i2c_set_timeout**(*i2c_port_t* i2c_num, int timeout)

set I2C timeout value

Parameters

- **i2c_num** –I2C port number
- **timeout** –timeout value for I2C bus (unit: APB 80Mhz clock cycle)

Returns

- ESP_OK Success
- ESP_ERR_INVALID_ARG Parameter error

esp_err_t **i2c_get_timeout**(*i2c_port_t* i2c_num, int *timeout)

get I2C timeout value

Parameters

- **i2c_num** –I2C port number
- **timeout** –pointer to get timeout value

Returns

- ESP_OK Success
- ESP_ERR_INVALID_ARG Parameter error

esp_err_t **i2c_set_data_mode**(*i2c_port_t* i2c_num, *i2c_trans_mode_t* tx_trans_mode, *i2c_trans_mode_t* rx_trans_mode)

set I2C data transfer mode

Parameters

- **i2c_num** –I2C port number
- **tx_trans_mode** –I2C sending data mode
- **rx_trans_mode** –I2C receving data mode

Returns

- ESP_OK Success
- ESP_ERR_INVALID_ARG Parameter error

esp_err_t **i2c_get_data_mode**(*i2c_port_t* i2c_num, *i2c_trans_mode_t* *tx_trans_mode, *i2c_trans_mode_t* *rx_trans_mode)

get I2C data transfer mode

Parameters

- **i2c_num** –I2C port number
- **tx_trans_mode** –pointer to get I2C sending data mode
- **rx_trans_mode** –pointer to get I2C receiving data mode

Returns

- ESP_OK Success

- ESP_ERR_INVALID_ARG Parameter error

Structures

struct **i2c_config_t**

I2C initialization parameters.

Public Members

i2c_mode_t **mode**

I2C mode

int **sda_io_num**

GPIO number for I2C sda signal

int **scl_io_num**

GPIO number for I2C scl signal

bool **sda_pullup_en**

Internal GPIO pull mode for I2C sda signal

bool **scl_pullup_en**

Internal GPIO pull mode for I2C scl signal

uint32_t **clk_speed**

I2C clock frequency for master mode, (no higher than 1MHz for now)

struct *i2c_config_t*::[anonymous]::[anonymous] **master**

I2C master config

uint8_t **addr_10bit_en**

I2C 10bit address mode enable for slave mode

uint16_t **slave_addr**

I2C address for slave mode

uint32_t **maximum_speed**

I2C expected clock speed from SCL.

struct *i2c_config_t*::[anonymous]::[anonymous] **slave**

I2C slave config

uint32_t **clk_flags**

Bitwise of `I2C_SCLK_SRC_FLAG_**FOR_DFS**` for clk source choice

Macros

I2C_APB_CLK_FREQ

I2C source clock is APB clock, 80MHz

I2C_NUM_MAX

I2C port max

I2C_NUM_0

I2C port 0

I2C_NUM_1

I2C port 1

I2C_SCLK_SRC_FLAG_FOR_NOMAL

Any one clock source that is available for the specified frequency may be choosen

I2C_SCLK_SRC_FLAG_AWARE_DFS

For REF tick clock, it won't change with APB.

I2C_SCLK_SRC_FLAG_LIGHT_SLEEP

For light sleep mode.

I2C_INTERNAL_STRUCT_SIZE

Minimum size, in bytes, of the internal private structure used to describe I2C commands link.

I2C_LINK_RECOMMENDED_SIZE(TRANSACTIONS)

The following macro is used to determine the recommended size of the buffer to pass to `i2c_cmd_link_create_static()` function. It requires one parameter, `TRANSACTIONS`, describing the number of transactions intended to be performed on the I2C port. For example, if one wants to perform a read on an I2C device register, `TRANSACTIONS` must be at least 2, because the commands required are the following:

- write device register
- read register content

Signals such as "(repeated) start", "stop", "nack", "ack" shall not be counted.

Type Definitions

typedef void ***i2c_cmd_handle_t**

I2C command handle

Header File

- components/hal/include/hal/i2c_types.h

Macros

I2C_CLK_FREQ_MAX

Use the highest speed that is available for the clock source picked by clk_flags.

Type Definitions

typedef int **i2c_port_t**

I2C port number, can be I2C_NUM_0 ~ (I2C_NUM_MAX-1).

Enumerations

enum **i2c_mode_t**

Values:

enumerator **I2C_MODE_SLAVE**

I2C slave mode

enumerator **I2C_MODE_MASTER**

I2C master mode

enumerator **I2C_MODE_MAX**

enum **i2c_rw_t**

Values:

enumerator **I2C_MASTER_WRITE**

I2C write data

enumerator **I2C_MASTER_READ**

I2C read data

enum **i2c_trans_mode_t**

Values:

enumerator **I2C_DATA_MODE_MSB_FIRST**

I2C data msb first

enumerator **I2C_DATA_MODE_LSB_FIRST**

I2C data lsb first

enumerator **I2C_DATA_MODE_MAX**

enum **i2c_addr_mode_t**

Values:

enumerator **I2C_ADDR_BIT_7**

I2C 7bit address for slave mode

enumerator **I2C_ADDR_BIT_10**

I2C 10bit address for slave mode

enumerator **I2C_ADDR_BIT_MAX**

enum **i2c_ack_type_t**

Values:

enumerator **I2C_MASTER_ACK**

I2C ack for each byte read

enumerator **I2C_MASTER_NACK**

I2C nack for each byte read

enumerator **I2C_MASTER_LAST_NACK**

I2C nack for the last byte

enumerator **I2C_MASTER_ACK_MAX**

enum **i2c_sclk_t**

I2C clock source, sorting from smallest to largest, place them in order. This can be expanded in the future use.

Values:

enumerator **I2C_SCLK_DEFAULT**

I2C source clock not selected

enumerator **I2C_SCLK_APB**

I2C source clock from APB, 80M

enumerator **I2C_SCLK_MAX**

enum **i2c_opmode_t**

Values:

enumerator **I2C_CMD_RESTART**

I2C restart command

enumerator **I2C_CMD_WRITE**

I2C write command

enumerator **I2C_CMD_READ**

I2C read command

enumerator **I2C_CMD_STOP**

I2C stop command

enumerator **I2C_CMD_END**

I2C end command

2.3.6 Inter-IC Sound (I2S)

Overview

I2S (Inter-IC Sound) is a serial, synchronous communication protocol that is usually used for transmitting audio data between two digital audio devices.

ESP32 contains two I2S peripheral(s). These peripherals can be configured to input and output sample data via the I2S driver.

An I2S bus consists of the following lines:

- Master clock line (operational)

- Bit clock line
- Channel select line
- Serial data line

Each I2S controller has the following features that can be configured using the I2S driver:

- Operation as system master or slave
- Capable of acting as transmitter or receiver
- DMA controller that allows for streaming sample data without requiring the CPU to copy each data sample

Each controller can operate in half-duplex communication mode. Thus, the two controllers can be combined to establish full-duplex communication.

I2S0 output can be routed directly to the digital-to-analog converter's (DAC) output channels (GPIO 25 & GPIO 26) to produce direct analog output without involving any external I2S codecs. I2S0 can also be used for transmitting PDM (Pulse-density modulation) signals.

The I2S peripherals also support LCD mode for communicating data over a parallel bus, as used by some LCD displays and camera modules. LCD mode has the following operational modes:

- LCD master transmitting mode
- Camera slave receiving mode
- ADC/DAC mode

For more information, see *ESP32 Technical Reference Manual* > *I2S Controller (I2S)* > LCD Mode [PDF].

Note: For high accuracy clock applications, use the APLL_CLK clock source, which has the frequency range of 16 ~ 128 MHz. You can enable the APLL_CLK clock source by setting `i2s_config_t::use_apll` to `TRUE`.

If `i2s_config_t::use_apll` = `TRUE` and `i2s_config_t::fixed_mclk` > `0`, then the master clock output frequency for I2S will be equal to the value of `i2s_config_t::fixed_mclk`, which means that the mclk frequency is provided by the user, instead of being calculated by the driver.

The clock rate of the word select line, which is called audio left-right clock rate (LRCK) here, is always the divisor of the master clock output frequency and for which the following is always true: 0 < MCLK/LRCK/channels/bits_per_sample < 64.

Functional Overview

Installing the Driver Install the I2S driver by calling the function :cpp:func`i2s_driver_install` and passing the following arguments:

- Port number
- The structure *`i2s_config_t`* with defined communication parameters
- Event queue size and handle

Once :cpp:func`i2s_driver_install` returns `ESP_OK`, it means I2S has started.

Configuration example:

```
static const int i2s_num = 0; // i2s port number

i2s_config_t i2s_config = {
    .mode = I2S_MODE_MASTER | I2S_MODE_TX,
    .sample_rate = 44100,
    .bits_per_sample = I2S_BITS_PER_SAMPLE_16BIT,
    .channel_format = I2S_CHANNEL_FMT_RIGHT_LEFT,
    .communication_format = I2S_COMM_FORMAT_STAND_I2S
    .tx_desc_auto_clear = false,
    .dma_buf_count = 8,
    .dma_buf_len = 64,
    .use_apll = false,
```

(continues on next page)

(continued from previous page)

```
    .intr_alloc_flags = ESP_INTR_FLAG_LEVEL1  // Interrupt level 1, default 0
};

i2s_driver_install(I2S_NUM, &i2s_config, 0, NULL);
```

Setting Communication Pins Once the driver is installed, configure physical GPIO pins to which signals will be routed. For this, call the function :cpp:func`i2s_set_pin` and pass the following arguments to it:

- Port number
- The structure *i2s_pin_config_t* defining the GPIO pin numbers to which the driver should route the MCK, BCK, WS, DATA out, and DATA in signals. If you want to keep a currently allocated pin number for a specific signal, or if this signal is unused, then pass the macro *I2S_PIN_NO_CHANGE*. See the example below.

Note: MCK only takes effect in *I2S_MODE_MASTER* mode.

```
static const i2s_pin_config_t pin_config = {
    .mck_io_num = 0,
    .bck_io_num = 4,
    .ws_io_num = 5,
    .data_out_num = 18,
    .data_in_num = I2S_PIN_NO_CHANGE
};

i2s_set_pin(i2s_num, &pin_config);
```

Running I2S Communication To perform a transmission:

- Prepare the data for sending
- Call the function *i2s_write()* and pass the data buffer address and data length to it

The function will write the data to the DMA Tx buffer, and then the data will be transmitted automatically.

```
i2s_write(I2S_NUM, samples_data, ((bits+8)/16)*SAMPLE_PER_CYCLE*4, &i2s_bytes_
↪write, 100);
```

To retrieve received data, use the function *i2s_read()*. It will retrieve the data from the DMA Rx buffer, once the data is received by the I2S controller.

```
i2s_read(I2S_NUM, data_recv, ((bits+8)/16)*SAMPLE_PER_CYCLE*4, &i2s_bytes_read,␣
↪100);
```

You can temporarily stop the I2S driver by calling the function *i2s_stop()*, which will disable the I2S Tx/Rx units until the function *i2s_start()* is called. If the function :cpp:func`i2s_driver_install` is used, the driver will start up automatically eliminating the need to call *i2s_start()*.

Deleting the Driver If the established communication is no longer required, the driver can be removed to free allocated resources by calling *i2s_driver_uninstall()*.

Application Example

A code example for the I2S driver can be found in the directory peripherals/i2s.

In addition, there are two short configuration examples for the I2S driver.

In addition, there is a short configuration examples for the I2S driver.

I2S configuration Example for general usage.

```
#include "driver/i2s.h"

static const int i2s_num = 0; // i2s port number

i2s_config_t i2s_config = {
    .mode = I2S_MODE_MASTER | I2S_MODE_TX,
    .sample_rate = 44100,
    .bits_per_sample = I2S_BITS_PER_SAMPLE_16BIT,
    .channel_format = I2S_CHANNEL_FMT_RIGHT_LEFT,
    .communication_format = I2S_COMM_FORMAT_STAND_I2S
    .tx_desc_auto_clear = false,
    .dma_buf_count = 8,
    .dma_buf_len = 64,
    .use_apll = false,
    .intr_alloc_flags = ESP_INTR_FLAG_LEVEL1  // Interrupt level 1, default 0
};

static const i2s_pin_config_t pin_config = {
    .bck_io_num = 4,
    .ws_io_num = 5,
    .data_out_num = 18,
    .data_in_num = I2S_PIN_NO_CHANGE
};

i2s_driver_install(i2s_num, &i2s_config, 0, NULL);   //install and start i2s driver
i2s_set_pin(i2s_num, &pin_config);

...
/* You can reset parameters by calling 'i2s_set_clk'
 *
 * The low 16 bits are the valid data bits in one chan and the high 16 bits are
 * the total bits in one chan. If high 16 bits is smaller than low 16 bits, it will
 * be set to a same value as low 16 bits.
 */
uint32_t bits_cfg = (I2S_BITS_PER_CHAN_32BIT << 16) | I2S_BITS_PER_SAMPLE_16BIT;
i2s_set_clk(i2s_num, 22050, bits_cfg, I2S_CHANNEL_STEREO);
...

i2s_driver_uninstall(i2s_num); //stop & destroy i2s driver
```

Configuring I2S to use internal DAC for analog output

```
#include "driver/i2s.h"
#include "freertos/queue.h"

static const int i2s_num = 0; // i2s port number

static const i2s_config_t i2s_config = {
    .mode = I2S_MODE_MASTER | I2S_MODE_TX | I2S_MODE_DAC_BUILT_IN,
    .sample_rate = 44100,
    .bits_per_sample = 16, /* the DAC module will only take the 8bits from MSB */
    .channel_format = I2S_CHANNEL_FMT_RIGHT_LEFT,
    .intr_alloc_flags = 0, // default interrupt priority
    .dma_buf_count = 8,
    .dma_buf_len = 64,
    .use_apll = false
};

...
```

(continues on next page)

(continued from previous page)

```
    i2s_driver_install(i2s_num, &i2s_config, 0, NULL);    //install and start i2s␣
↪driver

    i2s_set_pin(i2s_num, NULL); //for internal DAC, this will enable both of the␣
↪internal channels

    //You can call i2s_set_dac_mode to set built-in DAC output mode.
    //i2s_set_dac_mode(I2S_DAC_CHANNEL_BOTH_EN);

    i2s_set_sample_rates(i2s_num, 22050); //set sample rates

    i2s_driver_uninstall(i2s_num); //stop & destroy i2s driver
```

Application Notes

How to Prevent Data Lost For the applications that need a high frequency sample rate, sometimes the massive throughput of receiving data may cause data lost. Users can receive data lost event by registering an event queue handler to the driver during installation:

```
QueueHandle_t evt_que;
i2s_driver_install(i2s_num, &i2s_config, 10, &evt_que);
```

You will receive `I2S_EVENT_RX_Q_OVF` event when there are data lost.

Please follow these steps to prevent data lost:

1. Determine the interrupt interval. Generally, when data lost happened, the interval should be the bigger the better, it can help to reduce the interrupt times, i.e., `dma_buf_len` should be as big as possible while the DMA buffer size won't exceed its maximum value 4092. The relationships are:

   ```
   interrupt_interval(unit: sec) = dma_buf_len / sample_rate
   dma_buffer_size = dma_buf_len * slot_num * data_bit_width / 8 <= 4092
   ```

2. Determine the `dma_buf_count`. The `dma_buf_count` is decided by the max time of `i2s_read` polling cycle, all the received data are supposed to be stored between two `i2s_read`. This cycle can be measured by a timer or an outputting gpio signal. The relationship is:

   ```
   dma_buf_count > polling_cycle / interrupt_interval
   ```

3. Determine the receiving buffer size. The receiving buffer that offered by user in `i2s_read` should be able to take all the data in all dma buffers, that means it should be bigger than the total size of all the dma buffers:

   ```
   recv_buffer_size > dma_buf_count * dma_buffer_size
   ```

For example, if there is an I2S application, and the known values are:

```
sample_rate = 144000 Hz
data_bit_width = 32 bits
slot_num = 2
polling_cycle = 10ms
```

Then the parameters `dma_buf_len`, `dma_buf_count` and `recv_buf_size` can be calculated according to the given known values:

```
dma_buf_len * slot_num * data_bit_width / 8 = dma_buffer_size <= 4092
dma_buf_len <= 511
interrupt_interval = dma_buf_len / sample_rate = 511 / 144000 = 0.003549 s = 3.549␣
↪ms
dma_buf_count > polling_cycle / interrupt_interval = cell(10 / 3.549) = cell(2.
↪818) = 3
recv_buffer_size > dma_buf_count * dma_buffer_size = 3 * 4092 = 12276 bytes
```

To check whether there are data lost, you can offer an event queue handler to the driver during installation:

```
QueueHandle_t evt_que;
i2s_driver_install(i2s_num, &i2s_config, 10, &evt_que);
```

You will receive `I2S_EVENT_RX_Q_OVF` event when there are data lost.

API Reference

Header File

- components/driver/include/driver/i2s.h

Functions

esp_err_t **i2s_set_pin** (*i2s_port_t* i2s_num, const *i2s_pin_config_t* *pin)

Set I2S pin number.

Inside the pin configuration structure, set I2S_PIN_NO_CHANGE for any pin where the current configuration should not be changed.

Note: The I2S peripheral output signals can be connected to multiple GPIO pads. However, the I2S peripheral input signal can only be connected to one GPIO pad.

Note: if *pin is set as NULL, this function will initialize both of the built-in DAC channels by default. if you don't want this to happen and you want to initialize only one of the DAC channels, you can call i2s_set_dac_mode instead.

Parameters

- **i2s_num** –I2S port number
- **pin** –I2S Pin structure, or NULL to set 2-channel 8-bit internal DAC pin configuration (GPIO25 & GPIO26)

Returns

- ESP_OK Success
- ESP_ERR_INVALID_ARG Parameter error
- ESP_FAIL IO error

esp_err_t **i2s_set_pdm_rx_down_sample** (*i2s_port_t* i2s_num, *i2s_pdm_dsr_t* downsample)

Set PDM mode down-sample rate In PDM RX mode, there would be 2 rounds of downsample process in hardware. In the first downsample process, the sampling number can be 16 or 8. In the second downsample process, the sampling number is fixed as 8. So the clock frequency in PDM RX mode would be (fpcm * 64) or (fpcm * 128) accordingly.

Note: After calling this function, it would call i2s_set_clk inside to update the clock frequency. Please call this function after I2S driver has been initialized.

Parameters

- **i2s_num** –I2S port number
- **downsample** –i2s RX down sample rate for PDM mode.

Returns

- ESP_OK Success
- ESP_ERR_INVALID_ARG Parameter error
- ESP_ERR_NO_MEM Out of memory

esp_err_t **i2s_set_pdm_tx_up_sample** (*i2s_port_t* i2s_num, const *i2s_pdm_tx_upsample_cfg_t* *upsample_cfg)

Set TX PDM mode up-sample rate.

Note: If you have set PDM mode while calling 'i2s_driver_install', default PDM TX upsample parameters have already been set, no need to call this function again if you don't have to change the default configuration

---

Parameters

- **i2s_num** –I2S port number
- **upsample_cfg** –Set I2S PDM up-sample rate configuration

Returns

- ESP_OK Success
- ESP_ERR_INVALID_ARG Parameter error
- ESP_ERR_NO_MEM Out of memory

esp_err_t **i2s_driver_install** (*i2s_port_t* i2s_num, const *i2s_config_t* *i2s_config, int queue_size, void *i2s_queue)

Install and start I2S driver.

This function must be called before any I2S driver read/write operations.

Parameters

- **i2s_num** –I2S port number
- **i2s_config** –I2S configurations - see i2s_config_t struct
- **queue_size** –I2S event queue size/depth.
- **i2s_queue** –I2S event queue handle, if set NULL, driver will not use an event queue.

Returns

- ESP_OK Success
- ESP_ERR_INVALID_ARG Parameter error
- ESP_ERR_NO_MEM Out of memory
- ESP_ERR_INVALID_STATE Current I2S port is in use

esp_err_t **i2s_driver_uninstall** (*i2s_port_t* i2s_num)

Uninstall I2S driver.

Parameters **i2s_num** –I2S port number

Returns

- ESP_OK Success
- ESP_ERR_INVALID_ARG Parameter error
- ESP_ERR_INVALID_STATE I2S port has been uninstalled by others (e.g. LCD i80)

esp_err_t **i2s_write** (*i2s_port_t* i2s_num, const void *src, size_t size, size_t *bytes_written, TickType_t ticks_to_wait)

Write data to I2S DMA transmit buffer.

Parameters

- **i2s_num** –I2S port number
- **src** –Source address to write from
- **size** –Size of data in bytes
- **bytes_written** –**[out]** Number of bytes written, if timeout, the result will be less than the size passed in.
- **ticks_to_wait** –TX buffer wait timeout in RTOS ticks. If this many ticks pass without space becoming available in the DMA transmit buffer, then the function will return (note that if the data is written to the DMA buffer in pieces, the overall operation may still take longer than this timeout.) Pass portMAX_DELAY for no timeout.

Returns

- ESP_OK Success

- ESP_ERR_INVALID_ARG Parameter error

esp_err_t **i2s_write_expand**(*i2s_port_t* i2s_num, const void *src, size_t size, size_t src_bits, size_t aim_bits, size_t *bytes_written, TickType_t ticks_to_wait)

Write data to I2S DMA transmit buffer while expanding the number of bits per sample. For example, expanding 16-bit PCM to 32-bit PCM.

Format of the data in source buffer is determined by the I2S configuration (see i2s_config_t).

Parameters

- **i2s_num** –I2S port number
- **src** –Source address to write from
- **size** –Size of data in bytes
- **src_bits** –Source audio bit
- **aim_bits** –Bit wanted, no more than 32, and must be greater than src_bits
- **bytes_written** –**[out]** Number of bytes written, if timeout, the result will be less than the size passed in.
- **ticks_to_wait** –TX buffer wait timeout in RTOS ticks. If this many ticks pass without space becoming available in the DMA transmit buffer, then the function will return (note that if the data is written to the DMA buffer in pieces, the overall operation may still take longer than this timeout.) Pass portMAX_DELAY for no timeout.

Returns

- ESP_OK Success
- ESP_ERR_INVALID_ARG Parameter error

esp_err_t **i2s_read**(*i2s_port_t* i2s_num, void *dest, size_t size, size_t *bytes_read, TickType_t ticks_to_wait)

Read data from I2S DMA receive buffer.

Note: If the built-in ADC mode is enabled, we should call i2s_adc_enable and i2s_adc_disable around the whole reading process, to prevent the data getting corrupted.

Parameters

- **i2s_num** –I2S port number
- **dest** –Destination address to read into
- **size** –Size of data in bytes
- **bytes_read** –**[out]** Number of bytes read, if timeout, bytes read will be less than the size passed in.
- **ticks_to_wait** –RX buffer wait timeout in RTOS ticks. If this many ticks pass without bytes becoming available in the DMA receive buffer, then the function will return (note that if data is read from the DMA buffer in pieces, the overall operation may still take longer than this timeout.) Pass portMAX_DELAY for no timeout.

Returns

- ESP_OK Success
- ESP_ERR_INVALID_ARG Parameter error

esp_err_t **i2s_set_sample_rates**(*i2s_port_t* i2s_num, uint32_t rate)

Set sample rate used for I2S RX and TX.

The bit clock rate is determined by the sample rate and i2s_config_t configuration parameters (number of channels, bits_per_sample).

```
bit_clock = rate * (number of channels) * bits_per_sample
```

Parameters

- **i2s_num** –I2S port number
- **rate** –I2S sample rate (ex: 8000, 44100···)

Returns

- ESP_OK Success

- ESP_ERR_INVALID_ARG Parameter error
- ESP_ERR_NO_MEM Out of memory

esp_err_t **i2s_stop** (*i2s_port_t* i2s_num)

Stop I2S driver.

There is no need to call i2s_stop() before calling i2s_driver_uninstall().

Disables I2S TX/RX, until i2s_start() is called.

Parameters **i2s_num** –I2S port number
Returns
- ESP_OK Success
- ESP_ERR_INVALID_ARG Parameter error

esp_err_t **i2s_start** (*i2s_port_t* i2s_num)

Start I2S driver.

It is not necessary to call this function after i2s_driver_install() (it is started automatically), however it is necessary to call it after i2s_stop().

Parameters **i2s_num** –I2S port number
Returns
- ESP_OK Success
- ESP_ERR_INVALID_ARG Parameter error

esp_err_t **i2s_zero_dma_buffer** (*i2s_port_t* i2s_num)

Zero the contents of the TX DMA buffer.

Pushes zero-byte samples into the TX DMA buffer, until it is full.

Parameters **i2s_num** –I2S port number
Returns
- ESP_OK Success
- ESP_ERR_INVALID_ARG Parameter error

esp_err_t **i2s_set_clk** (*i2s_port_t* i2s_num, uint32_t rate, uint32_t bits_cfg, *i2s_channel_t* ch)

Set clock & bit width used for I2S RX and TX.

Similar to i2s_set_sample_rates(), but also sets bit width.

a. stop i2s;
b. calculate mclk, bck, bck_factor
c. malloc dma buffer;
d. start i2s

Parameters
- **i2s_num** –I2S port number
- **rate** –I2S sample rate (ex: 8000, 44100···)
- **bits_cfg** –I2S bits configuration the low 16 bits is for data bits per sample in one channel (see ‘i2s_bits_per_sample_t’) the high 16 bits is for total bits in one channel (see ‘i2s_bits_per_chan_t’) high 16bits =0 means same as the bits per sample.
- **ch** –I2S channel, (I2S_CHANNEL_MONO, I2S_CHANNEL_STEREO or specific channel in TDM mode)

Returns
- ESP_OK Success
- ESP_ERR_INVALID_ARG Parameter error
- ESP_ERR_NO_MEM Out of memory

float **i2s_get_clk** (*i2s_port_t* i2s_num)

get clock set on particular port number.

Parameters **i2s_num** –I2S port number
Returns
- actual clock set by i2s driver

esp_err_t **i2s_set_adc_mode**(*adc_unit_t* adc_unit, *adc1_channel_t* adc_channel)

Set built-in ADC mode for I2S DMA, this function will initialize ADC pad, and set ADC parameters.

Note: In this mode, the ADC maximum sampling rate is 150KHz. Set the sampling rate through `i2s_config_t`.

Parameters
- **adc_unit** –SAR ADC unit index
- **adc_channel** –ADC channel index

Returns
- ESP_OK Success
- ESP_ERR_INVALID_ARG Parameter error

esp_err_t **i2s_adc_enable**(*i2s_port_t* i2s_num)

Start to use I2S built-in ADC mode.

Note: This function would acquire the lock of ADC to prevent the data getting corrupted during the I2S peripheral is being used to do fully continuous ADC sampling.

Parameters **i2s_num** –i2s port index
Returns
- ESP_OK Success
- ESP_ERR_INVALID_ARG Parameter error
- ESP_ERR_INVALID_STATE Driver state error

esp_err_t **i2s_adc_disable**(*i2s_port_t* i2s_num)

Stop to use I2S built-in ADC mode.

Note: This function would release the lock of ADC so that other tasks can use ADC.

Parameters **i2s_num** –i2s port index
Returns
- ESP_OK Success
- ESP_ERR_INVALID_ARG Parameter error
- ESP_ERR_INVALID_STATE Driver state error

esp_err_t **i2s_set_dac_mode**(*i2s_dac_mode_t* dac_mode)

Set I2S dac mode, I2S built-in DAC is disabled by default.

Note: Built-in DAC functions are only supported on I2S0 for current ESP32 chip. If either of the built-in DAC channel are enabled, the other one can not be used as RTC DAC function at the same time.

Parameters **dac_mode** –DAC mode configurations - see i2s_dac_mode_t
Returns
- ESP_OK Success
- ESP_ERR_INVALID_ARG Parameter error

Structures

struct **i2s_pdm_tx_upsample_cfg_t**

I2S PDM up-sample rate configuration.

Note: TX PDM can only be set to the following two upsampling rate configurations: 1: fp = 960, fs = sample_rate / 100, in this case, Fpdm = 128*48000 2: fp = 960, fs = 480, in this case, Fpdm = 128*Fpcm = 128*sample_rate If the pdm receiver do not care the pdm serial clock, it' s recommended set Fpdm = 128*48000. Otherwise, the second configuration should be applied.

Public Members

int **sample_rate**

I2S PDM sample rate

int **fp**

I2S PDM TX upsampling paramater. Normally it should be set to 960

int **fs**

I2S PDM TX upsampling paramater. When it is set to 480, the pdm clock frequency Fpdm = 128 * sample_rate, when it is set to sample_rate / 100, Fpdm will be fixed to 128*48000

struct **i2s_pin_config_t**

I2S pin number for i2s_set_pin.

Public Members

int **mck_io_num**

MCK in out pin. Note that ESP32 supports setting MCK on GPIO0/GPIO1/GPIO3 only

int **bck_io_num**

BCK in out pin

int **ws_io_num**

WS in out pin

int **data_out_num**

DATA out pin

int **data_in_num**

DATA in pin

struct **i2s_driver_config_t**

I2S driver configuration parameters.

Public Members

i2s_mode_t **mode**

I2S work mode

uint32_t **sample_rate**

I2S sample rate

i2s_bits_per_sample_t **bits_per_sample**

I2S sample bits in one channel

i2s_channel_fmt_t **channel_format**

I2S channel format.

i2s_comm_format_t **communication_format**

I2S communication format

int **intr_alloc_flags**

Flags used to allocate the interrupt. One or multiple (ORred) ESP_INTR_FLAG_* values. See esp_intr_alloc.h for more info

int **dma_buf_count**

The total number of DMA buffers to receive/transmit data. A descriptor includes some information such as buffer address, the address of the next descriptor, and the buffer length. Since one descriptor points to one buffer, therefore, 'dma_desc_num' can be interpreted as the total number of DMA buffers used to store data from DMA interrupt. Notice that these buffers are internal to' i2s_read' and descriptors are created automatically inside of the I2S driver. Users only need to set the buffer number while the length is derived from the parameter described below.

int **dma_buf_len**

Number of frames in a DMA buffer. A frame means the data of all channels in a WS cycle. The real_dma_buf_size = dma_buf_len * chan_num * bits_per_chan / 8. For example, if two channels in stereo mode (i.e., 'channel_format' is set to 'I2S_CHANNEL_FMT_RIGHT_LEFT') are active, and each channel transfers 32 bits (i.e., 'bits_per_sample' is set to 'I2S_BITS_PER_CHAN_32BIT'), then the total number of bytes of a frame is 'channel_format' * 'bits_per_sample' = 2 * 32 / 8 = 8 bytes. We assume that the current 'dma_buf_len' is 100, then the real length of the DMA buffer is 8 * 100 = 800 bytes. Note that the length of an internal real DMA buffer shouldn' t be greater than 4092.

bool **use_apll**

I2S using APLL as main I2S clock, enable it to get accurate clock

bool **tx_desc_auto_clear**

I2S auto clear tx descriptor if there is underflow condition (helps in avoiding noise in case of data unavailability)

int **fixed_mclk**

I2S using fixed MCLK output. If use_apll = true and fixed_mclk > 0, then the clock output for i2s is fixed and equal to the fixed_mclk value. If fixed_mclk set, mclk_multiple won' t take effect

i2s_mclk_multiple_t **mclk_multiple**

The multiple of I2S master clock(MCLK) to sample rate

i2s_bits_per_chan_t **bits_per_chan**

I2S total bits in one channel, only take effect when larger than ‘bits_per_sample’, default ‘0’ means equal to ‘bits_per_sample’

struct **i2s_event_t**

Event structure used in I2S event queue.

Public Members

i2s_event_type_t **type**

I2S event type

size_t **size**

I2S data size for I2S_DATA event

Macros

I2S_PIN_NO_CHANGE

Use in *i2s_pin_config_t* for pins which should not be changed

I2S_PDM_DEFAULT_UPSAMPLE_CONFIG(rate)

Default I2S PDM Up-Sampling Rate configuration.

Type Definitions

typedef *i2s_driver_config_t* **i2s_config_t**

typedef *intr_handle_t* **i2s_isr_handle_t**

Enumerations

enum **i2s_port_t**

I2S port number, the max port number is (I2S_NUM_MAX -1).

Values:

enumerator **I2S_NUM_0**

I2S port 0

enumerator **I2S_NUM_1**

I2S port 1

enumerator **I2S_NUM_MAX**

I2S port max

enum **i2s_event_type_t**

I2S event queue types.

Values:

enumerator **I2S_EVENT_DMA_ERROR**

enumerator **I2S_EVENT_TX_DONE**
I2S DMA finish sent 1 buffer

enumerator **I2S_EVENT_RX_DONE**
I2S DMA finish received 1 buffer

enumerator **I2S_EVENT_TX_Q_OVF**
I2S DMA sent queue overflow

enumerator **I2S_EVENT_RX_Q_OVF**
I2S DMA receive queue overflow

enumerator **I2S_EVENT_MAX**
I2S event max index

Header File

- components/hal/include/hal/i2s_types.h

Enumerations

enum **i2s_bits_per_sample_t**
I2S bit width per sample.

Values:

enumerator **I2S_BITS_PER_SAMPLE_8BIT**
data bit-width: 8

enumerator **I2S_BITS_PER_SAMPLE_16BIT**
data bit-width: 16

enumerator **I2S_BITS_PER_SAMPLE_24BIT**
data bit-width: 24

enumerator **I2S_BITS_PER_SAMPLE_32BIT**
data bit-width: 32

enum **i2s_bits_per_chan_t**
I2S bit width per chan.

Values:

enumerator **I2S_BITS_PER_CHAN_DEFAULT**
channel bit-width equals to data bit-width

enumerator **I2S_BITS_PER_CHAN_8BIT**
channel bit-width: 8

enumerator **I2S_BITS_PER_CHAN_16BIT**
channel bit-width: 16

enumerator **I2S_BITS_PER_CHAN_24BIT**

channel bit-width: 24

enumerator **I2S_BITS_PER_CHAN_32BIT**

channel bit-width: 32

enum **i2s_channel_t**

I2S channel.

Values:

enumerator **I2S_CHANNEL_MONO**

I2S channel (mono), one channel activated. In this mode, you only need to send one channel data but the fifo will copy same data for the other unactivated channels automatically, then both channels will transmit same data.

enumerator **I2S_CHANNEL_STEREO**

I2S channel (stereo), two (or more) channels activated. In this mode, these channels will transmit different data.

enum **i2s_comm_format_t**

I2S communication standard format.

Values:

enumerator **I2S_COMM_FORMAT_STAND_I2S**

I2S communication I2S Philips standard, data launch at second BCK

enumerator **I2S_COMM_FORMAT_STAND_MSB**

I2S communication MSB alignment standard, data launch at first BCK

enumerator **I2S_COMM_FORMAT_STAND_PCM_SHORT**

PCM Short standard, also known as DSP mode. The period of synchronization signal (WS) is 1 bck cycle.

enumerator **I2S_COMM_FORMAT_STAND_PCM_LONG**

PCM Long standard. The period of synchronization signal (WS) is channel_bit*bck cycles.

enumerator **I2S_COMM_FORMAT_STAND_MAX**

standard max

enumerator **I2S_COMM_FORMAT_I2S**

I2S communication format I2S, correspond to `I2S_COMM_FORMAT_STAND_I2S`

enumerator **I2S_COMM_FORMAT_I2S_MSB**

I2S format MSB, (I2S_COMM_FORMAT_I2S |I2S_COMM_FORMAT_I2S_MSB) correspond to `I2S_COMM_FORMAT_STAND_I2S`

enumerator **I2S_COMM_FORMAT_I2S_LSB**

I2S format LSB, (I2S_COMM_FORMAT_I2S |I2S_COMM_FORMAT_I2S_LSB) correspond to `I2S_COMM_FORMAT_STAND_MSB`

enumerator **I2S_COMM_FORMAT_PCM**

I2S communication format PCM, correspond to `I2S_COMM_FORMAT_STAND_PCM_SHORT`

enumerator **I2S_COMM_FORMAT_PCM_SHORT**

PCM Short, (I2S_COMM_FORMAT_PCM | I2S_COMM_FORMAT_PCM_SHORT) correspond to `I2S_COMM_FORMAT_STAND_PCM_SHORT`

enumerator **I2S_COMM_FORMAT_PCM_LONG**

PCM Long, (I2S_COMM_FORMAT_PCM | I2S_COMM_FORMAT_PCM_LONG) correspond to `I2S_COMM_FORMAT_STAND_PCM_LONG`

enum **i2s_channel_fmt_t**

I2S channel format type.

Values:

enumerator **I2S_CHANNEL_FMT_RIGHT_LEFT**

Separated left and right channel

enumerator **I2S_CHANNEL_FMT_ALL_RIGHT**

Load right channel data in both two channels

enumerator **I2S_CHANNEL_FMT_ALL_LEFT**

Load left channel data in both two channels

enumerator **I2S_CHANNEL_FMT_ONLY_RIGHT**

Only load data in right channel (mono mode)

enumerator **I2S_CHANNEL_FMT_ONLY_LEFT**

Only load data in left channel (mono mode)

enum **i2s_mode_t**

I2S Mode.

Values:

enumerator **I2S_MODE_MASTER**

Master mode

enumerator **I2S_MODE_SLAVE**

Slave mode

enumerator **I2S_MODE_TX**

TX mode

enumerator **I2S_MODE_RX**

RX mode

enumerator **I2S_MODE_DAC_BUILT_IN**

Output I2S data to built-in DAC, no matter the data format is 16bit or 32 bit, the DAC module will only take the 8bits from MSB

enumerator **I2S_MODE_ADC_BUILT_IN**

Input I2S data from built-in ADC, each data can be 12-bit width at most

enumerator **I2S_MODE_PDM**

I2S PDM mode

enum **i2s_clock_src_t**

I2S source clock.

Values:

enumerator **I2S_CLK_D2CLK**

Clock from PLL_D2_CLK(160M)

enumerator **I2S_CLK_APLL**

Clock from APLL

enum **i2s_mclk_multiple_t**

The multiple of mclk to sample rate.

Values:

enumerator **I2S_MCLK_MULTIPLE_DEFAULT**

Default value. mclk = sample_rate * 256

enumerator **I2S_MCLK_MULTIPLE_128**

mclk = sample_rate * 128

enumerator **I2S_MCLK_MULTIPLE_256**

mclk = sample_rate * 256

enumerator **I2S_MCLK_MULTIPLE_384**

mclk = sample_rate * 384

enum **i2s_dac_mode_t**

I2S DAC mode for i2s_set_dac_mode.

Note: Built-in DAC functions are only supported on I2S0 for current ESP32 chip.

Values:

enumerator **I2S_DAC_CHANNEL_DISABLE**

Disable I2S built-in DAC signals

enumerator **I2S_DAC_CHANNEL_RIGHT_EN**

Enable I2S built-in DAC right channel, maps to DAC channel 1 on GPIO25

enumerator **I2S_DAC_CHANNEL_LEFT_EN**

Enable I2S built-in DAC left channel, maps to DAC channel 2 on GPIO26

enumerator **I2S_DAC_CHANNEL_BOTH_EN**

Enable both of the I2S built-in DAC channels.

enumerator **I2S_DAC_CHANNEL_MAX**

I2S built-in DAC mode max index

enum **i2s_pdm_dsr_t**

I2S PDM RX downsample mode.

Values:

enumerator **I2S_PDM_DSR_8S**

downsampling number is 8 for PDM RX mode

enumerator **I2S_PDM_DSR_16S**

downsampling number is 16 for PDM RX mode

enumerator **I2S_PDM_DSR_MAX**

enum **i2s_pdm_sig_scale_t**

Values:

enumerator **I2S_PDM_SIG_SCALING_DIV_2**

I2S TX PDM sigmadelta signal scaling: /2

enumerator **I2S_PDM_SIG_SCALING_MUL_1**

I2S TX PDM sigmadelta signal scaling: x1

enumerator **I2S_PDM_SIG_SCALING_MUL_2**

I2S TX PDM sigmadelta signal scaling: x2

enumerator **I2S_PDM_SIG_SCALING_MUL_4**

I2S TX PDM sigmadelta signal scaling: x4

2.3.7 LCD

Introduction

ESP chips can generate various kinds of timings that needed by common LCDs on the market, like SPI LCD, I80 LCD (a.k.a Intel 8080 parallel LCD), RGB LCD, I2C LCD, etc. The `esp_lcd` component is officially to support those LCDs with a group of universal APIs across chips.

Functional Overview

In `esp_lcd`, an LCD panel is represented by `esp_lcd_panel_handle_t`, which plays the role of an **abstract frame buffer**, regardless of the frame memory is allocated inside ESP chip or in external LCD controller. Based on the location of the frame buffer, the LCD panel allocation functions are mainly grouped into the following categories:

- `RGB LCD panel` - is simply based on a group of specific synchronous signals indicating where to start and stop a frame.

- `Controller based LCD panel` involves multiple steps to get a panel handle, like bus allocation, IO device registration and controller driver install.

After we get the LCD handle, the remaining LCD operations are the same for different LCD interfaces and vendors.

Application Example

LCD examples are located under: peripherals/lcd:

- Jpeg decoding and LCD display - peripherals/lcd/tjpgd
- LVGL porting and animation UI - peripherals/lcd/lvgl

API Reference

Header File

- components/hal/include/hal/lcd_types.h

Enumerations

enum **lcd_clock_source_t**

LCD clock source.

Note: User should select the clock source based on the real requirement:

LCD clock source	Features	Power Management
LCD_CLK_SRC_PLL160M	High resolution	ESP_PM_APB_FREQ_MAX lock
LCD_CLK_SRC_PLL240M	High resolution	ESP_PM_APB_FREQ_MAX lock
LCD_CLK_SRC_APLL	Configurable resolution	ESP_PM_NO_LIGHT_SLEEP lock
LCD_CLK_SRC_XTAL	Medium resolution	No PM lock

Values:

enumerator **LCD_CLK_SRC_PLL160M**

Select PLL160M as the source clock

enumerator **LCD_CLK_SRC_PLL240M**

Select PLL240M as the source clock

enumerator **LCD_CLK_SRC_APLL**

Select APLL as the source clock

enumerator **LCD_CLK_SRC_XTAL**

Select XTAL as the source clock

enum **lcd_color_space_t**

LCD color space.

Values:

enumerator **LCD_COLOR_SPACE_RGB**

Color space: RGB

enumerator **LCD_COLOR_SPACE_YUV**

Color space: YUV

enum **lcd_color_range_t**

LCD color range.

Values:

enumerator **LCD_COLOR_RANGE_LIMIT**

Limited color range

enumerator **LCD_COLOR_RANGE_FULL**

Full color range

enum **lcd_yuv_sample_t**

YUV sampling method.

Values:

enumerator **LCD_YUV_SAMPLE_422**

YUV 4:2:2 sampling

enumerator **LCD_YUV_SAMPLE_420**

YUV 4:2:0 sampling

enumerator **LCD_YUV_SAMPLE_411**

YUV 4:1:1 sampling

enum **lcd_yuv_conv_std_t**

The standard used for conversion between RGB and YUV.

Values:

enumerator **LCD_YUV_CONV_STD_BT601**

YUV<->RGB conversion standard: BT.601

enumerator **LCD_YUV_CONV_STD_BT709**

YUV<->RGB conversion standard: BT.709

Header File

- components/esp_lcd/include/esp_lcd_types.h

Type Definitions

typedef struct esp_lcd_panel_io_t ***esp_lcd_panel_io_handle_t**

Type of LCD panel IO handle

typedef struct esp_lcd_panel_t ***esp_lcd_panel_handle_t**

Type of LCD panel handle

Enumerations

enum **esp_lcd_color_space_t**

LCD color space type definition.

Values:

enumerator **ESP_LCD_COLOR_SPACE_RGB**

Color space: RGB

enumerator **ESP_LCD_COLOR_SPACE_BGR**

Color space: BGR

enumerator **ESP_LCD_COLOR_SPACE_MONOCHROME**

Color space: monochrome

Header File

- components/esp_lcd/include/esp_lcd_panel_io.h

Functions

esp_err_t **esp_lcd_panel_io_rx_param**(*esp_lcd_panel_io_handle_t* io, int lcd_cmd, void *param, size_t param_size)

Transmit LCD command and receive corresponding parameters.

Note: Commands sent by this function are short, so they are sent using polling transactions. The function does not return before the command tranfer is completed. If any queued transactions sent by `esp_lcd_panel_io_tx_color()` are still pending when this function is called, this function will wait until they are finished and the queue is empty before sending the command(s).

Parameters

- **io** –**[in]** LCD panel IO handle, which is created by other factory API like `esp_lcd_new_panel_io_spi()`
- **lcd_cmd** –**[in]** The specific LCD command, set to -1 if no command needed
- **param** –**[out]** Buffer for the command data
- **param_size** –**[in]** Size of `param` buffer

Returns

- ESP_ERR_INVALID_ARG if parameter is invalid
- ESP_ERR_NOT_SUPPORTED if read is not supported by transport
- ESP_OK on success

esp_err_t **esp_lcd_panel_io_tx_param**(*esp_lcd_panel_io_handle_t* io, int lcd_cmd, const void *param, size_t param_size)

Transmit LCD command and corresponding parameters.

Note: Commands sent by this function are short, so they are sent using polling transactions. The function does not return before the command tranfer is completed. If any queued transactions sent by `esp_lcd_panel_io_tx_color()` are still pending when this function is called, this function will wait until they are finished and the queue is empty before sending the command(s).

Parameters

- **io** –**[in]** LCD panel IO handle, which is created by other factory API like `esp_lcd_new_panel_io_spi()`

- **lcd_cmd** –**[in]** The specific LCD command (set to -1 if no command needed - only in SPI and I2C)
- **param** –**[in]** Buffer that holds the command specific parameters, set to NULL if no parameter is needed for the command
- **param_size** –**[in]** Size of `param` in memory, in bytes, set to zero if no parameter is needed for the command

Returns

- ESP_ERR_INVALID_ARG if parameter is invalid
- ESP_OK on success

esp_err_t **esp_lcd_panel_io_tx_color**(*esp_lcd_panel_io_handle_t* io, int lcd_cmd, const void *color, size_t color_size)

Transmit LCD RGB data.

Note: This function will package the command and RGB data into a transaction, and push into a queue. The real transmission is performed in the background (DMA+interrupt). The caller should take care of the lifecycle of the `color` buffer. Recycling of color buffer should be done in the callback `on_color_trans_done()`.

Parameters

- **io** –**[in]** LCD panel IO handle, which is created by factory API like `esp_lcd_new_panel_io_spi()`
- **lcd_cmd** –**[in]** The specific LCD command
- **color** –**[in]** Buffer that holds the RGB color data
- **color_size** –**[in]** Size of `color` in memory, in bytes

Returns

- ESP_ERR_INVALID_ARG if parameter is invalid
- ESP_OK on success

esp_err_t **esp_lcd_panel_io_del**(*esp_lcd_panel_io_handle_t* io)

Destory LCD panel IO handle (deinitialize panel and free all corresponding resource)

Parameters **io** –**[in]** LCD panel IO handle, which is created by factory API like `esp_lcd_new_panel_io_spi()`

Returns

- ESP_ERR_INVALID_ARG if parameter is invalid
- ESP_OK on success

esp_err_t **esp_lcd_new_panel_io_spi**(*esp_lcd_spi_bus_handle_t* bus, const *esp_lcd_panel_io_spi_config_t* *io_config, *esp_lcd_panel_io_handle_t* *ret_io)

Create LCD panel IO handle, for SPI interface.

Parameters

- **bus** –**[in]** SPI bus handle
- **io_config** –**[in]** IO configuration, for SPI interface
- **ret_io** –**[out]** Returned IO handle

Returns

- ESP_ERR_INVALID_ARG if parameter is invalid
- ESP_ERR_NO_MEM if out of memory
- ESP_OK on success

esp_err_t **esp_lcd_new_panel_io_i2c**(*esp_lcd_i2c_bus_handle_t* bus, const *esp_lcd_panel_io_i2c_config_t* *io_config, *esp_lcd_panel_io_handle_t* *ret_io)

Create LCD panel IO handle, for I2C interface.

Parameters

- **bus** –**[in]** I2C bus handle
- **io_config** –**[in]** IO configuration, for I2C interface

- **ret_io** –**[out]** Returned IO handle

Returns

- ESP_ERR_INVALID_ARG if parameter is invalid
- ESP_ERR_NO_MEM if out of memory
- ESP_OK on success

esp_err_t **esp_lcd_new_i80_bus**(const *esp_lcd_i80_bus_config_t* *bus_config, *esp_lcd_i80_bus_handle_t* *ret_bus)

Create Intel 8080 bus handle.

Parameters

- **bus_config** –**[in]** Bus configuration
- **ret_bus** –**[out]** Returned bus handle

Returns

- ESP_ERR_INVALID_ARG if parameter is invalid
- ESP_ERR_NO_MEM if out of memory
- ESP_ERR_NOT_FOUND if no free bus is available
- ESP_OK on success

esp_err_t **esp_lcd_del_i80_bus**(*esp_lcd_i80_bus_handle_t* bus)

Destory Intel 8080 bus handle.

Parameters **bus** –**[in]** Intel 8080 bus handle, created by `esp_lcd_new_i80_bus()`

Returns

- ESP_ERR_INVALID_ARG if parameter is invalid
- ESP_ERR_INVALID_STATE if there still be some device attached to the bus
- ESP_OK on success

esp_err_t **esp_lcd_new_panel_io_i80**(*esp_lcd_i80_bus_handle_t* bus, const *esp_lcd_panel_io_i80_config_t* *io_config, *esp_lcd_panel_io_handle_t* *ret_io)

Create LCD panel IO, for Intel 8080 interface.

Parameters

- **bus** –**[in]** Intel 8080 bus handle, created by `esp_lcd_new_i80_bus()`
- **io_config** –**[in]** IO configuration, for i80 interface
- **ret_io** –**[out]** Returned panel IO handle

Returns

- ESP_ERR_INVALID_ARG if parameter is invalid
- ESP_ERR_NOT_SUPPORTED if some configuration can't be satisfied, e.g. pixel clock out of the range
- ESP_ERR_NO_MEM if out of memory
- ESP_OK on success

Structures

struct **esp_lcd_panel_io_event_data_t**

Type of LCD panel IO event data.

struct **esp_lcd_panel_io_spi_config_t**

Panel IO configuration structure, for SPI interface.

Public Members

int **cs_gpio_num**

GPIO used for CS line

int **dc_gpio_num**

GPIO used to select the D/C line, set this to -1 if the D/C line not controlled by manually pulling high/low GPIO

int **spi_mode**

Traditional SPI mode (0~3)

unsigned int **pclk_hz**

Frequency of pixel clock

size_t **trans_queue_depth**

Size of internal transaction queue

esp_lcd_panel_io_color_trans_done_cb_t **on_color_trans_done**

Callback invoked when color data transfer has finished

void ***user_ctx**

User private data, passed directly to on_color_trans_done’ s user_ctx

int **lcd_cmd_bits**

Bit-width of LCD command

int **lcd_param_bits**

Bit-width of LCD parameter

unsigned int **dc_as_cmd_phase**

D/C line value is encoded into SPI transaction command phase

unsigned int **dc_low_on_data**

If this flag is enabled, DC line = 0 means transfer data, DC line = 1 means transfer command; vice versa

unsigned int **octal_mode**

transmit with octal mode (8 data lines), this mode is used to simulate Intel 8080 timing

unsigned int **lsb_first**

transmit LSB bit first

struct *esp_lcd_panel_io_spi_config_t*::[anonymous] **flags**

Extra flags to fine-tune the SPI device

struct **esp_lcd_panel_io_i2c_config_t**

Panel IO configuration structure, for I2C interface.

Public Members

uint32_t **dev_addr**

I2C device address

esp_lcd_panel_io_color_trans_done_cb_t **on_color_trans_done**

Callback invoked when color data transfer has finished

void ***user_ctx**

User private data, passed directly to on_color_trans_done’s user_ctx

size_t **control_phase_bytes**

I2C LCD panel will encode control information (e.g. D/C seclection) into control phase, in several bytes

unsigned int **dc_bit_offset**

Offset of the D/C selection bit in control phase

int **lcd_cmd_bits**

Bit-width of LCD command

int **lcd_param_bits**

Bit-width of LCD parameter

unsigned int **dc_low_on_data**

If this flag is enabled, DC line = 0 means transfer data, DC line = 1 means transfer command; vice versa

unsigned int **disable_control_phase**

If this flag is enabled, the control phase isn’t used

struct *esp_lcd_panel_io_i2c_config_t*::[anonymous] **flags**

Extra flags to fine-tune the I2C device

struct **esp_lcd_i80_bus_config_t**

LCD Intel 8080 bus configuration structure.

Public Members

int **dc_gpio_num**

GPIO used for D/C line

int **wr_gpio_num**

GPIO used for WR line

lcd_clock_source_t **clk_src**

Clock source for the I80 LCD peripheral

int **data_gpio_nums**[(24)]

GPIOs used for data lines

size_t **bus_width**

Number of data lines, 8 or 16

size_t **max_transfer_bytes**

Maximum transfer size, this determines the length of internal DMA link

size_t **psram_trans_align**

DMA transfer alignment for data allocated from PSRAM

size_t **sram_trans_align**

DMA transfer alignment for data allocated from SRAM

struct **esp_lcd_panel_io_i80_config_t**

Panel IO configuration structure, for intel 8080 interface.

Public Members

int **cs_gpio_num**

GPIO used for CS line, set to -1 will declaim exclusively use of I80 bus

unsigned int **pclk_hz**

Frequency of pixel clock

size_t **trans_queue_depth**

Transaction queue size, larger queue, higher throughput

esp_lcd_panel_io_color_trans_done_cb_t **on_color_trans_done**

Callback invoked when color data was tranferred done

void ***user_ctx**

User private data, passed directly to on_color_trans_done’s user_ctx

int **lcd_cmd_bits**

Bit-width of LCD command

int **lcd_param_bits**

Bit-width of LCD parameter

unsigned int **dc_idle_level**

Level of DC line in IDLE phase

unsigned int **dc_cmd_level**

Level of DC line in CMD phase

unsigned int **dc_dummy_level**

Level of DC line in DUMMY phase

unsigned int **dc_data_level**

Level of DC line in DATA phase

struct *esp_lcd_panel_io_i80_config_t*::[anonymous] **dc_levels**

Each i80 device might have its own D/C control logic

unsigned int **cs_active_high**

If set, a high level of CS line will select the device, otherwise, CS line is low level active

unsigned int **reverse_color_bits**

Reverse the data bits, D[N:0] -> D[0:N]

unsigned int **swap_color_bytes**

Swap adjacent two color bytes

unsigned int **pclk_active_neg**

The display will write data lines when there ' s a falling edge on WR signal (a.k.a the PCLK)

unsigned int **pclk_idle_low**

The WR signal (a.k.a the PCLK) stays at low level in IDLE phase

struct *esp_lcd_panel_io_i80_config_t*::[anonymous] **flags**

Panel IO config flags

Type Definitions

typedef void ***esp_lcd_spi_bus_handle_t**

Type of LCD SPI bus handle

typedef void ***esp_lcd_i2c_bus_handle_t**

Type of LCD I2C bus handle

typedef struct esp_lcd_i80_bus_t ***esp_lcd_i80_bus_handle_t**

Type of LCD intel 8080 bus handle

typedef bool (***esp_lcd_panel_io_color_trans_done_cb_t**)(*esp_lcd_panel_io_handle_t* panel_io, *esp_lcd_panel_io_event_data_t* *edata, void *user_ctx)

Declare the prototype of the function that will be invoked when panel IO finishes transferring color data.

Param panel_io [in] LCD panel IO handle, which is created by factory API like `esp_lcd_new_panel_io_spi()`
Param edata [in] Panel IO event data, fed by driver
Param user_ctx [in] User data, passed from `esp_lcd_panel_io_xxx_config_t`
Return Whether a high priority task has been waken up by this function

Header File

- components/esp_lcd/include/esp_lcd_panel_ops.h

Functions

esp_err_t **esp_lcd_panel_reset**(*esp_lcd_panel_handle_t* panel)

Reset LCD panel.

Note: Panel reset must be called before attempting to initialize the panel using `esp_lcd_panel_init()`.

Parameters **panel** –**[in]** LCD panel handle, which is created by other factory API like `esp_lcd_new_panel_st7789()`

Returns

- ESP_OK on success

esp_err_t **esp_lcd_panel_init**(*esp_lcd_panel_handle_t* panel)

Initialize LCD panel.

Note: Before calling this function, make sure the LCD panel has finished the `reset` stage by `esp_lcd_panel_reset()`.

Parameters **panel** –**[in]** LCD panel handle, which is created by other factory API like `esp_lcd_new_panel_st7789()`

Returns

- ESP_OK on success

esp_err_t **esp_lcd_panel_del**(*esp_lcd_panel_handle_t* panel)

Deinitialize the LCD panel.

Parameters **panel** –**[in]** LCD panel handle, which is created by other factory API like `esp_lcd_new_panel_st7789()`

Returns

- ESP_OK on success

esp_err_t **esp_lcd_panel_draw_bitmap**(*esp_lcd_panel_handle_t* panel, int x_start, int y_start, int x_end, int y_end, const void *color_data)

Draw bitmap on LCD panel.

Parameters

- **panel** –**[in]** LCD panel handle, which is created by other factory API like `esp_lcd_new_panel_st7789()`
- **x_start** –**[in]** Start index on x-axis (x_start included)
- **y_start** –**[in]** Start index on y-axis (y_start included)
- **x_end** –**[in]** End index on x-axis (x_end not included)
- **y_end** –**[in]** End index on y-axis (y_end not included)
- **color_data** –**[in]** RGB color data that will be dumped to the specific window range

Returns

- ESP_OK on success

esp_err_t **esp_lcd_panel_mirror**(*esp_lcd_panel_handle_t* panel, bool mirror_x, bool mirror_y)

Mirror the LCD panel on specific axis.

Note: Combined with `esp_lcd_panel_swap_xy()`, one can realize screen rotation

Parameters

- **panel** –**[in]** LCD panel handle, which is created by other factory API like `esp_lcd_new_panel_st7789()`
- **mirror_x** –**[in]** Whether the panel will be mirrored about the x axis
- **mirror_y** –**[in]** Whether the panel will be mirrored about the y axis

Returns

- ESP_OK on success
- ESP_ERR_NOT_SUPPORTED if this function is not supported by the panel

esp_err_t **esp_lcd_panel_swap_xy**(*esp_lcd_panel_handle_t* panel, bool swap_axes)

Swap/Exchange x and y axis.

Note: Combined with `esp_lcd_panel_mirror()`, one can realize screen rotation

Parameters

- **`panel`** –**[in]** LCD panel handle, which is created by other factory API like `esp_lcd_new_panel_st7789()`
- **`swap_axes`** –**[in]** Whether to swap the x and y axis

Returns

- ESP_OK on success
- ESP_ERR_NOT_SUPPORTED if this function is not supported by the panel

esp_err_t **`esp_lcd_panel_set_gap`**(*esp_lcd_panel_handle_t* panel, int x_gap, int y_gap)

Set extra gap in x and y axis.

The gap is the space (in pixels) between the left/top sides of the LCD panel and the first row/column respectively of the actual contents displayed.

Note: Setting a gap is useful when positioning or centering a frame that is smaller than the LCD.

Parameters

- **`panel`** –**[in]** LCD panel handle, which is created by other factory API like `esp_lcd_new_panel_st7789()`
- **`x_gap`** –**[in]** Extra gap on x axis, in pixels
- **`y_gap`** –**[in]** Extra gap on y axis, in pixels

Returns

- ESP_OK on success

esp_err_t **`esp_lcd_panel_invert_color`**(*esp_lcd_panel_handle_t* panel, bool invert_color_data)

Invert the color (bit-wise invert the color data line)

Parameters

- **`panel`** –**[in]** LCD panel handle, which is created by other factory API like `esp_lcd_new_panel_st7789()`
- **`invert_color_data`** –**[in]** Whether to invert the color data

Returns

- ESP_OK on success

esp_err_t **`esp_lcd_panel_disp_off`**(*esp_lcd_panel_handle_t* panel, bool off)

Turn off the display.

Parameters

- **`panel`** –**[in]** LCD panel handle, which is created by other factory API like `esp_lcd_new_panel_st7789()`
- **`off`** –**[in]** Whether to turn off the screen

Returns

- ESP_OK on success
- ESP_ERR_NOT_SUPPORTED if this function is not supported by the panel

Header File

- components/esp_lcd/include/esp_lcd_panel_rgb.h

Header File

- components/esp_lcd/include/esp_lcd_panel_vendor.h

Functions

esp_err_t **esp_lcd_new_panel_st7789**(const *esp_lcd_panel_io_handle_t* io, const *esp_lcd_panel_dev_config_t* *panel_dev_config, *esp_lcd_panel_handle_t* *ret_panel)

Create LCD panel for model ST7789.

Parameters

- **io** –**[in]** LCD panel IO handle
- **panel_dev_config** –**[in]** general panel device configuration
- **ret_panel** –**[out]** Returned LCD panel handle

Returns

- ESP_ERR_INVALID_ARG if parameter is invalid
- ESP_ERR_NO_MEM if out of memory
- ESP_OK on success

esp_err_t **esp_lcd_new_panel_nt35510**(const *esp_lcd_panel_io_handle_t* io, const *esp_lcd_panel_dev_config_t* *panel_dev_config, *esp_lcd_panel_handle_t* *ret_panel)

Create LCD panel for model NT35510.

Parameters

- **io** –**[in]** LCD panel IO handle
- **panel_dev_config** –**[in]** general panel device configuration
- **ret_panel** –**[out]** Returned LCD panel handle

Returns

- ESP_ERR_INVALID_ARG if parameter is invalid
- ESP_ERR_NO_MEM if out of memory
- ESP_OK on success

esp_err_t **esp_lcd_new_panel_ssd1306**(const *esp_lcd_panel_io_handle_t* io, const *esp_lcd_panel_dev_config_t* *panel_dev_config, *esp_lcd_panel_handle_t* *ret_panel)

Create LCD panel for model SSD1306.

Parameters

- **io** –**[in]** LCD panel IO handle
- **panel_dev_config** –**[in]** general panel device configuration
- **ret_panel** –**[out]** Returned LCD panel handle

Returns

- ESP_ERR_INVALID_ARG if parameter is invalid
- ESP_ERR_NO_MEM if out of memory
- ESP_OK on success

Structures

struct **esp_lcd_panel_dev_config_t**

Configuration structure for panel device.

Public Members

int **reset_gpio_num**

GPIO used to reset the LCD panel, set to -1 if it' s not used

esp_lcd_color_space_t **color_space**

Set the color space used by the LCD panel

unsigned int **bits_per_pixel**

Color depth, in bpp

unsigned int **reset_active_high**

Setting this if the panel reset is high level active

struct *esp_lcd_panel_dev_config_t*::[anonymous] **flags**

LCD panel config flags

void ***vendor_config**

vendor specific configuration, optional, left as NULL if not used

2.3.8 LED Control (LEDC)

Introduction

The LED control (LEDC) peripheral is primarily designed to control the intensity of LEDs, although it can also be used to generate PWM signals for other purposes. It has 16 channels which can generate independent waveforms that can be used, for example, to drive RGB LED devices.

LEDC channels are divided into two groups of 8 channels each. One group of LEDC channels operates in high speed mode. This mode is implemented in hardware and offers automatic and glitch-free changing of the PWM duty cycle. The other group of channels operate in low speed mode, the PWM duty cycle must be changed by the driver in software. Each group of channels is also able to use different clock sources.

The PWM controller can automatically increase or decrease the duty cycle gradually, allowing for fades without any processor interference.

Functionality Overview

Setting up a channel of the LEDC in either *high or low speed mode* is done in three steps:

1. *Timer Configuration* by specifying the PWM signal's frequency and duty cycle resolution.
2. *Channel Configuration* by associating it with the timer and GPIO to output the PWM signal.
3. *Change PWM Signal* that drives the output in order to change LED's intensity. This can be done under the full control of software or with hardware fading functions.

As an optional step, it is also possible to set up an interrupt on fade end.

Timer Configuration Setting the timer is done by calling the function `ledc_timer_config()` and passing the data structure `ledc_timer_config_t` that contains the following configuration settings:

- Speed mode `ledc_mode_t`
- Timer number `ledc_timer_t`
- PWM signal frequency
- Resolution of PWM duty

The frequency and the duty resolution are interdependent. The higher the PWM frequency, the lower the duty resolution which is available, and vice versa. This relationship might be important if you are planning to use this API for purposes other than changing the intensity of LEDs. For more details, see Section *Supported Range of Frequency and Duty Resolutions*.

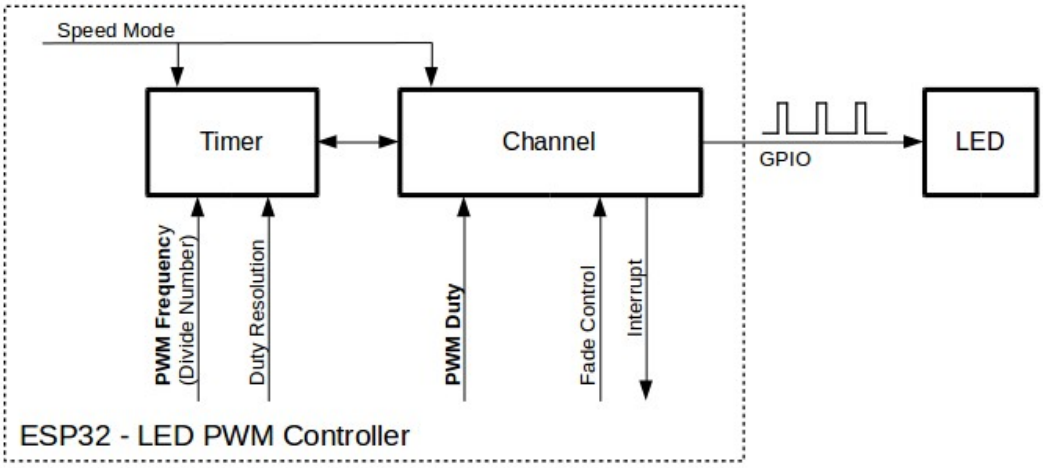

Fig. 11: Key Settings of LED PWM Controller's API

Channel Configuration When the timer is set up, configure the desired channel (one out of `ledc_channel_t`). This is done by calling the function `ledc_channel_config()`.

Similar to the timer configuration, the channel setup function should be passed a structure `ledc_channel_config_t` that contains the channel's configuration parameters.

At this point, the channel should start operating and generating the PWM signal on the selected GPIO, as configured in `ledc_channel_config_t`, with the frequency specified in the timer settings and the given duty cycle. The channel operation (signal generation) can be suspended at any time by calling the function `ledc_stop()`.

Change PWM Signal Once the channel starts operating and generating the PWM signal with the constant duty cycle and frequency, there are a couple of ways to change this signal. When driving LEDs, primarily the duty cycle is changed to vary the light intensity.

The following two sections describe how to change the duty cycle using software and hardware fading. If required, the signal's frequency can also be changed; it is covered in Section *Change PWM Frequency*.

Change PWM Duty Cycle Using Software To set the duty cycle, use the dedicated function `ledc_set_duty()`. After that, call `ledc_update_duty()` to activate the changes. To check the currently set value, use the corresponding `_get_` function `ledc_get_duty()`.

Another way to set the duty cycle, as well as some other channel parameters, is by calling `ledc_channel_config()` covered in Section *Channel Configuration*.

The range of the duty cycle values passed to functions depends on selected `duty_resolution` and should be from `0` to `(2 ** duty_resolution) - 1`. For example, if the selected duty resolution is 10, then the duty cycle values can range from 0 to 1023. This provides the resolution of ~0.1%.

Change PWM Duty Cycle using Hardware The LEDC hardware provides the means to gradually transition from one duty cycle value to another. To use this functionality, enable fading with `ledc_fade_func_install()` and then configure it by calling one of the available fading functions:

- `ledc_set_fade_with_time()`
- `ledc_set_fade_with_step()`
- `ledc_set_fade()`

Finally start fading with *ledc_fade_start()*.

If not required anymore, fading and an associated interrupt can be disabled with *ledc_fade_func_uninstall()*.

Change PWM Frequency The LEDC API provides several ways to change the PWM frequency "on the fly":

- Set the frequency by calling *ledc_set_freq()*. There is a corresponding function *ledc_get_freq()* to check the current frequency.
- Change the frequency and the duty resolution by calling *ledc_bind_channel_timer()* to bind some other timer to the channel.
- Change the channel's timer by calling *ledc_channel_config()*.

More Control Over PWM There are several lower level timer-specific functions that can be used to change PWM settings:

- *ledc_timer_set()*
- *ledc_timer_rst()*
- *ledc_timer_pause()*
- *ledc_timer_resume()*

The first two functions are called "behind the scenes" by *ledc_channel_config()* to provide a startup of a timer after it is configured.

Use Interrupts When configuring an LEDC channel, one of the parameters selected within *ledc_channel_config_t* is *ledc_intr_type_t* which triggers an interrupt on fade completion.

For registration of a handler to address this interrupt, call *ledc_isr_register()*.

LEDC High and Low Speed Mode

High speed mode enables a glitch-free changeover of timer settings. This means that if the timer settings are modified, the changes will be applied automatically on the next overflow interrupt of the timer. In contrast, when updating the low-speed timer, the change of settings should be explicitly triggered by software. The LEDC driver handles it in the background, e.g., when *ledc_timer_config()* or *ledc_timer_set()* is called.

For additional details regarding speed modes, see *ESP32 Technical Reference Manual > LED PWM Controller (LEDC)* [PDF]. Please note that the support for `SLOW_CLOCK` mentioned in this manual is not yet supported in the LEDC driver.

Supported Range of Frequency and Duty Resolutions

The LED PWM Controller is designed primarily to drive LEDs. It provides a large flexibility of PWM duty cycle settings. For instance, the PWM frequency of 5 kHz can have the maximum duty resolution of 13 bits. This means that the duty can be set anywhere from 0 to 100% with a resolution of ~0.012% (2 ** 13 = 8192 discrete levels of the LED intensity). Note, however, that these parameters depend on the clock signal clocking the LED PWM Controller timer which in turn clocks the channel (see *timer configuration* and the *ESP32 Technical Reference Manual > LED PWM Controller (LEDC)* [PDF]).

The LEDC can be used for generating signals at much higher frequencies that are sufficient enough to clock other devices, e.g., a digital camera module. In this case, the maximum available frequency is 40 MHz with duty resolution of 1 bit. This means that the duty cycle is fixed at 50% and cannot be adjusted.

The LEDC API is designed to report an error when trying to set a frequency and a duty resolution that exceed the range of LEDC's hardware. For example, an attempt to set the frequency to 20 MHz and the duty resolution to 3 bits will result in the following error reported on a serial monitor:

```
E (196) ledc: requested frequency and duty resolution cannot be achieved, try␣
↪reducing freq_hz or duty_resolution. div_param=128
```

In such a situation, either the duty resolution or the frequency must be reduced. For example, setting the duty resolution to 2 will resolve this issue and will make it possible to set the duty cycle at 25% steps, i.e., at 25%, 50% or 75%.

The LEDC driver will also capture and report attempts to configure frequency / duty resolution combinations that are below the supported minimum, e.g.:

```
E (196) ledc: requested frequency and duty resolution cannot be achieved, try␣
↪increasing freq_hz or duty_resolution. div_param=128000000
```

The duty resolution is normally set using *ledc_timer_bit_t*. This enumeration covers the range from 10 to 15 bits. If a smaller duty resolution is required (from 10 down to 1), enter the equivalent numeric values directly.

Application Example

The LEDC change duty cycle and fading control example: peripherals/ledc/ledc_fade.

The LEDC basic example: peripherals/ledc/ledc_basic.

API Reference

Header File

- components/driver/include/driver/ledc.h

Functions

esp_err_t **ledc_channel_config**(const *ledc_channel_config_t* *ledc_conf)

LEDC channel configuration Configure LEDC channel with the given channel/output gpio_num/interrupt/source timer/frequency(Hz)/LEDC duty resolution.

Parameters **ledc_conf** –Pointer of LEDC channel configure struct

Returns

- ESP_OK Success
- ESP_ERR_INVALID_ARG Parameter error

esp_err_t **ledc_timer_config**(const *ledc_timer_config_t* *timer_conf)

LEDC timer configuration Configure LEDC timer with the given source timer/frequency(Hz)/duty_resolution.

Parameters **timer_conf** –Pointer of LEDC timer configure struct

Returns

- ESP_OK Success
- ESP_ERR_INVALID_ARG Parameter error
- ESP_FAIL Can not find a proper pre-divider number base on the given frequency and the current duty_resolution.

esp_err_t **ledc_update_duty**(*ledc_mode_t* speed_mode, *ledc_channel_t* channel)

LEDC update channel parameters.

Note: Call this function to activate the LEDC updated parameters. After ledc_set_duty, we need to call this function to update the settings. And the new LEDC parameters don't take effect until the next PWM cycle.

Note: ledc_set_duty, ledc_set_duty_with_hpoint and ledc_update_duty are not thread-safe, do not call these functions to control one LEDC channel in different tasks at the same time. A thread-safe version of API is ledc_set_duty_and_update

---

Parameters

- **speed_mode** –Select the LEDC channel group with specified speed mode. Note that not all targets support high speed mode.
- **channel** –LEDC channel (0 - LEDC_CHANNEL_MAX-1), select from ledc_channel_t

Returns

- ESP_OK Success
- ESP_ERR_INVALID_ARG Parameter error

esp_err_t **ledc_set_pin**(int gpio_num, *ledc_mode_t* speed_mode, *ledc_channel_t* ledc_channel)

Set LEDC output gpio.

Deprecated:

This function is redundant, please use ledc_channel_config to set gpio pins.

Parameters

- **gpio_num** –The LEDC output gpio
- **speed_mode** –Select the LEDC channel group with specified speed mode. Note that not all targets support high speed mode.
- **ledc_channel** –LEDC channel (0 - LEDC_CHANNEL_MAX-1), select from ledc_channel_t

Returns

- ESP_OK Success
- ESP_ERR_INVALID_ARG Parameter error

esp_err_t **ledc_stop**(*ledc_mode_t* speed_mode, *ledc_channel_t* channel, uint32_t idle_level)

LEDC stop. Disable LEDC output, and set idle level.

Parameters

- **speed_mode** –Select the LEDC channel group with specified speed mode. Note that not all targets support high speed mode.
- **channel** –LEDC channel (0 - LEDC_CHANNEL_MAX-1), select from ledc_channel_t
- **idle_level** –Set output idle level after LEDC stops.

Returns

- ESP_OK Success
- ESP_ERR_INVALID_ARG Parameter error

esp_err_t **ledc_set_freq**(*ledc_mode_t* speed_mode, *ledc_timer_t* timer_num, uint32_t freq_hz)

LEDC set channel frequency (Hz)

Parameters

- **speed_mode** –Select the LEDC channel group with specified speed mode. Note that not all targets support high speed mode.
- **timer_num** –LEDC timer index (0-3), select from ledc_timer_t
- **freq_hz** –Set the LEDC frequency

Returns

- ESP_OK Success
- ESP_ERR_INVALID_ARG Parameter error
- ESP_FAIL Can not find a proper pre-divider number base on the given frequency and the current duty_resolution.

uint32_t **ledc_get_freq**(*ledc_mode_t* speed_mode, *ledc_timer_t* timer_num)

LEDC get channel frequency (Hz)

Parameters

- **speed_mode** –Select the LEDC channel group with specified speed mode. Note that not all targets support high speed mode.

- **timer_num** –LEDC timer index (0-3), select from ledc_timer_t

Returns

- 0 error
- Others Current LEDC frequency

esp_err_t **ledc_set_duty_with_hpoint**(*ledc_mode_t* speed_mode, *ledc_channel_t* channel, uint32_t duty, uint32_t hpoint)

LEDC set duty and hpoint value Only after calling ledc_update_duty will the duty update.

Note: ledc_set_duty, ledc_set_duty_with_hpoint and ledc_update_duty are not thread-safe, do not call these functions to control one LEDC channel in different tasks at the same time. A thread-safe version of API is ledc_set_duty_and_update

---

Note: If a fade operation is running in progress on that channel, the driver would not allow it to be stopped. Other duty operations will have to wait until the fade operation has finished.

Parameters

- **speed_mode** –Select the LEDC channel group with specified speed mode. Note that not all targets support high speed mode.
- **channel** –LEDC channel (0 - LEDC_CHANNEL_MAX-1), select from ledc_channel_t
- **duty** –Set the LEDC duty, the range of duty setting is [0, (2**duty_resolution) - 1]
- **hpoint** –Set the LEDC hpoint value(max: 0xfffff)

Returns

- ESP_OK Success
- ESP_ERR_INVALID_ARG Parameter error

int **ledc_get_hpoint**(*ledc_mode_t* speed_mode, *ledc_channel_t* channel)

LEDC get hpoint value, the counter value when the output is set high level.

Parameters

- **speed_mode** –Select the LEDC channel group with specified speed mode. Note that not all targets support high speed mode.
- **channel** –LEDC channel (0 - LEDC_CHANNEL_MAX-1), select from ledc_channel_t

Returns

- LEDC_ERR_VAL if parameter error
- Others Current hpoint value of LEDC channel

esp_err_t **ledc_set_duty**(*ledc_mode_t* speed_mode, *ledc_channel_t* channel, uint32_t duty)

LEDC set duty This function do not change the hpoint value of this channel. if needed, please call ledc_set_duty_with_hpoint. only after calling ledc_update_duty will the duty update.

Note: ledc_set_duty, ledc_set_duty_with_hpoint and ledc_update_duty are not thread-safe, do not call these functions to control one LEDC channel in different tasks at the same time. A thread-safe version of API is ledc_set_duty_and_update.

Note: If a fade operation is running in progress on that channel, the driver would not allow it to be stopped. Other duty operations will have to wait until the fade operation has finished.

Parameters

- **speed_mode** –Select the LEDC channel group with specified speed mode. Note that not all targets support high speed mode.

- **channel** –LEDC channel (0 - LEDC_CHANNEL_MAX-1), select from ledc_channel_t
- **duty** –Set the LEDC duty, the range of duty setting is [0, (2**duty_resolution) - 1]

Returns

- ESP_OK Success
- ESP_ERR_INVALID_ARG Parameter error

uint32_t **ledc_get_duty**(*ledc_mode_t* speed_mode, *ledc_channel_t* channel)

LEDC get duty This function returns the duty at the present PWM cycle. You shouldn't expect the function to return the new duty in the same cycle of calling ledc_update_duty, because duty update doesn't take effect until the next cycle.

Parameters

- **speed_mode** –Select the LEDC channel group with specified speed mode. Note that not all targets support high speed mode.
- **channel** –LEDC channel (0 - LEDC_CHANNEL_MAX-1), select from ledc_channel_t

Returns

- LEDC_ERR_DUTY if parameter error
- Others Current LEDC duty

esp_err_t **ledc_set_fade**(*ledc_mode_t* speed_mode, *ledc_channel_t* channel, uint32_t duty, *ledc_duty_direction_t* fade_direction, uint32_t step_num, uint32_t duty_cycle_num, uint32_t duty_scale)

LEDC set gradient Set LEDC gradient, After the function calls the ledc_update_duty function, the function can take effect.

Note: If a fade operation is running in progress on that channel, the driver would not allow it to be stopped. Other duty operations will have to wait until the fade operation has finished.

Parameters

- **speed_mode** –Select the LEDC channel group with specified speed mode. Note that not all targets support high speed mode.
- **channel** –LEDC channel (0 - LEDC_CHANNEL_MAX-1), select from ledc_channel_t
- **duty** –Set the start of the gradient duty, the range of duty setting is [0, (2**duty_resolution) - 1]
- **fade_direction** –Set the direction of the gradient
- **step_num** –Set the number of the gradient
- **duty_cycle_num** –Set how many LEDC tick each time the gradient lasts
- **duty_scale** –Set gradient change amplitude

Returns

- ESP_OK Success
- ESP_ERR_INVALID_ARG Parameter error

esp_err_t **ledc_isr_register**(void (*fn)(void*), void *arg, int intr_alloc_flags, *ledc_isr_handle_t* *handle)

Register LEDC interrupt handler, the handler is an ISR. The handler will be attached to the same CPU core that this function is running on.

Parameters

- **fn** –Interrupt handler function.
- **arg** –User-supplied argument passed to the handler function.
- **intr_alloc_flags** –Flags used to allocate the interrupt. One or multiple (ORred) ESP_INTR_FLAG_* values. See esp_intr_alloc.h for more info.
- **handle** –Pointer to return handle. If non-NULL, a handle for the interrupt will be returned here.

Returns

- ESP_OK Success
- ESP_ERR_INVALID_ARG Function pointer error.

esp_err_t **ledc_timer_set** (*ledc_mode_t* speed_mode, *ledc_timer_t* timer_sel, uint32_t clock_divider, uint32_t duty_resolution, *ledc_clk_src_t* clk_src)

Configure LEDC settings.

Parameters

- **speed_mode** –Select the LEDC channel group with specified speed mode. Note that not all targets support high speed mode.
- **timer_sel** –Timer index (0-3), there are 4 timers in LEDC module
- **clock_divider** –Timer clock divide value, the timer clock is divided from the selected clock source
- **duty_resolution** –Resolution of duty setting in number of bits. The range of duty values is [0, (2**duty_resolution)]
- **clk_src** –Select LEDC source clock.

Returns

- (-1) Parameter error
- Other Current LEDC duty

esp_err_t **ledc_timer_rst** (*ledc_mode_t* speed_mode, *ledc_timer_t* timer_sel)

Reset LEDC timer.

Parameters

- **speed_mode** –Select the LEDC channel group with specified speed mode. Note that not all targets support high speed mode.
- **timer_sel** –LEDC timer index (0-3), select from ledc_timer_t

Returns

- ESP_ERR_INVALID_ARG Parameter error
- ESP_OK Success

esp_err_t **ledc_timer_pause** (*ledc_mode_t* speed_mode, *ledc_timer_t* timer_sel)

Pause LEDC timer counter.

Parameters

- **speed_mode** –Select the LEDC channel group with specified speed mode. Note that not all targets support high speed mode.
- **timer_sel** –LEDC timer index (0-3), select from ledc_timer_t

Returns

- ESP_ERR_INVALID_ARG Parameter error
- ESP_OK Success

esp_err_t **ledc_timer_resume** (*ledc_mode_t* speed_mode, *ledc_timer_t* timer_sel)

Resume LEDC timer.

Parameters

- **speed_mode** –Select the LEDC channel group with specified speed mode. Note that not all targets support high speed mode.
- **timer_sel** –LEDC timer index (0-3), select from ledc_timer_t

Returns

- ESP_ERR_INVALID_ARG Parameter error
- ESP_OK Success

esp_err_t **ledc_bind_channel_timer** (*ledc_mode_t* speed_mode, *ledc_channel_t* channel, *ledc_timer_t* timer_sel)

Bind LEDC channel with the selected timer.

Parameters

- **speed_mode** –Select the LEDC channel group with specified speed mode. Note that not all targets support high speed mode.
- **channel** –LEDC channel index (0 - LEDC_CHANNEL_MAX-1), select from ledc_channel_t

- **timer_sel** –LEDC timer index (0-3), select from ledc_timer_t

Returns

- ESP_ERR_INVALID_ARG Parameter error
- ESP_OK Success

esp_err_t **ledc_set_fade_with_step**(*ledc_mode_t* speed_mode, *ledc_channel_t* channel, uint32_t target_duty, uint32_t scale, uint32_t cycle_num)

Set LEDC fade function.

Note: Call ledc_fade_func_install() once before calling this function. Call ledc_fade_start() after this to start fading.

Note: ledc_set_fade_with_step, ledc_set_fade_with_time and ledc_fade_start are not thread-safe, do not call these functions to control one LEDC channel in different tasks at the same time. A thread-safe version of API is ledc_set_fade_step_and_start

---

Note: If a fade operation is running in progress on that channel, the driver would not allow it to be stopped. Other duty operations will have to wait until the fade operation has finished.

Parameters

- **speed_mode** –Select the LEDC channel group with specified speed mode. Note that not all targets support high speed mode. ,
- **channel** –LEDC channel index (0 - LEDC_CHANNEL_MAX-1), select from ledc_channel_t
- **target_duty** –Target duty of fading [0, (2**duty_resolution) - 1]
- **scale** –Controls the increase or decrease step scale.
- **cycle_num** –increase or decrease the duty every cycle_num cycles

Returns

- ESP_ERR_INVALID_ARG Parameter error
- ESP_OK Success
- ESP_ERR_INVALID_STATE Fade function not installed.
- ESP_FAIL Fade function init error

esp_err_t **ledc_set_fade_with_time**(*ledc_mode_t* speed_mode, *ledc_channel_t* channel, uint32_t target_duty, int max_fade_time_ms)

Set LEDC fade function, with a limited time.

Note: Call ledc_fade_func_install() once before calling this function. Call ledc_fade_start() after this to start fading.

Note: ledc_set_fade_with_step, ledc_set_fade_with_time and ledc_fade_start are not thread-safe, do not call these functions to control one LEDC channel in different tasks at the same time. A thread-safe version of API is ledc_set_fade_step_and_start

---

Note: If a fade operation is running in progress on that channel, the driver would not allow it to be stopped. Other duty operations will have to wait until the fade operation has finished.

Parameters

- **speed_mode** –Select the LEDC channel group with specified speed mode. Note that not all targets support high speed mode. ,
- **channel** –LEDC channel index (0 - LEDC_CHANNEL_MAX-1), select from ledc_channel_t
- **target_duty** –Target duty of fading [0, (2**duty_resolution) - 1]
- **max_fade_time_ms** –The maximum time of the fading (ms).

Returns

- ESP_ERR_INVALID_ARG Parameter error
- ESP_OK Success
- ESP_ERR_INVALID_STATE Fade function not installed.
- ESP_FAIL Fade function init error

esp_err_t **ledc_fade_func_install**(int intr_alloc_flags)

Install LEDC fade function. This function will occupy interrupt of LEDC module.

Parameters **intr_alloc_flags** –Flags used to allocate the interrupt. One or multiple (ORred) ESP_INTR_FLAG_* values. See esp_intr_alloc.h for more info.

Returns

- ESP_OK Success
- ESP_ERR_INVALID_STATE Fade function already installed.

void **ledc_fade_func_uninstall**(void)

Uninstall LEDC fade function.

esp_err_t **ledc_fade_start**(*ledc_mode_t* speed_mode, *ledc_channel_t* channel, *ledc_fade_mode_t* fade_mode)

Start LEDC fading.

Note: Call ledc_fade_func_install() once before calling this function. Call this API right after ledc_set_fade_with_time or ledc_set_fade_with_step before to start fading.

Note: If a fade operation is running in progress on that channel, the driver would not allow it to be stopped. Other duty operations will have to wait until the fade operation has finished.

Parameters

- **speed_mode** –Select the LEDC channel group with specified speed mode. Note that not all targets support high speed mode.
- **channel** –LEDC channel number
- **fade_mode** –Whether to block until fading done. See ledc_types.h ledc_fade_mode_t for more info. Note that this function will not return until fading to the target duty if LEDC_FADE_WAIT_DONE mode is selected.

Returns

- ESP_OK Success
- ESP_ERR_INVALID_STATE Fade function not installed.
- ESP_ERR_INVALID_ARG Parameter error.

esp_err_t **ledc_set_duty_and_update**(*ledc_mode_t* speed_mode, *ledc_channel_t* channel, uint32_t duty, uint32_t hpoint)

A thread-safe API to set duty for LEDC channel and return when duty updated.

Note: If a fade operation is running in progress on that channel, the driver would not allow it to be stopped. Other duty operations will have to wait until the fade operation has finished.

Parameters

- **speed_mode** –Select the LEDC channel group with specified speed mode. Note that not all targets support high speed mode.
- **channel** –LEDC channel (0 - LEDC_CHANNEL_MAX-1), select from ledc_channel_t
- **duty** –Set the LEDC duty, the range of duty setting is [0, (2**duty_resolution) - 1]
- **hpoint** –Set the LEDC hpoint value(max: 0xfffff)

esp_err_t **ledc_set_fade_time_and_start** (*ledc_mode_t* speed_mode, *ledc_channel_t* channel, uint32_t target_duty, uint32_t max_fade_time_ms, *ledc_fade_mode_t* fade_mode)

A thread-safe API to set and start LEDC fade function, with a limited time.

Note: Call ledc_fade_func_install() once, before calling this function.

Note: If a fade operation is running in progress on that channel, the driver would not allow it to be stopped. Other duty operations will have to wait until the fade operation has finished.

Parameters

- **speed_mode** –Select the LEDC channel group with specified speed mode. Note that not all targets support high speed mode.
- **channel** –LEDC channel index (0 - LEDC_CHANNEL_MAX-1), select from ledc_channel_t
- **target_duty** –Target duty of fading [0, (2**duty_resolution) - 1]
- **max_fade_time_ms** –The maximum time of the fading (ms).
- **fade_mode** –choose blocking or non-blocking mode

Returns

- ESP_ERR_INVALID_ARG Parameter error
- ESP_OK Success
- ESP_ERR_INVALID_STATE Fade function not installed.
- ESP_FAIL Fade function init error

esp_err_t **ledc_set_fade_step_and_start** (*ledc_mode_t* speed_mode, *ledc_channel_t* channel, uint32_t target_duty, uint32_t scale, uint32_t cycle_num, *ledc_fade_mode_t* fade_mode)

A thread-safe API to set and start LEDC fade function.

Note: Call ledc_fade_func_install() once before calling this function.

Note: If a fade operation is running in progress on that channel, the driver would not allow it to be stopped. Other duty operations will have to wait until the fade operation has finished.

Parameters

- **speed_mode** –Select the LEDC channel group with specified speed mode. Note that not all targets support high speed mode.
- **channel** –LEDC channel index (0 - LEDC_CHANNEL_MAX-1), select from ledc_channel_t
- **target_duty** –Target duty of fading [0, (2**duty_resolution) - 1]
- **scale** –Controls the increase or decrease step scale.
- **cycle_num** –increase or decrease the duty every cycle_num cycles
- **fade_mode** –choose blocking or non-blocking mode

Returns

- ESP_ERR_INVALID_ARG Parameter error
- ESP_OK Success
- ESP_ERR_INVALID_STATE Fade function not installed.
- ESP_FAIL Fade function init error

esp_err_t **ledc_cb_register** (*ledc_mode_t* speed_mode, *ledc_channel_t* channel, *ledc_cbs_t* *cbs, void *user_arg)

LEDC callback registration function.

Note: The callback is called from an ISR, it must never attempt to block, and any FreeRTOS API called must be ISR capable.

Parameters

- **speed_mode** –Select the LEDC channel group with specified speed mode. Note that not all targets support high speed mode.
- **channel** –LEDC channel index (0 - LEDC_CHANNEL_MAX-1), select from ledc_channel_t
- **cbs** –Group of LEDC callback functions
- **user_arg** –user registered data for the callback function

Returns

- ESP_ERR_INVALID_ARG Parameter error
- ESP_OK Success
- ESP_ERR_INVALID_STATE Fade function not installed.
- ESP_FAIL Fade function init error

Structures

struct **ledc_channel_config_t**

Configuration parameters of LEDC channel for ledc_channel_config function.

Public Members

int **gpio_num**

the LEDC output gpio_num, if you want to use gpio16, gpio_num = 16

ledc_mode_t **speed_mode**

LEDC speed speed_mode, high-speed mode or low-speed mode

ledc_channel_t **channel**

LEDC channel (0 - 7)

ledc_intr_type_t **intr_type**

configure interrupt, Fade interrupt enable or Fade interrupt disable

ledc_timer_t **timer_sel**

Select the timer source of channel (0 - 3)

uint32_t **duty**

LEDC channel duty, the range of duty setting is [0, (2**duty_resolution)]

int **hpoint**

LEDC channel hpoint value, the max value is 0xfffff

unsigned int **output_invert**

Enable (1) or disable (0) gpio output invert

struct *ledc_channel_config_t*::[anonymous] **flags**

LEDC flags

struct **ledc_timer_config_t**

Configuration parameters of LEDC Timer timer for ledc_timer_config function.

Public Members

ledc_mode_t **speed_mode**

LEDC speed speed_mode, high-speed mode or low-speed mode

ledc_timer_bit_t **duty_resolution**

LEDC channel duty resolution

ledc_timer_bit_t **bit_num**

Deprecated in ESP-IDF 3.0. This is an alias to 'duty_resolution' for backward compatibility with ESP-IDF 2.1

ledc_timer_t **timer_num**

The timer source of channel (0 - 3)

uint32_t **freq_hz**

LEDC timer frequency (Hz)

ledc_clk_cfg_t **clk_cfg**

Configure LEDC source clock. For low speed channels and high speed channels, you can specify the source clock using LEDC_USE_REF_TICK, LEDC_USE_APB_CLK or LEDC_AUTO_CLK. For low speed channels, you can also specify the source clock using LEDC_USE_RTC8M_CLK, in this case, all low speed channel's source clock must be RTC8M_CLK

struct **ledc_cb_param_t**

LEDC callback parameter.

Public Members

ledc_cb_event_t **event**

Event name

uint32_t **speed_mode**

Speed mode of the LEDC channel group

uint32_t **channel**

LEDC channel (0 - LEDC_CHANNEL_MAX-1)

uint32_t **duty**

LEDC current duty of the channel, the range of duty is [0, (2**duty_resolution) - 1]

struct **ledc_cbs_t**

Group of supported LEDC callbacks.

Note: The callbacks are all running under ISR environment

Public Members

ledc_cb_t **fade_cb**

LEDC fade_end callback function

Macros

LEDC_APB_CLK_HZ

LEDC_REF_CLK_HZ

LEDC_ERR_DUTY

LEDC_ERR_VAL

Type Definitions

typedef *intr_handle_t* **ledc_isr_handle_t**

typedef bool (***ledc_cb_t**)(const *ledc_cb_param_t* *param, void *user_arg)

Type of LEDC event callback.

Param param LEDC callback parameter
Param user_arg User registered data

Enumerations

enum **ledc_cb_event_t**

LEDC callback event type.

Values:

enumerator **LEDC_FADE_END_EVT**

LEDC fade end event

Header File

- components/hal/include/hal/ledc_types.h

Enumerations

enum **ledc_mode_t**

Values:

enumerator **LEDC_HIGH_SPEED_MODE**

LEDC high speed speed_mode

enumerator **LEDC_LOW_SPEED_MODE**

LEDC low speed speed_mode

enumerator **LEDC_SPEED_MODE_MAX**

LEDC speed limit

enum **ledc_intr_type_t**

Values:

enumerator **LEDC_INTR_DISABLE**

Disable LEDC interrupt

enumerator **LEDC_INTR_FADE_END**

Enable LEDC interrupt

enumerator **LEDC_INTR_MAX**

enum **ledc_duty_direction_t**

Values:

enumerator **LEDC_DUTY_DIR_DECREASE**

LEDC duty decrease direction

enumerator **LEDC_DUTY_DIR_INCREASE**

LEDC duty increase direction

enumerator **LEDC_DUTY_DIR_MAX**

enum **ledc_slow_clk_sel_t**

Values:

enumerator **LEDC_SLOW_CLK_RTC8M**

LEDC low speed timer clock source is 8MHz RTC clock

enumerator **LEDC_SLOW_CLK_APB**

LEDC low speed timer clock source is 80MHz APB clock

enum **ledc_clk_cfg_t**

In theory, the following enumeration shall be placed in LEDC driver's header. However, as the next enumeration, `ledc_clk_src_t`, makes the use of some of these values and to avoid mutual inclusion of the headers, we must define it here.

Values:

enumerator **LEDC_AUTO_CLK**

The driver will automatically select the source clock(REF_TICK or APB) based on the giving resolution and duty parameter when init the timer

enumerator **LEDC_USE_APB_CLK**

LEDC timer select APB clock as source clock

enumerator **LEDC_USE_RTC8M_CLK**

LEDC timer select RTC8M_CLK as source clock. Only for low speed channels and this parameter must be the same for all low speed channels

enumerator **LEDC_USE_REF_TICK**

LEDC timer select REF_TICK clock as source clock

enum **ledc_clk_src_t**

Values:

enumerator **LEDC_REF_TICK**

LEDC timer clock divided from reference tick (1Mhz)

enumerator **LEDC_APB_CLK**

LEDC timer clock divided from APB clock (80Mhz)

enumerator **LEDC_SCLK**

Selecting this value for LEDC_TICK_SEL_TIMER let the hardware take its source clock from LEDC_APB_CLK_SEL

enum **ledc_timer_t**

Values:

enumerator **LEDC_TIMER_0**

LEDC timer 0

enumerator **LEDC_TIMER_1**

LEDC timer 1

enumerator **LEDC_TIMER_2**

LEDC timer 2

enumerator **LEDC_TIMER_3**

LEDC timer 3

enumerator **LEDC_TIMER_MAX**

enum **ledc_channel_t**

Values:

enumerator **LEDC_CHANNEL_0**

LEDC channel 0

enumerator **LEDC_CHANNEL_1**
LEDC channel 1

enumerator **LEDC_CHANNEL_2**
LEDC channel 2

enumerator **LEDC_CHANNEL_3**
LEDC channel 3

enumerator **LEDC_CHANNEL_4**
LEDC channel 4

enumerator **LEDC_CHANNEL_5**
LEDC channel 5

enumerator **LEDC_CHANNEL_6**
LEDC channel 6

enumerator **LEDC_CHANNEL_7**
LEDC channel 7

enumerator **LEDC_CHANNEL_MAX**

enum **ledc_timer_bit_t**
Values:

enumerator **LEDC_TIMER_1_BIT**
LEDC PWM duty resolution of 1 bits

enumerator **LEDC_TIMER_2_BIT**
LEDC PWM duty resolution of 2 bits

enumerator **LEDC_TIMER_3_BIT**
LEDC PWM duty resolution of 3 bits

enumerator **LEDC_TIMER_4_BIT**
LEDC PWM duty resolution of 4 bits

enumerator **LEDC_TIMER_5_BIT**
LEDC PWM duty resolution of 5 bits

enumerator **LEDC_TIMER_6_BIT**
LEDC PWM duty resolution of 6 bits

enumerator **LEDC_TIMER_7_BIT**
LEDC PWM duty resolution of 7 bits

enumerator **LEDC_TIMER_8_BIT**
LEDC PWM duty resolution of 8 bits

enumerator **LEDC_TIMER_9_BIT**

LEDC PWM duty resolution of 9 bits

enumerator **LEDC_TIMER_10_BIT**

LEDC PWM duty resolution of 10 bits

enumerator **LEDC_TIMER_11_BIT**

LEDC PWM duty resolution of 11 bits

enumerator **LEDC_TIMER_12_BIT**

LEDC PWM duty resolution of 12 bits

enumerator **LEDC_TIMER_13_BIT**

LEDC PWM duty resolution of 13 bits

enumerator **LEDC_TIMER_14_BIT**

LEDC PWM duty resolution of 14 bits

enumerator **LEDC_TIMER_15_BIT**

LEDC PWM duty resolution of 15 bits

enumerator **LEDC_TIMER_16_BIT**

LEDC PWM duty resolution of 16 bits

enumerator **LEDC_TIMER_17_BIT**

LEDC PWM duty resolution of 17 bits

enumerator **LEDC_TIMER_18_BIT**

LEDC PWM duty resolution of 18 bits

enumerator **LEDC_TIMER_19_BIT**

LEDC PWM duty resolution of 19 bits

enumerator **LEDC_TIMER_20_BIT**

LEDC PWM duty resolution of 20 bits

enumerator **LEDC_TIMER_BIT_MAX**

enum **ledc_fade_mode_t**

Values:

enumerator **LEDC_FADE_NO_WAIT**

LEDC fade function will return immediately

enumerator **LEDC_FADE_WAIT_DONE**

LEDC fade function will block until fading to the target duty

enumerator **LEDC_FADE_MAX**

2.3.9 Motor Control Pulse Width Modulator (MCPWM)

ESP32 has two MCPWM units which can be used to control different types of motors. Each unit has three pairs of PWM outputs.

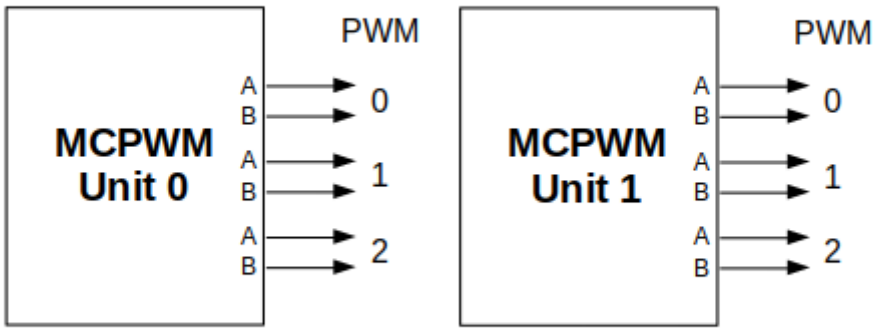

Fig. 12: MCPWM Overview

Further in documentation the outputs of a single unit are labeled `PWMxA` / `PWMxB`.

More detailed block diagram of the MCPWM unit is shown below. Each A/B pair may be clocked by any one of the three timers Timer 0, 1 and 2. The same timer may be used to clock more than one pair of PWM outputs. Each unit is also able to collect inputs such as `SYNC SIGNALS`, detect `FAULT SIGNALS` like motor overcurrent or overvoltage, as well as obtain feedback with `CAPTURE SIGNALS` on e.g. a rotor position.

Description of this API starts with configuration of MCPWM's **Timer** and **Generator** submodules to provide the basic motor control functionality. Then it discusses more advanced submodules and functionalities of a **Fault Handler**, signal **Capture** and **Carrier**.

Contents

- *Configure* a basic functionality of the outputs
- *Operate* the outputs to drive a motor
- *Adjust* how the motor is driven
- *Synchronize* sync timers to work together
- *Capture* external signals to provide additional control over the outputs
- Use *Fault Handler* to detect and manage faults
- Add a higher frequency *Carrier*, if output signals are passed through an isolation transformer
- Extra configuration of *Resolution*.

Configure

The scope of configuration depends on the motor type, in particular how many outputs and inputs are required, and what will be the sequence of signals to drive the motor.

In this case we will describe a simple configuration to control a brushed DC motor that is using only some of the available MCPWM's resources. An example circuit is shown below. It includes a H-Bridge to switch polarization of a voltage applied to the motor (M) and to provide sufficient current to drive it.

Configuration covers the following steps:

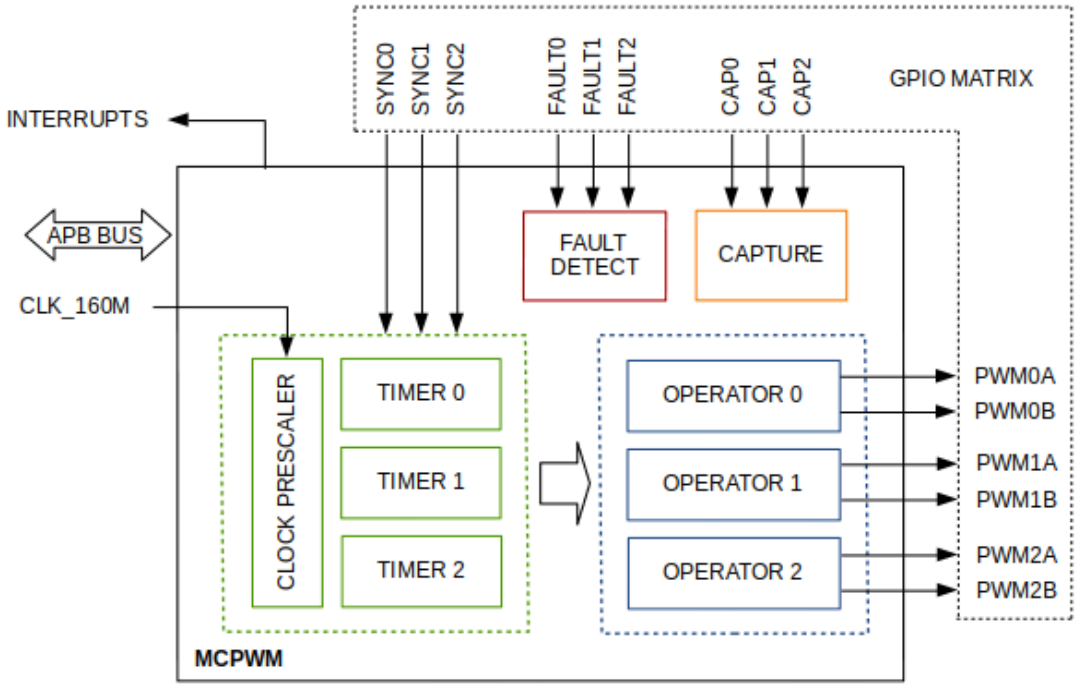

Fig. 13: MCPWM Block Diagram

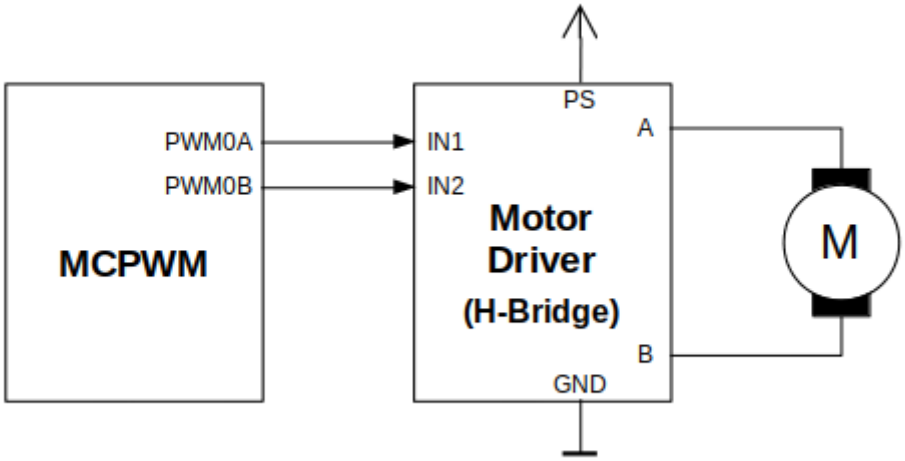

Fig. 14: Example of Brushed DC Motor Control with MCPWM

1. Selection of a MCPWM unit that will be used to drive the motor. There are two units available on-board of ESP32 and enumerated in *mcpwm_unit_t*.
2. Initialization of two GPIOs as output signals within selected unit by calling *mcpwm_gpio_init()*. The two output signals are typically used to command the motor to rotate right or left. All available signal options are listed in *mcpwm_io_signals_t*. To set more than a single pin at a time, use function *mcpwm_set_pin()* together with *mcpwm_pin_config_t*.
3. Selection of a timer. There are three timers available within the unit. The timers are listed in *mcpwm_timer_t*.
4. Setting of the timer frequency and initial duty within *mcpwm_config_t* structure.
5. Setting timer resolution if necessary, by calling *mcpwm_group_set_resolution()* and *mcpwm_timer_set_resolution()*
6. Calling of *mcpwm_init()* with the above parameters to make the configuration effective.

Operate

To operate a motor connected to the MCPWM unit, e.g. turn it left or right, or vary the speed, we should apply some control signals to the unit's outputs. The outputs are organized into three pairs. Within a pair they are labeled "A" and "B" and each driven by a submodule called an "Generator". To provide a PWM signal, the Operator itself, which contains two Generator, should be clocked by one of three available Timers. To make the API simpler, each Timer is automatically associated by the API to drive an Operator of the same index, e.g. Timer 0 is associated with Operator 0.

There are the following basic ways to control the outputs:

- We can drive particular signal steady high or steady low with function *mcpwm_set_signal_high()* or *mcpwm_set_signal_low()*. This will make the motor to turn with a maximum speed or stop. Depending on selected output A or B the motor will rotate either right or left.
- Another option is to drive the outputs with the PWM signal by calling *mcpwm_start()* or *mcpwm_stop()*. The motor speed will be proportional to the PWM duty.
- To vary PWM's duty call *mcpwm_set_duty()* and provide the duty value in %. Optionally, you may call *mcpwm_set_duty_in_us()*, if you prefer to set the duty in microseconds. Checking of currently set value is possible by calling *mcpwm_get_duty()*. Phase of the PWM signal may be altered by calling *mcpwm_set_duty_type()*. The duty is set individually for each A and B output using *mcpwm_generator_t* in specific function calls. The duty value refers either to high or low output signal duration. This is configured when calling *mcpwm_init()*, as discussed in section *Configure*, and selecting one of options from *mcpwm_duty_type_t*.

Note: Call function *mcpwm_set_duty_type()* every time after *mcpwm_set_signal_high()* or *mcpwm_set_signal_low()* to resume with previously set duty cycle.

Adjust

There are couple of ways to adjust a signal on the outputs and changing how the motor operates.

- Set specific PWM frequency by calling *mcpwm_set_frequency()*. This may be required to adjust to electrical or mechanical characteristics of particular motor and driver. To check what frequency is set, use function *mcpwm_get_frequency()*.
- Introduce a dead time between outputs A and B when they are changing the state to reverse direction of the motor rotation. This is to make up for on/off switching delay of the motor driver FETs. The dead time options are defined in *mcpwm_deadtime_type_t* and enabled by calling *mcpwm_deadtime_enable()*. To disable this functionality call *mcpwm_deadtime_disable()*.
- Synchronize outputs of operator submodules, e.g. to get raising edge of PWM0A/B and PWM1A/B to start exactly at the same time, or shift them between each other by a given phase. Synchronization is triggered by SYNC SIGNALS shown on the *block diagram* of the MCPWM above, and defined in *mcpwm_sync_signal_t*. To attach the signal to a GPIO call *mcpwm_gpio_init()*. You can then enable synchronization with function *mcpwm_sync_configure()*. As input parameters provide MCPWM unit, timer to synchronize, the synchronization signal and a phase to delay the timer.

Note: Synchronization signals are referred to using two different enumerations. First one `mcpwm_io_signals_t` is used together with function `mcpwm_gpio_init()` when selecting a GPIO as the signal input source. The second one `mcpwm_sync_signal_t` is used when enabling or disabling synchronization with `mcpwm_sync_configure()` or `mcpwm_sync_disable()`.

- Vary the pattern of the A/B output signals by getting MCPWM counters to count up, down and up/down (automatically changing the count direction). Respective configuration is done when calling `mcpwm_init()`, as discussed in section *Configure*, and selecting one of counter types from `mcpwm_counter_type_t`. For explanation of how A/B PWM output signals are generated, see *ESP32 Technical Reference Manual* > *Motor Control PWM (MCPWM)* [PDF].

Synchronize

Each PWM timer has a synchronization input and a synchronization output. The synchronization input can be selected from other timers' synchronization outputs or GPIO signals via the GPIO matrix. Timer's synchronization signal can be generated from either the input sync signal or when the count value reaches peak/zero. Thus, the PWM timers can be chained together with their phase-locked. During synchronization, the PWM timer clock prescaler will reset its counter in order to synchronize the PWM timer clock.

The functionality is enabled in following steps:

1. Make sure the PWM timer and operator are already configured so that sync will inherit its config (count mode, freq and duty).
2. Enabling sync input of the timer by invoking `mcpwm_sync_configure()`, selecting desired signal input from `mcpwm_sync_signal_t`, and setting the desired phase range from 0 to 999 which is mapped to 0%~99.9%. 0 means zero phase is applied and output is fired at the same time. And selecting desired counting direction.
3. Enabling one of sync event source from another timer or from external GPIO input.

To sync with another timer:

Enabling sync output of another timer by invoking `mcpwm_set_timer_sync_output()` and selecting desired event to generate sync output from `mcpwm_timer_sync_trigger_t`.

To sync with GPIO positive edge input (negative edge requires `mcpwm_sync_invert_gpio_synchro()`):

Configuring GPIOs to act as the sync signal inputs by calling functions `mcpwm_gpio_init()` or `mcpwm_set_pin()`, which were described in section *Configure*.

It's normal condition that chained sync signal may have tens or even hundreds of nanoseconds of delay between each timer output due to hardware limitation. To sync two timers accurately it is required to have the third timer occupied to produce sync event that can be consumed parallel by other two timer, so that those two timer will have no delay between each other but have the same delay between the timer which provides events. Another solution is introducing an external GPIO event source so that all three timers can be synced together with no delay.

If not required anymore, the capture functionality may be disabled with `mcpwm_sync_disable()`.

Capture

One of requirements of BLDC (Brushless DC, see figure below) motor control is sensing of the rotor position. To facilitate this task each MCPWM unit provides three sensing inputs together with dedicated hardware. The hardware is able to detect the input signal's edge and measure time between signals. As result the control software is simpler and the CPU power may be used for other tasks.

The capture functionality may be used for other types of motors or tasks. The functionality is enabled in two steps:

1. Configuration of GPIOs to act as the capture signal inputs by calling functions `mcpwm_gpio_init()` or `mcpwm_set_pin()`, that were described in section *Configure*.

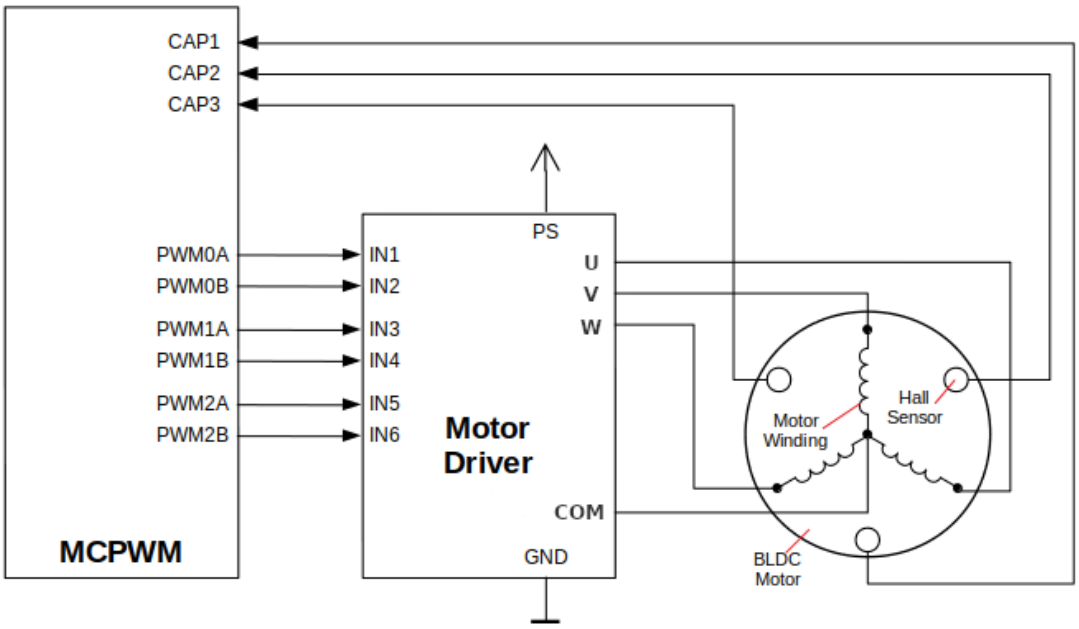

Fig. 15: Example of Brushless DC Motor Control with MCPWM

2. Enabling of the functionality itself by invoking *mcpwm_capture_enable_channel()*, selecting desired signal input from *mcpwm_capture_channel_id_t*, setting the signal edge, signal count prescaler and user callback within *mcpwm_capture_config_t*

Within the second step above a 32-bit capture timer is enabled. The timer runs continuously driven by the APB clock. The clock frequency is typically 80 MHz. On each capture event the capture timer's value is stored in timestamp register that may be then checked by calling *mcpwm_capture_signal_get_value()*. The edge of the last signal may be checked with *mcpwm_capture_signal_get_edge()*. Those data are also provided inside callback function as event data *cap_event_data_t*

If not required anymore, the capture functionality may be disabled with *mcpwm_capture_disable_channel()*.

Capture prescale is different from other modules as it is applied to the input signal, not the timer source. Prescaler has maintained its own level state with the initial value set to low and is detecting the positive edge of the input signal to change its internal state. That means if two pairs of positive and negative edges are passed to input, the prescaler's internal state will change twice. ISR will report on this internal state change, not the input signal. For example, setting prescale to 2 will generate ISR callback on each positive edge of input if both edge is selected via *mcpwm_capture_config_t*. Or each 2 positive edges of input if only one edge is selected though *mcpwm_capture_config_t*.

Fault Handler

Each unit of the MCPWM is able to sense external signals with information about failure of the motor, the motor driver or any other device connected to the MCPWM. There are three fault inputs per unit that may be routed to user selectable GPIOs. The MCPWM may be configured to perform one of four predefined actions on A/B outputs when a fault signal is received:

- lock current state of the output
- set the output low
- set the output high
- toggle the output

The user should determine possible failure modes of the motor and what action should be performed on detection of particular fault, e.g. drive all outputs low for a brushed motor, or lock current state for a stepper motor, etc. As result of this action the motor should be put into a safe state to reduce likelihood of a damage caused by the fault.

The fault handler functionality is enabled in two steps:

1. Configuration of GPIOs to act as fault signal inputs. This is done in analogous way as described for capture signals in section above. It includes setting the signal level to trigger the fault as defined in *mcpwm_fault_input_level_t*.
2. Initialization of the fault handler by calling either *mcpwm_fault_set_oneshot_mode()* or *mcpwm_fault_set_cyc_mode()*. These functions set the mode that MCPWM should operate once fault signal becomes inactive. There are two modes possible:

   - State of MCPWM unit will be locked until reset - *mcpwm_fault_set_oneshot_mode()*.
   - The MCPWM will resume operation once fault signal becoming inactive - *mcpwm_fault_set_cyc_mode()*.

   The function call parameters include selection of one of three fault inputs defined in *mcpwm_fault_signal_t* and specific action on outputs A and B defined in *mcpwm_action_on_pwmxa_t* and *mcpwm_action_on_pwmxb_t*.

Particular fault signal may be disabled at the runtime by calling *mcpwm_fault_deinit()*.

Carrier

The MCPWM has a carrier submodule used if galvanic isolation from the motor driver is required by passing the A/B output signals through transformers. Any of A and B output signals may be at 100% duty and not changing whenever motor is required to run steady at the full load. Coupling of non alternating signals with a transformer is problematic, so the signals are modulated by the carrier submodule to create an AC waveform, to make the coupling possible.

To use the carrier submodule, it should be first initialized by calling *mcpwm_carrier_init()*. The carrier parameters are defined in *mcpwm_carrier_config_t* structure invoked within the function call. Then the carrier functionality may be enabled by calling *mcpwm_carrier_enable()*.

The carrier parameters may be then altered at a runtime by calling dedicated functions to change individual fields of the *mcpwm_carrier_config_t* structure, like *mcpwm_carrier_set_period()*, *mcpwm_carrier_set_duty_cycle()*, *mcpwm_carrier_output_invert()*, etc.

This includes enabling and setting duration of the first pulse of the career with *mcpwm_carrier_oneshot_mode_enable()*. For more details, see *ESP32 Technical Reference Manual > Motor Control PWM (MCPWM) > PWM Carrier Submodule* [PDF].

To disable carrier functionality call *mcpwm_carrier_disable()*.

Interrupts

Registering of the MCPWM interrupt handler is possible by calling *mcpwm_isr_register()*. Note if *mcpwm_capture_enable_channel()* is used then a default ISR routine will be installed hence please do not call this function to register any more.

Resolution

The default resolution for MCPWM group and MCPWM timer are configured to **10MHz** and **1MHz** in *mcpwm_init()*, which might be not enough for some applications. The driver also provides two APIs that can be used to override the default resolution: *mcpwm_group_set_resolution()* and *mcpwm_timer_set_resolution()*.

Note that, these two APIs won't update the frequency and duty automatically, to achieve that, one has to call *mcpwm_set_frequency()* and *mcpwm_set_duty()* accordingly.

To get PWM pulse that is below 15Hz, please set the resolution to a lower value. For high frequency PWM with limited step range, please set them with higher value.

Application Example

MCPWM example are located under: peripherals/mcpwm:

- Control of BLDC (brushless DC) motor with hall sensor feedback - peripherals/mcpwm/mcpwm_bldc_hall_control
- Brushed DC motor control - peripherals/mcpwm/mcpwm_brushed_dc_control
- Servo motor control - peripherals/mcpwm/mcpwm_servo_control
- HC-SR04 sensor with capture - peripherals/mcpwm/mcpwm_capture_hc_sr04

API Reference

Header File

- components/hal/include/hal/mcpwm_types.h

Enumerations

enum **mcpwm_timer_direction_t**

Values:

enumerator **MCPWM_TIMER_DIRECTION_UP**

Counting direction: Increase

enumerator **MCPWM_TIMER_DIRECTION_DOWN**

Counting direction: Decrease

enum **mcpwm_timer_event_t**

Values:

enumerator **MCPWM_TIMER_EVENT_ZERO**

MCPWM timer counts to zero

enumerator **MCPWM_TIMER_EVENT_PEAK**

MCPWM timer counts to peak

enum **mcpwm_timer_count_mode_t**

Values:

enumerator **MCPWM_TIMER_COUNT_MODE_PAUSE**

MCPWM timer paused

enumerator **MCPWM_TIMER_COUNT_MODE_UP**

MCPWM timer counting up

enumerator **MCPWM_TIMER_COUNT_MODE_DOWN**

MCPWM timer counting down

enumerator **MCPWM_TIMER_COUNT_MODE_UP_DOWN**

MCPWM timer counting up and down

enum **mcpwm_timer_execute_cmd_t**

Values:

enumerator **MCPWM_TIMER_STOP_AT_ZERO**

MCPWM timer stops when couting to zero

enumerator **MCPWM_TIMER_STOP_AT_PEAK**

MCPWM timer stops when counting to peak

enumerator **MCPWM_TIMER_START_NO_STOP**

MCPWM timer starts couting

enumerator **MCPWM_TIMER_START_STOP_AT_ZERO**

MCPWM timer starts counting and stops when couting to zero

enumerator **MCPWM_TIMER_START_STOP_AT_PEAK**

MCPWM timer starts counting and stops when counting to peak

enum **mcpwm_generator_action_t**

Values:

enumerator **MCPWM_GEN_ACTION_KEEP**

Generator action: Keep the same level

enumerator **MCPWM_GEN_ACTION_LOW**

Generator action: Force to low level

enumerator **MCPWM_GEN_ACTION_HIGH**

Generator action: Force to high level

enumerator **MCPWM_GEN_ACTION_TOGGLE**

Generator action: Toggle level

enum **mcpwm_trip_type_t**

Values:

enumerator **MCPWM_TRIP_TYPE_CBC**

CBC trip type, shut down the operator cycle by cycle

enumerator **MCPWM_TRIP_TYPE_OST**

OST trip type, shut down the operator in one shot

Header File

- components/driver/include/driver/mcpwm.h

Functions

esp_err_t **mcpwm_gpio_init** (*mcpwm_unit_t* mcpwm_num, *mcpwm_io_signals_t* io_signal, int gpio_num)

This function initializes each gpio signal for MCPWM.

Note: This function initializes one gpio at a time.

Parameters

- **mcpwm_num** –set MCPWM unit(0-1)
- **io_signal** –set MCPWM signals, each MCPWM unit has 6 output(MCPWMXA, MCPWMXB) and 9 input(SYNC_X, FAULT_X, CAP_X) 'X' is timer_num(0-2)
- **gpio_num** –set this to configure gpio for MCPWM, if you want to use gpio16, gpio_num = 16

Returns

- ESP_OK Success
- ESP_ERR_INVALID_ARG Parameter error

esp_err_t **mcpwm_set_pin** (*mcpwm_unit_t* mcpwm_num, const *mcpwm_pin_config_t* *mcpwm_pin)

Initialize MCPWM gpio structure.

Note: This function initialize a group of MCPWM GPIOs at a time.

Parameters

- **mcpwm_num** –set MCPWM unit(0-1)
- **mcpwm_pin** –MCPWM pin structure

Returns

- ESP_OK Success
- ESP_ERR_INVALID_ARG Parameter error

esp_err_t **mcpwm_init** (*mcpwm_unit_t* mcpwm_num, *mcpwm_timer_t* timer_num, const *mcpwm_config_t* *mcpwm_conf)

Initialize MCPWM parameters.

Note: The default resolution configured for MCPWM group and timer are 160M / 16 = 10M and 10M / 10 = 1M The default resolution can be changed by calling mcpwm_group_set_resolution() and mcpwm_timer_set_resolution(), before calling this function.

Parameters

- **mcpwm_num** –set MCPWM unit(0-1)
- **timer_num** –set timer number(0-2) of MCPWM, each MCPWM unit has 3 timers.
- **mcpwm_conf** –configure structure *mcpwm_config_t*

Returns

- ESP_OK Success
- ESP_ERR_INVALID_ARG Parameter error

esp_err_t **mcpwm_group_set_resolution** (*mcpwm_unit_t* mcpwm_num, unsigned long int resolution)

Set resolution of the MCPWM group.

Note: This will override default resolution of group(=10,000,000). This WILL NOT automatically update frequency and duty. Call mcpwm_set_frequency() and mcpwm_set_duty() manually to set them back.

Parameters

- **mcpwm_num** –set MCPWM unit(0-1)

- **resolution** –set expected frequency resolution

Returns

- ESP_OK Success
- ESP_ERR_INVALID_ARG Parameter error

esp_err_t **mcpwm_timer_set_resolution** (*mcpwm_unit_t* mcpwm_num, *mcpwm_timer_t* timer_num, unsigned long int resolution)

Set resolution of each timer.

Note: This WILL override default resolution of timer(=1,000,000). This WILL NOT automatically update frequency and duty. Call mcpwm_set_frequency() and mcpwm_set_duty() manually to set them back.

Parameters

- **mcpwm_num** –set MCPWM unit(0-1)
- **timer_num** –set timer number(0-2) of MCPWM, each MCPWM unit has 3 timers
- **resolution** –set expected frequency resolution

Returns

- ESP_OK Success
- ESP_ERR_INVALID_ARG Parameter error

esp_err_t **mcpwm_set_frequency** (*mcpwm_unit_t* mcpwm_num, *mcpwm_timer_t* timer_num, uint32_t frequency)

Set frequency(in Hz) of MCPWM timer.

Parameters

- **mcpwm_num** –set MCPWM unit(0-1)
- **timer_num** –set timer number(0-2) of MCPWM, each MCPWM unit has 3 timers
- **frequency** –set the frequency in Hz of each timer

Returns

- ESP_OK Success
- ESP_ERR_INVALID_ARG Parameter error

esp_err_t **mcpwm_set_duty** (*mcpwm_unit_t* mcpwm_num, *mcpwm_timer_t* timer_num, *mcpwm_generator_t* gen, float duty)

Set duty cycle of each operator(MCPWMXA/MCPWMXB)

Parameters

- **mcpwm_num** –set MCPWM unit(0-1)
- **timer_num** –set timer number(0-2) of MCPWM, each MCPWM unit has 3 timers
- **gen** –set the generator(MCPWMXA/MCPWMXB), 'X' is operator number selected
- **duty** –set duty cycle in %(i.e for 62.3% duty cycle, duty = 62.3) of each operator

Returns

- ESP_OK Success
- ESP_ERR_INVALID_ARG Parameter error

esp_err_t **mcpwm_set_duty_in_us** (*mcpwm_unit_t* mcpwm_num, *mcpwm_timer_t* timer_num, *mcpwm_generator_t* gen, uint32_t duty_in_us)

Set duty cycle of each operator(MCPWMXA/MCPWMXB) in us.

Parameters

- **mcpwm_num** –set MCPWM unit(0-1)
- **timer_num** –set timer number(0-2) of MCPWM, each MCPWM unit has 3 timers
- **gen** –set the generator(MCPWMXA/MCPWMXB), 'x' is operator number selected
- **duty_in_us** –set duty value in microseconds of each operator

Returns

- ESP_OK Success
- ESP_ERR_INVALID_ARG Parameter error

esp_err_t **mcpwm_set_duty_type**(*mcpwm_unit_t* mcpwm_num, *mcpwm_timer_t* timer_num, *mcpwm_generator_t* gen, *mcpwm_duty_type_t* duty_type)

Set duty either active high or active low(out of phase/inverted)

Note: Call this function every time after mcpwm_set_signal_high or mcpwm_set_signal_low to resume with previously set duty cycle

---

Parameters

- **mcpwm_num** –set MCPWM unit(0-1)
- **timer_num** –set timer number(0-2) of MCPWM, each MCPWM unit has 3 timers
- **gen** –set the generator(MCPWMXA/MCPWMXB), 'x' is operator number selected
- **duty_type** –set active low or active high duty type

Returns

- ESP_OK Success
- ESP_ERR_INVALID_ARG Parameter error

uint32_t **mcpwm_get_frequency**(*mcpwm_unit_t* mcpwm_num, *mcpwm_timer_t* timer_num)

Get frequency of timer.

Parameters

- **mcpwm_num** –set MCPWM unit(0-1)
- **timer_num** –set timer number(0-2) of MCPWM, each MCPWM unit has 3 timers

Returns

- frequency of timer

float **mcpwm_get_duty**(*mcpwm_unit_t* mcpwm_num, *mcpwm_timer_t* timer_num, *mcpwm_operator_t* gen)

Get duty cycle of each operator.

Parameters

- **mcpwm_num** –set MCPWM unit(0-1)
- **timer_num** –set timer number(0-2) of MCPWM, each MCPWM unit has 3 timers
- **gen** –set the generator(MCPWMXA/MCPWMXB), 'x' is operator number selected

Returns

- duty cycle in % of each operator(56.7 means duty is 56.7%)

uint32_t **mcpwm_get_duty_in_us**(*mcpwm_unit_t* mcpwm_num, *mcpwm_timer_t* timer_num, *mcpwm_operator_t* gen)

Get duty cycle of each operator in us.

Parameters

- **mcpwm_num** –set MCPWM unit(0-1)
- **timer_num** –set timer number(0-2) of MCPWM, each MCPWM unit has 3 timers
- **gen** –set the generator(MCPWMXA/MCPWMXB), 'x' is operator number selected

Returns

- duty cycle in us of each operator

esp_err_t **mcpwm_set_signal_high**(*mcpwm_unit_t* mcpwm_num, *mcpwm_timer_t* timer_num, *mcpwm_generator_t* gen)

Use this function to set MCPWM signal high.

Parameters

- **mcpwm_num** –set MCPWM unit(0-1)
- **timer_num** –set timer number(0-2) of MCPWM, each MCPWM unit has 3 timers
- **gen** –set the operator(MCPWMXA/MCPWMXB), 'x' is timer number selected

Returns

- ESP_OK Success
- ESP_ERR_INVALID_ARG Parameter error

esp_err_t **mcpwm_set_signal_low**(*mcpwm_unit_t* mcpwm_num, *mcpwm_timer_t* timer_num, *mcpwm_generator_t* gen)

Use this function to set MCPWM signal low.

Parameters

- **mcpwm_num** –set MCPWM unit(0-1)
- **timer_num** –set timer number(0-2) of MCPWM, each MCPWM unit has 3 timers
- **gen** –set the operator(MCPWMXA/MCPWMXB), 'x' is timer number selected

Returns

- ESP_OK Success
- ESP_ERR_INVALID_ARG Parameter error

esp_err_t **mcpwm_start**(*mcpwm_unit_t* mcpwm_num, *mcpwm_timer_t* timer_num)

Start MCPWM signal on timer 'x'.

Parameters

- **mcpwm_num** –set MCPWM unit(0-1)
- **timer_num** –set timer number(0-2) of MCPWM, each MCPWM unit has 3 timers

Returns

- ESP_OK Success
- ESP_ERR_INVALID_ARG Parameter error

esp_err_t **mcpwm_stop**(*mcpwm_unit_t* mcpwm_num, *mcpwm_timer_t* timer_num)

Start MCPWM signal on timer 'x'.

Parameters

- **mcpwm_num** –set MCPWM unit(0-1)
- **timer_num** –set timer number(0-2) of MCPWM, each MCPWM unit has 3 timers

Returns

- ESP_OK Success
- ESP_ERR_INVALID_ARG Parameter error

esp_err_t **mcpwm_carrier_init**(*mcpwm_unit_t* mcpwm_num, *mcpwm_timer_t* timer_num, const *mcpwm_carrier_config_t* *carrier_conf)

Initialize carrier configuration.

Parameters

- **mcpwm_num** –set MCPWM unit(0-1)
- **timer_num** –set timer number(0-2) of MCPWM, each MCPWM unit has 3 timers
- **carrier_conf** –configure structure *mcpwm_carrier_config_t*

Returns

- ESP_OK Success
- ESP_ERR_INVALID_ARG Parameter error

esp_err_t **mcpwm_carrier_enable**(*mcpwm_unit_t* mcpwm_num, *mcpwm_timer_t* timer_num)

Enable MCPWM carrier submodule, for respective timer.

Parameters

- **mcpwm_num** –set MCPWM unit(0-1)
- **timer_num** –set timer number(0-2) of MCPWM, each MCPWM unit has 3 timers

Returns

- ESP_OK Success
- ESP_ERR_INVALID_ARG Parameter error

esp_err_t **mcpwm_carrier_disable**(*mcpwm_unit_t* mcpwm_num, *mcpwm_timer_t* timer_num)

Disable MCPWM carrier submodule, for respective timer.

Parameters

- **mcpwm_num** –set MCPWM unit(0-1)
- **timer_num** –set timer number(0-2) of MCPWM, each MCPWM unit has 3 timers

Returns

- ESP_OK Success

- ESP_ERR_INVALID_ARG Parameter error

esp_err_t **mcpwm_carrier_set_period**(*mcpwm_unit_t* mcpwm_num, *mcpwm_timer_t* timer_num, uint8_t carrier_period)

Set period of carrier.

Parameters

- **mcpwm_num** –set MCPWM unit(0-1)
- **timer_num** –set timer number(0-2) of MCPWM, each MCPWM unit has 3 timers
- **carrier_period** –set the carrier period of each timer, carrier period = (carrier_period + 1)*800ns (carrier_period <= 15)

Returns

- ESP_OK Success
- ESP_ERR_INVALID_ARG Parameter error

esp_err_t **mcpwm_carrier_set_duty_cycle**(*mcpwm_unit_t* mcpwm_num, *mcpwm_timer_t* timer_num, uint8_t carrier_duty)

Set duty_cycle of carrier.

Parameters

- **mcpwm_num** –set MCPWM unit(0-1)
- **timer_num** –set timer number(0-2) of MCPWM, each MCPWM unit has 3 timers
- **carrier_duty** –set duty_cycle of carrier , carrier duty cycle = carrier_duty*12.5% (chop_duty <= 7)

Returns

- ESP_OK Success
- ESP_ERR_INVALID_ARG Parameter error

esp_err_t **mcpwm_carrier_oneshot_mode_enable**(*mcpwm_unit_t* mcpwm_num, *mcpwm_timer_t* timer_num, uint8_t pulse_width)

Enable and set width of first pulse in carrier oneshot mode.

Parameters

- **mcpwm_num** –set MCPWM unit(0-1)
- **timer_num** –set timer number(0-2) of MCPWM, each MCPWM unit has 3 timers
- **pulse_width** –set pulse width of first pulse in oneshot mode, width = (carrier period)*(pulse_width +1) (pulse_width <= 15)

Returns

- ESP_OK Success
- ESP_ERR_INVALID_ARG Parameter error

esp_err_t **mcpwm_carrier_oneshot_mode_disable**(*mcpwm_unit_t* mcpwm_num, *mcpwm_timer_t* timer_num)

Disable oneshot mode, width of first pulse = carrier period.

Parameters

- **mcpwm_num** –set MCPWM unit(0-1)
- **timer_num** –set timer number(0-2) of MCPWM, each MCPWM unit has 3 timers

Returns

- ESP_OK Success
- ESP_ERR_INVALID_ARG Parameter error

esp_err_t **mcpwm_carrier_output_invert**(*mcpwm_unit_t* mcpwm_num, *mcpwm_timer_t* timer_num, *mcpwm_carrier_out_ivt_t* carrier_ivt_mode)

Enable or disable carrier output inversion.

Parameters

- **mcpwm_num** –set MCPWM unit(0-1)
- **timer_num** –set timer number(0-2) of MCPWM, each MCPWM unit has 3 timers
- **carrier_ivt_mode** –enable or disable carrier output inversion

Returns

- ESP_OK Success

- ESP_ERR_INVALID_ARG Parameter error

esp_err_t **mcpwm_deadtime_enable** (*mcpwm_unit_t* mcpwm_num, *mcpwm_timer_t* timer_num, *mcpwm_deadtime_type_t* dt_mode, uint32_t red, uint32_t fed)

Enable and initialize deadtime for each MCPWM timer.

Parameters

- **mcpwm_num** –set MCPWM unit(0-1)
- **timer_num** –set timer number(0-2) of MCPWM, each MCPWM unit has 3 timers
- **dt_mode** –set deadtime mode
- **red** –set rising edge delay = red*100ns
- **fed** –set rising edge delay = fed*100ns

Returns

- ESP_OK Success
- ESP_ERR_INVALID_ARG Parameter error

esp_err_t **mcpwm_deadtime_disable** (*mcpwm_unit_t* mcpwm_num, *mcpwm_timer_t* timer_num)

Disable deadtime on MCPWM timer.

Parameters

- **mcpwm_num** –set MCPWM unit(0-1)
- **timer_num** –set timer number(0-2) of MCPWM, each MCPWM unit has 3 timers

Returns

- ESP_OK Success
- ESP_ERR_INVALID_ARG Parameter error

esp_err_t **mcpwm_fault_init** (*mcpwm_unit_t* mcpwm_num, *mcpwm_fault_input_level_t* intput_level, *mcpwm_fault_signal_t* fault_sig)

Initialize fault submodule, currently low level triggering is not supported.

Parameters

- **mcpwm_num** –set MCPWM unit(0-1)
- **intput_level** –set fault signal level, which will cause fault to occur
- **fault_sig** –set the fault pin, which needs to be enabled

Returns

- ESP_OK Success
- ESP_ERR_INVALID_ARG Parameter error

esp_err_t **mcpwm_fault_set_oneshot_mode** (*mcpwm_unit_t* mcpwm_num, *mcpwm_timer_t* timer_num, *mcpwm_fault_signal_t* fault_sig, *mcpwm_output_action_t* action_on_pwmxa, *mcpwm_output_action_t* action_on_pwmxb)

Set oneshot mode on fault detection, once fault occur in oneshot mode reset is required to resume MCPWM signals.

Note: currently low level triggering is not supported

Parameters

- **mcpwm_num** –set MCPWM unit(0-1)
- **timer_num** –set timer number(0-2) of MCPWM, each MCPWM unit has 3 timers
- **fault_sig** –set the fault pin, which needs to be enabled for oneshot mode
- **action_on_pwmxa** –action to be taken on MCPWMXA when fault occurs, either no change or high or low or toggle
- **action_on_pwmxb** –action to be taken on MCPWMXB when fault occurs, either no change or high or low or toggle

Returns

- ESP_OK Success
- ESP_ERR_INVALID_ARG Parameter error

esp_err_t **mcpwm_fault_set_cyc_mode**(*mcpwm_unit_t* mcpwm_num, *mcpwm_timer_t* timer_num, *mcpwm_fault_signal_t* fault_sig, *mcpwm_output_action_t* action_on_pwmxa, *mcpwm_output_action_t* action_on_pwmxb)

Set cycle-by-cycle mode on fault detection, once fault occur in cyc mode MCPWM signal resumes as soon as fault signal becomes inactive.

Note: currently low level triggering is not supported

Parameters

- **mcpwm_num** –set MCPWM unit(0-1)
- **timer_num** –set timer number(0-2) of MCPWM, each MCPWM unit has 3 timers
- **fault_sig** –set the fault pin, which needs to be enabled for cyc mode
- **action_on_pwmxa** –action to be taken on MCPWMXA when fault occurs, either no change or high or low or toggle
- **action_on_pwmxb** –action to be taken on MCPWMXB when fault occurs, either no change or high or low or toggle

Returns

- ESP_OK Success
- ESP_ERR_INVALID_ARG Parameter error

esp_err_t **mcpwm_fault_deinit**(*mcpwm_unit_t* mcpwm_num, *mcpwm_fault_signal_t* fault_sig)

Disable fault signal.

Parameters

- **mcpwm_num** –set MCPWM unit(0-1)
- **fault_sig** –fault pin, which needs to be disabled

Returns

- ESP_OK Success
- ESP_ERR_INVALID_ARG Parameter error

esp_err_t **mcpwm_capture_enable**(*mcpwm_unit_t* mcpwm_num, *mcpwm_capture_signal_t* cap_sig, *mcpwm_capture_on_edge_t* cap_edge, uint32_t num_of_pulse)

Initialize capture submodule.

Note: Enabling capture feature would also enable the capture interrupt event, users have to register an interrupt handler by `mcpwm_isr_register`, and in there, query the capture data.

Note: The capture timer uses APB_CLK (typically 80MHz) as the count source.

Parameters

- **mcpwm_num** –set MCPWM unit(0-1)
- **cap_edge** –set capture edge, BIT(0) - negative edge, BIT(1) - positive edge
- **cap_sig** –capture pin, which needs to be enabled
- **num_of_pulse** –Input capture signal prescaling, ranges from 0 to 255, representing prescaling from 1 to 256.

Returns

- ESP_OK Success
- ESP_ERR_INVALID_ARG Parameter error

esp_err_t **mcpwm_capture_disable**(*mcpwm_unit_t* mcpwm_num, *mcpwm_capture_signal_t* cap_sig)

Disable capture signal.

Parameters

- **mcpwm_num** –set MCPWM unit(0-1)

- **cap_sig** –capture pin, which needs to be disabled

Returns

- ESP_OK Success
- ESP_ERR_INVALID_ARG Parameter error

esp_err_t **mcpwm_capture_enable_channel**(*mcpwm_unit_t* mcpwm_num, *mcpwm_capture_channel_id_t* cap_channel, const *mcpwm_capture_config_t* *cap_conf)

Enable capture channel.

Parameters

- **mcpwm_num** –set MCPWM unit(0-1)
- **cap_channel** –capture channel, which needs to be enabled
- **cap_conf** –capture channel configuration

Returns

- ESP_OK Success
- ESP_ERR_INVALID_ARG Parameter error

esp_err_t **mcpwm_capture_disable_channel**(*mcpwm_unit_t* mcpwm_num, *mcpwm_capture_channel_id_t* cap_channel)

Disable capture channel.

Parameters

- **mcpwm_num** –set MCPWM unit(0-1)
- **cap_channel** –capture channel, which needs to be disabled

Returns

- ESP_OK Success
- ESP_ERR_INVALID_ARG Parameter error

uint32_t **mcpwm_capture_signal_get_value**(*mcpwm_unit_t* mcpwm_num, *mcpwm_capture_signal_t* cap_sig)

Get capture value.

Parameters

- **mcpwm_num** –set MCPWM unit(0-1)
- **cap_sig** –capture channel on which value is to be measured

Returns Captured value

uint32_t **mcpwm_capture_signal_get_edge**(*mcpwm_unit_t* mcpwm_num, *mcpwm_capture_signal_t* cap_sig)

Get edge of capture signal.

Parameters

- **mcpwm_num** –set MCPWM unit(0-1)
- **cap_sig** –capture channel of whose edge is to be determined

Returns Capture signal edge: 1 - positive edge, 2 - negtive edge

esp_err_t **mcpwm_sync_enable**(*mcpwm_unit_t* mcpwm_num, *mcpwm_timer_t* timer_num, *mcpwm_sync_signal_t* sync_sig, uint32_t phase_val)

Initialize sync submodule and sets the signal that will cause the timer be loaded with pre-defined value.

Note: Count direction is undefined within this API

Parameters

- **mcpwm_num** –set MCPWM unit(0-1)
- **timer_num** –set timer number(0-2) of MCPWM, each MCPWM unit has 3 timers
- **sync_sig** –set the synchronization input signal
- **phase_val** –phase value in 1/1000 (for 86.7%, phase_val = 867) which timer moves to on sync signal

Returns

- ESP_OK Success

- ESP_ERR_INVALID_ARG Parameter error

esp_err_t **mcpwm_sync_configure** (*mcpwm_unit_t* mcpwm_num, *mcpwm_timer_t* timer_num, const *mcpwm_sync_config_t* *sync_conf)

Initialize sync submodule and sets the signal that will cause the timer be loaded with pre-defined value.

Parameters

- **mcpwm_num** –set MCPWM unit(0-1)
- **timer_num** –set timer number(0-2) of MCPWM, each MCPWM unit has 3 timers
- **sync_conf** –sync configuration on this timer

Returns

- ESP_OK Success
- ESP_ERR_INVALID_ARG Parameter error

esp_err_t **mcpwm_sync_disable** (*mcpwm_unit_t* mcpwm_num, *mcpwm_timer_t* timer_num)

Disable sync submodule on given timer.

Parameters

- **mcpwm_num** –set MCPWM unit(0-1)
- **timer_num** –set timer number(0-2) of MCPWM, each MCPWM unit has 3 timers

Returns

- ESP_OK Success
- ESP_ERR_INVALID_ARG Parameter error

esp_err_t **mcpwm_set_timer_sync_output** (*mcpwm_unit_t* mcpwm_num, *mcpwm_timer_t* timer_num, *mcpwm_timer_sync_trigger_t* trigger)

Set sync output on given timer Configures what event triggers MCPWM timer to output a sync signal.

Parameters

- **mcpwm_num** –set MCPWM unit(0-1)
- **timer_num** –set timer number(0-2) of MCPWM, each MCPWM unit has 3 timers
- **trigger** –set the trigger that will cause the timer to generate a software sync signal. Specifically, `MCPWM_SWSYNC_SOURCE_DISABLED` will disable the timer from generating sync signal.

Returns

- ESP_OK Success
- ESP_ERR_INVALID_ARG Parameter error

esp_err_t **mcpwm_timer_trigger_soft_sync** (*mcpwm_unit_t* mcpwm_num, *mcpwm_timer_t* timer_num)

Trigger a software sync event and sends it to a specific timer.

Note: This software sync event will have the same effect as hw one, except that:

- On esp32s3 the soft sync event can be routed to its output if `MCPWM_SWSYNC_SOURCE_SYNCIN` is selected via `mcpwm_set_timer_sync_output()`
- On esp32 there is no such behavior and soft sync event will only take effect on this timer and can not be propagated to others.

Parameters

- **mcpwm_num** –set MCPWM unit(0-1)
- **timer_num** –set timer number(0-2) of MCPWM, each MCPWM unit has 3 timers

Returns

- ESP_OK Success
- ESP_ERR_INVALID_ARG Function pointer error.

esp_err_t **mcpwm_sync_invert_gpio_synchro** (*mcpwm_unit_t* mcpwm_num, *mcpwm_sync_signal_t* sync_sig, bool invert)

Set external GPIO sync input inverter.

Parameters

- **mcpwm_num** –set MCPWM unit(0-1)
- **sync_sig** –set sync signal of MCPWM, only supports GPIO sync signal
- **invert** –whether GPIO sync source input is inverted (to get negative edge trigger)

Returns

- ESP_OK Success
- ESP_ERR_INVALID_ARG Function pointer error.

esp_err_t **mcpwm_isr_register**(*mcpwm_unit_t* mcpwm_num, void (*fn)(void*), void *arg, int intr_alloc_flags, *intr_handle_t* *handle)

Register MCPWM interrupt handler, the handler is an ISR. the handler will be attached to the same CPU core that this function is running on.

Parameters

- **mcpwm_num** –set MCPWM unit(0-1)
- **fn** –interrupt handler function.
- **arg** –user-supplied argument passed to the handler function.
- **intr_alloc_flags** –flags used to allocate the interrupt. One or multiple (ORred) ESP_INTR_FLAG_* values. see esp_intr_alloc.h for more info.
- **handle** –pointer to return handle. If non-NULL, a handle for the interrupt will be returned here.

Returns

- ESP_OK Success
- ESP_ERR_INVALID_ARG Function pointer error.

Structures

struct **mcpwm_pin_config_t**

pin number for MCPWM

Public Members

int **mcpwm0a_out_num**

MCPWM0A out pin

int **mcpwm0b_out_num**

MCPWM0A out pin

int **mcpwm1a_out_num**

MCPWM0A out pin

int **mcpwm1b_out_num**

MCPWM0A out pin

int **mcpwm2a_out_num**

MCPWM0A out pin

int **mcpwm2b_out_num**

MCPWM0A out pin

int **mcpwm_sync0_in_num**

SYNC0 in pin

int **mcpwm_sync1_in_num**
SYNC1 in pin

int **mcpwm_sync2_in_num**
SYNC2 in pin

int **mcpwm_fault0_in_num**
FAULT0 in pin

int **mcpwm_fault1_in_num**
FAULT1 in pin

int **mcpwm_fault2_in_num**
FAULT2 in pin

int **mcpwm_cap0_in_num**
CAP0 in pin

int **mcpwm_cap1_in_num**
CAP1 in pin

int **mcpwm_cap2_in_num**
CAP2 in pin

struct **cap_event_data_t**
event data that will be passed into ISR callback

Public Members

mcpwm_capture_on_edge_t **cap_edge**
Which signal edge is detected

uint32_t **cap_value**
Corresponding timestamp when event occurs. Clock rate = APB(usually 80M)

struct **mcpwm_config_t**
MCPWM config structure.

Public Members

uint32_t **frequency**
Set frequency of MCPWM in Hz

float **cmpr_a**
Set % duty cycle for operator a(MCPWMXA), i.e for 62.3% duty cycle, duty_a = 62.3

float **cmpr_b**
Set % duty cycle for operator b(MCPWMXB), i.e for 48% duty cycle, duty_b = 48.0

mcpwm_duty_type_t **duty_mode**

Set type of duty cycle

mcpwm_counter_type_t **counter_mode**

Set type of MCPWM counter

struct **mcpwm_carrier_config_t**

MCPWM carrier configuration structure.

Public Members

uint8_t **carrier_period**

Set carrier period = (carrier_period + 1)*800ns, carrier_period should be < 16

uint8_t **carrier_duty**

Set carrier duty cycle, carrier_duty should be less than 8 (increment every 12.5%)

uint8_t **pulse_width_in_os**

Set pulse width of first pulse in one shot mode = (carrier period)*(pulse_width_in_os + 1), should be less then 16

mcpwm_carrier_os_t **carrier_os_mode**

Enable or disable carrier oneshot mode

mcpwm_carrier_out_ivt_t **carrier_ivt_mode**

Invert output of carrier

struct **mcpwm_capture_config_t**

MCPWM config capture structure.

Public Members

mcpwm_capture_on_edge_t **cap_edge**

Set capture edge

uint32_t **cap_prescale**

Prescale of capture signal, ranging from 1 to 256

cap_isr_cb_t **capture_cb**

User defined capture event callback, running under interrupt context

void ***user_data**

User defined ISR callback function args

struct **mcpwm_sync_config_t**

MCPWM config sync structure.

Public Members

mcpwm_sync_signal_t **sync_sig**

Set sync input signal that will cause timer to sync

uint32_t **timer_val**

Counter value to be set after sync, in 0 ~ 999, unit: 1 / 1000 * peak

mcpwm_timer_direction_t **count_direction**

Counting direction to be set after sync

Macros

MCPWM_OPR_A

Deprecated:

MCPWM_OPR_B

Deprecated:

MCPWM_OPR_MAX

Deprecated:

MCPWM_SELCT_SYNC0

MCPWM_SELCT_SYNC1

MCPWM_SELCT_SYNC2

MCPWM_NO_CHANGE_IN_MCPWMXA

Deprecated:

No change in MCPWMXA output

MCPWM_FORCE_MCPWMXA_LOW

Deprecated:

Make MCPWMXA output low

MCPWM_FORCE_MCPWMXA_HIGH

Deprecated:

Make MCPWMXA output high

MCPWM_TOG_MCPWMXA

Deprecated:

Make MCPWMXA output toggle

MCPWM_NO_CHANGE_IN_MCPWMXB

Deprecated:

No change in MCPWMXB output

MCPWM_FORCE_MCPWMXB_LOW

Deprecated:

Make MCPWMXB output low

MCPWM_FORCE_MCPWMXB_HIGH

Deprecated:

Make MCPWMXB output high

MCPWM_TOG_MCPWMXB

Deprecated:

Make MCPWMXB output toggle

Type Definitions

typedef *mcpwm_generator_t* **mcpwm_operator_t**

Deprecated:

typedef *mcpwm_output_action_t* **mcpwm_action_on_pwmxa_t**

Deprecated:

MCPWM select action to be taken on MCPWMXA when fault occurs

typedef *mcpwm_output_action_t* **mcpwm_action_on_pwmxb_t**

Deprecated:

MCPWM select action to be taken on MCPWMXB when fault occurs

typedef *mcpwm_capture_signal_t* **mcpwm_capture_channel_id_t**

MCPWM capture channel ID alias.

typedef bool (***cap_isr_cb_t**)(*mcpwm_unit_t* mcpwm, *mcpwm_capture_channel_id_t* cap_channel, const *cap_event_data_t* *edata, void *user_data)

Type of capture event callback.

Note: Since this an ISR callback so do not do anything that may block and call APIs that is designed to be used within ISR(usually has '_ISR' postfix)

Param mcpwm MCPWM unit(0-1)
Param cap_channel capture channel ID
Param edata Capture event data, contains capture edge and capture value, fed by the driver
Param user_data User registered data, passed from *mcpwm_capture_config_t*
Return Whether a task switch is needed after the callback function returns, this is usually due to the callback wakes up some high priority task.

Enumerations

enum **mcpwm_io_signals_t**

IO signals for the MCPWM.

- 6 MCPWM output pins that generate PWM signals
- 3 MCPWM fault input pins to detect faults like overcurrent, overvoltage, etc.
- 3 MCPWM sync input pins to synchronize MCPWM outputs signals
- 3 MCPWM capture input pins to gather feedback from controlled motors, using e.g. hall sensors

Values:

enumerator **MCPWM0A**

PWM0A output pin

enumerator **MCPWM0B**

PWM0B output pin

enumerator **MCPWM1A**

PWM1A output pin

enumerator **MCPWM1B**

PWM1B output pin

enumerator **MCPWM2A**

PWM2A output pin

enumerator **MCPWM2B**

PWM2B output pin

enumerator **MCPWM_SYNC_0**

SYNC0 input pin

enumerator **MCPWM_SYNC_1**

SYNC1 input pin

enumerator **MCPWM_SYNC_2**

SYNC2 input pin

enumerator **MCPWM_FAULT_0**

FAULT0 input pin

enumerator **MCPWM_FAULT_1**

FAULT1 input pin

enumerator **MCPWM_FAULT_2**

FAULT2 input pin

enumerator **MCPWM_CAP_0**

CAP0 input pin

enumerator **MCPWM_CAP_1**

CAP1 input pin

enumerator **MCPWM_CAP_2**

CAP2 input pin

enum **mcpwm_unit_t**

Select MCPWM unit.

Values:

enumerator **MCPWM_UNIT_0**

MCPWM unit0 selected

enumerator **MCPWM_UNIT_1**

MCPWM unit1 selected

enumerator **MCPWM_UNIT_MAX**

Max number of MCPWM units

enum **mcpwm_timer_t**

Select MCPWM timer.

Values:

enumerator **MCPWM_TIMER_0**

Select MCPWM timer0

enumerator **MCPWM_TIMER_1**

Select MCPWM timer1

enumerator **MCPWM_TIMER_2**

Select MCPWM timer2

enumerator **MCPWM_TIMER_MAX**

Max number of timers in a unit

enum **mcpwm_generator_t**

Select MCPWM operator.

Values:

enumerator **MCPWM_GEN_A**

Select MCPWMXA, where ‘X’ is operator number

enumerator **MCPWM_GEN_B**

Select MCPWMXB, where ‘X’ is operator number

enumerator **MCPWM_GEN_MAX**

Num of generators to each operator of MCPWM

enum **mcpwm_carrier_os_t**

MCPWM carrier oneshot mode, in this mode the width of the first pulse of carrier can be programmed.

Values:

enumerator **MCPWM_ONESHOT_MODE_DIS**

Enable oneshot mode

enumerator **MCPWM_ONESHOT_MODE_EN**

Disable oneshot mode

enum **mcpwm_carrier_out_ivt_t**

MCPWM carrier output inversion, high frequency carrier signal active with MCPWM signal is high.

Values:

enumerator **MCPWM_CARRIER_OUT_IVT_DIS**

Enable carrier output inversion

enumerator **MCPWM_CARRIER_OUT_IVT_EN**

Disable carrier output inversion

enum **mcpwm_fault_signal_t**

MCPWM select fault signal input.

Values:

enumerator **MCPWM_SELECT_F0**

Select F0 as input

enumerator **MCPWM_SELECT_F1**

Select F1 as input

enumerator **MCPWM_SELECT_F2**

Select F2 as input

enum **mcpwm_sync_signal_t**

MCPWM select sync signal input.

Values:

enumerator **MCPWM_SELECT_NO_INPUT**

No sync input selected

enumerator **MCPWM_SELECT_TIMER0_SYNC**

Select software sync signal from timer0 as input

enumerator **MCPWM_SELECT_TIMER1_SYNC**

Select software sync signal from timer1 as input

enumerator **MCPWM_SELECT_TIMER2_SYNC**

Select software sync signal from timer2 as input

enumerator **MCPWM_SELECT_GPIO_SYNC0**

Select GPIO SYNC0 as input

enumerator **MCPWM_SELECT_GPIO_SYNC1**

Select GPIO SYNC1 as input

enumerator **MCPWM_SELECT_GPIO_SYNC2**

Select GPIO SYNC2 as input

enum **mcpwm_timer_sync_trigger_t**

MCPWM timer sync event trigger.

Values:

enumerator **MCPWM_SWSYNC_SOURCE_SYNCIN**

the input sync signal will be routed to its sync output path

enumerator **MCPWM_SWSYNC_SOURCE_TEZ**

sync signal generated when timer counts to zero

enumerator **MCPWM_SWSYNC_SOURCE_TEP**

sync signal generated when timer counts to peak

enumerator **MCPWM_SWSYNC_SOURCE_DISABLED**

timer does not generate sync signals

enum **mcpwm_fault_input_level_t**

MCPWM select triggering level of fault signal.

Values:

enumerator **MCPWM_LOW_LEVEL_TGR**

Fault condition occurs when fault input signal goes from high to low

enumerator **MCPWM_HIGH_LEVEL_TGR**

Fault condition occurs when fault input signal goes low to high

enum **mcpwm_capture_on_edge_t**

MCPWM select capture starts from which edge.

Values:

enumerator **MCPWM_NEG_EDGE**

Capture the negative edge

enumerator **MCPWM_POS_EDGE**

Capture the positive edge

enumerator **MCPWM_BOTH_EDGE**

Capture both edges

enum **mcpwm_intr_t**

Interrupt masks for MCPWM capture.

Values:

enumerator **MCPWM_LL_INTR_CAP0**

Capture 0 happened.

enumerator **MCPWM_LL_INTR_CAP1**

Capture 1 happened.

enumerator **MCPWM_LL_INTR_CAP2**

Capture 2 happened.

enum **mcpwm_counter_type_t**

Select type of MCPWM counter.

Values:

enumerator **MCPWM_FREEZE_COUNTER**

Counter freeze

enumerator **MCPWM_UP_COUNTER**

For asymmetric MCPWM

enumerator **MCPWM_DOWN_COUNTER**

For asymmetric MCPWM

enumerator **MCPWM_UP_DOWN_COUNTER**

For symmetric MCPWM, frequency is half of MCPWM frequency set

enumerator **MCPWM_COUNTER_MAX**

Maximum counter mode

enum **mcpwm_duty_type_t**

Select type of MCPWM duty cycle mode.

Values:

enumerator **MCPWM_DUTY_MODE_0**

Active high duty, i.e. duty cycle proportional to high time for asymmetric MCPWM

enumerator **MCPWM_DUTY_MODE_1**

Active low duty, i.e. duty cycle proportional to low time for asymmetric MCPWM, out of phase(inverted) MCPWM

enumerator **MCPWM_HAL_GENERATOR_MODE_FORCE_LOW**

enumerator **MCPWM_HAL_GENERATOR_MODE_FORCE_HIGH**

enumerator **MCPWM_DUTY_MODE_MAX**

Num of duty cycle modes

enum **mcpwm_deadtime_type_t**

MCPWM deadtime types, used to generate deadtime, RED refers to rising edge delay and FED refers to falling edge delay.

Values:

enumerator **MCPWM_DEADTIME_BYPASS**

Bypass the deadtime

enumerator **MCPWM_BYPASS_RED**

MCPWMXA Out = MCPWMXA In with no delay, MCPWMXB Out = MCPWMXA In with falling edge delay

enumerator **MCPWM_BYPASS_FED**

MCPWMXA Out = MCPWMXA In with rising edge delay, MCPWMXB Out = MCPWMXB In with no delay

enumerator **MCPWM_ACTIVE_HIGH_MODE**

MCPWMXA Out = MCPWMXA In with rising edge delay, MCPWMXB Out = MCPWMXA In with falling edge delay

enumerator **MCPWM_ACTIVE_LOW_MODE**

MCPWMXA Out = MCPWMXA In with compliment of rising edge delay, MCPWMXB Out = MCPWMXA In with compliment of falling edge delay

enumerator **MCPWM_ACTIVE_HIGH_COMPLIMENT_MODE**

MCPWMXA Out = MCPWMXA In with rising edge delay, MCPWMXB = MCPWMXA In with compliment of falling edge delay

enumerator **MCPWM_ACTIVE_LOW_COMPLIMENT_MODE**

MCPWMXA Out = MCPWMXA In with compliment of rising edge delay, MCPWMXB Out = MCPWMXA In with falling edge delay

enumerator **MCPWM_ACTIVE_RED_FED_FROM_PWMXA**

MCPWMXA Out = MCPWMXB Out = MCPWMXA In with rising edge delay as well as falling edge delay

enumerator **MCPWM_ACTIVE_RED_FED_FROM_PWMXB**

MCPWMXA Out = MCPWMXB Out = MCPWMXB In with rising edge delay as well as falling edge delay

enumerator **MCPWM_DEADTIME_TYPE_MAX**

Maximum number of supported dead time modes

enum **mcpwm_output_action_t**

MCPWM select action to be taken on the output when event happens.

Values:

enumerator **MCPWM_ACTION_NO_CHANGE**

No change in the output

enumerator **MCPWM_ACTION_FORCE_LOW**

Make output low

enumerator **MCPWM_ACTION_FORCE_HIGH**

Make output high

enumerator **MCPWM_ACTION_TOGGLE**

Make output toggle

enum **mcpwm_capture_signal_t**

MCPWM select capture signal input.

Values:

enumerator **MCPWM_SELECT_CAP0**

Select CAP0 as input

enumerator **MCPWM_SELECT_CAP1**

Select CAP1 as input

enumerator **MCPWM_SELECT_CAP2**

Select CAP2 as input

2.3.10 Pulse Counter (PCNT)

Introduction

The PCNT (Pulse Counter) module is designed to count the number of rising and/or falling edges of an input signal. Each pulse counter unit has a 16-bit signed counter register and two channels that can be configured to either increment or decrement the counter. Each channel has a signal input that accepts signal edges to be detected, as well as a control input that can be used to enable or disable the signal input. The inputs have optional filters that can be used to discard unwanted glitches in the signal.

Functionality Overview

Description of functionality of this API has been broken down into four sections:

- *Configuration* - describes counter's configuration parameters and how to setup the counter.
- *Operating the Counter* - provides information on control functions to pause, measure and clear the counter.
- *Filtering Pulses* - describes options to filtering pulses and the counter control signals.
- *Using Interrupts* - presents how to trigger interrupts on specific states of the counter.

Configuration

The PCNT module has 8 independent counting "units" numbered from 0 to 7. In the API they are referred to using `pcnt_unit_t`. Each unit has two independent channels numbered as 0 and 1 and specified with `pcnt_channel_t`.

The configuration is provided separately per unit's channel using `pcnt_config_t` and covers:

- The unit and the channel number this configuration refers to.
- GPIO numbers of the pulse input and the pulse gate input.
- Two pairs of parameters: *pcnt_ctrl_mode_t* and *pcnt_count_mode_t* to define how the counter reacts depending on the the status of control signal and how counting is done positive / negative edge of the pulses.
- Two limit values (minimum / maximum) that are used to establish watchpoints and trigger interrupts when the pulse count is meeting particular limit.

Setting up of particular channel is then done by calling a function *pcnt_unit_config()* with above *pcnt_config_t* as the input parameter.

To disable the pulse or the control input pin in configuration, provide PCNT_PIN_NOT_USED instead of the GPIO number.

Operating the Counter

After doing setup with *pcnt_unit_config()*, the counter immediately starts to operate. The accumulated pulse count can be checked by calling *pcnt_get_counter_value()*.

There are couple of functions that allow to control the counter' s operation: *pcnt_counter_pause()*, *pcnt_counter_resume()* and *pcnt_counter_clear()*

It is also possible to dynamically change the previously set up counter modes with *pcnt_unit_config()* by calling *pcnt_set_mode()*.

If desired, the pulse input pin and the control input pin may be changed "on the fly" using *pcnt_set_pin()*. To disable particular input provide as a function parameter PCNT_PIN_NOT_USED instead of the GPIO number.

Note: For the counter not to miss any pulses, the pulse duration should be longer than one APB_CLK cycle (12.5 ns). The pulses are sampled on the edges of the APB_CLK clock and may be missed, if fall between the edges. This applies to counter operation with or without a *filer*.

Filtering Pulses

The PCNT unit features filters on each of the pulse and control inputs, adding the option to ignore short glitches in the signals.

The length of ignored pulses is provided in APB_CLK clock cycles by calling *pcnt_set_filter_value()*. The current filter setting may be checked with *pcnt_get_filter_value()*. The APB_CLK clock is running at 80 MHz.

The filter is put into operation / suspended by calling *pcnt_filter_enable()* / *pcnt_filter_disable()*.

Using Interrupts

There are five counter state watch events, defined in *pcnt_evt_type_t*, that are able to trigger an interrupt. The event happens on the pulse counter reaching specific values:

- Minimum or maximum count values: counter_l_lim or counter_h_lim provided in *pcnt_config_t* as discussed in *Configuration*
- Threshold 0 or Threshold 1 values set using function *pcnt_set_event_value()*.
- Pulse count = 0

To register, enable or disable an interrupt to service the above events, call *pcnt_isr_register()*, *pcnt_intr_enable()*. and *pcnt_intr_disable()*. To enable or disable events on reaching threshold values, you will also need to call functions *pcnt_event_enable()* and *pcnt_event_disable()*.

In order to check what are the threshold values currently set, use function *pcnt_get_event_value()*.

Application Example

- Pulse counter with control signal and event interrupt example: peripherals/pcnt/pulse_count_event.
- Parse the signal generated from rotary encoder: peripherals/pcnt/rotary_encoder.

API Reference

Header File

- components/driver/include/driver/pcnt.h

Functions

esp_err_t **pcnt_unit_config** (const *pcnt_config_t* *pcnt_config)

Configure Pulse Counter unit.

Note: This function will disable three events: PCNT_EVT_L_LIM, PCNT_EVT_H_LIM, PCNT_EVT_ZERO.

Parameters **pcnt_config** –Pointer of Pulse Counter unit configure parameter

Returns

- ESP_OK Success
- ESP_ERR_INVALID_STATE pcnt driver already initialized
- ESP_ERR_INVALID_ARG Parameter error

esp_err_t **pcnt_get_counter_value** (*pcnt_unit_t* pcnt_unit, int16_t *count)

Get pulse counter value.

Parameters

- **pcnt_unit** –Pulse Counter unit number
- **count** –Pointer to accept counter value

Returns

- ESP_OK Success
- ESP_ERR_INVALID_STATE pcnt driver has not been initialized
- ESP_ERR_INVALID_ARG Parameter error

esp_err_t **pcnt_counter_pause** (*pcnt_unit_t* pcnt_unit)

Pause PCNT counter of PCNT unit.

Parameters **pcnt_unit** –PCNT unit number

Returns

- ESP_OK Success
- ESP_ERR_INVALID_STATE pcnt driver has not been initialized
- ESP_ERR_INVALID_ARG Parameter error

esp_err_t **pcnt_counter_resume** (*pcnt_unit_t* pcnt_unit)

Resume counting for PCNT counter.

Parameters **pcnt_unit** –PCNT unit number, select from pcnt_unit_t

Returns

- ESP_OK Success
- ESP_ERR_INVALID_STATE pcnt driver has not been initialized
- ESP_ERR_INVALID_ARG Parameter error

esp_err_t **pcnt_counter_clear** (*pcnt_unit_t* pcnt_unit)

Clear and reset PCNT counter value to zero.

Parameters **pcnt_unit** –PCNT unit number, select from pcnt_unit_t

Returns

- ESP_OK Success
- ESP_ERR_INVALID_STATE pcnt driver has not been initialized
- ESP_ERR_INVALID_ARG Parameter error

esp_err_t **pcnt_intr_enable**(*pcnt_unit_t* pcnt_unit)

Enable PCNT interrupt for PCNT unit.

Note: Each Pulse counter unit has five watch point events that share the same interrupt. Configure events with pcnt_event_enable() and pcnt_event_disable()

Parameters **pcnt_unit** –PCNT unit number

Returns

- ESP_OK Success
- ESP_ERR_INVALID_STATE pcnt driver has not been initialized
- ESP_ERR_INVALID_ARG Parameter error

esp_err_t **pcnt_intr_disable**(*pcnt_unit_t* pcnt_unit)

Disable PCNT interrupt for PCNT unit.

Parameters **pcnt_unit** –PCNT unit number

Returns

- ESP_OK Success
- ESP_ERR_INVALID_STATE pcnt driver has not been initialized
- ESP_ERR_INVALID_ARG Parameter error

esp_err_t **pcnt_event_enable**(*pcnt_unit_t* unit, *pcnt_evt_type_t* evt_type)

Enable PCNT event of PCNT unit.

Parameters

- **unit** –PCNT unit number
- **evt_type** –Watch point event type. All enabled events share the same interrupt (one interrupt per pulse counter unit).

Returns

- ESP_OK Success
- ESP_ERR_INVALID_STATE pcnt driver has not been initialized
- ESP_ERR_INVALID_ARG Parameter error

esp_err_t **pcnt_event_disable**(*pcnt_unit_t* unit, *pcnt_evt_type_t* evt_type)

Disable PCNT event of PCNT unit.

Parameters

- **unit** –PCNT unit number
- **evt_type** –Watch point event type. All enabled events share the same interrupt (one interrupt per pulse counter unit).

Returns

- ESP_OK Success
- ESP_ERR_INVALID_STATE pcnt driver has not been initialized
- ESP_ERR_INVALID_ARG Parameter error

esp_err_t **pcnt_set_event_value**(*pcnt_unit_t* unit, *pcnt_evt_type_t* evt_type, int16_t value)

Set PCNT event value of PCNT unit.

Parameters

- **unit** –PCNT unit number
- **evt_type** –Watch point event type. All enabled events share the same interrupt (one interrupt per pulse counter unit).
- **value** –Counter value for PCNT event

Returns

- ESP_OK Success

- ESP_ERR_INVALID_STATE pcnt driver has not been initialized
- ESP_ERR_INVALID_ARG Parameter error

esp_err_t **pcnt_get_event_value**(*pcnt_unit_t* unit, *pcnt_evt_type_t* evt_type, int16_t *value)

Get PCNT event value of PCNT unit.

Parameters
- **unit** –PCNT unit number
- **evt_type** –Watch point event type. All enabled events share the same interrupt (one interrupt per pulse counter unit).
- **value** –Pointer to accept counter value for PCNT event

Returns
- ESP_OK Success
- ESP_ERR_INVALID_STATE pcnt driver has not been initialized
- ESP_ERR_INVALID_ARG Parameter error

esp_err_t **pcnt_get_event_status**(*pcnt_unit_t* unit, uint32_t *status)

Get PCNT event status of PCNT unit.

Parameters
- **unit** –PCNT unit number
- **status** –Pointer to accept event status word

Returns
- ESP_OK Success
- ESP_ERR_INVALID_STATE pcnt driver has not been initialized
- ESP_ERR_INVALID_ARG Parameter error

esp_err_t **pcnt_isr_unregister**(*pcnt_isr_handle_t* handle)

Unregister PCNT interrupt handler (registered by pcnt_isr_register), the handler is an ISR. The handler will be attached to the same CPU core that this function is running on. If the interrupt service is registered by pcnt_isr_service_install, please call pcnt_isr_service_uninstall instead.

Parameters **handle** –handle to unregister the ISR service.

Returns
- ESP_OK Success
- ESP_ERR_NOT_FOUND Can not find the interrupt that matches the flags.
- ESP_ERR_INVALID_ARG Function pointer error.

esp_err_t **pcnt_isr_register**(void (*fn)(void*), void *arg, int intr_alloc_flags, *pcnt_isr_handle_t* *handle)

Register PCNT interrupt handler, the handler is an ISR. The handler will be attached to the same CPU core that this function is running on. Please do not use pcnt_isr_service_install if this function was called.

Parameters
- **fn** –Interrupt handler function.
- **arg** –Parameter for handler function
- **intr_alloc_flags** –Flags used to allocate the interrupt. One or multiple (ORred) ESP_INTR_FLAG_* values. See esp_intr_alloc.h for more info.
- **handle** –Pointer to return handle. If non-NULL, a handle for the interrupt will be returned here. Calling pcnt_isr_unregister to unregister this ISR service if needed, but only if the handle is not NULL.

Returns
- ESP_OK Success
- ESP_ERR_NOT_FOUND Can not find the interrupt that matches the flags.
- ESP_ERR_INVALID_ARG Function pointer error.

esp_err_t **pcnt_set_pin**(*pcnt_unit_t* unit, *pcnt_channel_t* channel, int pulse_io, int ctrl_io)

Configure PCNT pulse signal input pin and control input pin.

Note: Set the signal input to PCNT_PIN_NOT_USED if unused.

Parameters

- **unit** –PCNT unit number
- **channel** –PCNT channel number
- **pulse_io** –Pulse signal input GPIO
- **ctrl_io** –Control signal input GPIO

Returns

- ESP_OK Success
- ESP_ERR_INVALID_STATE pcnt driver has not been initialized
- ESP_ERR_INVALID_ARG Parameter error

esp_err_t **pcnt_filter_enable**(*pcnt_unit_t* unit)

Enable PCNT input filter.

Parameters **unit** –PCNT unit number

Returns

- ESP_OK Success
- ESP_ERR_INVALID_STATE pcnt driver has not been initialized
- ESP_ERR_INVALID_ARG Parameter error

esp_err_t **pcnt_filter_disable**(*pcnt_unit_t* unit)

Disable PCNT input filter.

Parameters **unit** –PCNT unit number

Returns

- ESP_OK Success
- ESP_ERR_INVALID_STATE pcnt driver has not been initialized
- ESP_ERR_INVALID_ARG Parameter error

esp_err_t **pcnt_set_filter_value**(*pcnt_unit_t* unit, uint16_t filter_val)

Set PCNT filter value.

Note: filter_val is a 10-bit value, so the maximum filter_val should be limited to 1023.

Parameters

- **unit** –PCNT unit number
- **filter_val** –PCNT signal filter value, counter in APB_CLK cycles. Any pulses lasting shorter than this will be ignored when the filter is enabled.

Returns

- ESP_OK Success
- ESP_ERR_INVALID_STATE pcnt driver has not been initialized
- ESP_ERR_INVALID_ARG Parameter error

esp_err_t **pcnt_get_filter_value**(*pcnt_unit_t* unit, uint16_t *filter_val)

Get PCNT filter value.

Parameters

- **unit** –PCNT unit number
- **filter_val** –Pointer to accept PCNT filter value.

Returns

- ESP_OK Success
- ESP_ERR_INVALID_STATE pcnt driver has not been initialized
- ESP_ERR_INVALID_ARG Parameter error

esp_err_t **pcnt_set_mode**(*pcnt_unit_t* unit, *pcnt_channel_t* channel, *pcnt_count_mode_t* pos_mode, *pcnt_count_mode_t* neg_mode, *pcnt_ctrl_mode_t* hctrl_mode, *pcnt_ctrl_mode_t* lctrl_mode)

Set PCNT counter mode.

Parameters

- **unit** –PCNT unit number
- **channel** –PCNT channel number
- **pos_mode** –Counter mode when detecting positive edge
- **neg_mode** –Counter mode when detecting negative edge
- **hctrl_mode** –Counter mode when control signal is high level
- **lctrl_mode** –Counter mode when control signal is low level

Returns

- ESP_OK Success
- ESP_ERR_INVALID_STATE pcnt driver has not been initialized
- ESP_ERR_INVALID_ARG Parameter error

esp_err_t **pcnt_isr_handler_add**(*pcnt_unit_t* unit, void (*isr_handler)(void*), void *args)

Add ISR handler for specified unit.

Call this function after using pcnt_isr_service_install() to install the PCNT driver's ISR handler service.

The ISR handlers do not need to be declared with IRAM_ATTR, unless you pass the ESP_INTR_FLAG_IRAM flag when allocating the ISR in pcnt_isr_service_install().

This ISR handler will be called from an ISR. So there is a stack size limit (configurable as "ISR stack size" in menuconfig). This limit is smaller compared to a global PCNT interrupt handler due to the additional level of indirection.

Parameters

- **unit** –PCNT unit number
- **isr_handler** –Interrupt handler function.
- **args** –Parameter for handler function

Returns

- ESP_OK Success
- ESP_ERR_INVALID_STATE pcnt driver has not been initialized
- ESP_ERR_INVALID_ARG Parameter error

esp_err_t **pcnt_isr_service_install**(int intr_alloc_flags)

Install PCNT ISR service.

Note: We can manage different interrupt service for each unit. This function will use the default ISR handle service, Calling pcnt_isr_service_uninstall to uninstall the default service if needed. Please do not use pcnt_isr_register if this function was called.

Parameters **intr_alloc_flags** –Flags used to allocate the interrupt. One or multiple (ORred) ESP_INTR_FLAG_* values. See esp_intr_alloc.h for more info.

Returns

- ESP_OK Success
- ESP_ERR_INVALID_STATE pcnt driver has not been initialized
- ESP_ERR_NO_MEM No memory to install this service
- ESP_ERR_INVALID_STATE ISR service already installed

void **pcnt_isr_service_uninstall**(void)

Uninstall PCNT ISR service, freeing related resources.

esp_err_t **pcnt_isr_handler_remove**(*pcnt_unit_t* unit)

Delete ISR handler for specified unit.

Parameters **unit** –PCNT unit number

Returns

- ESP_OK Success
- ESP_ERR_INVALID_STATE pcnt driver has not been initialized
- ESP_ERR_INVALID_ARG Parameter error

Structures

struct **pcnt_config_t**

Pulse Counter configuration for a single channel.

Public Members

int **pulse_gpio_num**

Pulse input GPIO number, if you want to use GPIO16, enter pulse_gpio_num = 16, a negative value will be ignored

int **ctrl_gpio_num**

Control signal input GPIO number, a negative value will be ignored

pcnt_ctrl_mode_t **lctrl_mode**

PCNT low control mode

pcnt_ctrl_mode_t **hctrl_mode**

PCNT high control mode

pcnt_count_mode_t **pos_mode**

PCNT positive edge count mode

pcnt_count_mode_t **neg_mode**

PCNT negative edge count mode

int16_t **counter_h_lim**

Maximum counter value

int16_t **counter_l_lim**

Minimum counter value

pcnt_unit_t **unit**

PCNT unit number

pcnt_channel_t **channel**

the PCNT channel

Macros

PCNT_PIN_NOT_USED

When selected for a pin, this pin will not be used

PCNT_MODE_KEEP

Control mode: won’t change counter mode

PCNT_MODE_REVERSE

Control mode: invert counter mode(increase -> decrease, decrease -> increase)

PCNT_MODE_DISABLE

Control mode: Inhibit counter(counter value will not change in this condition)

PCNT_MODE_MAX

PCNT_COUNT_DIS

Counter mode: Inhibit counter(counter value will not change in this condition)

PCNT_COUNT_INC

Counter mode: Increase counter value

PCNT_COUNT_DEC

Counter mode: Decrease counter value

PCNT_COUNT_MAX

Type Definitions

typedef *intr_handle_t* **pcnt_isr_handle_t**

typedef *pcnt_channel_level_action_t* **pcnt_ctrl_mode_t**

Selection of available modes that determine the counter's action depending on the state of the control signal's input GPIO.

Note: Configuration covers two actions, one for high, and one for low level on the control input

typedef *pcnt_channel_edge_action_t* **pcnt_count_mode_t**

Selection of available modes that determine the counter's action on the edge of the pulse signal's input GPIO.

Note: Configuration covers two actions, one for positive, and one for negative edge on the pulse input

Enumerations

enum **pcnt_port_t**

PCNT port number, the max port number is (PCNT_PORT_MAX - 1).

Values:

enumerator **PCNT_PORT_0**

PCNT port 0

enumerator **PCNT_PORT_MAX**

PCNT port max

enum **pcnt_unit_t**

Selection of all available PCNT units.

Values:

enumerator **PCNT_UNIT_0**

PCNT unit 0

enumerator **PCNT_UNIT_1**

PCNT unit 1

enumerator **PCNT_UNIT_2**

PCNT unit 2

enumerator **PCNT_UNIT_3**

PCNT unit 3

enumerator **PCNT_UNIT_4**

PCNT unit 4

enumerator **PCNT_UNIT_5**

PCNT unit 5

enumerator **PCNT_UNIT_6**

PCNT unit 6

enumerator **PCNT_UNIT_7**

PCNT unit 7

enumerator **PCNT_UNIT_MAX**

enum **pcnt_channel_t**

Selection of channels available for a single PCNT unit.

Values:

enumerator **PCNT_CHANNEL_0**

PCNT channel 0

enumerator **PCNT_CHANNEL_1**

PCNT channel 1

enumerator **PCNT_CHANNEL_MAX**

enum **pcnt_evt_type_t**

Selection of counter’s events the may trigger an interrupt.

Values:

enumerator **PCNT_EVT_THRES_1**

PCNT watch point event: threshold1 value event

enumerator **PCNT_EVT_THRES_0**

PCNT watch point event: threshold0 value event

enumerator **PCNT_EVT_L_LIM**

PCNT watch point event: Minimum counter value

enumerator **PCNT_EVT_H_LIM**

PCNT watch point event: Maximum counter value

enumerator **PCNT_EVT_ZERO**

PCNT watch point event: counter value zero event

enumerator **PCNT_EVT_MAX**

Header File

- components/hal/include/hal/pcnt_types.h

Enumerations

enum **pcnt_channel_level_action_t**

PCNT channel action on control level.

Values:

enumerator **PCNT_CHANNEL_LEVEL_ACTION_KEEP**

Keep current count mode

enumerator **PCNT_CHANNEL_LEVEL_ACTION_INVERSE**

Invert current count mode (increase -> decrease, decrease -> increase)

enumerator **PCNT_CHANNEL_LEVEL_ACTION_HOLD**

Hold current count value

enum **pcnt_channel_edge_action_t**

PCNT channel action on signal edge.

Values:

enumerator **PCNT_CHANNEL_EDGE_ACTION_HOLD**

Hold current count value

enumerator **PCNT_CHANNEL_EDGE_ACTION_INCREASE**

Increase count value

enumerator **PCNT_CHANNEL_EDGE_ACTION_DECREASE**

Decrease count value

enum **pcnt_unit_count_sign_t**

PCNT unit counter value' s sign.

Values:

enumerator **PCNT_UNIT_COUNT_SIGN_ZERO_POS**

positive value to zero

enumerator **PCNT_UNIT_COUNT_SIGN_ZERO_NEG**

negative value to zero

enumerator **PCNT_UNIT_COUNT_SIGN_NEG**

counter value negative

enumerator **PCNT_UNIT_COUNT_SIGN_POS**

counter value positive

2.3.11 Remote Control (RMT)

The RMT (Remote Control) module driver can be used to send and receive infrared remote control signals. Due to flexibility of RMT module, the driver can also be used to generate or receive many other types of signals.

The signal, which consists of a series of pulses, is generated by RMT's transmitter based on a list of values. The values define the pulse duration and a binary level, see below. The transmitter can also provide a carrier and modulate it with provided pulses.

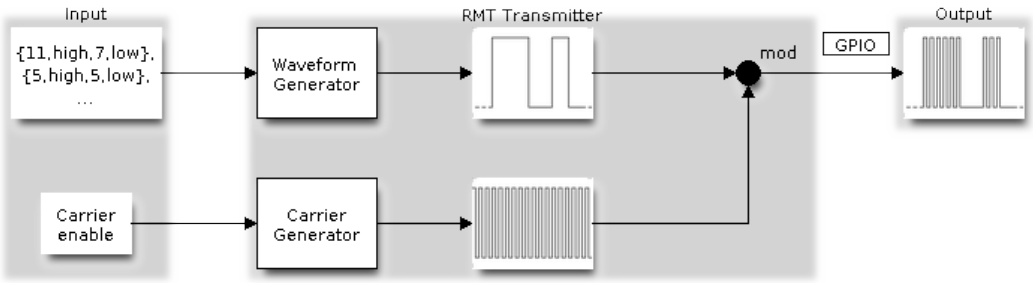

Fig. 16: RMT Transmitter Overview

The reverse operation is performed by the receiver, where a series of pulses is decoded into a list of values containing the pulse duration and binary level. A filter may be applied to remove high frequency noise from the input signal.

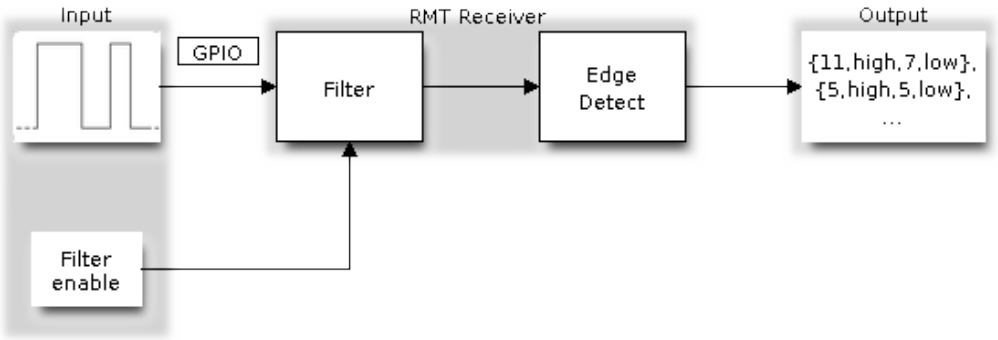

Fig. 17: RMT Receiver Overview

There couple of typical steps to setup and operate the RMT and they are discussed in the following sections:

1. *Configure Driver*
2. *Transmit Data* or *Receive Data*

3. *Change Operation Parameters*
4. *Use Interrupts*

The RMT has eight channels numbered from zero to seven. Each channel is able to independently transmit or receive data. They are referred to using indexes defined in structure `rmt_channel_t`.

Configure Driver

There are several parameters that define how particular channel operates. Most of these parameters are configured by setting specific members of `rmt_config_t` structure. Some of the parameters are common to both transmit or receive mode, and some are mode specific. They are all discussed below.

Common Parameters

- The **channel** to be configured, select one from the `rmt_channel_t` enumerator.
- The RMT **operation mode** - whether this channel is used to transmit or receive data, selected by setting a **rmt_mode** members to one of the values from `rmt_mode_t`.
- What is the **pin number** to transmit or receive RMT signals, selected by setting **gpio_num**.
- How many **memory blocks** will be used by the channel, set with **mem_block_num**.
- Extra miscellaneous parameters for the channel can be set in the **flags**.
  - When **RMT_CHANNEL_FLAGS_AWARE_DFS** is set, RMT channel will take REF_TICK or XTAL as source clock. The benefit is, RMT channel can continue work even when APB clock is changing. See *power_management* for more information.
  - When **RMT_CHANNEL_FLAGS_INVERT_SIG** is set, the driver will invert the RMT signal sending to or receiving from the channel. It just works like an external inverter connected to the GPIO of certain RMT channel.
- A **clock divider**, that will determine the range of pulse length generated by the RMT transmitter or discriminated by the receiver. Selected by setting **clk_div** to a value within [1 .. 255] range. The RMT source clock is typically APB CLK, 80Mhz by default. But when **RMT_CHANNEL_FLAGS_AWARE_DFS** is set in **flags**, RMT source clock is changed to REF_TICK or XTAL.

Note: The period of a square wave after the clock divider is called a ‘tick’. The length of the pulses generated by the RMT transmitter or discriminated by the receiver is configured in number of ‘ticks’.

There are also couple of specific parameters that should be set up depending if selected channel is configured in *Transmit Mode* or *Receive Mode*:

Transmit Mode When configuring channel in transmit mode, set **tx_config** and the following members of `rmt_tx_config_t`:

- Transmit the currently configured data items in a loop - **loop_en**
- Enable the RMT carrier signal - **carrier_en**
- Frequency of the carrier in Hz - **carrier_freq_hz**
- Duty cycle of the carrier signal in percent (%) - **carrier_duty_percent**
- Level of the RMT output, when the carrier is applied - **carrier_level**
- Enable the RMT output if idle - **idle_output_en**
- Set the signal level on the RMT output if idle - **idle_level**

Receive Mode In receive mode, set **rx_config** and the following members of `rmt_rx_config_t`:

- Enable a filter on the input of the RMT receiver - **filter_en**
- A threshold of the filter, set in the number of ticks - **filter_ticks_thresh**. Pulses shorter than this setting will be filtered out. Note, that the range of entered tick values is [0..255].

- A pulse length threshold that will turn the RMT receiver idle, set in number of ticks - **idle_threshold**. The receiver will ignore pulses longer than this setting.

Finalize Configuration Once the *rmt_config_t* structure is populated with parameters, it should be then invoked with *rmt_config()* to make the configuration effective.

The last configuration step is installation of the driver in memory by calling *rmt_driver_install()*. If `rx_buf_size` parameter of this function is > 0, then a ring buffer for incoming data will be allocated. A default ISR handler will be installed, see a note in *Use Interrupts*.

Now, depending on how the channel is configured, we are ready to either *Transmit Data* or *Receive Data*. This is described in next two sections.

Transmit Data

Before being able to transmit some RMT pulses, we need to define the pulse pattern. The minimum pattern recognized by the RMT controller, later called an ‘item’, is provided in a structure `rmt_item32_t`. Each item consists of two pairs of two values. The first value in a pair describes the signal duration in ticks and is 15 bits long, the second provides the signal level (high or low) and is contained in a single bit. A block of couple of items and the structure of an item is presented below.

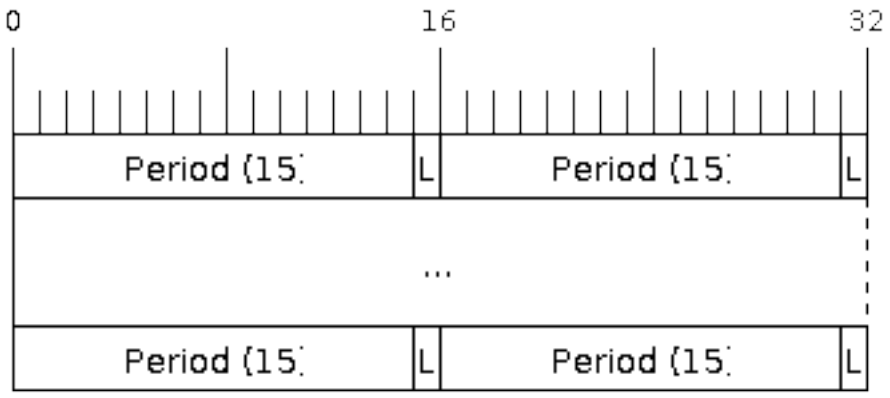

Fig. 18: Structure of RMT items (L - signal level)

For a simple example how to define a block of items see peripherals/rmt/morse_code.

The items are provided to the RMT controller by calling function *rmt_write_items()*. This function also automatically triggers start of transmission. It may be called to wait for transmission completion or exit just after transmission start. In such case you can wait for the transmission end by calling *rmt_wait_tx_done()*. This function does not limit the number of data items to transmit. It is using an interrupt to successively copy the new data chunks to RMT’s internal memory as previously provided data are sent out.

Another way to provide data for transmission is by calling *rmt_fill_tx_items()*. In this case transmission is not started automatically. To control the transmission process use *rmt_tx_start()* and *rmt_tx_stop()*. The number of items to sent is restricted by the size of memory blocks allocated in the RMT controller’s internal memory, see *rmt_set_mem_block_num()*.

Receive Data

Warning: RMT RX channel can't receive packet whose items are larger than its memory block size. If you set the memory block number to 1, then this RX channel can't receive packet with more than 64 items. This is a hardware limitation.

Before starting the receiver we need some storage for incoming items. The RMT controller has 512 x 32-bits of internal RAM shared between all eight channels.

In typical scenarios it is not enough as an ultimate storage for all incoming (and outgoing) items. Therefore this API supports retrieval of incoming items on the fly to save them in a ring buffer of a size defined by the user. The size is provided when calling *rmt_driver_install()* discussed above. To get a handle to this buffer call *rmt_get_ringbuf_handle()*.

With the above steps complete we can start the receiver by calling *rmt_rx_start()* and then move to checking what's inside the buffer. To do so, you can use common FreeRTOS functions that interact with the ring buffer. Please see an example how to do it in peripherals/rmt/ir_protocols.

To stop the receiver, call *rmt_rx_stop()*.

Change Operation Parameters

Previously described function *rmt_config()* provides a convenient way to set several configuration parameters in one shot. This is usually done on application start. Then, when the application is running, the API provides an alternate way to update individual parameters by calling dedicated functions. Each function refers to the specific RMT channel provided as the first input parameter. Most of the functions have *_get_* counterpart to read back the currently configured value.

Parameters Common to Transmit and Receive Mode

- Selection of a GPIO pin number on the input or output of the RMT - *rmt_set_gpio()*
- Number of memory blocks allocated for the incoming or outgoing data - *rmt_set_mem_pd()*
- Setting of the clock divider - *rmt_set_clk_div()*
- Selection of the clock source, note that currently one clock source is supported, the APB clock which is 80Mhz - *rmt_set_source_clk()*

Transmit Mode Parameters

- Enable or disable the loop back mode for the transmitter - *rmt_set_tx_loop_mode()*
- Binary level on the output to apply the carrier - *rmt_set_tx_carrier()*, selected from *rmt_carrier_level_t*
- Determines the binary level on the output when transmitter is idle - *rmt_set_idle_level()*, selected from *rmt_idle_level_t*

Receive Mode Parameters

- The filter setting - *rmt_set_rx_filter()*
- The receiver threshold setting - *rmt_set_rx_idle_thresh()*
- Whether the transmitter or receiver is entitled to access RMT's memory - *rmt_set_memory_owner()*, selection is from *rmt_mem_owner_t*.

Use Interrupts

Registering of an interrupt handler for the RMT controller is done be calling *rmt_isr_register()*.

Note: When calling *rmt_driver_install()* to use the system RMT driver, a default ISR is being installed. In such a case you cannot register a generic ISR handler with *rmt_isr_register()*.

The RMT controller triggers interrupts on four specific events describes below. To enable interrupts on these events, the following functions are provided:

- The RMT receiver has finished receiving a signal - *rmt_set_rx_intr_en()*
- The RMT transmitter has finished transmitting the signal - *rmt_set_tx_intr_en()*
- The number of events the transmitter has sent matches a threshold value *rmt_set_tx_thr_intr_en()*
- Ownership to the RMT memory block has been violated - *rmt_set_err_intr_en()*

Setting or clearing an interrupt enable mask for specific channels and events may be also done by calling *rmt_set_intr_enable_mask()* or *rmt_clr_intr_enable_mask()*.

When servicing an interrupt within an ISR, the interrupt need to explicitly cleared. To do so, set specific bits described as `RMT.int_clr.val.chN_event_name` and defined as a `volatile struct` in soc/esp32/include/soc/rmt_struct.h, where N is the RMT channel number [0, n] and the `event_name` is one of four events described above.

If you do not need an ISR anymore, you can deregister it by calling a function *rmt_isr_deregister()*.

Warning: It's not recommended for users to register an interrupt handler in their applications. RMT driver is highly dependent on interrupt, especially when doing transaction in a ping-pong way, so the driver itself has registered a default handler called `rmt_driver_isr_default`. Instead, if what you want is to get a notification when transaction is done, go ahead with *rmt_register_tx_end_callback()*.

Uninstall Driver

If the RMT driver has been installed with *rmt_driver_install()* for some specific period of time and then not required, the driver may be removed to free allocated resources by calling *rmt_driver_uninstall()*.

Application Examples

- Using RMT to send morse code: peripherals/rmt/morse_code.
- Using RMT to drive RGB LED strip: peripherals/rmt/led_strip.
- NEC remote control TX and RX example: peripherals/rmt/ir_protocols.
- Musical buzzer example: peripherals/rmt/musical_buzzer.

API Reference

Header File

- components/driver/include/driver/rmt.h

Functions

esp_err_t **rmt_set_clk_div**(*rmt_channel_t* channel, uint8_t div_cnt)

Set RMT clock divider, channel clock is divided from source clock.

Parameters

- **channel** –RMT channel
- **div_cnt** –RMT counter clock divider

Returns

- ESP_ERR_INVALID_ARG Parameter error
- ESP_OK Success

esp_err_t **rmt_get_clk_div**(*rmt_channel_t* channel, uint8_t *div_cnt)

Get RMT clock divider, channel clock is divided from source clock.

Parameters
- **channel** –RMT channel
- **div_cnt** –pointer to accept RMT counter divider

Returns
- ESP_ERR_INVALID_ARG Parameter error
- ESP_OK Success

esp_err_t **rmt_set_rx_idle_thresh**(*rmt_channel_t* channel, uint16_t thresh)

Set RMT RX idle threshold value.

In receive mode, when no edge is detected on the input signal for longer than idle_thres channel clock cycles, the receive process is finished.

Parameters
- **channel** –RMT channel
- **thresh** –RMT RX idle threshold

Returns
- ESP_ERR_INVALID_ARG Parameter error
- ESP_OK Success

esp_err_t **rmt_get_rx_idle_thresh**(*rmt_channel_t* channel, uint16_t *thresh)

Get RMT idle threshold value.

In receive mode, when no edge is detected on the input signal for longer than idle_thres channel clock cycles, the receive process is finished.

Parameters
- **channel** –RMT channel
- **thresh** –pointer to accept RMT RX idle threshold value

Returns
- ESP_ERR_INVALID_ARG Parameter error
- ESP_OK Success

esp_err_t **rmt_set_mem_block_num**(*rmt_channel_t* channel, uint8_t rmt_mem_num)

Set RMT memory block number for RMT channel.

This function is used to configure the amount of memory blocks allocated to channel n The 8 channels share a 512x32-bit RAM block which can be read and written by the processor cores over the APB bus, as well as read by the transmitters and written by the receivers.

The RAM address range for channel n is start_addr_CHn to end_addr_CHn, which are defined by: Memory block start address is RMT_CHANNEL_MEM(n) (in soc/rmt_reg.h), that is, start_addr_chn = RMT base address + 0x800 + 64 ∗ 4 ∗ n, and end_addr_chn = RMT base address + 0x800 + 64 ∗ 4 ∗ n + 64 ∗ 4 ∗ RMT_MEM_SIZE_CHn mod 512 ∗ 4

Note: If memory block number of one channel is set to a value greater than 1, this channel will occupy the memory block of the next channel. Channel 0 can use at most 8 blocks of memory, accordingly channel 7 can only use one memory block.

Parameters
- **channel** –RMT channel
- **rmt_mem_num** –RMT RX memory block number, one block has 64 * 32 bits.

Returns
- ESP_ERR_INVALID_ARG Parameter error
- ESP_OK Success

esp_err_t **rmt_get_mem_block_num**(*rmt_channel_t* channel, uint8_t *rmt_mem_num)

Get RMT memory block number.

Parameters
- **channel** –RMT channel
- **rmt_mem_num** –Pointer to accept RMT RX memory block number

Returns
- ESP_ERR_INVALID_ARG Parameter error
- ESP_OK Success

esp_err_t **rmt_set_tx_carrier**(*rmt_channel_t* channel, bool carrier_en, uint16_t high_level, uint16_t low_level, *rmt_carrier_level_t* carrier_level)

Configure RMT carrier for TX signal.

Set different values for carrier_high and carrier_low to set different frequency of carrier. The unit of carrier_high/low is the source clock tick, not the divided channel counter clock.

Parameters
- **channel** –RMT channel
- **carrier_en** –Whether to enable output carrier.
- **high_level** –High level duration of carrier
- **low_level** –Low level duration of carrier.
- **carrier_level** –Configure the way carrier wave is modulated for channel.
  - 1’b1:transmit on low output level
  - 1’b0:transmit on high output level

Returns
- ESP_ERR_INVALID_ARG Parameter error
- ESP_OK Success

esp_err_t **rmt_set_mem_pd**(*rmt_channel_t* channel, bool pd_en)

Set RMT memory in low power mode.

Reduce power consumed by memory. 1:memory is in low power state.

Parameters
- **channel** –RMT channel
- **pd_en** –RMT memory low power enable.

Returns
- ESP_ERR_INVALID_ARG Parameter error
- ESP_OK Success

esp_err_t **rmt_get_mem_pd**(*rmt_channel_t* channel, bool *pd_en)

Get RMT memory low power mode.

Parameters
- **channel** –RMT channel
- **pd_en** –Pointer to accept RMT memory low power mode.

Returns
- ESP_ERR_INVALID_ARG Parameter error
- ESP_OK Success

esp_err_t **rmt_tx_start**(*rmt_channel_t* channel, bool tx_idx_rst)

Set RMT start sending data from memory.

Parameters
- **channel** –RMT channel
- **tx_idx_rst** –Set true to reset memory index for TX. Otherwise, transmitter will continue sending from the last index in memory.

Returns
- ESP_ERR_INVALID_ARG Parameter error
- ESP_OK Success

esp_err_t **rmt_tx_stop**(*rmt_channel_t* channel)

Set RMT stop sending.

Parameters **channel** –RMT channel

Returns

- ESP_ERR_INVALID_ARG Parameter error
- ESP_OK Success

esp_err_t **rmt_rx_start**(*rmt_channel_t* channel, bool rx_idx_rst)

Set RMT start receiving data.

Parameters

- **channel** –RMT channel
- **rx_idx_rst** –Set true to reset memory index for receiver. Otherwise, receiver will continue receiving data to the last index in memory.

Returns

- ESP_ERR_INVALID_ARG Parameter error
- ESP_OK Success

esp_err_t **rmt_rx_stop**(*rmt_channel_t* channel)

Set RMT stop receiving data.

Parameters **channel** –RMT channel

Returns

- ESP_ERR_INVALID_ARG Parameter error
- ESP_OK Success

esp_err_t **rmt_tx_memory_reset**(*rmt_channel_t* channel)

Reset RMT TX memory.

Parameters **channel** –RMT channel

Returns

- ESP_ERR_INVALID_ARG Parameter error
- ESP_OK Success

esp_err_t **rmt_rx_memory_reset**(*rmt_channel_t* channel)

Reset RMT RX memory.

Parameters **channel** –RMT channel

Returns

- ESP_ERR_INVALID_ARG Parameter error
- ESP_OK Success

esp_err_t **rmt_set_memory_owner**(*rmt_channel_t* channel, *rmt_mem_owner_t* owner)

Set RMT memory owner.

Note: Setting memroy is only valid for RX channel.

Parameters

- **channel** –RMT channel
- **owner** –To set when the transmitter or receiver can process the memory of channel.

Returns

- ESP_ERR_INVALID_ARG Parameter error
- ESP_OK Success

esp_err_t **rmt_get_memory_owner**(*rmt_channel_t* channel, *rmt_mem_owner_t* *owner)

Get RMT memory owner.

Parameters

- **channel** –RMT channel

- **owner** –Pointer to get memory owner.

Returns

- ESP_ERR_INVALID_ARG Parameter error
- ESP_OK Success

esp_err_t **rmt_set_tx_loop_mode**(*rmt_channel_t* channel, bool loop_en)

Set RMT tx loop mode.

Parameters

- **channel** –RMT channel
- **loop_en** –Enable RMT transmitter loop sending mode. If set true, transmitter will continue sending from the first data to the last data in channel over and over again in a loop.

Returns

- ESP_ERR_INVALID_ARG Parameter error
- ESP_OK Success

esp_err_t **rmt_get_tx_loop_mode**(*rmt_channel_t* channel, bool *loop_en)

Get RMT tx loop mode.

Parameters

- **channel** –RMT channel
- **loop_en** –Pointer to accept RMT transmitter loop sending mode.

Returns

- ESP_ERR_INVALID_ARG Parameter error
- ESP_OK Success

esp_err_t **rmt_set_rx_filter**(*rmt_channel_t* channel, bool rx_filter_en, uint8_t thresh)

Set RMT RX filter.

In receive mode, channel will ignore input pulse when the pulse width is smaller than threshold. Counted in source clock, not divided counter clock.

Parameters

- **channel** –RMT channel
- **rx_filter_en** –To enable RMT receiver filter.
- **thresh** –Threshold of pulse width for receiver.

Returns

- ESP_ERR_INVALID_ARG Parameter error
- ESP_OK Success

esp_err_t **rmt_set_source_clk**(*rmt_channel_t* channel, *rmt_source_clk_t* base_clk)

Set RMT source clock.

RMT module has two clock sources:

a. APB clock which is 80Mhz
b. REF tick clock, which would be 1Mhz (not supported in this version).

Parameters

- **channel** –RMT channel
- **base_clk** –To choose source clock for RMT module.

Returns

- ESP_ERR_INVALID_ARG Parameter error
- ESP_OK Success

esp_err_t **rmt_get_source_clk**(*rmt_channel_t* channel, *rmt_source_clk_t* *src_clk)

Get RMT source clock.

RMT module has two clock sources:

a. APB clock which is 80Mhz
b. REF tick clock, which would be 1Mhz (not supported in this version).

Parameters
- **channel** –RMT channel
- **src_clk** –Pointer to accept source clock for RMT module.

Returns
- ESP_ERR_INVALID_ARG Parameter error
- ESP_OK Success

esp_err_t **rmt_set_idle_level**(*rmt_channel_t* channel, bool idle_out_en, *rmt_idle_level_t* level)

Set RMT idle output level for transmitter.

Parameters
- **channel** –RMT channel
- **idle_out_en** –To enable idle level output.
- **level** –To set the output signal's level for channel in idle state.

Returns
- ESP_ERR_INVALID_ARG Parameter error
- ESP_OK Success

esp_err_t **rmt_get_idle_level**(*rmt_channel_t* channel, bool *idle_out_en, *rmt_idle_level_t* *level)

Get RMT idle output level for transmitter.

Parameters
- **channel** –RMT channel
- **idle_out_en** –Pointer to accept value of enable idle.
- **level** –Pointer to accept value of output signal's level in idle state for specified channel.

Returns
- ESP_ERR_INVALID_ARG Parameter error
- ESP_OK Success

esp_err_t **rmt_get_status**(*rmt_channel_t* channel, uint32_t *status)

Get RMT status.

Parameters
- **channel** –RMT channel
- **status** –Pointer to accept channel status. Please refer to RMT_CHnSTATUS_REG(n=0~7) in `rmt_reg.h` for more details of each field.

Returns
- ESP_ERR_INVALID_ARG Parameter error
- ESP_OK Success

esp_err_t **rmt_set_rx_intr_en**(*rmt_channel_t* channel, bool en)

Set RMT RX interrupt enable.

Parameters
- **channel** –RMT channel
- **en** –enable or disable RX interrupt.

Returns
- ESP_ERR_INVALID_ARG Parameter error
- ESP_OK Success

esp_err_t **rmt_set_err_intr_en**(*rmt_channel_t* channel, bool en)

Set RMT RX error interrupt enable.

Parameters
- **channel** –RMT channel
- **en** –enable or disable RX err interrupt.

Returns
- ESP_ERR_INVALID_ARG Parameter error
- ESP_OK Success

esp_err_t **rmt_set_tx_intr_en**(*rmt_channel_t* channel, bool en)

Set RMT TX interrupt enable.

Parameters
- **channel** –RMT channel
- **en** –enable or disable TX interrupt.

Returns
- ESP_ERR_INVALID_ARG Parameter error
- ESP_OK Success

esp_err_t **rmt_set_tx_thr_intr_en**(*rmt_channel_t* channel, bool en, uint16_t evt_thresh)

Set RMT TX threshold event interrupt enable.

An interrupt will be triggered when the number of transmitted items reaches the threshold value

Parameters
- **channel** –RMT channel
- **en** –enable or disable TX event interrupt.
- **evt_thresh** –RMT event interrupt threshold value

Returns
- ESP_ERR_INVALID_ARG Parameter error
- ESP_OK Success

esp_err_t **rmt_set_gpio**(*rmt_channel_t* channel, *rmt_mode_t* mode, *gpio_num_t* gpio_num, bool invert_signal)

Configure the GPIO used by RMT channel.

Parameters
- **channel** –RMT channel
- **mode** –RMT mode, either RMT_MODE_TX or RMT_MODE_RX
- **gpio_num** –GPIO number, which is connected with certain RMT signal
- **invert_signal** –Invert RMT signal physically by GPIO matrix

Returns
- ESP_ERR_INVALID_ARG Configure RMT GPIO failed because of wrong parameter
- ESP_OK Configure RMT GPIO successfully

esp_err_t **rmt_config**(const *rmt_config_t* *rmt_param)

Configure RMT parameters.

Parameters **rmt_param** –RMT parameter struct

Returns
- ESP_ERR_INVALID_ARG Parameter error
- ESP_OK Success

esp_err_t **rmt_isr_register**(void (*fn)(void*), void *arg, int intr_alloc_flags, *rmt_isr_handle_t* *handle)

Register RMT interrupt handler, the handler is an ISR.

The handler will be attached to the same CPU core that this function is running on.

Note: If you already called rmt_driver_install to use system RMT driver, please do not register ISR handler again.

Parameters
- **fn** –Interrupt handler function.
- **arg** –Parameter for the handler function
- **intr_alloc_flags** –Flags used to allocate the interrupt. One or multiple (ORred) ESP_INTR_FLAG_* values. See esp_intr_alloc.h for more info.
- **handle** –If non-zero, a handle to later clean up the ISR gets stored here.

Returns
- ESP_OK Success
- ESP_ERR_INVALID_ARG Function pointer error.
- ESP_FAIL System driver installed, can not register ISR handler for RMT

esp_err_t **rmt_isr_deregister**(*rmt_isr_handle_t* handle)

Deregister previously registered RMT interrupt handler.

Parameters **handle** –Handle obtained from rmt_isr_register

Returns

- ESP_OK Success
- ESP_ERR_INVALID_ARG Handle invalid

esp_err_t **rmt_fill_tx_items**(*rmt_channel_t* channel, const rmt_item32_t *item, uint16_t item_num, uint16_t mem_offset)

Fill memory data of channel with given RMT items.

Parameters

- **channel** –RMT channel
- **item** –Pointer of items.
- **item_num** –RMT sending items number.
- **mem_offset** –Index offset of memory.

Returns

- ESP_ERR_INVALID_ARG Parameter error
- ESP_OK Success

esp_err_t **rmt_driver_install**(*rmt_channel_t* channel, size_t rx_buf_size, int intr_alloc_flags)

Initialize RMT driver.

Parameters

- **channel** –RMT channel
- **rx_buf_size** –Size of RMT RX ringbuffer. Can be 0 if the RX ringbuffer is not used.
- **intr_alloc_flags** –Flags for the RMT driver interrupt handler. Pass 0 for default flags. See esp_intr_alloc.h for details. If ESP_INTR_FLAG_IRAM is used, please do not use the memory allocated from psram when calling rmt_write_items.

Returns

- ESP_ERR_INVALID_STATE Driver is already installed, call rmt_driver_uninstall first.
- ESP_ERR_NO_MEM Memory allocation failure
- ESP_ERR_INVALID_ARG Parameter error
- ESP_OK Success

esp_err_t **rmt_driver_uninstall**(*rmt_channel_t* channel)

Uninstall RMT driver.

Parameters **channel** –RMT channel

Returns

- ESP_ERR_INVALID_ARG Parameter error
- ESP_OK Success

esp_err_t **rmt_get_channel_status**(*rmt_channel_status_result_t* *channel_status)

Get the current status of eight channels.

Note: Do not call this function if it is possible that `rmt_driver_uninstall` will be called at the same time.

Parameters **channel_status** –**[out]** store the current status of each channel

Returns

- ESP_ERR_INVALID_ARG Parameter is NULL
- ESP_OK Success

esp_err_t **rmt_get_counter_clock**(*rmt_channel_t* channel, uint32_t *clock_hz)

Get speed of channel' s internal counter clock.

Parameters

- **channel** –RMT channel

- **clock_hz** –**[out]** counter clock speed, in hz

Returns

- ESP_ERR_INVALID_ARG Parameter is NULL
- ESP_OK Success

esp_err_t **rmt_write_items**(*rmt_channel_t* channel, const rmt_item32_t *rmt_item, int item_num, bool wait_tx_done)

RMT send waveform from rmt_item array.

This API allows user to send waveform with any length.

Note: This function will not copy data, instead, it will point to the original items, and send the waveform items. If wait_tx_done is set to true, this function will block and will not return until all items have been sent out. If wait_tx_done is set to false, this function will return immediately, and the driver interrupt will continue sending the items. We must make sure the item data will not be damaged when the driver is still sending items in driver interrupt.

Parameters

- **channel** –RMT channel
- **rmt_item** –head point of RMT items array. If ESP_INTR_FLAG_IRAM is used, please do not use the memory allocated from psram when calling rmt_write_items.
- **item_num** –RMT data item number.
- **wait_tx_done** –
  - If set 1, it will block the task and wait for sending done.
  - If set 0, it will not wait and return immediately.

Returns

- ESP_ERR_INVALID_ARG Parameter error
- ESP_OK Success

esp_err_t **rmt_wait_tx_done**(*rmt_channel_t* channel, TickType_t wait_time)

Wait RMT TX finished.

Parameters

- **channel** –RMT channel
- **wait_time** –Maximum time in ticks to wait for transmission to be complete. If set 0, return immediately with ESP_ERR_TIMEOUT if TX is busy (polling).

Returns

- ESP_OK RMT Tx done successfully
- ESP_ERR_TIMEOUT Exceeded the ‘wait_time’ given
- ESP_ERR_INVALID_ARG Parameter error
- ESP_FAIL Driver not installed

esp_err_t **rmt_get_ringbuf_handle**(*rmt_channel_t* channel, *RingbufHandle_t* *buf_handle)

Get ringbuffer from RMT.

Users can get the RMT RX ringbuffer handle, and process the RX data.

Parameters

- **channel** –RMT channel
- **buf_handle** –Pointer to buffer handle to accept RX ringbuffer handle.

Returns

- ESP_ERR_INVALID_ARG Parameter error
- ESP_OK Success

esp_err_t **rmt_translator_init**(*rmt_channel_t* channel, *sample_to_rmt_t* fn)

Init rmt translator and register user callback. The callback will convert the raw data that needs to be sent to rmt format. If a channel is initialized more than once, tha user callback will be replaced by the later.

Parameters

- **channel** –RMT channel .

- **fn** –Point to the data conversion function.

Returns

- ESP_FAIL Init fail.
- ESP_OK Init success.

esp_err_t **rmt_translator_set_context** (*rmt_channel_t* channel, void *context)

Set user context for the translator of specific channel.

Parameters

- **channel** –RMT channel number
- **context** –User context

Returns

- ESP_FAIL Set context fail
- ESP_OK Set context success

esp_err_t **rmt_translator_get_context** (const size_t *item_num, void **context)

Get the user context set by ‘rmt_translator_set_context’.

Note: This API must be invoked in the RMT translator callback function, and the first argument must be the actual parameter ‘item_num’ you got in that callback function.

Parameters

- **item_num** –Address of the memory which contains the number of translated items (It’s from driver’s internal memroy)
- **context** –Returned User context

Returns

- ESP_FAIL Get context fail
- ESP_OK Get context success

esp_err_t **rmt_write_sample** (*rmt_channel_t* channel, const uint8_t *src, size_t src_size, bool wait_tx_done)

Translate uint8_t type of data into rmt format and send it out. Requires rmt_translator_init to init the translator first.

Parameters

- **channel** –RMT channel .
- **src** –Pointer to the raw data.
- **src_size** –The size of the raw data.
- **wait_tx_done** –Set true to wait all data send done.

Returns

- ESP_FAIL Send fail
- ESP_OK Send success

rmt_tx_end_callback_t **rmt_register_tx_end_callback** (*rmt_tx_end_fn_t* function, void *arg)

Registers a callback that will be called when transmission ends.

Called by rmt_driver_isr_default in interrupt context.

Note: Requires rmt_driver_install to install the default ISR handler.

Parameters

- **function** –Function to be called from the default interrupt handler or NULL.
- **arg** –Argument which will be provided to the callback when it is called.

Returns the previous callback settings (members will be set to NULL if there was none)

esp_err_t **rmt_memory_rw_rst** (*rmt_channel_t* channel)

Reset RMT TX/RX memory index.

Parameters **channel** –RMT channel

Returns

- ESP_ERR_INVALID_ARG Parameter error
- ESP_OK Success

void **rmt_set_intr_enable_mask**(uint32_t mask)

Set mask value to RMT interrupt enable register.

Parameters **mask** –Bit mask to set to the register

void **rmt_clr_intr_enable_mask**(uint32_t mask)

Clear mask value to RMT interrupt enable register.

Parameters **mask** –Bit mask to clear the register

esp_err_t **rmt_set_pin**(*rmt_channel_t* channel, *rmt_mode_t* mode, *gpio_num_t* gpio_num)

Set RMT pin.

Parameters

- **channel** –RMT channel
- **mode** –TX or RX mode for RMT
- **gpio_num** –GPIO number to transmit or receive the signal.

Returns

- ESP_ERR_INVALID_ARG Parameter error
- ESP_OK Success

Structures

struct **rmt_tx_config_t**

Data struct of RMT TX configure parameters.

Public Members

uint32_t **carrier_freq_hz**

RMT carrier frequency

rmt_carrier_level_t **carrier_level**

Level of the RMT output, when the carrier is applied

rmt_idle_level_t **idle_level**

RMT idle level

uint8_t **carrier_duty_percent**

RMT carrier duty (%)

bool **carrier_en**

RMT carrier enable

bool **loop_en**

Enable sending RMT items in a loop

bool **idle_output_en**

RMT idle level output enable

struct **rmt_rx_config_t**

Data struct of RMT RX configure parameters.

Public Members

uint16_t **idle_threshold**

RMT RX idle threshold

uint8_t **filter_ticks_thresh**

RMT filter tick number

bool **filter_en**

RMT receiver filter enable

struct **rmt_config_t**

Data struct of RMT configure parameters.

Public Members

rmt_mode_t **rmt_mode**

RMT mode: transmitter or receiver

rmt_channel_t **channel**

RMT channel

gpio_num_t **gpio_num**

RMT GPIO number

uint8_t **clk_div**

RMT channel counter divider

uint8_t **mem_block_num**

RMT memory block number

uint32_t **flags**

RMT channel extra configurations, OR'd with RMT_CHANNEL_FLAGS_[*]

rmt_tx_config_t **tx_config**

RMT TX parameter

rmt_rx_config_t **rx_config**

RMT RX parameter

struct **rmt_tx_end_callback_t**

Structure encapsulating a RMT TX end callback.

Public Members

rmt_tx_end_fn_t **function**

Function which is called on RMT TX end

void ***arg**

Optional argument passed to function

Macros

RMT_CHANNEL_FLAGS_AWARE_DFS

Channel can work during APB clock scaling

RMT_CHANNEL_FLAGS_INVERT_SIG

Invert RMT signal

RMT_MEM_ITEM_NUM

Define memory space of each RMT channel (in words = 4 bytes)

RMT_DEFAULT_CONFIG_TX(gpio, channel_id)

Default configuration for Tx channel.

RMT_DEFAULT_CONFIG_RX(gpio, channel_id)

Default configuration for RX channel.

Type Definitions

typedef *intr_handle_t* **rmt_isr_handle_t**

RMT interrupt handle.

typedef void (***rmt_tx_end_fn_t**)(*rmt_channel_t* channel, void *arg)

Type of RMT Tx End callback function.

typedef void (***sample_to_rmt_t**)(const void *src, rmt_item32_t *dest, size_t src_size, size_t wanted_num, size_t *translated_size, size_t *item_num)

User callback function to convert uint8_t type data to rmt format(rmt_item32_t).

This function may be called from an ISR, so, the code should be short and efficient.

Note: In fact, item_num should be a multiple of translated_size, e.g. : When we convert each byte of uint8_t type data to rmt format data, the relation between item_num and translated_size should be `item_num = translated_size*8`.

Param src Pointer to the buffer storing the raw data that needs to be converted to rmt format.
Param dest **[out]** Pointer to the buffer storing the rmt format data.
Param src_size The raw data size.
Param wanted_num The number of rmt format data that wanted to get.
Param translated_size **[out]** The size of the raw data that has been converted to rmt format, it should return 0 if no data is converted in user callback.
Param item_num **[out]** The number of the rmt format data that actually converted to, it can be less than wanted_num if there is not enough raw data, but cannot exceed wanted_num. it should return 0 if no data was converted.

Header File

- components/hal/include/hal/rmt_types.h

Structures

struct **rmt_channel_status_result_t**

Data struct of RMT channel status.

Public Members

rmt_channel_status_t **status**[*RMT_CHANNEL_MAX*]

Store the current status of each channel

Enumerations

enum **rmt_channel_t**

RMT channel ID.

Values:

enumerator **RMT_CHANNEL_0**

RMT channel number 0

enumerator **RMT_CHANNEL_1**

RMT channel number 1

enumerator **RMT_CHANNEL_2**

RMT channel number 2

enumerator **RMT_CHANNEL_3**

RMT channel number 3

enumerator **RMT_CHANNEL_4**

RMT channel number 4

enumerator **RMT_CHANNEL_5**

RMT channel number 5

enumerator **RMT_CHANNEL_6**

RMT channel number 6

enumerator **RMT_CHANNEL_7**

RMT channel number 7

enumerator **RMT_CHANNEL_MAX**

Number of RMT channels

enum **rmt_mem_owner_t**

RMT Internal Memory Owner.

Values:

enumerator **RMT_MEM_OWNER_TX**

RMT RX mode, RMT transmitter owns the memory block

enumerator **RMT_MEM_OWNER_RX**

RMT RX mode, RMT receiver owns the memory block

enumerator **RMT_MEM_OWNER_MAX**

enum **rmt_source_clk_t**

Clock Source of RMT Channel.

Values:

enumerator **RMT_BASECLK_REF**

RMT source clock is REF_TICK, 1MHz by default

enumerator **RMT_BASECLK_APB**

RMT source clock is APB CLK, 80Mhz by default

enumerator **RMT_BASECLK_MAX**

enum **rmt_data_mode_t**

RMT Data Mode.

Note: We highly recommended to use MEM mode not FIFO mode since there will be some gotcha in FIFO mode.

Values:

enumerator **RMT_DATA_MODE_FIFO**

enumerator **RMT_DATA_MODE_MEM**

enumerator **RMT_DATA_MODE_MAX**

enum **rmt_mode_t**

RMT Channel Working Mode (TX or RX)

Values:

enumerator **RMT_MODE_TX**

RMT TX mode

enumerator **RMT_MODE_RX**

RMT RX mode

enumerator **RMT_MODE_MAX**

enum **rmt_idle_level_t**

RMT Idle Level.

Values:

enumerator **RMT_IDLE_LEVEL_LOW**

RMT TX idle level: low Level

enumerator **RMT_IDLE_LEVEL_HIGH**

RMT TX idle level: high Level

enumerator **RMT_IDLE_LEVEL_MAX**

enum **rmt_carrier_level_t**

RMT Carrier Level.

Values:

enumerator **RMT_CARRIER_LEVEL_LOW**

RMT carrier wave is modulated for low Level output

enumerator **RMT_CARRIER_LEVEL_HIGH**

RMT carrier wave is modulated for high Level output

enumerator **RMT_CARRIER_LEVEL_MAX**

enum **rmt_channel_status_t**

RMT Channel Status.

Values:

enumerator **RMT_CHANNEL_UNINIT**

RMT channel uninitialized

enumerator **RMT_CHANNEL_IDLE**

RMT channel status idle

enumerator **RMT_CHANNEL_BUSY**

RMT channel status busy

2.3.12 SD Pull-up Requirements

Espressif hardware products are designed for multiple use cases which may require different pull states on pins. For this reason, the pull state of particular pins on certain products will need to be adjusted to provide the pull-ups required in the SD bus.

SD pull-up requirements apply to cases where ESP32 uses the SPI or SDMMC controller to communicate with SD cards. When an SD card is operating in SPI mode or 1-bit SD mode, the CMD and DATA (DAT0 - DAT3) lines of the SD bus must be pulled up by 10 kOhm resistors. SD cards and SDIO devices should also have pull-ups on all above-mentioned lines (regardless of whether these lines are connected to the host) in order to prevent them from entering a wrong state.

By default, the MTDI bootstrapping pin is incompatible with the DAT2 line pull-up if the flash voltage is 3.3 V. For more information, see *MTDI Strapping Pin* below.

This document has the following structure:

- *Overview of compatibility* between the default pull states on pins of Espressif ' s products and the states required by the SD bus

- *Solutions* - ideas on how to resolve compatibility issues
- *Related information* - other relevant information

Overview of Compatibility

This section provides an overview of compatibility issues that might occur when using SDIO (secure digital input output). Since the SD bus needs to be connected to pull-ups, these issues should be resolved regardless of whether they are related to master (host) or slave (device). Each issue has links to its respective solution. A solution for a host and device may differ.

Systems on a Chip (SoCs)

- ESP32 (except for D2WD versions, see ESP32 datasheet):
  - *No Pull-ups*
  - *Conflicts Between Bootstrap and SDIO on DAT2* for models with 3.3 V flash chip
- ESP32-D2WD:
  - *No Pull-ups*
  - *No Pull-up on GPIO12*

Systems in Packages (SIP)

- ESP32-PICO-D4:
  - *No Pull-ups*
  - *Conflicts Between Bootstrap and SDIO on DAT2*

Modules

- ESP32-WROOM-32 Series, including ESP32-WROOM-32, ESP32-WROOM-32D, ESP32-WROOM-32U, and ESP32-SOLO-1
  - *No Pull-ups*
  - *Conflicts Between Bootstrap and SDIO on DAT2*
- ESP32-WROVER Series, including ESP32-WROVER and ESP32-WROVER-I
  - *No Pull-ups*
- ESP32-WROVER-B Series, including ESP32-WROVER-B and ESP32-WROVER-IB
  - *No Pull-ups*
  - *Conflicts Between Bootstrap and SDIO on DAT2*

Development Boards

- ESP32-PICO-KIT, including PICO-KIT v4.1, v4.0, and v3
  - *No Pull-ups*
  - *Conflicts Between Bootstrap and SDIO on DAT2*
  - *Download Mode Not Working (minor issue)*
- ESP32-DevKitC, including ESP32-DevKitC v4 and v2
  - *No Pull-ups*
  - *Conflicts Between Bootstrap and SDIO on DAT2*
  - *Download Mode Not Working (minor issue)*
- ESP-WROVER-KIT
  - Required pull-ups are provided
  - *Pull-up Conflicts on GPIO13* (v4.1, v3, v2, and v1)
  - *Conflicts Between Bootstrap and SDIO on DAT2* (v4.1, v2, and v1)
  - *Download Mode Not Working (minor issue)* (v2, v1)

  You can determine the version of your ESP23-WROVER-KIT by checking which module is mounted on it:
  - ESP32-WROVER-B on v4.1
  - ESP32-WROVER on v3

    - ESP32-WROOM-32 on v1 and v2
- ESP32-LyraTD-MSC
    - Required pull-ups are provided
    - *Conflicts Between Bootstrap and SDIO on DAT2*
- ESP32-LyraT
    - Required pull-ups are provided
    - *Pull-up Conflicts on GPIO13*

Non-Espressif Hosts Please make sure that your SDIO host provides necessary pull-ups for all SD bus signals.

Solutions

No Pull-ups If you use a development board without pull-ups, you can do the following:

- If your host and slave device are on separate boards, replace one of them with a board that has pull-ups. For the list of Espressif's development boards with pull-ups, go to *Development Boards*.
- Attach external pull-ups by connecting each pin which requires a pull-up to VDD via a 10 kOhm resistor.

Pull-up Conflicts on GPIO13 If DAT3 of your device is not properly pulled up, you have the following options:

- Use 1-bit SD mode and tie the device's DAT3 to VDD
- Use SPI mode
- **Perform one of the following actions on the GPIO13 pin:**
    - Remove the pull-down resistors
    - Attach a pull-up resistor of less than 5 kOhm (2 kOhm suggested)
    - Pull it up or drive it high either by using the host or with 3.3 V on VDD in 1-bit SD mode

Conflicts Between Bootstrap and SDIO on DAT2 There is a conflict between the boot strapping requirements of the ESP32 and the SDIO protocol. For details, see *MTDI Strapping Pin*.

To resolve the conflict, you have the following options:

1. (Recommended) Burn the flash voltage selection eFuses. This will permanently configure the internal regulator's output voltage to 3.3 V, and GPIO12 will not be used as a bootstrapping pin. After that, connect a pull-up resistor to GPIO12.

Warning: Burning eFuses is irreversible! The issue list above might be out of date, so please make sure that the module you are burning has a 3.3 V flash chip by checking the information on http://www.espressif.com/. If you burn the 3.3 V eFuses on a module with a 1.8 V flash chip, the module will stop functioning.

If you are sure that you need to irreversibly burn eFuses, go to your ESP-IDF directory and run the following command:

```
components/esptool_py/esptool/espefuse.py set_flash_voltage 3.3V
```

This command will burn the *XPD_SDIO_TIEH*, *XPD_SDIO_FORCE*, and *XPD_SDIO_REG* eFuses. After all the three eFuses are burned to value 1, the internal VDD_SDIO flash voltage regulator will be permanently set to 3.3 V. You will see the following log if the burning succeeds:

```
espefuse.py v2.6
Connecting....

Enable internal flash voltage regulator (VDD_SDIO) to 3.3 V.
The following eFuses are burned: XPD_SDIO_FORCE, XPD_SDIO_REG, XPD_SDIO_TIEH.
This is an irreversible operation.
Type 'BURN' (all capitals) to continue.
```

(continues on next page)

(continued from previous page)

```
BURN
VDD_SDIO setting complete.
```

To check the status of the eFuses, run:

```
``components/esptool_py/esptool/espefuse.py summary``
```

If running from an automated flashing script, `espefuse.py` has an option `--do-not-confirm`.

For more details, see *ESP32 Technical Reference Manual* [PDF].

2. **If using 1-bit SD mode or SPI mode**, disconnect the DAT2 pin and make sure it is pulled high. For this, do one the following:
   - Leave the host's DAT2 floating and directly connect the slave's DAT2 to VDD.
   - For a slave device, build a firmware with the option `SDIO_SLAVE_FLAG_DAT2_DISABLED` and re-flash your device. This option will help avoid slave detecting on the DAT2 line. Note that 4-bit SD mode will no longer be supported by the standard Card Common Control Register (CCCR); however, the host will not be aware of that. The use of 4-bit SD mode will have to be disabled on the host's side.

No Pull-up on GPIO12 Your module is compatible with the SDIO protocol. Just connect GPIO12 to VDD via a 10 kOhm resistor.

Download Mode Not Working (minor issue) When the GPIO2 pin is pulled high in accordance with the SD pull-up requirements, you cannot enter Download mode because GPIO2 is a bootstrapping pin which in this case must be pulled low.

There are the following solutions:

- For boards that require shorting the GPIO0 and GPIO2 pins with a jumper, put the jumper in place, and the auto-reset circuit will pull GPIO2 low along with GPIO0 before entering Download mode.
- For boards with components attached to their GPIO2 pin (such as pull-down resistors and/or LEDs), check the schematic of your development board for anything connected to GPIO2.
  - **LEDs** would not affect operation in most cases.
  - **Pull-down resistors** can interfere with DAT0 signals and must be removed.

If the above solutions do not work for you, please determine if it is the host or slave device that has pull-ups affecting their GPIO2, then locate these pull-ups and remove them.

Related Information

MTDI Strapping Pin MTDI (GPIO12) is used as a bootstrapping pin to select the output voltage of an internal regulator (VDD_SDIO) which powers the flash chip. This pin has an internal pull-down, so, if left unconnected, it will read low level at startup, which will lead to selecting the default 3.3 V operation.

All ESP32-WROVER modules, excluding ESP32-WROVER-B, use 1.8 V flash and have internal pull-ups on GPIO12. Other modules that use 3.3 V flash have no pull-ups on the GPIO12 pin, and this pin is slightly pulled down internally.

When adding a pull-up to this pin for SD card operation, consider the following:

- For boards that do not use the internal regulator (VDD_SDIO) to power flash, GPIO12 can be pulled high.
- For boards using 1.8 V flash chips, GPIO12 needs to be pulled high at reset. This is fully compatible with the SD card operation.
- On boards using the internal regulator and a 3.3 V flash chip, GPIO12 must be pulled low at reset. This is incompatible with the SD card operation. For reference information on compatibility of Espressif's boards with the SD card operation, see *Overview of Compatibility*.

Internal Pull-ups and Strapping Requirements Using external resistors is always preferable. However, Espressif's products have internal weak pull-up and pull-down resistors which can be enabled and used instead of external ones. Please keep in mind that this solution cannot guarantee reliable SDIO communication.

With that said, the information about these internal pull-ups and strapping requirements can still be useful. Espressif hardware products have different weak internal pull-ups / pull-downs connected to CMD and DATA pins. The table below shows the default pull-up and pull-down states of the CMD and DATA pins.

The following abbreviations are used in the table:

- **WPU**: Weak pull-up inside the SoC
- **WPD**: Weak pull-down inside the SoC
- **PU**: Pull-up inside Espressif modules but outside the SoC

Table 4: Default pull-up and pull-down states of the CMD and DATA pins

GPIO number	Pin Name	Startup State	Strapping Requirement
15	CMD	WPU	
2	DAT0	WPD	Low for Download mode
4	DAT1	WPD	
12	DAT2	PU for 1.8 V flash; WPD for 3.3 V flash	High for 1.8 V flash; Low for 3.3 V flash
13	DAT3	WPU	

2.3.13 SDMMC Host Driver

Overview

ESP32's SDMMC host peripheral has two slots. Each slot can be used independently to connect to an SD card, SDIO device or eMMC chip.

- Slot 0 (*SDMMC_HOST_SLOT_0*) is an 8-bit slot. It uses `HS1_*` signals in the PIN MUX.
- Slot 1 (*SDMMC_HOST_SLOT_1*) is a 4-bit slot. It uses `HS2_*` signals in the PIN MUX.

The slots are connected to ESP32 GPIOs using IO MUX. Pin mappings of these slots are given in the table below.

Signal	Slot 0	Slot 1
CMD	GPIO11	GPIO15
CLK	GPIO6	GPIO14
D0	GPIO7	GPIO2
D1	GPIO8	GPIO4
D2	GPIO9	GPIO12
D3	GPIO10	GPIO13
D4	GPIO16	
D5	GPIO17	
D6	GPIO5	
D7	GPIO18	
CD	any input via GPIO matrix	
WP	any input via GPIO matrix	

The Card Detect and Write Protect signals can be routed to arbitrary pins using the GPIO matrix. To reserve the pins, set the `cd` and `wp` members of the *sdmmc_slot_config_t* structure before calling *sdmmc_host_init_slot()*. Please note that it is not advised to specify a Card Detect pin when working with SDIO cards, because the card detect signal in ESP32 can also trigger SDIO slave interrupt.

Warning: Pins used by Slot 0 (`HS1_*`) are also used to connect the SPI flash chip in ESP32-WROOM and ESP32-WROVER modules. These pins cannot be shared between an SD card and SPI flash. If you need to use Slot 0, connect SPI flash to different pins and set eFuses accordingly.

Supported Speed Modes

SDMMC Host driver supports the following speed modes:

- Default Speed (20 MHz), 1/4-line (with SD cards), and 1/4/8-line (with 3.3 V eMMC)
- High Speed (40 MHz), 1/4-line (with SD cards), and 1/4/8-line (with 3.3 V eMMC)
- High Speed DDR (40 MHz), 4-line (with 3.3 V eMMC)

Speed modes not supported at present:

- High Speed DDR mode, 8-line eMMC
- UHS-I 1.8 V modes, 4-line SD cards

Using the SDMMC Host Driver

Of all the functions listed below, only the following ones will be used directly by most applications:

- *sdmmc_host_init()*
- *sdmmc_host_init_slot()*
- *sdmmc_host_deinit()*

Other functions, such as the ones given below, will be called by the SD/MMC protocol layer via function pointers in the *sdmmc_host_t* structure:

- *sdmmc_host_set_bus_width()*
- *sdmmc_host_set_card_clk()*
- *sdmmc_host_do_transaction()*

Configuring Bus Width and Frequency

With the default initializers for *sdmmc_host_t* and *sdmmc_slot_config_t* (*SDMMC_HOST_DEFAULT* and *SDMMC_SLOT_CONFIG_DEFAULT*), SDMMC Host driver will attempt to use the widest bus supported by the card (4 lines for SD, 8 lines for eMMC) and the frequency of 20 MHz.

In the designs where communication at 40 MHz frequency can be achieved, it is possible to increase the bus frequency by changing the `max_freq_khz` field of *sdmmc_host_t*:

```
sdmmc_host_t host = SDMMC_HOST_DEFAULT();
host.max_freq_khz = SDMMC_FREQ_HIGHSPEED;
```

To configure the bus width, set the `width` field of *sdmmc_slot_config_t*. For example, to set 1-line mode:

```
sdmmc_slot_config_t slot = SDMMC_SLOT_CONFIG_DEFAULT();
slot.width = 1;
```

DDR Mode for eMMC chips

By default, DDR mode will be used if:

- SDMMC host frequency is set to *SDMMC_FREQ_HIGHSPEED* in *sdmmc_host_t* structure, and
- eMMC chip reports DDR mode support in its CSD register

DDR mode places higher requirements for signal integrity. To disable DDR mode while keeping *SDMMC_FREQ_HIGHSPEED* frequency, clear *SDMMC_HOST_FLAG_DDR* bit in `flags` field of *sdmmc_host_t*:

```
sdmmc_host_t host = SDMMC_HOST_DEFAULT();
host.max_freq_khz = SDMMC_FREQ_HIGHSPEED;
host.flags &= ~SDMMC_HOST_FLAG_DDR;
```

See also

See *SD/SDIO/MMC Driver* for the higher level driver which implements the protocol layer.

See *SD SPI Host Driver* for a similar driver which uses the SPI controller and is limited to SD protocol's SPI mode.

See *SD Pull-up Requirements* for pullup support and compatibilities of modules and development kits.

API Reference

Header File

- components/driver/include/driver/sdmmc_host.h

Functions

esp_err_t **sdmmc_host_init**(void)

Initialize SDMMC host peripheral.

Note: This function is not thread safe

Returns

- ESP_OK on success
- ESP_ERR_INVALID_STATE if sdmmc_host_init was already called
- ESP_ERR_NO_MEM if memory can not be allocated

esp_err_t **sdmmc_host_init_slot**(int slot, const *sdmmc_slot_config_t* *slot_config)

Initialize given slot of SDMMC peripheral.

On the ESP32, SDMMC peripheral has two slots:

- Slot 0: 8-bit wide, maps to HS1_* signals in PIN MUX
- Slot 1: 4-bit wide, maps to HS2_* signals in PIN MUX

Card detect and write protect signals can be routed to arbitrary GPIOs using GPIO matrix.

Note: This function is not thread safe

Parameters

- **slot** –slot number (SDMMC_HOST_SLOT_0 or SDMMC_HOST_SLOT_1)
- **slot_config** –additional configuration for the slot

Returns

- ESP_OK on success
- ESP_ERR_INVALID_STATE if host has not been initialized using sdmmc_host_init

esp_err_t **sdmmc_host_set_bus_width**(int slot, size_t width)

Select bus width to be used for data transfer.

SD/MMC card must be initialized prior to this command, and a command to set bus width has to be sent to the card (e.g. SD_APP_SET_BUS_WIDTH)

Note: This function is not thread safe

Parameters
- **slot** –slot number (SDMMC_HOST_SLOT_0 or SDMMC_HOST_SLOT_1)
- **width** –bus width (1, 4, or 8 for slot 0; 1 or 4 for slot 1)

Returns
- ESP_OK on success
- ESP_ERR_INVALID_ARG if slot number or width is not valid

size_t **sdmmc_host_get_slot_width**(int slot)

Get bus width configured in `sdmmc_host_init_slot` to be used for data transfer.

Parameters **slot** –slot number (SDMMC_HOST_SLOT_0 or SDMMC_HOST_SLOT_1)
Returns configured bus width of the specified slot.

esp_err_t **sdmmc_host_set_card_clk**(int slot, uint32_t freq_khz)

Set card clock frequency.

Currently only integer fractions of 40MHz clock can be used. For High Speed cards, 40MHz can be used. For Default Speed cards, 20MHz can be used.

Note: This function is not thread safe

Parameters
- **slot** –slot number (SDMMC_HOST_SLOT_0 or SDMMC_HOST_SLOT_1)
- **freq_khz** –card clock frequency, in kHz

Returns
- ESP_OK on success
- other error codes may be returned in the future

esp_err_t **sdmmc_host_set_bus_ddr_mode**(int slot, bool ddr_enabled)

Enable or disable DDR mode of SD interface.

Parameters
- **slot** –slot number (SDMMC_HOST_SLOT_0 or SDMMC_HOST_SLOT_1)
- **ddr_enabled** –enable or disable DDR mode

Returns
- ESP_OK on success
- ESP_ERR_NOT_SUPPORTED if DDR mode is not supported on this slot

esp_err_t **sdmmc_host_do_transaction**(int slot, *sdmmc_command_t* *cmdinfo)

Send command to the card and get response.

This function returns when command is sent and response is received, or data is transferred, or timeout occurs.

Attention Data buffer passed in cmdinfo->data must be in DMA capable memory

Note: This function is not thread safe w.r.t. init/deinit functions, and bus width/clock speed configuration functions. Multiple tasks can call sdmmc_host_do_transaction as long as other sdmmc_host_* functions are not called.

Parameters
- **slot** –slot number (SDMMC_HOST_SLOT_0 or SDMMC_HOST_SLOT_1)
- **cmdinfo** –pointer to structure describing command and data to transfer

Returns

- ESP_OK on success
- ESP_ERR_TIMEOUT if response or data transfer has timed out
- ESP_ERR_INVALID_CRC if response or data transfer CRC check has failed
- ESP_ERR_INVALID_RESPONSE if the card has sent an invalid response
- ESP_ERR_INVALID_SIZE if the size of data transfer is not valid in SD protocol
- ESP_ERR_INVALID_ARG if the data buffer is not in DMA capable memory

esp_err_t **sdmmc_host_io_int_enable**(int slot)

Enable IO interrupts.

This function configures the host to accept SDIO interrupts.

Parameters **slot** –slot number (SDMMC_HOST_SLOT_0 or SDMMC_HOST_SLOT_1)
Returns returns ESP_OK, other errors possible in the future

esp_err_t **sdmmc_host_io_int_wait**(int slot, TickType_t timeout_ticks)

Block until an SDIO interrupt is received, or timeout occurs.

Parameters

- **slot** –slot number (SDMMC_HOST_SLOT_0 or SDMMC_HOST_SLOT_1)
- **timeout_ticks** –number of RTOS ticks to wait for the interrupt

Returns

- ESP_OK on success (interrupt received)
- ESP_ERR_TIMEOUT if the interrupt did not occur within timeout_ticks

esp_err_t **sdmmc_host_deinit**(void)

Disable SDMMC host and release allocated resources.

Note: This function is not thread safe

Returns

- ESP_OK on success
- ESP_ERR_INVALID_STATE if sdmmc_host_init function has not been called

esp_err_t **sdmmc_host_pullup_en**(int slot, int width)

Enable the pull-ups of sd pins.

This function is deprecated. Please set SDMMC_SLOT_FLAG_INTERNAL_PULLUP flag in *sdmmc_slot_config_t::flags* instead.

Note: You should always place actual pullups on the lines instead of using this function. Internal pullup resistance are high and not sufficient, may cause instability in products. This is for debug or examples only.

Parameters

- **slot** –Slot to use, normally set it to 1.
- **width** –Bit width of your configuration, 1 or 4.

Returns

- ESP_OK: if success
- ESP_ERR_INVALID_ARG: if configured width larger than maximum the slot can support

Structures

struct **sdmmc_slot_config_t**

Extra configuration for SDMMC peripheral slot

Public Members

gpio_num_t **gpio_cd**

GPIO number of card detect signal.

gpio_num_t **cd**

GPIO number of card detect signal; shorter name.

gpio_num_t **gpio_wp**

GPIO number of write protect signal.

gpio_num_t **wp**

GPIO number of write protect signal; shorter name.

uint8_t **width**

Bus width used by the slot (might be less than the max width supported)

uint32_t **flags**

Features used by this slot.

Macros

SDMMC_HOST_SLOT_0

SDMMC slot 0.

SDMMC_HOST_SLOT_1

SDMMC slot 1.

SDMMC_HOST_DEFAULT()

Default *sdmmc_host_t* structure initializer for SDMMC peripheral.

Uses SDMMC peripheral, with 4-bit mode enabled, and max frequency set to 20MHz

SDMMC_SLOT_FLAG_INTERNAL_PULLUP

Enable internal pullups on enabled pins. The internal pullups are insufficient however, please make sure external pullups are connected on the bus. This is for debug / example purpose only.

SDMMC_SLOT_NO_CD

indicates that card detect line is not used

SDMMC_SLOT_NO_WP

indicates that write protect line is not used

SDMMC_SLOT_WIDTH_DEFAULT

use the maximum possible width for the slot

SDMMC_SLOT_CONFIG_DEFAULT()

Macro defining default configuration of SDMMC host slot

2.3.14 SD SPI Host Driver

Overview

The SD SPI host driver allows communicating with one or more SD cards by the SPI Master driver which makes use of the SPI host. Each card is accessed through an SD SPI device represented by an *sdspi_dev_handle_t* spi_handle returned when attaching the device to an SPI bus by calling *sdspi_host_init_device*. The bus should be already initialized before (by *spi_bus_initialize*).

This driver's naming pattern was adopted from the *SDMMC Host* driver due to their similarity. Likewise, the APIs of both drivers are also very similar.

SD SPI driver (access the SD card in SPI mode) offers lower throughput but makes pin selection more flexible. With the help of the GPIO matrix, an SPI peripheral's signals can be routed to any ESP32 pin. Otherwise, if SDMMC host driver is used (See *SDMMC Host*) to access the card in SD 1-bit/4-bit mode, higher throughput can be reached but it requires routing the signals through their dedicated IO_MUX pins only.

With the help of *SPI Master driver* based on, the SPI bus can be shared among SD cards and other SPI devices. The SPI Master driver will handle exclusive access from different tasks.

The SD SPI driver uses software-controlled CS signal.

How to Use

Firstly, use the macro `SDSPI_DEVICE_CONFIG_DEFAULT` to initialize a structure `sdmmc_slot_config_t`, which is used to initialize an SD SPI device. This macro will also fill in the default pin mappings, which is same as the pin mappings of SDMMC host driver. Modify the host and pins of the structure to desired value. Then call *sdspi_host_init_device* to initialize the SD SPI device and attach to its bus.

Then use `SDSPI_HOST_DEFAULT` macro to initialize a `sdmmc_host_t` structure, which is used to store the state and configurations of upper layer (SD/SDIO/MMC driver). Modify the *slot* parameter of the structure to the SD SPI device spi_handle just returned from *sdspi_host_init_device*. Call *sdmmc_card_init* with the `sdmmc_host_t` to probe and initialize the SD card.

Now you can use SD/SDIO/MMC driver functions to access your card!

Other Details

Only the following driver's API functions are normally used by most applications:

- `sdspi_host_init()`
- `sdspi_host_init_device()`
- `sdspi_host_remove_device()`
- `sdspi_host_deinit()`

Other functions are mostly used by the protocol level SD/SDIO/MMC driver via function pointers in the `sdmmc_host_t` structure. For more details, see *the SD/SDIO/MMC Driver*.

Note: SD over SPI does not support speeds above `SDMMC_FREQ_DEFAULT` due to the limitations of the SPI driver.

API Reference

Header File

- components/driver/include/driver/sdspi_host.h

Functions

esp_err_t **sdspi_host_init**(void)

Initialize SD SPI driver.

Note: This function is not thread safe

Returns
- ESP_OK on success
- other error codes may be returned in future versions

esp_err_t **sdspi_host_init_device**(const *sdspi_device_config_t* *dev_config, *sdspi_dev_handle_t* *out_handle)

Attach and initialize an SD SPI device on the specific SPI bus.

Note: This function is not thread safe

Note: Initialize the SPI bus by `spi_bus_initialize()` before calling this function.

Note: The SDIO over sdspi needs an extra interrupt line. Call `gpio_install_isr_service()` before this function.

Parameters
- **dev_config** –pointer to device configuration structure
- **out_handle** –Output of the handle to the sdspi device.

Returns
- ESP_OK on success
- ESP_ERR_INVALID_ARG if sdspi_host_init_device has invalid arguments
- ESP_ERR_NO_MEM if memory can not be allocated
- other errors from the underlying spi_master and gpio drivers

esp_err_t **sdspi_host_remove_device**(*sdspi_dev_handle_t* handle)

Remove an SD SPI device.

Parameters **handle** –Handle of the SD SPI device
Returns Always ESP_OK

esp_err_t **sdspi_host_do_transaction**(*sdspi_dev_handle_t* handle, *sdmmc_command_t* *cmdinfo)

Send command to the card and get response.

This function returns when command is sent and response is received, or data is transferred, or timeout occurs.

Note: This function is not thread safe w.r.t. init/deinit functions, and bus width/clock speed configuration functions. Multiple tasks can call sdspi_host_do_transaction as long as other sdspi_host_* functions are not called.

Parameters
- **handle** –Handle of the sdspi device
- **cmdinfo** –pointer to structure describing command and data to transfer

Returns
- ESP_OK on success
- ESP_ERR_TIMEOUT if response or data transfer has timed out
- ESP_ERR_INVALID_CRC if response or data transfer CRC check has failed

- ESP_ERR_INVALID_RESPONSE if the card has sent an invalid response

esp_err_t **sdspi_host_set_card_clk**(*sdspi_dev_handle_t* host, uint32_t freq_khz)

Set card clock frequency.

Currently only integer fractions of 40MHz clock can be used. For High Speed cards, 40MHz can be used. For Default Speed cards, 20MHz can be used.

Note: This function is not thread safe

Parameters
- **host** –Handle of the sdspi device
- **freq_khz** –card clock frequency, in kHz

Returns
- ESP_OK on success
- other error codes may be returned in the future

esp_err_t **sdspi_host_deinit**(void)

Release resources allocated using sdspi_host_init.

Note: This function is not thread safe

Returns
- ESP_OK on success
- ESP_ERR_INVALID_STATE if sdspi_host_init function has not been called

esp_err_t **sdspi_host_io_int_enable**(*sdspi_dev_handle_t* handle)

Enable SDIO interrupt.

Parameters **handle** –Handle of the sdspi device

Returns
- ESP_OK on success

esp_err_t **sdspi_host_io_int_wait**(*sdspi_dev_handle_t* handle, TickType_t timeout_ticks)

Wait for SDIO interrupt until timeout.

Parameters
- **handle** –Handle of the sdspi device
- **timeout_ticks** –Ticks to wait before timeout.

Returns
- ESP_OK on success

esp_err_t **sdspi_host_init_slot**(int slot, const *sdspi_slot_config_t* *slot_config)

Initialize SD SPI driver for the specific SPI controller.

Deprecated:

Use `sdspi_host_init_device` instead.

Note: This function is not thread safe

Note: The SDIO over sdspi needs an extra interrupt line. Call `gpio_install_isr_service()` before this function.

Parameters

- **slot** –SPI controller to use (SPI2_HOST or SPI3_HOST)
- **slot_config** –pointer to slot configuration structure

Returns

- ESP_OK on success
- ESP_ERR_INVALID_ARG if sdspi_init_slot has invalid arguments
- ESP_ERR_NO_MEM if memory can not be allocated
- other errors from the underlying spi_master and gpio drivers

Structures

struct **sdspi_device_config_t**

Extra configuration for SD SPI device.

Public Members

spi_host_device_t **host_id**

SPI host to use, SPIx_HOST (see spi_types.h).

gpio_num_t **gpio_cs**

GPIO number of CS signal.

gpio_num_t **gpio_cd**

GPIO number of card detect signal.

gpio_num_t **gpio_wp**

GPIO number of write protect signal.

gpio_num_t **gpio_int**

GPIO number of interrupt line (input) for SDIO card.

struct **sdspi_slot_config_t**

Extra configuration for SPI host.

Deprecated:

Use *sdspi_device_config_t* and corresponding `sdspi_host_init_device()` instead.

Public Members

gpio_num_t **gpio_cs**

GPIO number of CS signal.

gpio_num_t **gpio_cd**

GPIO number of card detect signal.

gpio_num_t **gpio_wp**

GPIO number of write protect signal.

gpio_num_t **gpio_int**

GPIO number of interrupt line (input) for SDIO card.

gpio_num_t **gpio_miso**

GPIO number of MISO signal.

gpio_num_t **gpio_mosi**

GPIO number of MOSI signal.

gpio_num_t **gpio_sck**

GPIO number of SCK signal.

int **dma_channel**

DMA channel to be used by SPI driver (1 or 2).

Macros

SDSPI_DEFAULT_HOST

SDSPI_DEFAULT_DMA

SDSPI_HOST_DEFAULT()

Default *sdmmc_host_t* structure initializer for SD over SPI driver.

Uses SPI mode and max frequency set to 20MHz

'slot' should be set to an sdspi device initialized by `sdspi_host_init_device()`.

SDSPI_SLOT_NO_CD

indicates that card detect line is not used

SDSPI_SLOT_NO_WP

indicates that write protect line is not used

SDSPI_SLOT_NO_INT

indicates that interrupt line is not used

SDSPI_DEVICE_CONFIG_DEFAULT()

Macro defining default configuration of SD SPI device.

SDSPI_SLOT_CONFIG_DEFAULT()

Macro defining default configuration of SPI host

Type Definitions

typedef int **sdspi_dev_handle_t**

Handle representing an SD SPI device.

2.3.15 SDIO Card Slave Driver

Overview

The ESP32 SDIO Card peripherals (Host, Slave) shares two sets of pins as below table. The first set is usually occupied by SPI0 bus which is responsible for the SPI flash holding the code to run. This means SDIO slave driver can only runs on the second set of pins while SDIO host is not using it.

The SDIO slave can run under 3 modes: SPI, 1-bit SD and 4-bit SD modes, which is detected automatically by the hardware. According to the SDIO specification, CMD and DAT0-3 lines should be pulled up no matter in 1-bit, 4-bit or SPI mode.

Connections

Pin Name	Corresponding pins in SPI mode	Slot1	Slot2
		GPIO Number	
CLK	SCLK	6	14
CMD	MOSI	11	15
DAT0	MISO	7	2
DAT1	Interrupt	8	4
DAT2	N.C. (pullup)	9	12
DAT3	#CS	10	13

- 1-bit SD mode: Connect CLK, CMD, DAT0, DAT1 pins and the ground.
- 4-bit SD mode: Connect all pins and the ground.
- SPI mode: Connect SCLK, MOSI, MISO, Interrupt, #CS pins and the ground.

Note: Please check if CMD and DATA lines D0-D3 of the card are properly pulled up by 10 KOhm resistors. This should be ensured even in 1-bit mode or SPI mode. Most official modules don't offer these pullups internally. If you are using official development boards, check *Overview of Compatibility* to see whether your development boards have such pullups.

Note: Most official modules have conflicts on strapping pins with the SDIO slave function. If you are using a ESP32 module with 3.3 V flash inside, you have to burn the EFUSE when you are developing on the module for the first time. See *Overview of Compatibility* to see how to make your modules compatible with the SDIO.

Here is a list for modules/kits with 3.3 V flash:

- Modules: ESP32-PICO-D4, ESP32-WROOM-32 series (including ESP32-SOLO-1), ESP32-WROVER-B and ESP32-WROVER-IB
- Kits: ESP32-PICO-KIT, ESP32-DevKitC (till v4), ESP32-WROVER-KIT (v4.1 (also known as ESP32-WROVER-KIT-VB), v2, v1 (also known as DevKitJ v1))

You can tell the version of your ESP23-WROVER-KIT version from the module on it: v4.1 are with ESP32-WROVER-B modules, v3 are with ESP32-WROVER modules, while v2 and v1 are with ESP32-WROOM-32 modules.

Refer to *SD Pull-up Requirements* for more technical details of the pullups.

The host initialize the slave into SD mode by first sending CMD0 with DAT3 pin high, or in SPI mode by sending CMD0 with CS pin (the same pin as DAT3) low.

After the initialization, the host can enable the 4-bit SD mode by writing CCCR register 0x07 by CMD52. All the bus detection process are handled by the slave peripheral.

The host has to communicate with the slave by an ESP-slave-specific protocol. The slave driver offers 3 services over Function 1 access by CMD52 and CMD53: (1) a sending FIFO and a receiving FIFO, (2) 52 8-bit R/W registers shared by host and slave, (3) 16 interrupt sources (8 from host to slave, and 8 from slave to host).

Terminology

The SDIO slave driver uses the following terms:

- Transfer: a transfer is always started by a command token from the host, and may contain a reply and several data blocks. ESP32 slave software is based on transfers.
- Sending: slave to host transfers.
- Receiving: host to slave transfers.

Note: Register names in *ESP32 Technical Reference Manual* > *SDIO Slave Controller* [PDF] are oriented from the point of view of the host, i.e. 'rx' registers refer to sending, while 'tx' registers refer to receiving. We're not using *tx* or *rx* in the driver to avoid ambiguities.

- FIFO: specific address in Function 1 that can be access by CMD53 to read/write large amount of data. The address is related to the length requested to read from/write to the slave in a single transfer: *requested length* = 0x1F800-address.
- Ownership: When the driver takes ownership of a buffer, it means the driver can randomly read/write the buffer (usually via DMA). The application should not read/write the buffer until the ownership is returned to the application. If the application reads from a buffer owned by a receiving driver, the data read can be random; if the application writes to a buffer owned by a sending driver, the data sent may be corrupted.
- Requested length: The length requested in one transfer determined by the FIFO address.
- Transfer length: The length requested in one transfer determined by the CMD53 byte/block count field.

Note: Requested length is different from the transfer length. ESP32 slave DMA base on the *requested length* rather than the *transfer length*. The *transfer length* should be no shorter than the *requested length*, and the rest part will be filled with 0 (sending) or discard (receiving).

- Receiving buffer size: The buffer size is pre-defined between the host and the slave before communication starts. Slave application has to set the buffer size during initialization by the `recv_buffer_size` member of `sdio_slave_config_t`.
- Interrupts: the esp32 slave support interrupts in two directions: from host to slave (called slave interrupts below) and from slave to host (called host interrupts below). See more in *Interrupts*.
- Registers: specific address in Function 1 access by CMD52 or CMD53.

Communication with ESP SDIO Slave The host should initialize the ESP32 SDIO slave according to the standard SDIO initialization process (Sector 3.1.2 of SDIO Simplified Specification), which is described briefly in *ESP SDIO Slave Initialization*.

Furthermore, there's an ESP32-specific upper-level communication protocol upon the CMD52/CMD53 to Func 1. Please refer to *ESP SDIO Slave Protocol*. There is also a component *ESP Serial Slave Link* for ESP32 master to communicate with ESP32 SDIO slave, see example peripherals/sdio when programming your host.

Interrupts There are interrupts from host to slave, and from slave to host to help communicating conveniently.

Slave Interrupts The host can interrupt the slave by writing any one bit in the register 0x08D. Once any bit of the register is set, an interrupt is raised and the SDIO slave driver calls the callback function defined in the `slave_intr_cb` member in the `sdio_slave_config_t` structure.

Note: The callback function is called in the ISR, do not use any delay, loop or spinlock in the callback.

There's another set of functions can be used. You can call `sdio_slave_wait_int` to wait for an interrupt within a certain time, or call `sdio_slave_clear_int` to clear interrupts from host. The callback function can work with the wait functions perfectly.

Host Interrupts The slave can interrupt the host by an interrupt line (at certain time) which is level sensitive. When the host see the interrupt line pulled down, it may read the slave interrupt status register, to see the interrupt source.

Host can clear interrupt bits, or choose to disable a interrupt source. The interrupt line will hold active until all the sources are cleared or disabled.

There are several dedicated interrupt sources as well as general purpose sources. see `sdio_slave_hostint_t` for more information.

Shared Registers There are 52 8-bit R/W shared registers to share information between host and slave. The slave can write or read the registers at any time by `sdio_slave_read_reg` and `sdio_slave_write_reg`. The host can access (R/W) the register by CMD52 or CMD53.

Receiving FIFO When the host is going to send the slave some packets, it has to check whether the slave is ready to receive by reading the buffer number of slave.

To allow the host sending data to the slave, the application has to load buffers to the slave driver by the following steps:

1. Register the buffer by calling `sdio_slave_recv_register_buf`, and get the handle of the registered buffer. The driver will allocate memory for the linked-list descriptor needed to link the buffer onto the hardware. The size of these buffers should equal to the Receiving buffer size.
2. Load buffers onto the driver by passing the buffer handle to `sdio_slave_recv_load_buf`.
3. Get the received data by calling `sdio_slave_recv` or `sdio_slave_recv_packet`. If non-blocking call is needed, set `wait=0`.
   The difference between two APIs is that, `sdio_slave_recv_packet` gives more information about packet, which can consist of several buffers. When `ESP_ERR_NOT_FINISHED` is returned by this API, you should call this API iteratively until the return value is `ESP_OK`. All the continuous buffers returned with `ESP_ERR_NOT_FINISHED`, together with the last buffer returned with `ESP_OK`, belong to one packet from the host. Call `sdio_slave_recv_get_buf` to get the address of the received data, and the actual length received in each buffer. The packet length is the sum of received length of all the buffers in the packet.
   If the host never send data longer than the Receiving buffer size, or you don't care about the packet boundary (e.g. the data is only a byte stream), you can call the simpler version `sdio_slave_recv` instead.
4. Pass the handle of processed buffer back to the driver by `sdio_recv_load_buf` again.

Note: To avoid overhead from copying data, the driver itself doesn't have any buffer inside, the application is responsible to offer new buffers in time. The DMA will automatically store received data to the buffer.

Sending FIFO Each time the slave has data to send, it raises an interrupt and the host will request for the packet length. There are two sending modes:

- Stream Mode: when a buffer is loaded to the driver, the buffer length will be counted into the packet length requested by host in the incoming communications. Regardless previous packets are sent or not. This means the host can get data of several buffers in one transfer.
- Packet Mode: the packet length is updated packet by packet, and only when previous packet is sent. This means that the host can only get data of one buffer in one transfer.

Note: To avoid overhead from copying data, the driver itself doesn't have any buffer inside. Namely, the DMA takes data directly from the buffer provided by the application. The application should not touch the buffer until the sending is finished.

The sending mode can be set in the `sending_mode` member of `sdio_slave_config_t`, and the buffer numbers can be set in the `send_queue_size`. All the buffers are restricted to be no larger than 4092 bytes. Though in the stream mode several buffers can be sent in one transfer, each buffer is still counted as one in the queue.

The application can call `sdio_slave_transmit` to send packets. In this case the function returns when the transfer is successfully done, so the queue is not fully used. When higher effeciency is required, the application can use the following functions instead:

1. Pass buffer information (address, length, as well as an `arg` indicating the buffer) to `sdio_slave_send_queue`. If non-blocking call is needed, set `wait=0`. If the `wait` is not `portMAX_DELAY` (wait until success), application has to check the result to know whether the data is put in to the queue or discard.
2. Call `sdio_slave_send_get_finished` to get and deal with a finished transfer. A buffer should be keep unmodified until returned from `sdio_slave_send_get_finished`. This means the buffer is actually sent to the host, rather than just staying in the queue.

There are several ways to use the `arg` in the queue parameter:

1. Directly point `arg` to a dynamic-allocated buffer, and use the `arg` to free it when transfer finished.
2. Wrap transfer informations in a transfer structure, and point `arg` to the structure. You can use the structure to do more things like:

```
typedef struct {
    uint8_t* buffer;
    size_t   size;
    int      id;
}sdio_transfer_t;

//and send as:
sdio_transfer_t trans = {
    .buffer = ADDRESS_TO_SEND,
    .size = 8,
    .id = 3,  //the 3rd transfer so far
};
sdio_slave_send_queue(trans.buffer, trans.size, &trans, portMAX_DELAY);

//... maybe more transfers are sent here

//and deal with finished transfer as:
sdio_transfer_t* arg = NULL;
sdio_slave_send_get_finished((void**)&arg, portMAX_DELAY);
ESP_LOGI("tag", "(%d) successfully send %d bytes of %p", arg->id, arg->size,␣
↪arg->buffer);
some_post_callback(arg); //do more things
```

3. Working with the receiving part of this driver, point `arg` to the receive buffer handle of this buffer. So that we can directly use the buffer to receive data when it's sent:

```
uint8_t buffer[256]={1,2,3,4,5,6,7,8};
sdio_slave_buf_handle_t handle = sdio_slave_recv_register_buf(buffer);
sdio_slave_send_queue(buffer, 8, handle, portMAX_DELAY);

//... maybe more transfers are sent here

//and load finished buffer to receive as
sdio_slave_buf_handle_t handle = NULL;
sdio_slave_send_get_finished((void**)&handle, portMAX_DELAY);
sdio_slave_recv_load_buf(handle);
```

More about this, see peripherals/sdio.

Application Example

Slave/master communication: peripherals/sdio.

API Reference

Header File

- components/hal/include/hal/sdio_slave_types.h

Enumerations

enum **sdio_slave_hostint_t**

Mask of interrupts sending to the host.

Values:

enumerator **SDIO_SLAVE_HOSTINT_BIT0**

General purpose interrupt bit 0.

enumerator **SDIO_SLAVE_HOSTINT_BIT1**

enumerator **SDIO_SLAVE_HOSTINT_BIT2**

enumerator **SDIO_SLAVE_HOSTINT_BIT3**

enumerator **SDIO_SLAVE_HOSTINT_BIT4**

enumerator **SDIO_SLAVE_HOSTINT_BIT5**

enumerator **SDIO_SLAVE_HOSTINT_BIT6**

enumerator **SDIO_SLAVE_HOSTINT_BIT7**

enumerator **SDIO_SLAVE_HOSTINT_SEND_NEW_PACKET**

New packet available.

enum **sdio_slave_timing_t**

Timing of SDIO slave.

Values:

enumerator **SDIO_SLAVE_TIMING_PSEND_PSAMPLE**

Send at posedge, and sample at posedge. Default value for HS mode. Normally there's no problem using this to work in DS mode.

enumerator **SDIO_SLAVE_TIMING_NSEND_PSAMPLE**

Send at negedge, and sample at posedge. Default value for DS mode and below.

enumerator **SDIO_SLAVE_TIMING_PSEND_NSAMPLE**

Send at posedge, and sample at negedge.

enumerator **SDIO_SLAVE_TIMING_NSEND_NSAMPLE**

Send at negedge, and sample at negedge.

enum **sdio_slave_sending_mode_t**

Configuration of SDIO slave mode.

Values:

enumerator **SDIO_SLAVE_SEND_STREAM**

Stream mode, all packets to send will be combined as one if possible.

enumerator **SDIO_SLAVE_SEND_PACKET**

Packet mode, one packets will be sent one after another (only increase packet_len if last packet sent).

Header File

- components/driver/include/driver/sdio_slave.h

Functions

esp_err_t **sdio_slave_initialize** (*sdio_slave_config_t* *config)

Initialize the sdio slave driver

Parameters **config** –Configuration of the sdio slave driver.
Returns
- ESP_ERR_NOT_FOUND if no free interrupt found.
- ESP_ERR_INVALID_STATE if already initialized.
- ESP_ERR_NO_MEM if fail due to memory allocation failed.
- ESP_OK if success

void **sdio_slave_deinit** (void)

De-initialize the sdio slave driver to release the resources.

esp_err_t **sdio_slave_start** (void)

Start hardware for sending and receiving, as well as set the IOREADY1 to 1.

Note: The driver will continue sending from previous data and PKT_LEN counting, keep data received as well as start receiving from current TOKEN1 counting. See `sdio_slave_reset`.

Returns
- ESP_ERR_INVALID_STATE if already started.
- ESP_OK otherwise.

void **sdio_slave_stop** (void)

Stop hardware from sending and receiving, also set IOREADY1 to 0.

Note: this will not clear the data already in the driver, and also not reset the PKT_LEN and TOKEN1 counting. Call `sdio_slave_reset` to do that.

esp_err_t **sdio_slave_reset** (void)

Clear the data still in the driver, as well as reset the PKT_LEN and TOKEN1 counting.

Returns always return ESP_OK.

sdio_slave_buf_handle_t **sdio_slave_recv_register_buf** (uint8_t *start)

Register buffer used for receiving. All buffers should be registered before used, and then can be used (again) in the driver by the handle returned.

Note: The driver will use and only use the amount of space specified in the `recv_buffer_size` member set in the *`sdio_slave_config_t`*. All buffers should be larger than that. The buffer is used by the DMA, so it should be DMA capable and 32-bit aligned.

Parameters **start** –The start address of the buffer.
Returns The buffer handle if success, otherwise NULL.

esp_err_t **sdio_slave_recv_unregister_buf**(*sdio_slave_buf_handle_t* handle)

Unregister buffer from driver, and free the space used by the descriptor pointing to the buffer.

Parameters **handle** –Handle to the buffer to release.

Returns ESP_OK if success, ESP_ERR_INVALID_ARG if the handle is NULL or the buffer is being used.

esp_err_t **sdio_slave_recv_load_buf**(*sdio_slave_buf_handle_t* handle)

Load buffer to the queue waiting to receive data. The driver takes ownership of the buffer until the buffer is returned by `sdio_slave_send_get_finished` after the transaction is finished.

Parameters **handle** –Handle to the buffer ready to receive data.

Returns

- ESP_ERR_INVALID_ARG if invalid handle or the buffer is already in the queue. Only after the buffer is returened by `sdio_slave_recv` can you load it again.
- ESP_OK if success

esp_err_t **sdio_slave_recv_packet**(*sdio_slave_buf_handle_t* *handle_ret, TickType_t wait)

Get buffer of received data if exist with packet information. The driver returns the ownership of the buffer to the app.

When you see return value is `ESP_ERR_NOT_FINISHED`, you should call this API iteratively until the return value is `ESP_OK`. All the continuous buffers returned with `ESP_ERR_NOT_FINISHED`, together with the last buffer returned with `ESP_OK`, belong to one packet from the host.

You can call simpler `sdio_slave_recv` instead, if the host never send data longer than the Receiving buffer size, or you don't care about the packet boundary (e.g. the data is only a byte stream).

Note: Call `sdio_slave_load_buf` with the handle to re-load the buffer onto the link list, and receive with the same buffer again. The address and length of the buffer got here is the same as got from `sdio_slave_get_buffer`.

Parameters

- **handle_ret** –Handle of the buffer holding received data. Use this handle in `sdio_slave_recv_load_buf()` to receive in the same buffer again.
- **wait** –Time to wait before data received.

Returns

- ESP_ERR_INVALID_ARG if handle_ret is NULL
- ESP_ERR_TIMEOUT if timeout before receiving new data
- ESP_ERR_NOT_FINISHED if returned buffer is not the end of a packet from the host, should call this API again until the end of a packet
- ESP_OK if success

esp_err_t **sdio_slave_recv**(*sdio_slave_buf_handle_t* *handle_ret, uint8_t **out_addr, size_t *out_len, TickType_t wait)

Get received data if exist. The driver returns the ownership of the buffer to the app.

Note: Call `sdio_slave_load_buf` with the handle to re-load the buffer onto the link list, and receive with the same buffer again. The address and length of the buffer got here is the same as got from `sdio_slave_get_buffer`.

Parameters

- **handle_ret** –Handle to the buffer holding received data. Use this handle in `sdio_slave_recv_load_buf` to receive in the same buffer again.
- **out_addr** –**[out]** Output of the start address, set to NULL if not needed.
- **out_len** –**[out]** Actual length of the data in the buffer, set to NULL if not needed.
- **wait** –Time to wait before data received.

Returns
- ESP_ERR_INVALID_ARG if handle_ret is NULL
- ESP_ERR_TIMEOUT if timeout before receiving new data
- ESP_OK if success

uint8_t ***sdio_slave_recv_get_buf**(*sdio_slave_buf_handle_t* handle, size_t *len_o)

Retrieve the buffer corresponding to a handle.

Parameters
- **handle** –Handle to get the buffer.
- **len_o** –Output of buffer length

Returns buffer address if success, otherwise NULL.

esp_err_t **sdio_slave_send_queue**(uint8_t *addr, size_t len, void *arg, TickType_t wait)

Put a new sending transfer into the send queue. The driver takes ownership of the buffer until the buffer is returned by `sdio_slave_send_get_finished` after the transaction is finished.

Parameters
- **addr** –Address for data to be sent. The buffer should be DMA capable and 32-bit aligned.
- **len** –Length of the data, should not be longer than 4092 bytes (may support longer in the future).
- **arg** –Argument to returned in `sdio_slave_send_get_finished`. The argument can be used to indicate which transaction is done, or as a parameter for a callback. Set to NULL if not needed.
- **wait** –Time to wait if the buffer is full.

Returns
- ESP_ERR_INVALID_ARG if the length is not greater than 0.
- ESP_ERR_TIMEOUT if the queue is still full until timeout.
- ESP_OK if success.

esp_err_t **sdio_slave_send_get_finished**(void **out_arg, TickType_t wait)

Return the ownership of a finished transaction.

Parameters
- **out_arg** –Argument of the finished transaction. Set to NULL if unused.
- **wait** –Time to wait if there’ s no finished sending transaction.

Returns ESP_ERR_TIMEOUT if no transaction finished, or ESP_OK if succeed.

esp_err_t **sdio_slave_transmit**(uint8_t *addr, size_t len)

Start a new sending transfer, and wait for it (blocked) to be finished.

Parameters
- **addr** –Start address of the buffer to send
- **len** –Length of buffer to send.

Returns
- ESP_ERR_INVALID_ARG if the length of descriptor is not greater than 0.
- ESP_ERR_TIMEOUT if the queue is full or host do not start a transfer before timeout.
- ESP_OK if success.

uint8_t **sdio_slave_read_reg**(int pos)

Read the spi slave register shared with host.

Note: register 28 to 31 are reserved for interrupt vector.

Parameters **pos** –register address, 0-27 or 32-63.
Returns value of the register.

esp_err_t **sdio_slave_write_reg**(int pos, uint8_t reg)

Write the spi slave register shared with host.

Note: register 29 and 31 are used for interrupt vector.

Parameters

- **pos** –register address, 0-11, 14-15, 18-19, 24-27 and 32-63, other address are reserved.
- **reg** –the value to write.

Returns ESP_ERR_INVALID_ARG if address wrong, otherwise ESP_OK.

sdio_slave_hostint_t **sdio_slave_get_host_intena**(void)

Get the interrupt enable for host.

Returns the interrupt mask.

void **sdio_slave_set_host_intena**(*sdio_slave_hostint_t* mask)

Set the interrupt enable for host.

Parameters **mask** –Enable mask for host interrupt.

esp_err_t **sdio_slave_send_host_int**(uint8_t pos)

Interrupt the host by general purpose interrupt.

Parameters **pos** –Interrupt num, 0-7.

Returns

- ESP_ERR_INVALID_ARG if interrupt num error
- ESP_OK otherwise

void **sdio_slave_clear_host_int**(*sdio_slave_hostint_t* mask)

Clear general purpose interrupt to host.

Parameters **mask** –Interrupt bits to clear, by bit mask.

esp_err_t **sdio_slave_wait_int**(int pos, TickType_t wait)

Wait for general purpose interrupt from host.

Note: this clears the interrupt at the same time.

Parameters

- **pos** –Interrupt source number to wait for. is set.
- **wait** –Time to wait before interrupt triggered.

Returns ESP_OK if success, ESP_ERR_TIMEOUT if timeout.

Structures

struct **sdio_slave_config_t**

Configuration of SDIO slave.

Public Members

sdio_slave_timing_t **timing**

timing of sdio_slave. see `sdio_slave_timing_t`.

sdio_slave_sending_mode_t **sending_mode**

mode of sdio_slave. `SDIO_SLAVE_MODE_STREAM` if the data needs to be sent as much as possible; `SDIO_SLAVE_MODE_PACKET` if the data should be sent in packets.

int **send_queue_size**

max buffers that can be queued before sending.

size_t **recv_buffer_size**

If buffer_size is too small, it costs more CPU time to handle larger number of buffers. If buffer_size is too large, the space larger than the transaction length is left blank but still counts a buffer, and the buffers are easily run out. Should be set according to length of data really transferred. All data that do not fully fill a buffer is still counted as one buffer. E.g. 10 bytes data costs 2 buffers if the size is 8 bytes per buffer. Buffer size of the slave pre-defined between host and slave before communication. All receive buffer given to the driver should be larger than this.

sdio_event_cb_t **event_cb**

when the host interrupts slave, this callback will be called with interrupt number (0-7).

uint32_t **flags**

Features to be enabled for the slave, combinations of `SDIO_SLAVE_FLAG_*`.

Macros

SDIO_SLAVE_RECV_MAX_BUFFER

SDIO_SLAVE_FLAG_DAT2_DISABLED

It is required by the SD specification that all 4 data lines should be used and pulled up even in 1-bit mode or SPI mode. However, as a feature, the user can specify this flag to make use of DAT2 pin in 1-bit mode. Note that the host cannot read CCCR registers to know we don't support 4-bit mode anymore, please do this at your own risk.

SDIO_SLAVE_FLAG_HOST_INTR_DISABLED

The DAT1 line is used as the interrupt line in SDIO protocol. However, as a feature, the user can specify this flag to make use of DAT1 pin of the slave in 1-bit mode. Note that the host has to do polling to the interrupt registers to know whether there are interrupts from the slave. And it cannot read CCCR registers to know we don't support 4-bit mode anymore, please do this at your own risk.

SDIO_SLAVE_FLAG_INTERNAL_PULLUP

Enable internal pullups for enabled pins. It is required by the SD specification that all the 4 data lines should be pulled up even in 1-bit mode or SPI mode. Note that the internal pull-ups are not sufficient for stable communication, please do connect external pull-ups on the bus. This is only for example and debug use.

Type Definitions

typedef void (***sdio_event_cb_t**)(uint8_t event)

typedef void ***sdio_slave_buf_handle_t**

Handle of a receive buffer, register a handle by calling `sdio_slave_recv_register_buf`. Use the handle to load the buffer to the driver, or call `sdio_slave_recv_unregister_buf` if it is no longer used.

2.3.16 Sigma-delta Modulation

Introduction

ESP32 has a second-order sigma-delta modulation module. This driver configures the channels of the sigma-delta module.

Functionality Overview

There are 8 independent sigma-delta modulation channels identified with *sigmadelta_channel_t*. Each channel is capable to output the binary, hardware generated signal with the sigma-delta modulation.

Selected channel should be set up by providing configuration parameters in *sigmadelta_config_t* and then applying this configuration with *sigmadelta_config()*.

Another option is to call individual functions, that will configure all required parameters one by one:

- **Prescaler** of the sigma-delta generator - *sigmadelta_set_prescale()*
- **Duty** of the output signal - *sigmadelta_set_duty()*
- **GPIO pin** to output modulated signal - *sigmadelta_set_pin()*

The range of the 'duty' input parameter of *sigmadelta_set_duty()* is from -128 to 127 (eight bit signed integer). If zero value is set, then the output signal's duty will be about 50%, see description of *sigmadelta_set_duty()*.

Convert to analog signal (Optional)

Typically, if the sigma-delta signal is connected to an LED, you don't have to add any filter between them (because our eyes are a low pass filter naturally). However, if you want to check the real voltage or watch the analog waveform, you need to design an analog low pass filter. Also, it is recommended to use an active filter instead of a passive filter to gain better isolation and not lose too much voltage.

For example, you can take the following Sallen-Key topology Low Pass Filter as a reference.

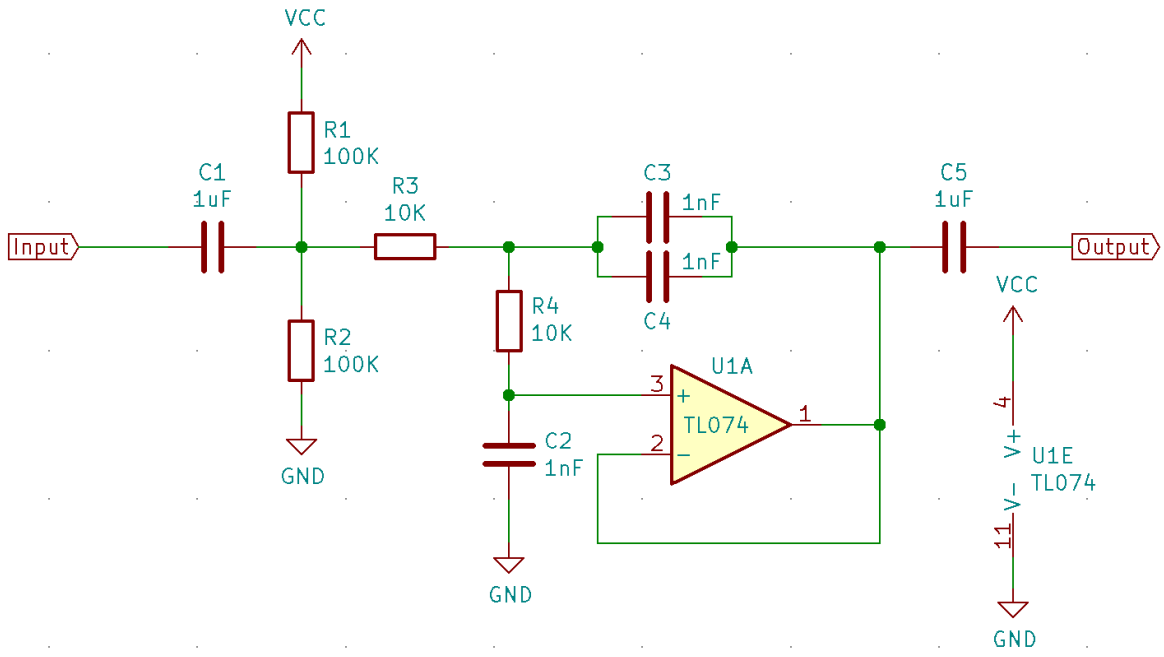

Fig. 19: Sallen-Key Low Pass Filter

Application Example

Sigma-delta Modulation example: peripherals/sigmadelta.

API Reference

Header File

- components/driver/include/driver/sigmadelta.h

Functions

esp_err_t **sigmadelta_config**(const *sigmadelta_config_t* *config)

Configure Sigma-delta channel.

Parameters **config** –Pointer of Sigma-delta channel configuration struct

Returns

- ESP_OK Success
- ESP_ERR_INVALID_STATE sigmadelta driver already initialized
- ESP_ERR_INVALID_ARG Parameter error

esp_err_t **sigmadelta_set_duty**(*sigmadelta_channel_t* channel, int8_t duty)

Set Sigma-delta channel duty.

This function is used to set Sigma-delta channel duty, If you add a capacitor between the output pin and ground, the average output voltage will be Vdc = VDDIO / 256 * duty + VDDIO/2, where VDDIO is the power supply voltage.

Parameters

- **channel** –Sigma-delta channel number
- **duty** –Sigma-delta duty of one channel, the value ranges from -128 to 127, recommended range is -90 ~ 90. The waveform is more like a random one in this range.

Returns

- ESP_OK Success
- ESP_ERR_INVALID_STATE sigmadelta driver has not been initialized
- ESP_ERR_INVALID_ARG Parameter error

esp_err_t **sigmadelta_set_prescale**(*sigmadelta_channel_t* channel, uint8_t prescale)

Set Sigma-delta channel' s clock pre-scale value. The source clock is APP_CLK, 80MHz. The clock frequency of the sigma-delta channel is APP_CLK / pre_scale.

Parameters

- **channel** –Sigma-delta channel number
- **prescale** –The divider of source clock, ranges from 0 to 255

Returns

- ESP_OK Success
- ESP_ERR_INVALID_STATE sigmadelta driver has not been initialized
- ESP_ERR_INVALID_ARG Parameter error

esp_err_t **sigmadelta_set_pin**(*sigmadelta_channel_t* channel, *gpio_num_t* gpio_num)

Set Sigma-delta signal output pin.

Parameters

- **channel** –Sigma-delta channel number
- **gpio_num** –GPIO number of output pin.

Returns

- ESP_OK Success
- ESP_ERR_INVALID_STATE sigmadelta driver has not been initialized
- ESP_ERR_INVALID_ARG Parameter error

Header File

- components/hal/include/hal/sigmadelta_types.h

Structures

struct **sigmadelta_config_t**

Sigma-delta configure struct.

Public Members

sigmadelta_channel_t **channel**

Sigma-delta channel number

int8_t **sigmadelta_duty**

Sigma-delta duty, duty ranges from -128 to 127.

uint8_t **sigmadelta_prescale**

Sigma-delta prescale, prescale ranges from 0 to 255.

uint8_t **sigmadelta_gpio**

Sigma-delta output io number, refer to gpio.h for more details.

Enumerations

enum **sigmadelta_port_t**

SIGMADELTA port number, the max port number is (SIGMADELTA_NUM_MAX -1).

Values:

enumerator **SIGMADELTA_PORT_0**

SIGMADELTA port 0

enumerator **SIGMADELTA_PORT_MAX**

SIGMADELTA port max

enum **sigmadelta_channel_t**

Sigma-delta channel list.

Values:

enumerator **SIGMADELTA_CHANNEL_0**

Sigma-delta channel 0

enumerator **SIGMADELTA_CHANNEL_1**

Sigma-delta channel 1

enumerator **SIGMADELTA_CHANNEL_2**

Sigma-delta channel 2

enumerator **SIGMADELTA_CHANNEL_3**

Sigma-delta channel 3

enumerator **SIGMADELTA_CHANNEL_4**

Sigma-delta channel 4

enumerator **SIGMADELTA_CHANNEL_5**

Sigma-delta channel 5

enumerator **SIGMADELTA_CHANNEL_6**

Sigma-delta channel 6

enumerator **SIGMADELTA_CHANNEL_7**

Sigma-delta channel 7

enumerator **SIGMADELTA_CHANNEL_MAX**

Sigma-delta channel max

2.3.17 SPI Master Driver

SPI Master driver is a program that controls ESP32's SPI peripherals while they function as masters.

Overview of ESP32's SPI peripherals

ESP32 integrates 4 SPI peripherals.

- SPI0 and SPI1 are used internally to access the ESP32's attached flash memory. Both controllers share the same SPI bus signals, and there is an arbiter to determine which can access the bus.
  There are quite a few limitations when using SPI Master driver on the SPI1 bus, see *Notes on Using the SPI Master driver on SPI1 Bus*.
- SPI2 and SPI3 are general purpose SPI controllers, sometimes referred to as HSPI and VSPI, respectively. They are open to users. SPI2 and SPI3 have independent bus signals with the same respective names. Each bus has three CS lines to drive up to same number of SPI slaves.

Terminology

The terms used in relation to the SPI master driver are given in the table below.

Term	Definition
Host	The SPI controller peripheral inside ESP32 that initiates SPI transmissions over the bus, and acts as an SPI Master.
Device	SPI slave device. An SPI bus may be connected to one or more Devices. Each Device shares the MOSI, MISO and SCLK signals but is only active on the bus when the Host asserts the Device's individual CS line.
Bus	A signal bus, common to all Devices connected to one Host. In general, a bus includes the following lines: MISO, MOSI, SCLK, one or more CS lines, and, optionally, QUADWP and QUADHD. So Devices are connected to the same lines, with the exception that each Device has its own CS line. Several Devices can also share one CS line if connected in the daisy-chain manner.
MOSI	Master Out, Slave In, a.k.a. D. Data transmission from a Host to Device. Also data0 signal in Octal/OPI mode.
MISO	Master In, Slave Out, a.k.a. Q. Data transmission from a Device to Host. Also data1 signal in Octal/OPI mode.
SCLK	Serial Clock. Oscillating signal generated by a Host that keeps the transmission of data bits in sync.
CS	Chip Select. Allows a Host to select individual Device(s) connected to the bus in order to send or receive data.
QUADWP	Write Protect signal. Used for 4-bit (qio/qout) transactions. Also for data2 signal in Octal/OPI mode.
QUADHD	Hold signal. Used for 4-bit (qio/qout) transactions. Also for data3 signal in Octal/OPI mode.
DATA4	Data4 signal in Octal/OPI mode.
DATA5	Data5 signal in Octal/OPI mode.
DATA6	Data6 signal in Octal/OPI mode.
DATA7	Data7 signal in Octal/OPI mode.
Assertion	The action of activating a line.
Deassertion	The action of returning the line back to inactive (back to idle) status.
Transaction	One instance of a Host asserting a CS line, transferring data to and from a Device, and de-asserting the CS line. Transactions are atomic, which means they can never be interrupted by another transaction.
Launch edge	Edge of the clock at which the source register *launches* the signal onto the line.
Latch edge	Edge of the clock at which the destination register *latches in* the signal.

Driver Features

The SPI master driver governs communications of Hosts with Devices. The driver supports the following features:

- Multi-threaded environments
- Transparent handling of DMA transfers while reading and writing data
- Automatic time-division multiplexing of data coming from different Devices on the same signal bus, see *SPI Bus Lock*.

Warning: The SPI master driver has the concept of multiple Devices connected to a single bus (sharing a single ESP32 SPI peripheral). As long as each Device is accessed by only one task, the driver is thread safe. However, if multiple tasks try to access the same SPI Device, the driver is **not thread-safe**. In this case, it is recommended to either:

- Refactor your application so that each SPI peripheral is only accessed by a single task at a time.
- Add a mutex lock around the shared Device using `xSemaphoreCreateMutex`.

SPI Features

SPI Master

SPI Bus Lock To realize the multiplexing of different devices from different drivers (SPI Master, SPI Flash, etc.), an SPI bus lock is applied on each SPI bus. Drivers can attach their devices onto the bus with the arbitration of the lock.

Each bus lock are initialized with a BG (background) service registered, all devices request to do transactions on the bus should wait until the BG to be successfully disabled.

- For SPI1 bus, the BG is the cache, the bus lock will help to disable the cache before device operations starts, and enable it again after device releasing the lock. No devices on SPI1 is allowed using ISR (it's meaningless for the task to yield to other tasks when the cache is disabled).
  There are quite a few limitations when using SPI Master driver on the SPI1 bus, see *Notes on Using the SPI Master driver on SPI1 Bus*.
- For other buses, the driver may register its ISR as the BG. The bus lock will block a device task when it requests for exclusive use of the bus, try to disable the ISR, and unblock the device task allowed to exclusively use the bus when the ISR is successfully disabled. When the task releases the lock, the lock will also try to resume the ISR if there are pending transactions to be done in the ISR.

SPI Transactions

An SPI bus transaction consists of five phases which can be found in the table below. Any of these phases can be skipped.

Phase	Description
Command	In this phase, a command (0-16 bit) is written to the bus by the Host.
Address	In this phase, an address (0-64 bit) is transmitted over the bus by the Host.
Write	Host sends data to a Device. This data follows the optional command and address phases and is indistinguishable from them at the electrical level.
Dummy	This phase is configurable and is used to meet the timing requirements.
Read	Device sends data to its Host.

The attributes of a transaction are determined by the bus configuration structure `spi_bus_config_t`, device configuration structure `spi_device_interface_config_t`, and transaction configuration structure `spi_transaction_t`.

An SPI Host can send full-duplex transactions, during which the read and write phases occur simultaneously. The total transaction length is determined by the sum of the following members:

- `spi_device_interface_config_t::command_bits`
- `spi_device_interface_config_t::address_bits`
- `spi_transaction_t::length`

While the member `spi_transaction_t::rxlength` only determines the length of data received into the buffer.

In half-duplex transactions, the read and write phases are not simultaneous (one direction at a time). The lengths of the write and read phases are determined by `length` and `rxlength` members of the struct `spi_transaction_t` respectively.

The command and address phases are optional, as not every SPI device requires a command and/or address. This is reflected in the Device's configuration: if `command_bits` and/or `address_bits` are set to zero, no command or address phase will occur.

The read and write phases can also be optional, as not every transaction requires both writing and reading data. If `rx_buffer` is NULL and `SPI_TRANS_USE_RXDATA` is not set, the read phase is skipped. If `tx_buffer` is NULL and `SPI_TRANS_USE_TXDATA` is not set, the write phase is skipped.

The driver supports two types of transactions: the interrupt transactions and polling transactions. The programmer can choose to use a different transaction type per Device. If your Device requires both transaction types, see *Notes on Sending Mixed Transactions to the Same Device*.

Interrupt Transactions Interrupt transactions will block the transaction routine until the transaction completes, thus allowing the CPU to run other tasks.

An application task can queue multiple transactions, and the driver will automatically handle them one-by-one in the interrupt service routine (ISR). It allows the task to switch to other procedures until all the transactions complete.

Polling Transactions Polling transactions do not use interrupts. The routine keeps polling the SPI Host' s status bit until the transaction is finished.

All the tasks that use interrupt transactions can be blocked by the queue. At this point, they will need to wait for the ISR to run twice before the transaction is finished. Polling transactions save time otherwise spent on queue handling and context switching, which results in smaller transaction duration. The disadvantage is that the CPU is busy while these transactions are in progress.

The `spi_device_polling_end()` routine needs an overhead of at least 1 us to unblock other tasks when the transaction is finished. It is strongly recommended to wrap a series of polling transactions using the functions `spi_device_acquire_bus()` and `spi_device_release_bus()` to avoid the overhead. For more information, see *Bus Acquiring*.

Transaction Line Mode Supported line modes for ESP32 are listed as follows, to make use of these modes, set the member *flags* in the struct `spi_transaction_t` as shown in the *Transaction Flag* column. If you want to check if corresponding IO pins are set or not, set the member *flags* in the `spi_bus_config_t` as shown in the *Bus IO setting Flag* column.

Mode name	Command Line Width	Address Line Width	Data Line Width	Transaction Flag	Bus IO setting Flag
Normal SPI	1	1	1	0	0
Dual Output	1	1	2	SPI_TRANS_MODE_DIO	SPICOMMON_BUSFLAG_DUAL
Dual I/O	1	2	2	SPI_TRANS_MODE_DIO | SPI_TRANS_MULTILINE_ADDR	
Quad Output	1	1	4	SPI_TRANS_MODE_QIO	SPICOMMON_BUSFLAG_QUAD
Quad I/O	1	4	4	SPI_TRANS_MODE_QIO | SPI_TRANS_MULTILINE_ADDR	

Command and Address Phases During the command and address phases, the members `cmd` and `addr` in the struct `spi_transaction_t` are sent to the bus, nothing is read at this time. The default lengths of the command and address phases are set in `spi_device_interface_config_t` by calling `spi_bus_add_device()`. If the flags `SPI_TRANS_VARIABLE_CMD` and `SPI_TRANS_VARIABLE_ADDR` in the member `spi_transaction_t::flags` are not set, the driver automatically sets the length of these phases to default values during Device initialization.

If the lengths of the command and address phases need to be variable, declare the struct `spi_transaction_ext_t`, set the flags `SPI_TRANS_VARIABLE_CMD` and/or `SPI_TRANS_VARIABLE_ADDR` in the member `spi_transaction_ext_t::base` and configure the rest of base as usual. Then the length of each phase will be equal to `command_bits` and `address_bits` set in the struct `spi_transaction_ext_t`.

If the command and address phase need to be as the same number of lines as data phase, you need to set *SPI_TRANS_MULTILINE_CMD* and/or *SPI_TRANS_MULTILINE_ADDR* to the *flags* member in the struct `spi_transaction_t`. Also see *Transaction Line Mode*.

Write and Read Phases Normally, the data that needs to be transferred to or from a Device will be read from or written to a chunk of memory indicated by the members `rx_buffer` and `tx_buffer` of the structure `spi_transaction_t`. If DMA is enabled for transfers, the buffers are required to be:

1. Allocated in DMA-capable internal memory. If *external PSRAM is enabled*, this means using `pvPortMallocCaps(size, MALLOC_CAP_DMA)`.
2. 32-bit aligned (staring from a 32-bit boundary and having a length of multiples of 4 bytes).

If these requirements are not satisfied, the transaction efficiency will be affected due to the allocation and copying of temporary buffers.

If using more than one data lines to transmit, please set *SPI_DEVICE_HALFDUPLEX* flag for the member *flags* in the struct `spi_device_interface_config_t`. And the member *flags* in the struct `spi_transaction_t` should be set as described in *Transaction Line Mode*.

Note: Half-duplex transactions with both read and write phases are not supported when using DMA. For details and workarounds, see *Known Issues*.

Bus Acquiring Sometimes you might want to send SPI transactions exclusively and continuously so that it takes as little time as possible. For this, you can use bus acquiring, which helps to suspend transactions (both polling or interrupt) to other devices until the bus is released. To acquire and release a bus, use the functions `spi_device_acquire_bus()` and `spi_device_release_bus()`.

Driver Usage

- Initialize an SPI bus by calling the function `spi_bus_initialize()`. Make sure to set the correct I/O pins in the struct `spi_bus_config_t`. Set the signals that are not needed to `-1`.
- Register a Device connected to the bus with the driver by calling the function `spi_bus_add_device()`. Make sure to configure any timing requirements the device might need with the parameter `dev_config`. You should now have obtained the Device's handle which will be used when sending a transaction to it.
- To interact with the Device, fill one or more `spi_transaction_t` structs with any transaction parameters required. Then send the structs either using a polling transaction or an interrupt transaction:
  - ***Interrupt*** Either queue all transactions by calling the function `spi_device_queue_trans()` and, at a later time, query the result using the function `spi_device_get_trans_result()`, or handle all requests synchronously by feeding them into `spi_device_transmit()`.
  - ***Polling*** Call the function `spi_device_polling_transmit()` to send polling transactions. Alternatively, if you want to insert something in between, send the transactions by using `spi_device_polling_start()` and `spi_device_polling_end()`.
- (Optional) To perform back-to-back transactions with a Device, call the function `spi_device_acquire_bus()` before sending transactions and `spi_device_release_bus()` after the transactions have been sent.
- (Optional) To unload the driver for a certain Device, call `spi_bus_remove_device()` with the Device handle as an argument.
- (Optional) To remove the driver for a bus, make sure no more drivers are attached and call `spi_bus_free()`.

The example code for the SPI master driver can be found in the peripherals/spi_master directory of ESP-IDF examples.

Transactions with Data Not Exceeding 32 Bits When the transaction data size is equal to or less than 32 bits, it will be sub-optimal to allocate a buffer for the data. The data can be directly stored in the transaction struct instead. For transmitted data, it can be achieved by using the `tx_data` member and setting the `SPI_TRANS_USE_TXDATA`

flag on the transmission. For received data, use `rx_data` and set `SPI_TRANS_USE_RXDATA`. In both cases, do not touch the `tx_buffer` or `rx_buffer` members, because they use the same memory locations as `tx_data` and `rx_data`.

Transactions with Integers Other Than `uint8_t` An SPI Host reads and writes data into memory byte by byte. By default, data is sent with the most significant bit (MSB) first, as LSB first used in rare cases. If a value less than 8 bits needs to be sent, the bits should be written into memory in the MSB first manner.

For example, if `0b00010` needs to be sent, it should be written into a `uint8_t` variable, and the length for reading should be set to 5 bits. The Device will still receive 8 bits with 3 additional "random" bits, so the reading must be performed correctly.

On top of that, ESP32 is a little-endian chip, which means that the least significant byte of `uint16_t` and `uint32_t` variables is stored at the smallest address. Hence, if `uint16_t` is stored in memory, bits [7:0] are sent first, followed by bits [15:8].

For cases when the data to be transmitted has the size differing from `uint8_t` arrays, the following macros can be used to transform data to the format that can be sent by the SPI driver directly:

- *`SPI_SWAP_DATA_TX`* for data to be transmitted
- *`SPI_SWAP_DATA_RX`* for data received

Notes on Sending Mixed Transactions to the Same Device To reduce coding complexity, send only one type of transactions (interrupt or polling) to one Device. However, you still can send both interrupt and polling transactions alternately. The notes below explain how to do this.

The polling transactions should be initiated only after all the polling and interrupt transactions are finished.

Since an unfinished polling transaction blocks other transactions, please do not forget to call the function *`spi_device_polling_end()`* after *`spi_device_polling_start()`* to allow other transactions or to allow other Devices to use the bus. Remember that if there is no need to switch to other tasks during your polling transaction, you can initiate a transaction with *`spi_device_polling_transmit()`* so that it will be ended automatically.

In-flight polling transactions are disturbed by the ISR operation to accommodate interrupt transactions. Always make sure that all the interrupt transactions sent to the ISR are finished before you call *`spi_device_polling_start()`*. To do that, you can keep calling *`spi_device_get_trans_result()`* until all the transactions are returned.

To have better control of the calling sequence of functions, send mixed transactions to the same Device only within a single task.

Notes on Using the SPI Master driver on SPI1 Bus

Note: Though the *SPI Bus Lock* feature makes it possible to use SPI Master driver on the SPI1 bus, it's still tricky and needs a lot of special treatment. It's a feature for advanced developers.

To use SPI Master driver on SPI1 bus, you have to take care of two problems:

1. The code and data, required at the meanwhile the driver is operating SPI1 bus, should be in the internal memory. SPI1 bus is shared among devices and the cache for data (code) in the Flash as well as the PSRAM. The cache should be disabled during the other drivers are operating the SPI1 bus. Hence the data (code) in the flash as well as the PSRAM cannot be fetched at the meanwhile the driver acquires the SPI1 bus by:
   - Explicit bus acquiring between *`spi_device_acquire_bus()`* and *`spi_device_release_bus()`*.
   - Implicit bus acquiring between *`spi_device_polling_start()`* and *`spi_device_polling_end()`* (or inside *`spi_device_polling_transmit()`*).

   During the time above, all other tasks and most ISRs will be disabled (see *IRAM-Safe Interrupt Handlers*). Application code and data used by current task should be placed in internal memory (DRAM or IRAM), or already in the ROM. Access to external memory (flash code, const data in the flash, and static/heap data in the

PSRAM) will cause a *Cache disabled but cached memory region accessed* exception. For differences between IRAM, DRAM, and flash cache, please refer to the *application memory layout* documentation.
To place functions into the IRAM, you can either:

1. Add *IRAM_ATTR* (include "esp_attr.h") to the function like:
   IRAM_ATTR void foo(void) { }
   Please note that when a function is inlined, it will follow its caller's segment, and the attribute will not take effect. You may need to use *NOLINE_ATTR* to avoid this.
2. Use the *noflash* placement in the *linker.lf*. See more in *Linker Script Generation*. Please note that, some code may be transformed into lookup table in the const data by the compiler, so *noflash_text* is not safe.

Please do take care that the optimization level may affect the compiler behavior of inline, or transforming some code into lookup table in the const data, etc.
To place data into the DRAM, you can either:

1. Add *DRAM_ATTR* (include "esp_attr.h") to the data definition like:
   DRAM_ATTR int g_foo = 3;
2. Use the *noflash* placement in the linker.lf. See more in *Linker Script Generation*.

Please also see the example peripherals/spi_master/hd_eeprom.

GPIO Matrix and IO_MUX Most of ESP32's peripheral signals have direct connection to their dedicated IO_MUX pins. However, the signals can also be routed to any other available pins using the less direct GPIO matrix. If at least one signal is routed through the GPIO matrix, then all signals will be routed through it.

The GPIO matrix introduces flexibility of routing but also brings the following disadvantages:

- Increases the input delay of the MISO signal, which makes MISO setup time violations more likely. If SPI needs to operate at high speeds, use dedicated IO_MUX pins.
- Allows signals with clock frequencies only up to 40 MHz, as opposed to 80 MHz if IO_MUX pins are used.

Note: For more details about the influence of the MISO input delay on the maximum clock frequency, see *Timing Considerations*.

The IO_MUX pins for SPI buses are given below.

Pin Name	SPI2	SPI3
	GPIO Number	
CS0*	15	5
SCLK	14	18
MISO	12	19
MOSI	13	23
QUADWP	2	22
QUADHD	4	21

- Only the first Device attached to the bus can use the CS0 pin.

Transfer Speed Considerations

There are three factors limiting the transfer speed:

- Transaction interval
- SPI clock frequency
- Cache miss of SPI functions, including callbacks

The main parameter that determines the transfer speed for large transactions is clock frequency. For multiple small transactions, the transfer speed is mostly determined by the length of transaction intervals.

Transaction Duration Transaction duration includes setting up SPI peripheral registers, copying data to FIFOs or setting up DMA links, and the time for SPI transaction.

Interrupt transactions allow appending extra overhead to accommodate the cost of FreeRTOS queues and the time needed for switching between tasks and the ISR.

For **interrupt transactions**, the CPU can switch to other tasks when a transaction is in progress. This saves the CPU time but increases the transaction duration. See *Interrupt Transactions*. For **polling transactions**, it does not block the task but allows to do polling when the transaction is in progress. For more information, see *Polling Transactions*.

If DMA is enabled, setting up the linked list requires about 2 us per transaction. When a master is transferring data, it automatically reads the data from the linked list. If DMA is not enabled, the CPU has to write and read each byte from the FIFO by itself. Usually, this is faster than 2 us, but the transaction length is limited to 64 bytes for both write and read.

Typical transaction duration for one byte of data are given below.

- Interrupt Transaction via DMA: 28 µs.
- Interrupt Transaction via CPU: 25 µs.
- Polling Transaction via DMA: 10 µs.
- Polling Transaction via CPU: 8 µs.

SPI Clock Frequency Transferring each byte takes eight times the clock period *8/fspi*.

If the clock frequency is too high, the use of some functions might be limited. See *Timing Considerations*.

Cache Miss The default config puts only the ISR into the IRAM. Other SPI related functions, including the driver itself and the callback, might suffer from cache misses and will need to wait until the code is read from flash. Select *CONFIG_SPI_MASTER_IN_IRAM* to put the whole SPI driver into IRAM and put the entire callback(s) and its callee functions into IRAM to prevent cache misses.

For an interrupt transaction, the overall cost is *20+8n/Fspi[MHz]* [us] for n bytes transferred in one transaction. Hence, the transferring speed is: *n/(20+8n/Fspi)*. An example of transferring speed at 8 MHz clock speed is given in the following table.

Frequency (MHz)	Transaction Interval (us)	Transaction Length (bytes)	Total Time (us)	Total Speed (KBps)
8	25	1	26	38.5
8	25	8	33	242.4
8	25	16	41	490.2
8	25	64	89	719.1
8	25	128	153	836.6

When a transaction length is short, the cost of transaction interval is high. If possible, try to squash several short transactions into one transaction to achieve a higher transfer speed.

Please note that the ISR is disabled during flash operation by default. To keep sending transactions during flash operations, enable *CONFIG_SPI_MASTER_ISR_IN_IRAM* and set `ESP_INTR_FLAG_IRAM` in the member *`spi_bus_config_t::intr_flags`*. In this case, all the transactions queued before starting flash operations will be handled by the ISR in parallel. Also note that the callback of each Device and their callee functions should be in IRAM, or your callback will crash due to cache miss. For more details, see *IRAM-Safe Interrupt Handlers*.

Timing Considerations

As shown in the figure below, there is a delay on the MISO line after the SCLK launch edge and before the signal is latched by the internal register. As a result, the MISO pin setup time is the limiting factor for the SPI clock speed. When the delay is too long, the setup slack is < 0, which means the setup timing requirement is violated and the reading might be incorrect.

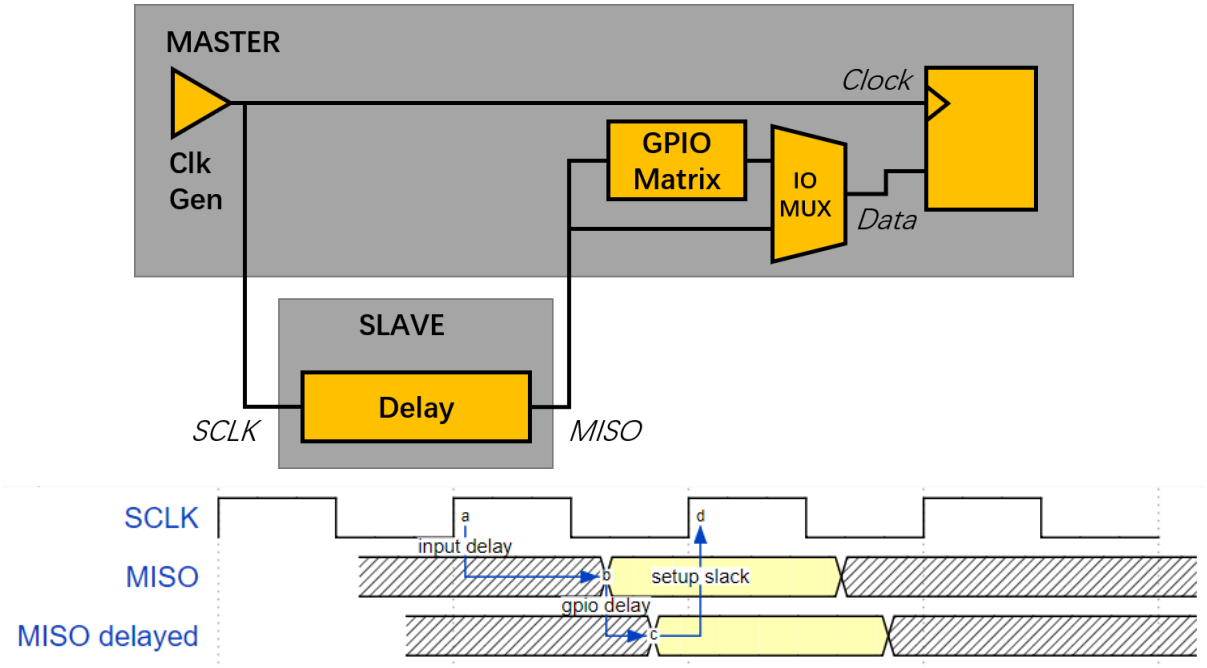

The maximum allowed frequency is dependent on:

- `input_delay_ns` - maximum data valid time on the MISO bus after a clock cycle on SCLK starts
- If the IO_MUX pin or the GPIO Matrix is used

When the GPIO matrix is used, the maximum allowed frequency is reduced to about 33~77% in comparison to the existing *input delay*. To retain a higher frequency, you have to use the IO_MUX pins or the *dummy bit workaround*. You can obtain the maximum reading frequency of the master by using the function `spi_get_freq_limit()`.

Dummy bit workaround: Dummy clocks, during which the Host does not read data, can be inserted before the read phase begins. The Device still sees the dummy clocks and sends out data, but the Host does not read until the read phase comes. This compensates for the lack of the MISO setup time required by the Host and allows the Host to do reading at a higher frequency.

In the ideal case, if the Device is so fast that the input delay is shorter than an APB clock cycle - 12.5 ns - the maximum frequency at which the Host can read (or read and write) in different conditions is as follows:

Frequency Limit (MHz)		Dummy Bits Used By Driver	Comments
GPIO matrix	IO_MUX pins		
26.6	80	No	
40	–	Yes	Half-duplex, no DMA allowed

If the Host only writes data, the *dummy bit workaround* and the frequency check can be disabled by setting the bit *SPI_DEVICE_NO_DUMMY* in the member `spi_device_interface_config_t::flags`. When disabled, the output frequency can be 80MHz, even if the GPIO matrix is used.

`spi_device_interface_config_t::flags`

The SPI master driver still works even if the `input_delay_ns` in the structure `spi_device_interface_config_t` is set to 0. However, setting an accurate value helps to:

- Calculate the frequency limit for full-duplex transactions
- Compensate the timing correctly with dummy bits for half-duplex transactions

You can approximate the maximum data valid time after the launch edge of SPI clocks by checking the statistics in the AC characteristics chapter of your Device's specification or measure the time using an oscilloscope or logic analyzer.

Please note that the actual PCB layout design and excessive loads may increase the input delay. It means that non-optimal wiring and/or a load capacitor on the bus will most likely lead to input delay values exceeding the values given in the Device specification or measured while the bus is floating.

Some typical delay values are shown in the following table. (These data are retrieved when the slave device is on a different physical chip)

Device	Input delay (ns)
Ideal Device	0
ESP32 slave using IO_MUX*	50
ESP32 slave using GPIO_MUX*	75

The MISO path delay (valid time) consists of a slave's *input delay* plus master's *GPIO matrix delay*. This delay determines the frequency limit above which full-duplex transfers will not work as well as the dummy bits used in the half-duplex transactions. The frequency limit is:

Freq limit [MHz] = 80 / (floor(MISO delay[ns]/12.5) + 1)

The figure below shows the relationship between frequency limit and input delay. Two extra APB clock cycle periods should be added to the MISO delay if the master uses the GPIO matrix.

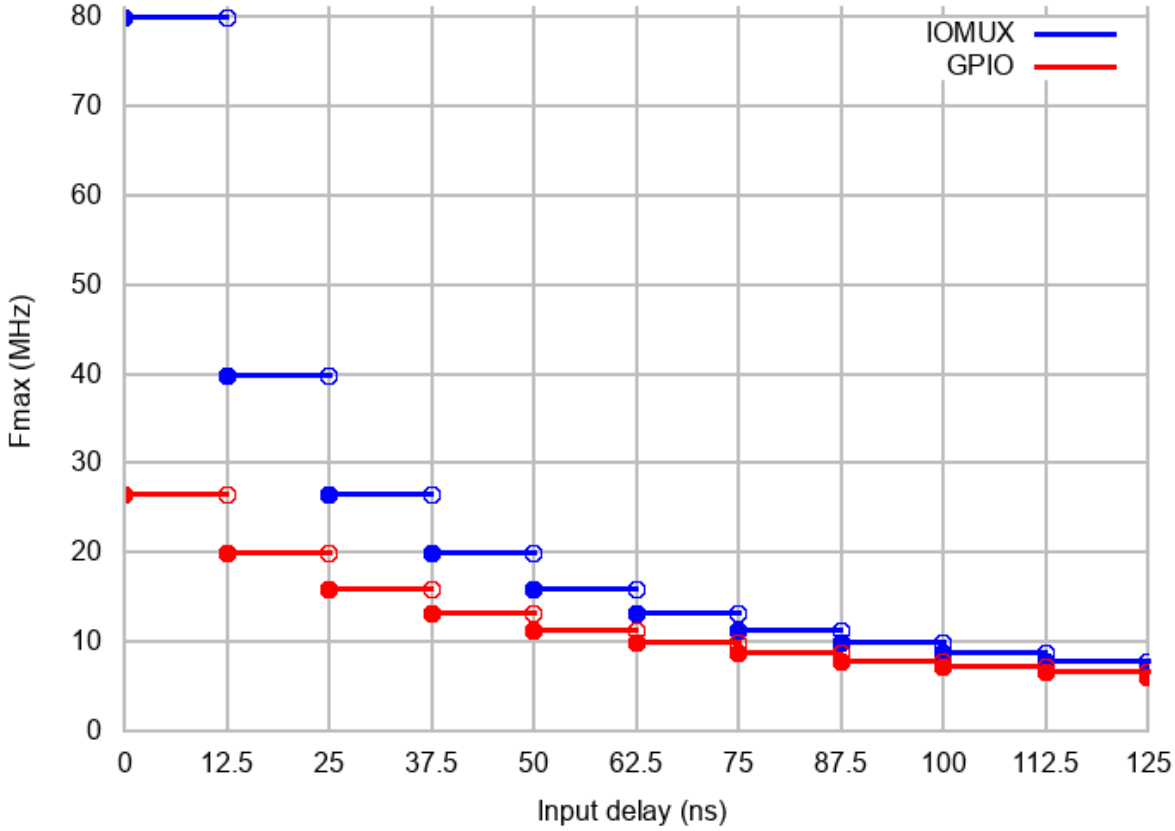

Corresponding frequency limits for different Devices with different *input delay* times are shown in the table below.

Master	Input delay (ns)	MISO path delay (ns)	Freq. limit (MHz)
IO_MUX (0ns)	0	0	80
	50	50	16
	75	75	11.43
GPIO (25ns)	0	25	26.67
	50	75	11.43
	75	100	8.89

Known Issues

1. Half-duplex transactions are not compatible with DMA when both writing and reading phases are used.

If such transactions are required, you have to use one of the alternative solutions:
1. Use full-duplex transactions instead.
2. **Disable DMA by setting the bus initialization function's last parameter to 0 as follows:**
```
ret=spi_bus_initialize(VSPI_HOST, &buscfg, 0);
```
This can prohibit you from transmitting and receiving data longer than 64 bytes. 3. Try using the command and address fields to replace the write phase.

2. Full-duplex transactions are not compatible with the *dummy bit workaround*, hence the frequency is limited. See *dummy bit speed-up workaround*.
3. `dummy_bits` in *`spi_device_interface_config_t`* and *`spi_transaction_ext_t`* are not available when SPI read and write phases are both enabled (regardless of full duplex or half duplex mode).
4. `cs_ena_pretrans` is not compatible with the command and address phases of full-duplex transactions.

Application Example

The code example for using the SPI master half duplex mode to read/write a AT93C46D EEPROM (8-bit mode) can be found in the peripherals/spi_master/hd_eeprom directory of ESP-IDF examples.

API Reference - SPI Common

Header File

- components/hal/include/hal/spi_types.h

Structures

struct **`spi_line_mode_t`**

Line mode of SPI transaction phases: CMD, ADDR, DOUT/DIN.

Public Members

uint8_t **`cmd_lines`**

The line width of command phase, e.g. 2-line-cmd-phase.

uint8_t **`addr_lines`**

The line width of address phase, e.g. 1-line-addr-phase.

uint8_t **`data_lines`**

The line width of data phase, e.g. 4-line-data-phase.

Enumerations

enum **`spi_host_device_t`**

Enum with the three SPI peripherals that are software-accessible in it.

Values:

enumerator **`SPI1_HOST`**

SPI1.

enumerator **`SPI2_HOST`**

SPI2.

enumerator **SPI3_HOST**

SPI3.

enum **spi_event_t**

SPI Events.

Values:

enumerator **SPI_EV_BUF_TX**

The buffer has sent data to master.

enumerator **SPI_EV_BUF_RX**

The buffer has received data from master.

enumerator **SPI_EV_SEND_DMA_READY**

Slave has loaded its TX data buffer to the hardware (DMA).

enumerator **SPI_EV_SEND**

Master has received certain number of the data, the number is determined by Master.

enumerator **SPI_EV_RECV_DMA_READY**

Slave has loaded its RX data buffer to the hardware (DMA).

enumerator **SPI_EV_RECV**

Slave has received certain number of data from master, the number is determined by Master.

enumerator **SPI_EV_CMD9**

Received CMD9 from master.

enumerator **SPI_EV_CMDA**

Received CMDA from master.

enumerator **SPI_EV_TRANS**

A transaction has done.

enum **spi_command_t**

SPI command.

Values:

enumerator **SPI_CMD_HD_WRBUF**

enumerator **SPI_CMD_HD_RDBUF**

enumerator **SPI_CMD_HD_WRDMA**

enumerator **SPI_CMD_HD_RDDMA**

enumerator **SPI_CMD_HD_SEG_END**

enumerator **SPI_CMD_HD_EN_QPI**

enumerator **SPI_CMD_HD_WR_END**

enumerator **SPI_CMD_HD_INT0**

enumerator **SPI_CMD_HD_INT1**

enumerator **SPI_CMD_HD_INT2**

Header File

- components/driver/include/driver/spi_common.h

Functions

esp_err_t **spi_bus_initialize**(*spi_host_device_t* host_id, const *spi_bus_config_t* *bus_config, *spi_dma_chan_t* dma_chan)

Initialize a SPI bus.

Warning: SPI0/1 is not supported

Warning: If a DMA channel is selected, any transmit and receive buffer used should be allocated in DMA-capable memory.

Warning: The ISR of SPI is always executed on the core which calls this function. Never starve the ISR on this core or the SPI transactions will not be handled.

Parameters

- **host_id** –SPI peripheral that controls this bus
- **bus_config** –Pointer to a *spi_bus_config_t* struct specifying how the host should be initialized
- **dma_chan** –- Selecting a DMA channel for an SPI bus allows transactions on the bus with size only limited by the amount of internal memory.
  - Selecting SPI_DMA_DISABLED limits the size of transactions.
  - Set to SPI_DMA_DISABLED if only the SPI flash uses this bus.
  - Set to SPI_DMA_CH_AUTO to let the driver to allocate the DMA channel.

Returns

- ESP_ERR_INVALID_ARG if configuration is invalid
- ESP_ERR_INVALID_STATE if host already is in use
- ESP_ERR_NOT_FOUND if there is no available DMA channel
- ESP_ERR_NO_MEM if out of memory
- ESP_OK on success

esp_err_t **spi_bus_free**(*spi_host_device_t* host_id)

Free a SPI bus.

Warning: In order for this to succeed, all devices have to be removed first.

Parameters **host_id** – SPI peripheral to free

Returns

- ESP_ERR_INVALID_ARG if parameter is invalid
- ESP_ERR_INVALID_STATE if bus hasn't been initialized before, or not all devices on the bus are freed
- ESP_OK on success

Structures

struct **spi_bus_config_t**

This is a configuration structure for a SPI bus.

You can use this structure to specify the GPIO pins of the bus. Normally, the driver will use the GPIO matrix to route the signals. An exception is made when all signals either can be routed through the IO_MUX or are -1. In that case, the IO_MUX is used, allowing for >40MHz speeds.

Note: Be advised that the slave driver does not use the quadwp/quadhd lines and fields in *spi_bus_config_t* refering to these lines will be ignored and can thus safely be left uninitialized.

Public Members

int **mosi_io_num**

GPIO pin for Master Out Slave In (=spi_d) signal, or -1 if not used.

int **data0_io_num**

GPIO pin for spi data0 signal in quad/octal mode, or -1 if not used.

int **miso_io_num**

GPIO pin for Master In Slave Out (=spi_q) signal, or -1 if not used.

int **data1_io_num**

GPIO pin for spi data1 signal in quad/octal mode, or -1 if not used.

int **sclk_io_num**

GPIO pin for SPI Clock signal, or -1 if not used.

int **quadwp_io_num**

GPIO pin for WP (Write Protect) signal, or -1 if not used.

int **data2_io_num**

GPIO pin for spi data2 signal in quad/octal mode, or -1 if not used.

int **quadhd_io_num**

GPIO pin for HD (Hold) signal, or -1 if not used.

int **data3_io_num**

GPIO pin for spi data3 signal in quad/octal mode, or -1 if not used.

int **data4_io_num**

GPIO pin for spi data4 signal in octal mode, or -1 if not used.

int **data5_io_num**

GPIO pin for spi data5 signal in octal mode, or -1 if not used.

int **data6_io_num**

GPIO pin for spi data6 signal in octal mode, or -1 if not used.

int **data7_io_num**

GPIO pin for spi data7 signal in octal mode, or -1 if not used.

int **max_transfer_sz**

Maximum transfer size, in bytes. Defaults to 4092 if 0 when DMA enabled, or to `SOC_SPI_MAXIMUM_BUFFER_SIZE` if DMA is disabled.

uint32_t **flags**

Abilities of bus to be checked by the driver. Or-ed value of `SPICOMMON_BUSFLAG_*` flags.

int **intr_flags**

Interrupt flag for the bus to set the priority, and IRAM attribute, see `esp_intr_alloc.h`. Note that the EDGE, INTRDISABLED attribute are ignored by the driver. Note that if ESP_INTR_FLAG_IRAM is set, ALL the callbacks of the driver, and their callee functions, should be put in the IRAM.

Macros

SPI_MAX_DMA_LEN

SPI_SWAP_DATA_TX(DATA, LEN)

Transform unsigned integer of length <= 32 bits to the format which can be sent by the SPI driver directly.

E.g. to send 9 bits of data, you can:

```
uint16_t data = SPI_SWAP_DATA_TX(0x145, 9);
```

Then points tx_buffer to `&data`.

Parameters

- **DATA** –Data to be sent, can be uint8_t, uint16_t or uint32_t.
- **LEN** –Length of data to be sent, since the SPI peripheral sends from the MSB, this helps to shift the data to the MSB.

SPI_SWAP_DATA_RX(DATA, LEN)

Transform received data of length <= 32 bits to the format of an unsigned integer.

E.g. to transform the data of 15 bits placed in a 4-byte array to integer:

```
uint16_t data = SPI_SWAP_DATA_RX(*(uint32_t*)t->rx_data, 15);
```

Parameters

- **DATA** –Data to be rearranged, can be uint8_t, uint16_t or uint32_t.
- **LEN** –Length of data received, since the SPI peripheral writes from the MSB, this helps to shift the data to the LSB.

SPICOMMON_BUSFLAG_SLAVE

Initialize I/O in slave mode.

SPICOMMON_BUSFLAG_MASTER

Initialize I/O in master mode.

SPICOMMON_BUSFLAG_IOMUX_PINS

Check using iomux pins. Or indicates the pins are configured through the IO mux rather than GPIO matrix.

SPICOMMON_BUSFLAG_GPIO_PINS

Force the signals to be routed through GPIO matrix. Or indicates the pins are routed through the GPIO matrix.

SPICOMMON_BUSFLAG_SCLK

Check existing of SCLK pin. Or indicates CLK line initialized.

SPICOMMON_BUSFLAG_MISO

Check existing of MISO pin. Or indicates MISO line initialized.

SPICOMMON_BUSFLAG_MOSI

Check existing of MOSI pin. Or indicates MOSI line initialized.

SPICOMMON_BUSFLAG_DUAL

Check MOSI and MISO pins can output. Or indicates bus able to work under DIO mode.

SPICOMMON_BUSFLAG_WPHD

Check existing of WP and HD pins. Or indicates WP & HD pins initialized.

SPICOMMON_BUSFLAG_QUAD

Check existing of MOSI/MISO/WP/HD pins as output. Or indicates bus able to work under QIO mode.

SPICOMMON_BUSFLAG_IO4_IO7

Check existing of IO4~IO7 pins. Or indicates IO4~IO7 pins initialized.

SPICOMMON_BUSFLAG_OCTAL

Check existing of MOSI/MISO/WP/HD/SPIIO4/SPIIO5/SPIIO6/SPIIO7 pins as output. Or indicates bus able to work under octal mode.

SPICOMMON_BUSFLAG_NATIVE_PINS

Type Definitions

typedef *spi_common_dma_t* **spi_dma_chan_t**

Enumerations

enum **spi_common_dma_t**

SPI DMA channels.

Values:

enumerator **SPI_DMA_DISABLED**

Do not enable DMA for SPI.

enumerator **SPI_DMA_CH1**

Enable DMA, select DMA Channel 1.

enumerator **SPI_DMA_CH2**

Enable DMA, select DMA Channel 2.

enumerator **SPI_DMA_CH_AUTO**

Enable DMA, channel is automatically selected by driver.

API Reference - SPI Master

Header File

- components/driver/include/driver/spi_master.h

Functions

esp_err_t **spi_bus_add_device**(*spi_host_device_t* host_id, const *spi_device_interface_config_t* *dev_config, *spi_device_handle_t* *handle)

Allocate a device on a SPI bus.

This initializes the internal structures for a device, plus allocates a CS pin on the indicated SPI master peripheral and routes it to the indicated GPIO. All SPI master devices have three CS pins and can thus control up to three devices.

Note: While in general, speeds up to 80MHz on the dedicated SPI pins and 40MHz on GPIO-matrix-routed pins are supported, full-duplex transfers routed over the GPIO matrix only support speeds up to 26MHz.

Parameters

- **host_id** –SPI peripheral to allocate device on
- **dev_config** –SPI interface protocol config for the device
- **handle** –Pointer to variable to hold the device handle

Returns

- ESP_ERR_INVALID_ARG if parameter is invalid
- ESP_ERR_NOT_FOUND if host doesn't have any free CS slots
- ESP_ERR_NO_MEM if out of memory
- ESP_OK on success

esp_err_t **spi_bus_remove_device**(*spi_device_handle_t* handle)

Remove a device from the SPI bus.

Parameters **handle** –Device handle to free

Returns

- ESP_ERR_INVALID_ARG if parameter is invalid
- ESP_ERR_INVALID_STATE if device already is freed
- ESP_OK on success

esp_err_t **spi_device_queue_trans**(*spi_device_handle_t* handle, *spi_transaction_t* *trans_desc, TickType_t ticks_to_wait)

Queue a SPI transaction for interrupt transaction execution. Get the result by `spi_device_get_trans_result`.

Note: Normally a device cannot start (queue) polling and interrupt transactions simultaneously.

Parameters

- **handle** –Device handle obtained using spi_host_add_dev
- **trans_desc** –Description of transaction to execute
- **ticks_to_wait** –Ticks to wait until there's room in the queue; use portMAX_DELAY to never time out.

Returns

- ESP_ERR_INVALID_ARG if parameter is invalid. This can happen if SPI_TRANS_CS_KEEP_ACTIVE flag is specified while the bus was not acquired (`spi_device_acquire_bus()` should be called first)
- ESP_ERR_TIMEOUT if there was no room in the queue before ticks_to_wait expired
- ESP_ERR_NO_MEM if allocating DMA-capable temporary buffer failed
- ESP_ERR_INVALID_STATE if previous transactions are not finished
- ESP_OK on success

esp_err_t **spi_device_get_trans_result**(*spi_device_handle_t* handle, *spi_transaction_t* **trans_desc, TickType_t ticks_to_wait)

Get the result of a SPI transaction queued earlier by `spi_device_queue_trans`.

This routine will wait until a transaction to the given device succesfully completed. It will then return the description of the completed transaction so software can inspect the result and e.g. free the memory or re-use the buffers.

Parameters

- **handle** –Device handle obtained using spi_host_add_dev
- **trans_desc** –Pointer to variable able to contain a pointer to the description of the transaction that is executed. The descriptor should not be modified until the descriptor is returned by spi_device_get_trans_result.
- **ticks_to_wait** –Ticks to wait until there's a returned item; use portMAX_DELAY to never time out.

Returns

- ESP_ERR_INVALID_ARG if parameter is invalid
- ESP_ERR_TIMEOUT if there was no completed transaction before ticks_to_wait expired
- ESP_OK on success

esp_err_t **spi_device_transmit**(*spi_device_handle_t* handle, *spi_transaction_t* *trans_desc)

Send a SPI transaction, wait for it to complete, and return the result.

This function is the equivalent of calling spi_device_queue_trans() followed by spi_device_get_trans_result(). Do not use this when there is still a transaction separately queued (started) from spi_device_queue_trans() or polling_start/transmit that hasn't been finalized.

Note: This function is not thread safe when multiple tasks access the same SPI device. Normally a device cannot start (queue) polling and interrupt transactions simutanuously.

Parameters

- **handle** –Device handle obtained using spi_host_add_dev
- **trans_desc** –Description of transaction to execute

Returns

- ESP_ERR_INVALID_ARG if parameter is invalid
- ESP_OK on success

esp_err_t **spi_device_polling_start**(*spi_device_handle_t* handle, *spi_transaction_t* *trans_desc, TickType_t ticks_to_wait)

Immediately start a polling transaction.

Note: Normally a device cannot start (queue) polling and interrupt transactions simutanuously. Moreover, a

device cannot start a new polling transaction if another polling transaction is not finished.

Parameters

- **handle** –Device handle obtained using spi_host_add_dev
- **trans_desc** –Description of transaction to execute
- **ticks_to_wait** –Ticks to wait until there's room in the queue; currently only portMAX_DELAY is supported.

Returns

- ESP_ERR_INVALID_ARG if parameter is invalid. This can happen if SPI_TRANS_CS_KEEP_ACTIVE flag is specified while the bus was not acquired (`spi_device_acquire_bus()` should be called first)
- ESP_ERR_TIMEOUT if the device cannot get control of the bus before `ticks_to_wait` expired
- ESP_ERR_NO_MEM if allocating DMA-capable temporary buffer failed
- ESP_ERR_INVALID_STATE if previous transactions are not finished
- ESP_OK on success

esp_err_t **spi_device_polling_end**(*spi_device_handle_t* handle, TickType_t ticks_to_wait)

Poll until the polling transaction ends.

This routine will not return until the transaction to the given device has succesfully completed. The task is not blocked, but actively busy-spins for the transaction to be completed.

Parameters

- **handle** –Device handle obtained using spi_host_add_dev
- **ticks_to_wait** –Ticks to wait until there's a returned item; use portMAX_DELAY to never time out.

Returns

- ESP_ERR_INVALID_ARG if parameter is invalid
- ESP_ERR_TIMEOUT if the transaction cannot finish before ticks_to_wait expired
- ESP_OK on success

esp_err_t **spi_device_polling_transmit**(*spi_device_handle_t* handle, *spi_transaction_t* *trans_desc)

Send a polling transaction, wait for it to complete, and return the result.

This function is the equivalent of calling spi_device_polling_start() followed by spi_device_polling_end(). Do not use this when there is still a transaction that hasn't been finalized.

Note: This function is not thread safe when multiple tasks access the same SPI device. Normally a device cannot start (queue) polling and interrupt transactions simutanuously.

Parameters

- **handle** –Device handle obtained using spi_host_add_dev
- **trans_desc** –Description of transaction to execute

Returns

- ESP_ERR_INVALID_ARG if parameter is invalid
- ESP_OK on success

esp_err_t **spi_device_acquire_bus**(*spi_device_handle_t* device, TickType_t wait)

Occupy the SPI bus for a device to do continuous transactions.

Transactions to all other devices will be put off until `spi_device_release_bus` is called.

Note: The function will wait until all the existing transactions have been sent.

Parameters

- **device** –The device to occupy the bus.
- **wait** –Time to wait before the the bus is occupied by the device. Currently MUST set to portMAX_DELAY.

Returns

- ESP_ERR_INVALID_ARG : `wait` is not set to portMAX_DELAY.
- ESP_OK : Success.

void **spi_device_release_bus**(*spi_device_handle_t* dev)

Release the SPI bus occupied by the device. All other devices can start sending transactions.

Parameters **dev** –The device to release the bus.

int **spi_cal_clock**(int fapb, int hz, int duty_cycle, uint32_t *reg_o)

Calculate the working frequency that is most close to desired frequency, and also the register value.

Deprecated:

The app shouldn't care about the register. Call `spi_get_actual_clock` instead.

Parameters

- **fapb** –The frequency of apb clock, should be `APB_CLK_FREQ`.
- **hz** –Desired working frequency
- **duty_cycle** –Duty cycle of the spi clock
- **reg_o** –Output of value to be set in clock register, or NULL if not needed.

Returns Actual working frequency that most fit.

int **spi_get_actual_clock**(int fapb, int hz, int duty_cycle)

Calculate the working frequency that is most close to desired frequency.

Parameters

- **fapb** –The frequency of apb clock, should be `APB_CLK_FREQ`.
- **hz** –Desired working frequency
- **duty_cycle** –Duty cycle of the spi clock

Returns Actual working frequency that most fit.

void **spi_get_timing**(bool gpio_is_used, int input_delay_ns, int eff_clk, int *dummy_o, int *cycles_remain_o)

Calculate the timing settings of specified frequency and settings.

Note: If **dummy_o* is not zero, it means dummy bits should be applied in half duplex mode, and full duplex mode may not work.

Parameters

- **gpio_is_used** –True if using GPIO matrix, or False if iomux pins are used.
- **input_delay_ns** –Input delay from SCLK launch edge to MISO data valid.
- **eff_clk** –Effective clock frequency (in Hz) from spi_cal_clock.
- **dummy_o** –Address of dummy bits used output. Set to NULL if not needed.
- **cycles_remain_o** –Address of cycles remaining (after dummy bits are used) output.
  - -1 If too many cycles remaining, suggest to compensate half a clock.
  - 0 If no remaining cycles or dummy bits are not used.
  - positive value: cycles suggest to compensate.

int **spi_get_freq_limit**(bool gpio_is_used, int input_delay_ns)

Get the frequency limit of current configurations. SPI master working at this limit is OK, while above the limit, full duplex mode and DMA will not work, and dummy bits will be aplied in the half duplex mode.

Parameters

- **gpio_is_used** –True if using GPIO matrix, or False if native pins are used.

- **input_delay_ns** –Input delay from SCLK launch edge to MISO data valid.

Returns Frequency limit of current configurations.

Structures

struct **spi_device_interface_config_t**

This is a configuration for a SPI slave device that is connected to one of the SPI buses.

Public Members

uint8_t **command_bits**

Default amount of bits in command phase (0-16), used when `SPI_TRANS_VARIABLE_CMD` is not used, otherwise ignored.

uint8_t **address_bits**

Default amount of bits in address phase (0-64), used when `SPI_TRANS_VARIABLE_ADDR` is not used, otherwise ignored.

uint8_t **dummy_bits**

Amount of dummy bits to insert between address and data phase.

uint8_t **mode**

SPI mode, representing a pair of (CPOL, CPHA) configuration:

- 0: (0, 0)
- 1: (0, 1)
- 2: (1, 0)
- 3: (1, 1)

uint16_t **duty_cycle_pos**

Duty cycle of positive clock, in 1/256th increments (128 = 50%/50% duty). Setting this to 0 (=not setting it) is equivalent to setting this to 128.

uint16_t **cs_ena_pretrans**

Amount of SPI bit-cycles the cs should be activated before the transmission (0-16). This only works on half-duplex transactions.

uint8_t **cs_ena_posttrans**

Amount of SPI bit-cycles the cs should stay active after the transmission (0-16)

int **clock_speed_hz**

Clock speed, divisors of 80MHz, in Hz. See `SPI_MASTER_FREQ_*`.

int **input_delay_ns**

Maximum data valid time of slave. The time required between SCLK and MISO valid, including the possible clock delay from slave to master. The driver uses this value to give an extra delay before the MISO is ready on the line. Leave at 0 unless you know you need a delay. For better timing performance at high frequency (over 8MHz), it' s suggest to have the right value.

int **spics_io_num**

CS GPIO pin for this device, or -1 if not used.

uint32_t **flags**

Bitwise OR of SPI_DEVICE_* flags.

int **queue_size**

Transaction queue size. This sets how many transactions can be 'in the air' (queued using spi_device_queue_trans but not yet finished using spi_device_get_trans_result) at the same time.

transaction_cb_t **pre_cb**

Callback to be called before a transmission is started.

This callback is called within interrupt context should be in IRAM for best performance, see "Transferring Speed" section in the SPI Master documentation for full details. If not, the callback may crash during flash operation when the driver is initialized with ESP_INTR_FLAG_IRAM.

transaction_cb_t **post_cb**

Callback to be called after a transmission has completed.

This callback is called within interrupt context should be in IRAM for best performance, see "Transferring Speed" section in the SPI Master documentation for full details. If not, the callback may crash during flash operation when the driver is initialized with ESP_INTR_FLAG_IRAM.

struct **spi_transaction_t**

This structure describes one SPI transaction. The descriptor should not be modified until the transaction finishes.

Public Members

uint32_t **flags**

Bitwise OR of SPI_TRANS_* flags.

uint16_t **cmd**

Command data, of which the length is set in the `command_bits` of *spi_device_interface_config_t*.

NOTE: this field, used to be "command" in ESP-IDF 2.1 and before, is re-written to be used in a new way in ESP-IDF 3.0.

Example: write 0x0123 and command_bits=12 to send command 0x12, 0x3_ (in previous version, you may have to write 0x3_12).

uint64_t **addr**

Address data, of which the length is set in the `address_bits` of *spi_device_interface_config_t*.

NOTE: this field, used to be "address" in ESP-IDF 2.1 and before, is re-written to be used in a new way in ESP-IDF3.0.

Example: write 0x123400 and address_bits=24 to send address of 0x12, 0x34, 0x00 (in previous version, you may have to write 0x12340000).

size_t **length**

Total data length, in bits.

size_t **rxlength**

Total data length received, should be not greater than `length` in full-duplex mode (0 defaults this to the value of `length`).

void ***user**

User-defined variable. Can be used to store eg transaction ID.

const void ***tx_buffer**

Pointer to transmit buffer, or NULL for no MOSI phase.

uint8_t **tx_data**[4]

If SPI_TRANS_USE_TXDATA is set, data set here is sent directly from this variable.

void ***rx_buffer**

Pointer to receive buffer, or NULL for no MISO phase. Written by 4 bytes-unit if DMA is used.

uint8_t **rx_data**[4]

If SPI_TRANS_USE_RXDATA is set, data is received directly to this variable.

struct **spi_transaction_ext_t**

This struct is for SPI transactions which may change their address and command length. Please do set the flags in base to `SPI_TRANS_VARIABLE_CMD_ADR` to use the bit length here.

Public Members

struct *spi_transaction_t* **base**

Transaction data, so that pointer to *spi_transaction_t* can be converted into *spi_transaction_ext_t*.

uint8_t **command_bits**

The command length in this transaction, in bits.

uint8_t **address_bits**

The address length in this transaction, in bits.

uint8_t **dummy_bits**

The dummy length in this transaction, in bits.

Macros

SPI_MASTER_FREQ_8M

SPI master clock is divided by 80MHz apb clock. Below defines are example frequencies, and are accurate. Be free to specify a random frequency, it will be rounded to closest frequency (to macros below if above 8MHz). 8MHz

SPI_MASTER_FREQ_9M

8.89MHz

SPI_MASTER_FREQ_10M

10MHz

SPI_MASTER_FREQ_11M

11.43MHz

SPI_MASTER_FREQ_13M

13.33MHz

SPI_MASTER_FREQ_16M

16MHz

SPI_MASTER_FREQ_20M

20MHz

SPI_MASTER_FREQ_26M

26.67MHz

SPI_MASTER_FREQ_40M

40MHz

SPI_MASTER_FREQ_80M

80MHz

SPI_DEVICE_TXBIT_LSBFIRST

Transmit command/address/data LSB first instead of the default MSB first.

SPI_DEVICE_RXBIT_LSBFIRST

Receive data LSB first instead of the default MSB first.

SPI_DEVICE_BIT_LSBFIRST

Transmit and receive LSB first.

SPI_DEVICE_3WIRE

Use MOSI (=spid) for both sending and receiving data.

SPI_DEVICE_POSITIVE_CS

Make CS positive during a transaction instead of negative.

SPI_DEVICE_HALFDUPLEX

Transmit data before receiving it, instead of simultaneously.

SPI_DEVICE_CLK_AS_CS

Output clock on CS line if CS is active.

SPI_DEVICE_NO_DUMMY

There are timing issue when reading at high frequency (the frequency is related to whether iomux pins are used, valid time after slave sees the clock).

- In half-duplex mode, the driver automatically inserts dummy bits before reading phase to fix the timing issue. Set this flag to disable this feature.
- In full-duplex mode, however, the hardware cannot use dummy bits, so there is no way to prevent data being read from getting corrupted. Set this flag to confirm that you're going to work with output only, or read without dummy bits at your own risk.

SPI_DEVICE_DDRCLK

SPI_TRANS_MODE_DIO

Transmit/receive data in 2-bit mode.

SPI_TRANS_MODE_QIO

Transmit/receive data in 4-bit mode.

SPI_TRANS_USE_RXDATA

Receive into rx_data member of *spi_transaction_t* instead into memory at rx_buffer.

SPI_TRANS_USE_TXDATA

Transmit tx_data member of *spi_transaction_t* instead of data at tx_buffer. Do not set tx_buffer when using this.

SPI_TRANS_MODE_DIOQIO_ADDR

Also transmit address in mode selected by SPI_MODE_DIO/SPI_MODE_QIO.

SPI_TRANS_VARIABLE_CMD

Use the `command_bits` in *spi_transaction_ext_t* rather than default value in *spi_device_interface_config_t*.

SPI_TRANS_VARIABLE_ADDR

Use the `address_bits` in *spi_transaction_ext_t* rather than default value in *spi_device_interface_config_t*.

SPI_TRANS_VARIABLE_DUMMY

Use the `dummy_bits` in *spi_transaction_ext_t* rather than default value in *spi_device_interface_config_t*.

SPI_TRANS_CS_KEEP_ACTIVE

Keep CS active after data transfer.

SPI_TRANS_MULTILINE_CMD

The data lines used at command phase is the same as data phase (otherwise, only one data line is used at command phase)

SPI_TRANS_MODE_OCT

Transmit/receive data in 8-bit mode.

SPI_TRANS_MULTILINE_ADDR

The data lines used at address phase is the same as data phase (otherwise, only one data line is used at address phase)

Type Definitions

typedef struct *spi_transaction_t* **spi_transaction_t**

typedef void (***transaction_cb_t**)(*spi_transaction_t* *trans)

typedef struct spi_device_t ***spi_device_handle_t**

Handle for a device on a SPI bus.

2.3.18 SPI Slave Driver

SPI Slave driver is a program that controls ESP32’s SPI peripherals while they function as slaves.

Overview of ESP32’s SPI peripherals

ESP32 integrates two general purpose SPI controllers which can be used as slave nodes driven by an off-chip SPI master

- SPI2, sometimes referred to as HSPI
- SPI3, sometimes referred to as VSPI

SPI2 and SPI3 have independent signal buses with the same respective names.

Terminology

The terms used in relation to the SPI slave driver are given in the table below.

Term	Definition
Host	The SPI controller peripheral external to ESP32 that initiates SPI transmissions over the bus, and acts as an SPI Master.
Device	SPI slave device (general purpose SPI controller). Each Device shares the MOSI, MISO and SCLK signals but is only active on the bus when the Host asserts the Device's individual CS line.
Bus	A signal bus, common to all Devices connected to one Host. In general, a bus includes the following lines: MISO, MOSI, SCLK, one or more CS lines, and, optionally, QUADWP and QUADHD. So Devices are connected to the same lines, with the exception that each Device has its own CS line. Several Devices can also share one CS line if connected in the daisy-chain manner.
• **MISO**	Master In, Slave Out, a.k.a. Q. Data transmission from a Device to Host.
• **MOSI**	Master Out, Slave in, a.k.a. D. Data transmission from a Host to Device.
• **SCLK**	Serial Clock. Oscillating signal generated by a Host that keeps the transmission of data bits in sync.
• **CS**	Chip Select. Allows a Host to select individual Device(s) connected to the bus in order to send or receive data.
• **QUADWP**	Write Protect signal. Only used for 4-bit (qio/qout) transactions.
• **QUADHD**	Hold signal. Only used for 4-bit (qio/qout) transactions.
• **Assertion**	The action of activating a line. The opposite action of returning the line back to inactive (back to idle) is called *de-assertion*.
Transaction	One instance of a Host asserting a CS line, transferring data to and from a Device, and de-asserting the CS line. Transactions are atomic, which means they can never be interrupted by another transaction.
Launch edge	Edge of the clock at which the source register *launches* the signal onto the line.
Latch edge	Edge of the clock at which the destination register *latches in* the signal.

Driver Features

The SPI slave driver allows using the SPI peripherals as full-duplex Devices. The driver can send/receive transactions up to 64 bytes in length, or utilize DMA to send/receive longer transactions. However, there are some *known issues* related to DMA.

SPI Transactions

A full-duplex SPI transaction begins when the Host asserts the CS line and starts sending out clock pulses on the SCLK line. Every clock pulse, a data bit is shifted from the Host to the Device on the MOSI line and back on the MISO line at the same time. At the end of the transaction, the Host de-asserts the CS line.

The attributes of a transaction are determined by the configuration structure for an SPI host acting as a slave device *spi_slave_interface_config_t*, and transaction configuration structure *spi_slave_transaction_t*.

As not every transaction requires both writing and reading data, you have a choice to configure the *spi_transaction_t* structure for TX only, RX only, or TX and RX transactions. If *spi_slave_transaction_t::rx_buffer* is set to NULL, the read phase will be skipped. If *spi_slave_transaction_t::tx_buffer* is set to NULL, the write phase will be skipped.

Note: A Host should not start a transaction before its Device is ready for receiving data. It is recommended to use another GPIO pin for a handshake signal to sync the Devices. For more details, see *Transaction Interval*.

Driver Usage

- Initialize an SPI peripheral as a Device by calling the function cpp:func:*spi_slave_initialize*. Make sure to set the correct I/O pins in the struct `bus_config`. Set the unused signals to `-1`.

If transactions will be longer than 32 bytes, allow a DMA channel 1 or 2 by setting the parameter `dma_chan` to `1` or `2` respectively. Otherwise, set `dma_chan` to `0`.

- Before initiating transactions, fill one or more *spi_slave_transaction_t* structs with the transaction parameters required. Either queue all transactions by calling the function *spi_slave_queue_trans()* and, at a later time, query the result by using the function *spi_slave_get_trans_result()*, or handle all requests individually by feeding them into *spi_slave_transmit()*. The latter two functions will be blocked until the Host has initiated and finished a transaction, causing the queued data to be sent and received.
- (Optional) To unload the SPI slave driver, call *spi_slave_free()*.

Transaction Data and Master/Slave Length Mismatches

Normally, the data that needs to be transferred to or from a Device is read or written to a chunk of memory indicated by the `rx_buffer` and `tx_buffer` members of the *spi_transaction_t* structure. The SPI driver can be configured to use DMA for transfers, in which case these buffers must be allocated in DMA-capable memory using `pvPortMallocCaps(size, MALLOC_CAP_DMA)`.

The amount of data that the driver can read or write to the buffers is limited by the member *spi_transaction_t::length*. However, this member does not define the actual length of an SPI transaction. A transaction's length is determined by a Host which drives the clock and CS lines. The actual length of the transmission can be read only after a transaction is finished from the member *spi_slave_transaction_t::trans_len*.

If the length of the transmission is greater than the buffer length, only the initial number of bits specified in the `length` member will be sent and received. In this case, `trans_len` is set to `length` instead of the actual transaction length. To meet the actual transaction length requirements, set `length` to a value greater than the maximum `trans_len` expected. If the transmission length is shorter than the buffer length, only the data equal to the length of the buffer will be transmitted.

GPIO Matrix and IO_MUX

Most of ESP32's peripheral signals have direct connection to their dedicated IO_MUX pins. However, the signals can also be routed to any other available pins using the less direct GPIO matrix.

If at least one signal is routed through the GPIO matrix, then all signals will be routed through it. The GPIO matrix samples all signals at 80 MHz and transmits them between the GPIO and the peripheral.

If the driver is configured so that all SPI signals are either routed to their dedicated IO_MUX pins or are not connected at all, the GPIO matrix will be bypassed.

The GPIO matrix introduces flexibility of routing but also increases the input delay of the MISO signal, which makes MISO setup time violations more likely. If SPI needs to operate at high speeds, use dedicated IO_MUX pins.

Note: For more details about the influence of the MISO input delay on the maximum clock frequency, see *Timing Considerations*.

The IO_MUX pins for SPI buses are given below.

Pin Name	SPI2	SPI3
	GPIO Number	
CS0*	15	5
SCLK	14	18
MISO	12	19
MOSI	13	23
QUADWP	2	22
QUADHD	4	21

- Only the first Device attached to the bus can use the CS0 pin.

Speed and Timing Considerations

Transaction Interval The ESP32 SPI slave peripherals are designed as general purpose Devices controlled by a CPU. As opposed to dedicated slaves, CPU-based SPI Devices have a limited number of pre-defined registers. All transactions must be handled by the CPU, which means that the transfers and responses are not real-time, and there might be noticeable latency.

As a solution, a Device's response rate can be doubled by using the functions `spi_slave_queue_trans()` and then `spi_slave_get_trans_result()` instead of using `spi_slave_transmit()`.

You can also configure a GPIO pin through which the Device will signal to the Host when it is ready for a new transaction. A code example of this can be found in peripherals/spi_slave.

SCLK Frequency Requirements The SPI slaves are designed to operate at up to 10 MHz. The data cannot be recognized or received correctly if the clock is too fast or does not have a 50% duty cycle.

On top of that, there are additional requirements for the data to meet the timing constraints:

- **Read (MOSI):** The Device can read data correctly only if the data is already set at the launch edge. Although it is usually the case for most masters.
- **Write (MISO):** The output delay of the MISO signal needs to be shorter than half of a clock cycle period so that the MISO line is stable before the next latch edge. Given that the clock is balanced, the output delay and frequency limitations in different cases are given below.

	Output delay of MISO (ns)	Freq. limit (MHz)
IO_MUX	43.75	<11.4
GPIO matrix	68.75	<7.2

Note: 1. If the frequency is equal to the limitation, it can lead to random errors. 2. The clock uncertainty between Host and Device (12.5ns) is included. 3. The output delay is measured under ideal circumstances (no load). If the MISO pin is heavily loaded, the output delay will be longer, and the maximum allowed frequency will be lower.
Exception: The frequency is allowed to be higher if the master has more tolerance for the MISO setup time, e.g., latch data at the next edge, or configurable latching time.

Restrictions and Known Issues

1. If DMA is enabled, the rx buffer should be word-aligned (starting from a 32-bit boundary and having a length of multiples of 4 bytes). Otherwise, DMA may write incorrectly or not in a boundary aligned manner. The driver reports an error if this condition is not satisfied.
   Also, a Host should write lengths that are multiples of 4 bytes. The data with inappropriate lengths will be discarded.
2. Furthermore, DMA requires SPI modes 1 and 3. For SPI modes 0 and 2, the MISO signal has to be launched half a clock cycle earlier to meet the timing. The new timing is as follows:

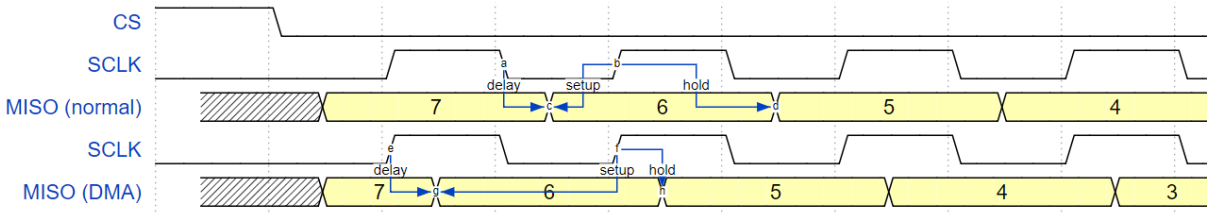

If DMA is enabled, a Device's launch edge is half of an SPI clock cycle ahead of the normal time, shifting to the Master's actual latch edge. In this case, if the GPIO matrix is bypassed, the hold time for data sampling is 68.75 ns and no longer a half of an SPI clock cycle. If the GPIO matrix is used, the hold time will increase to 93.75 ns. The Host should sample the data immediately at the latch edge or communicate in SPI modes 1 or 3. If your Host cannot meet these timing requirements, initialize your Device without DMA.

Application Example

The code example for Device/Host communication can be found in the peripherals/spi_slave directory of ESP-IDF examples.

API Reference

Header File

- components/driver/include/driver/spi_slave.h

Functions

esp_err_t **spi_slave_initialize**(*spi_host_device_t* host, const *spi_bus_config_t* *bus_config, const *spi_slave_interface_config_t* *slave_config, *spi_dma_chan_t* dma_chan)

Initialize a SPI bus as a slave interface.

Warning: SPI0/1 is not supported

Warning: If a DMA channel is selected, any transmit and receive buffer used should be allocated in DMA-capable memory.

Warning: The ISR of SPI is always executed on the core which calls this function. Never starve the ISR on this core or the SPI transactions will not be handled.

Parameters

- **host** –SPI peripheral to use as a SPI slave interface

- **bus_config** –Pointer to a *spi_bus_config_t* struct specifying how the host should be initialized
- **slave_config** –Pointer to a *spi_slave_interface_config_t* struct specifying the details for the slave interface
- **dma_chan** –- Selecting a DMA channel for an SPI bus allows transactions on the bus with size only limited by the amount of internal memory.
  - Selecting SPI_DMA_DISABLED limits the size of transactions.
  - Set to SPI_DMA_DISABLED if only the SPI flash uses this bus.
  - Set to SPI_DMA_CH_AUTO to let the driver to allocate the DMA channel.

Returns

- ESP_ERR_INVALID_ARG if configuration is invalid
- ESP_ERR_INVALID_STATE if host already is in use
- ESP_ERR_NOT_FOUND if there is no available DMA channel
- ESP_ERR_NO_MEM if out of memory
- ESP_OK on success

esp_err_t **spi_slave_free**(*spi_host_device_t* host)

Free a SPI bus claimed as a SPI slave interface.

Parameters **host** –SPI peripheral to free

Returns

- ESP_ERR_INVALID_ARG if parameter is invalid
- ESP_ERR_INVALID_STATE if not all devices on the bus are freed
- ESP_OK on success

esp_err_t **spi_slave_queue_trans**(*spi_host_device_t* host, const *spi_slave_transaction_t* *trans_desc, TickType_t ticks_to_wait)

Queue a SPI transaction for execution.

Queues a SPI transaction to be executed by this slave device. (The transaction queue size was specified when the slave device was initialised via spi_slave_initialize.) This function may block if the queue is full (depending on the ticks_to_wait parameter). No SPI operation is directly initiated by this function, the next queued transaction will happen when the master initiates a SPI transaction by pulling down CS and sending out clock signals.

This function hands over ownership of the buffers in `trans_desc` to the SPI slave driver; the application is not to access this memory until `spi_slave_queue_trans` is called to hand ownership back to the application.

Parameters

- **host** –SPI peripheral that is acting as a slave
- **trans_desc** –Description of transaction to execute. Not const because we may want to write status back into the transaction description.
- **ticks_to_wait** –Ticks to wait until there' s room in the queue; use portMAX_DELAY to never time out.

Returns

- ESP_ERR_INVALID_ARG if parameter is invalid
- ESP_OK on success

esp_err_t **spi_slave_get_trans_result**(*spi_host_device_t* host, *spi_slave_transaction_t* **trans_desc, TickType_t ticks_to_wait)

Get the result of a SPI transaction queued earlier.

This routine will wait until a transaction to the given device (queued earlier with spi_slave_queue_trans) has succesfully completed. It will then return the description of the completed transaction so software can inspect the result and e.g. free the memory or re-use the buffers.

It is mandatory to eventually use this function for any transaction queued by `spi_slave_queue_trans`.

Parameters

- **host** –SPI peripheral to that is acting as a slave
- **trans_desc** –**[out]** Pointer to variable able to contain a pointer to the description of the transaction that is executed

- **ticks_to_wait** –Ticks to wait until there's a returned item; use portMAX_DELAY to never time out.

Returns

- ESP_ERR_INVALID_ARG if parameter is invalid
- ESP_OK on success

esp_err_t **spi_slave_transmit**(*spi_host_device_t* host, *spi_slave_transaction_t* *trans_desc, TickType_t ticks_to_wait)

Do a SPI transaction.

Essentially does the same as spi_slave_queue_trans followed by spi_slave_get_trans_result. Do not use this when there is still a transaction queued that hasn't been finalized using spi_slave_get_trans_result.

Parameters

- **host** –SPI peripheral to that is acting as a slave
- **trans_desc** –Pointer to variable able to contain a pointer to the description of the transaction that is executed. Not const because we may want to write status back into the transaction description.
- **ticks_to_wait** –Ticks to wait until there's a returned item; use portMAX_DELAY to never time out.

Returns

- ESP_ERR_INVALID_ARG if parameter is invalid
- ESP_OK on success

Structures

struct **spi_slave_interface_config_t**

This is a configuration for a SPI host acting as a slave device.

Public Members

int **spics_io_num**

CS GPIO pin for this device.

uint32_t **flags**

Bitwise OR of SPI_SLAVE_* flags.

int **queue_size**

Transaction queue size. This sets how many transactions can be 'in the air' (queued using spi_slave_queue_trans but not yet finished using spi_slave_get_trans_result) at the same time.

uint8_t **mode**

SPI mode, representing a pair of (CPOL, CPHA) configuration:

- 0: (0, 0)
- 1: (0, 1)
- 2: (1, 0)
- 3: (1, 1)

slave_transaction_cb_t **post_setup_cb**

Callback called after the SPI registers are loaded with new data.

This callback is called within interrupt context should be in IRAM for best performance, see "Transferring Speed" section in the SPI Master documentation for full details. If not, the callback may crash during flash operation when the driver is initialized with ESP_INTR_FLAG_IRAM.

slave_transaction_cb_t **post_trans_cb**

Callback called after a transaction is done.

This callback is called within interrupt context should be in IRAM for best performance, see "Transferring Speed" section in the SPI Master documentation for full details. If not, the callback may crash during flash operation when the driver is initialized with ESP_INTR_FLAG_IRAM.

struct **spi_slave_transaction_t**

This structure describes one SPI transaction

Public Members

size_t **length**

Total data length, in bits.

size_t **trans_len**

Transaction data length, in bits.

const void ***tx_buffer**

Pointer to transmit buffer, or NULL for no MOSI phase.

void ***rx_buffer**

Pointer to receive buffer, or NULL for no MISO phase. When the DMA is anabled, must start at WORD boundary (`rx_buffer%4==0`), and has length of a multiple of 4 bytes.

void ***user**

User-defined variable. Can be used to store eg transaction ID.

Macros

SPI_SLAVE_TXBIT_LSBFIRST

Transmit command/address/data LSB first instead of the default MSB first.

SPI_SLAVE_RXBIT_LSBFIRST

Receive data LSB first instead of the default MSB first.

SPI_SLAVE_BIT_LSBFIRST

Transmit and receive LSB first.

Type Definitions

typedef struct *spi_slave_transaction_t* **spi_slave_transaction_t**

typedef void (***slave_transaction_cb_t**)(*spi_slave_transaction_t* *trans)

2.3.19 ESP32-WROOM-32SE (Secure Element)

Overview

The ESP32-WROOM-32SE has integrated Microchip's ATECC608A cryptoauth chip in the module. ATECC608A is secure element which would generate and store ECC private key in the hardware.The ECC private key can be used

to enhance security to connect to IoT cloud services with use of X.509 based mutual authentication. The application example demonstrates ECDSA sign and verify functions using ECC private key stored in ATECC608A

Application Example

Secure Element ECDSA Sign/Verify example: peripherals/secure_element/atecc608_ecdsa.

How to configure and provision ESP32-WROOM-32SE for TLS

To configure and provision ATECC608A chip on ESP32-WROOM-32SE please visit esp_cryptoauth_utility

How to use ATECC608A of ESP32-WROOM-32SE for TLS

ATECC608A can be used for TLS connections using ESP-TLS. To configure ESP-TLS for using secure element please refer *ATECC608A with ESP-TLS* in *ESP-TLS documentation.*

2.3.20 Touch Sensor

Introduction

A touch sensor system is built on a substrate which carries electrodes and relevant connections under a protective flat surface. When a user touches the surface, the capacitance variation is used to evaluate if the touch was valid.

Touch sensor on ESP32 can support up to 10 capacitive touch pads / GPIOs.

The sensing pads can be arranged in different combinations (e.g., matrix, slider), so that a larger area or more points can be detected. The touch pad sensing process is under the control of a hardware-implemented finite-state machine (FSM) which is initiated by software or a dedicated hardware timer.

For design, operation, and control registers of a touch sensor, see *ESP32 Technical Reference Manual > On-Chip Sensors and Analog Signal Processing* [PDF].

In-depth design details of touch sensors and firmware development guidelines for ESP32 are available in Touch Sensor Application Note.

For more information about testing touch sensors in various configurations, please check the Guide for ESP32-Sense-Kit.

Functionality Overview

Description of API is broken down into groups of functions to provide a quick overview of the following features:

- Initialization of touch pad driver
- Configuration of touch pad GPIO pins
- Taking measurements
- Adjusting parameters of measurements
- Filtering measurements
- Touch detection methods
- Setting up interrupts to report touch detection
- Waking up from Sleep mode on interrupt

For detailed description of a particular function, please go to Section *API Reference*. Practical implementation of this API is covered in Section *Application Examples*.

Initialization Before using a touch pad, you need to initialize the touch pad driver by calling the function `touch_pad_init()`. This function sets several `..._DEFAULT` driver parameters listed in *API Reference* under *Macros*. It also removes the information about which pads have been touched before, if any, and disables interrupts.

If the driver is not required anymore, deinitialize it by calling `touch_pad_deinit()`.

Configuration Enabling the touch sensor functionality for a particular GPIO is done with `touch_pad_config()`.

Use the function `touch_pad_set_fsm_mode()` to select if touch pad measurement (operated by FSM) should be started automatically by a hardware timer, or by software. If software mode is selected, use `touch_pad_sw_start()` to start the FSM.

Touch State Measurements The following two functions come in handy to read raw or filtered measurements from the sensor:

- `touch_pad_read_raw_data()`
- `touch_pad_read_filtered()`

They can also be used, for example, to evaluate a particular touch pad design by checking the range of sensor readings when a pad is touched or released. This information can be then used to establish a touch threshold.

Note: Before using `touch_pad_read_filtered()`, you need to initialize and configure the filter by calling specific filter functions described in Section *Filtering of Measurements*.

For the demonstration of how to read the touch pad data, check the application example peripherals/touch_sensor/touch_sensor_v1/touch_pad_read.

Optimization of Measurements A touch sensor has several configurable parameters to match the characteristics of a particular touch pad design. For instance, to sense smaller capacity changes, it is possible to narrow down the reference voltage range within which the touch pads are charged / discharged. The high and low reference voltages are set using the function `touch_pad_set_voltage()`.

Besides the ability to discern smaller capacity changes, a positive side effect is reduction of power consumption for low power applications. A likely negative effect is an increase in measurement noise. If the dynamic range of obtained readings is still satisfactory, then further reduction of power consumption might be done by reducing the measurement time with `touch_pad_set_meas_time()`.

The following list summarizes available measurement parameters and corresponding 'set' functions:

- Touch pad charge / discharge parameters:
  - voltage range: `touch_pad_set_voltage()`
  - speed (slope): `touch_pad_set_cnt_mode()`
- Measurement time: `touch_pad_set_meas_time()`

Relationship between the voltage range (high / low reference voltages), speed (slope), and measurement time is shown in the figure below.

The last chart *Output* represents the touch sensor reading, i.e., the count of pulses collected within the measurement time.

All functions are provided in pairs to *set* a specific parameter and to *get* the current parameter's value, e.g., `touch_pad_set_voltage()` and `touch_pad_get_voltage()`.

Filtering of Measurements If measurements are noisy, you can filter them with provided API functions. Before using the filter, please start it by calling `touch_pad_filter_start()`.

The filter type is IIR (infinite impulse response), and it has a configurable period that can be set with the function `touch_pad_set_filter_period()`.

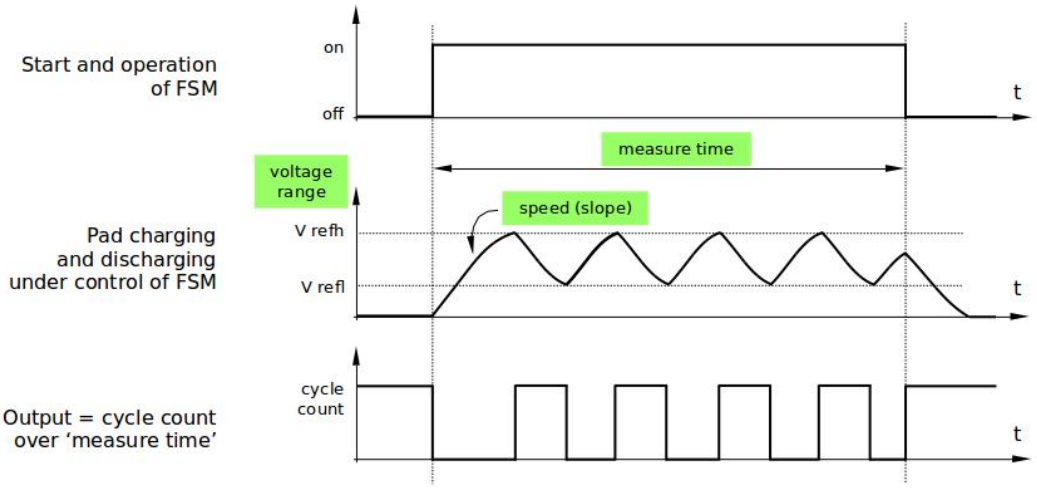

Fig. 20: Touch pad - relationship between measurement parameters

You can stop the filter with `touch_pad_filter_stop()`. If not required anymore, the filter can be deleted by invoking `touch_pad_filter_delete()`.

Touch Detection Touch detection is implemented in ESP32's hardware based on the user-configured threshold and raw measurements executed by FSM. Use the functions `touch_pad_get_status()` to check which pads have been touched and `touch_pad_clear_status()` to clear the touch status information.

Hardware touch detection can also be wired to interrupts. This is described in the next section.

If measurements are noisy and capacity changes are small, hardware touch detection might be unreliable. To resolve this issue, instead of using hardware detection / provided interrupts, implement measurement filtering and perform touch detection in your own application. For sample implementation of both methods of touch detection, see peripherals/touch_sensor/touch_sensor_v1/touch_pad_interrupt.

Touch Triggered Interrupts Before enabling an interrupt on a touch detection, you should establish a touch detection threshold. Use the functions described in *Touch State Measurements* to read and display sensor measurements when a pad is touched and released. Apply a filter if measurements are noisy and relative capacity changes are small. Depending on your application and environment conditions, test the influence of temperature and power supply voltage changes on measured values.

Once a detection threshold is established, it can be set during initialization with `touch_pad_config()` or at the runtime with `touch_pad_set_thresh()`.

In the next step, configure how interrupts are triggered. They can be triggered below or above the threshold, which is set with the function `touch_pad_set_trigger_mode()`.

Finally, configure and manage interrupt calls using the following functions:

- `touch_pad_isr_register()` / `touch_pad_isr_deregister()`
- `touch_pad_intr_enable()` / `touch_pad_intr_disable()`

When interrupts are operational, you can obtain the information from which particular pad an interrupt came by invoking `touch_pad_get_status()` and clear the pad status with `touch_pad_clear_status()`.

Note: Interrupts on touch detection operate on raw / unfiltered measurements checked against user established threshold and are implemented in hardware. Enabling the software filtering API (see *Filtering of Measurements*) does

not affect this process.

Wakeup from Sleep Mode If touch pad interrupts are used to wake up the chip from a sleep mode, you can select a certain configuration of pads (SET1 or both SET1 and SET2) that should be touched to trigger the interrupt and cause the subsequent wakeup. To do so, use the function `touch_pad_set_trigger_source()`.

Configuration of required bit patterns of pads may be managed for each 'SET' with:

- `touch_pad_set_group_mask()` / `touch_pad_get_group_mask()`
- `touch_pad_clear_group_mask()`

Application Examples

- Touch sensor read example: peripherals/touch_sensor/touch_sensor_v1/touch_pad_read.
- Touch sensor interrupt example: peripherals/touch_sensor/touch_sensor_v1/touch_pad_interrupt.

API Reference

Header File

- components/driver/esp32/include/driver/touch_sensor.h

Functions

esp_err_t **touch_pad_config**(*touch_pad_t* touch_num, uint16_t threshold)

Configure touch pad interrupt threshold.

Note: If FSM mode is set to TOUCH_FSM_MODE_TIMER, this function will be blocked for one measurement cycle and wait for data to be valid.

Parameters

- **touch_num** –touch pad index
- **threshold** –interrupt threshold,

Returns

- ESP_OK Success
- ESP_ERR_INVALID_ARG if argument wrong
- ESP_FAIL if touch pad not initialized

esp_err_t **touch_pad_read**(*touch_pad_t* touch_num, uint16_t *touch_value)

get touch sensor counter value. Each touch sensor has a counter to count the number of charge/discharge cycles. When the pad is not 'touched', we can get a number of the counter. When the pad is 'touched', the value in counter will get smaller because of the larger equivalent capacitance.

Note: This API requests hardware measurement once. If IIR filter mode is enabled, please use 'touch_pad_read_raw_data' interface instead.

Parameters

- **touch_num** –touch pad index
- **touch_value** –pointer to accept touch sensor value

Returns

- ESP_OK Success
- ESP_ERR_INVALID_ARG Touch pad parameter error
- ESP_ERR_INVALID_STATE This touch pad hardware connection is error, the value of "touch_value" is 0.

- ESP_FAIL Touch pad not initialized

esp_err_t **touch_pad_read_filtered**(*touch_pad_t* touch_num, uint16_t *touch_value)

get filtered touch sensor counter value by IIR filter.

Note: touch_pad_filter_start has to be called before calling touch_pad_read_filtered. This function can be called from ISR

Parameters
- **touch_num** –touch pad index
- **touch_value** –pointer to accept touch sensor value

Returns
- ESP_OK Success
- ESP_ERR_INVALID_ARG Touch pad parameter error
- ESP_ERR_INVALID_STATE This touch pad hardware connection is error, the value of "touch_value" is 0.
- ESP_FAIL Touch pad not initialized

esp_err_t **touch_pad_read_raw_data**(*touch_pad_t* touch_num, uint16_t *touch_value)

get raw data (touch sensor counter value) from IIR filter process. Need not request hardware measurements.

Note: touch_pad_filter_start has to be called before calling touch_pad_read_raw_data. This function can be called from ISR

Parameters
- **touch_num** –touch pad index
- **touch_value** –pointer to accept touch sensor value

Returns
- ESP_OK Success
- ESP_ERR_INVALID_ARG Touch pad parameter error
- ESP_ERR_INVALID_STATE This touch pad hardware connection is error, the value of "touch_value" is 0.
- ESP_FAIL Touch pad not initialized

esp_err_t **touch_pad_set_filter_read_cb**(*filter_cb_t* read_cb)

Register the callback function that is called after each IIR filter calculation.

Note: The 'read_cb' callback is called in timer task in each filtering cycle.

Parameters **read_cb** –Pointer to filtered callback function. If the argument passed in is NULL, the callback will stop.

Returns
- ESP_OK Success
- ESP_ERR_INVALID_ARG set error

esp_err_t **touch_pad_isr_register**(*intr_handler_t* fn, void *arg)

Register touch-pad ISR. The handler will be attached to the same CPU core that this function is running on.

Parameters
- **fn** –Pointer to ISR handler
- **arg** –Parameter for ISR

Returns
- ESP_OK Success ;

- ESP_ERR_INVALID_ARG GPIO error
- ESP_ERR_NO_MEM No memory

esp_err_t **touch_pad_set_meas_time**(uint16_t sleep_cycle, uint16_t meas_cycle)

Set touch sensor measurement and sleep time. Excessive total time will slow down the touch response. Too small measurement time will not be sampled enough, resulting in inaccurate measurements.

Note: The touch sensor on ESP32 will fix measuring cycles (specified by the second parameter) and then record the count of charge and discharge cycles during the sensing period as the raw value. That means the raw value will decrease as the capacity of the touch pad increasing.

Note: The greater the duty cycle of the measurement time, the more system power is consumed.

Parameters

- **sleep_cycle** –The touch sensor will sleep after each measurement. sleep_cycle decide the interval between each measurement. t_sleep = sleep_cycle / (RTC_SLOW_CLK frequency). The approximate frequency value of RTC_SLOW_CLK can be obtained using rtc_clk_slow_freq_get_hz function.
- **meas_cycle** –The duration of the touch sensor measurement. t_meas = meas_cycle / 8M, the maximum measure time is 0xffff / 8M = 8.19 ms

Returns

- ESP_OK on success

esp_err_t **touch_pad_get_meas_time**(uint16_t *sleep_cycle, uint16_t *meas_cycle)

Get touch sensor measurement and sleep time.

Parameters

- **sleep_cycle** –Pointer to accept sleep cycle number
- **meas_cycle** –Pointer to accept measurement cycle count.

Returns

- ESP_OK on success

esp_err_t **touch_pad_sw_start**(void)

Trigger a touch sensor measurement, only support in SW mode of FSM.

Returns

- ESP_OK on success

esp_err_t **touch_pad_set_thresh**(*touch_pad_t* touch_num, uint16_t threshold)

Set touch sensor interrupt threshold.

Parameters

- **touch_num** –touch pad index
- **threshold** –threshold of touchpad count, refer to touch_pad_set_trigger_mode to see how to set trigger mode.

Returns

- ESP_OK on success
- ESP_ERR_INVALID_ARG if argument is wrong

esp_err_t **touch_pad_get_thresh**(*touch_pad_t* touch_num, uint16_t *threshold)

Get touch sensor interrupt threshold.

Parameters

- **touch_num** –touch pad index
- **threshold** –pointer to accept threshold

Returns

- ESP_OK on success
- ESP_ERR_INVALID_ARG if argument is wrong

esp_err_t **touch_pad_set_trigger_mode**(*touch_trigger_mode_t* mode)

Set touch sensor interrupt trigger mode. Interrupt can be triggered either when counter result is less than threshold or when counter result is more than threshold.

Parameters **mode** –touch sensor interrupt trigger mode

Returns

- ESP_OK on success
- ESP_ERR_INVALID_ARG if argument is wrong

esp_err_t **touch_pad_get_trigger_mode**(*touch_trigger_mode_t* *mode)

Get touch sensor interrupt trigger mode.

Parameters **mode** –pointer to accept touch sensor interrupt trigger mode

Returns

- ESP_OK on success

esp_err_t **touch_pad_set_trigger_source**(*touch_trigger_src_t* src)

Set touch sensor interrupt trigger source. There are two sets of touch signals. Set1 and set2 can be mapped to several touch signals. Either set will be triggered if at least one of its touch signal is ‘touched’. The interrupt can be configured to be generated if set1 is triggered, or only if both sets are triggered.

Parameters **src** –touch sensor interrupt trigger source

Returns

- ESP_OK on success
- ESP_ERR_INVALID_ARG if argument is wrong

esp_err_t **touch_pad_get_trigger_source**(*touch_trigger_src_t* *src)

Get touch sensor interrupt trigger source.

Parameters **src** –pointer to accept touch sensor interrupt trigger source

Returns

- ESP_OK on success

esp_err_t **touch_pad_set_group_mask**(uint16_t set1_mask, uint16_t set2_mask, uint16_t en_mask)

Set touch sensor group mask. Touch pad module has two sets of signals, ‘Touched’ signal is triggered only if at least one of touch pad in this group is “touched”. This function will set the register bits according to the given bitmask.

Parameters

- **set1_mask** –bitmask of touch sensor signal group1, it’s a 10-bit value
- **set2_mask** –bitmask of touch sensor signal group2, it’s a 10-bit value
- **en_mask** –bitmask of touch sensor work enable, it’s a 10-bit value

Returns

- ESP_OK on success
- ESP_ERR_INVALID_ARG if argument is wrong

esp_err_t **touch_pad_get_group_mask**(uint16_t *set1_mask, uint16_t *set2_mask, uint16_t *en_mask)

Get touch sensor group mask.

Parameters

- **set1_mask** –pointer to accept bitmask of touch sensor signal group1, it’s a 10-bit value
- **set2_mask** –pointer to accept bitmask of touch sensor signal group2, it’s a 10-bit value
- **en_mask** –pointer to accept bitmask of touch sensor work enable, it’s a 10-bit value

Returns

- ESP_OK on success

esp_err_t **touch_pad_clear_group_mask**(uint16_t set1_mask, uint16_t set2_mask, uint16_t en_mask)

Clear touch sensor group mask. Touch pad module has two sets of signals, Interrupt is triggered only if at least one of touch pad in this group is “touched”. This function will clear the register bits according to the given bitmask.

Parameters

- **set1_mask** –bitmask touch sensor signal group1, it’s a 10-bit value

- **set2_mask** –bitmask touch sensor signal group2, it’ s a 10-bit value
- **en_mask** –bitmask of touch sensor work enable, it’ s a 10-bit value

Returns

- ESP_OK on success
- ESP_ERR_INVALID_ARG if argument is wrong

esp_err_t **touch_pad_intr_enable**(void)

To enable touch pad interrupt.

Returns

- ESP_OK on success

esp_err_t **touch_pad_intr_disable**(void)

To disable touch pad interrupt.

Returns

- ESP_OK on success

esp_err_t **touch_pad_intr_clear**(void)

To clear touch pad interrupt.

Returns

- ESP_OK on success

esp_err_t **touch_pad_set_filter_period**(uint32_t new_period_ms)

set touch pad filter calibration period, in ms. Need to call touch_pad_filter_start before all touch filter APIs

Parameters **new_period_ms** –filter period, in ms

Returns

- ESP_OK Success
- ESP_ERR_INVALID_STATE driver state error
- ESP_ERR_INVALID_ARG parameter error

esp_err_t **touch_pad_get_filter_period**(uint32_t *p_period_ms)

get touch pad filter calibration period, in ms Need to call touch_pad_filter_start before all touch filter APIs

Parameters **p_period_ms** –pointer to accept period

Returns

- ESP_OK Success
- ESP_ERR_INVALID_STATE driver state error
- ESP_ERR_INVALID_ARG parameter error

esp_err_t **touch_pad_filter_start**(uint32_t filter_period_ms)

start touch pad filter function This API will start a filter to process the noise in order to prevent false triggering when detecting slight change of capacitance. Need to call touch_pad_filter_start before all touch filter APIs

---

Note: This filter uses FreeRTOS timer, which is dispatched from a task with priority 1 by default on CPU 0. So if some application task with higher priority takes a lot of CPU0 time, then the quality of data obtained from this filter will be affected. You can adjust FreeRTOS timer task priority in menuconfig.

Parameters **filter_period_ms** –filter calibration period, in ms

Returns

- ESP_OK Success
- ESP_ERR_INVALID_ARG parameter error
- ESP_ERR_NO_MEM No memory for driver
- ESP_ERR_INVALID_STATE driver state error

esp_err_t **touch_pad_filter_stop**(void)

stop touch pad filter function Need to call touch_pad_filter_start before all touch filter APIs

Returns

- ESP_OK Success
- ESP_ERR_INVALID_STATE driver state error

esp_err_t **touch_pad_filter_delete**(void)

delete touch pad filter driver and release the memory Need to call touch_pad_filter_start before all touch filter APIs

Returns
- ESP_OK Success
- ESP_ERR_INVALID_STATE driver state error

Type Definitions

typedef void (***filter_cb_t**)(uint16_t *raw_value, uint16_t *filtered_value)

Callback function that is called after each IIR filter calculation.

Note: This callback is called in timer task in each filtering cycle.

Note: This callback should not be blocked.

Param raw_value The latest raw data(touch sensor counter value) that points to all channels(raw_value[0..TOUCH_PAD_MAX-1]).

Param filtered_value The latest IIR filtered data(calculated from raw data) that points to all channels(filtered_value[0..TOUCH_PAD_MAX-1]).

Header File

- components/driver/include/driver/touch_sensor_common.h

Functions

esp_err_t **touch_pad_init**(void)

Initialize touch module.

Note: If default parameter don't match the usage scenario, it can be changed after this function.

Returns
- ESP_OK Success
- ESP_ERR_NO_MEM Touch pad init error
- ESP_ERR_NOT_SUPPORTED Touch pad is providing current to external XTAL

esp_err_t **touch_pad_deinit**(void)

Un-install touch pad driver.

Note: After this function is called, other touch functions are prohibited from being called.

Returns
- ESP_OK Success
- ESP_FAIL Touch pad driver not initialized

esp_err_t **touch_pad_io_init**(*touch_pad_t* touch_num)

Initialize touch pad GPIO.

Parameters **touch_num** –touch pad index

Returns

- ESP_OK on success
- ESP_ERR_INVALID_ARG if argument is wrong

esp_err_t **touch_pad_set_voltage**(*touch_high_volt_t* refh, *touch_low_volt_t* refl, *touch_volt_atten_t* atten)

Set touch sensor high voltage threshold of chanrge. The touch sensor measures the channel capacitance value by charging and discharging the channel. So the high threshold should be less than the supply voltage.

Parameters

- **refh** –the value of DREFH
- **refl** –the value of DREFL
- **atten** –the attenuation on DREFH

Returns

- ESP_OK on success
- ESP_ERR_INVALID_ARG if argument is wrong

esp_err_t **touch_pad_get_voltage**(*touch_high_volt_t* *refh, *touch_low_volt_t* *refl, *touch_volt_atten_t* *atten)

Get touch sensor reference voltage,.

Parameters

- **refh** –pointer to accept DREFH value
- **refl** –pointer to accept DREFL value
- **atten** –pointer to accept the attenuation on DREFH

Returns

- ESP_OK on success

esp_err_t **touch_pad_set_cnt_mode**(*touch_pad_t* touch_num, *touch_cnt_slope_t* slope, *touch_tie_opt_t* opt)

Set touch sensor charge/discharge speed for each pad. If the slope is 0, the counter would always be zero. If the slope is 1, the charging and discharging would be slow, accordingly. If the slope is set 7, which is the maximum value, the charging and discharging would be fast.

Note: The higher the charge and discharge current, the greater the immunity of the touch channel, but it will increase the system power consumption.

Parameters

- **touch_num** –touch pad index
- **slope** –touch pad charge/discharge speed
- **opt** –the initial voltage

Returns

- ESP_OK on success
- ESP_ERR_INVALID_ARG if argument is wrong

esp_err_t **touch_pad_get_cnt_mode**(*touch_pad_t* touch_num, *touch_cnt_slope_t* *slope, *touch_tie_opt_t* *opt)

Get touch sensor charge/discharge speed for each pad.

Parameters

- **touch_num** –touch pad index
- **slope** –pointer to accept touch pad charge/discharge slope
- **opt** –pointer to accept the initial voltage

Returns

- ESP_OK on success
- ESP_ERR_INVALID_ARG if argument is wrong

esp_err_t **touch_pad_isr_deregister**(void (*fn)(void*), void *arg)

Deregister the handler previously registered using touch_pad_isr_handler_register.

Parameters
- **fn** –handler function to call (as passed to touch_pad_isr_handler_register)
- **arg** –argument of the handler (as passed to touch_pad_isr_handler_register)

Returns
- ESP_OK on success
- ESP_ERR_INVALID_STATE if a handler matching both fn and arg isn't registered

esp_err_t **touch_pad_get_wakeup_status**(*touch_pad_t* *pad_num)

Get the touch pad which caused wakeup from deep sleep.

Parameters **pad_num** –pointer to touch pad which caused wakeup

Returns
- ESP_OK Success
- ESP_ERR_INVALID_ARG parameter is NULL

esp_err_t **touch_pad_set_fsm_mode**(*touch_fsm_mode_t* mode)

Set touch sensor FSM mode, the test action can be triggered by the timer, as well as by the software.

Parameters **mode** –FSM mode

Returns
- ESP_OK on success
- ESP_ERR_INVALID_ARG if argument is wrong

esp_err_t **touch_pad_get_fsm_mode**(*touch_fsm_mode_t* *mode)

Get touch sensor FSM mode.

Parameters **mode** –pointer to accept FSM mode

Returns
- ESP_OK on success

esp_err_t **touch_pad_clear_status**(void)

To clear the touch sensor channel active status.

Note: The FSM automatically updates the touch sensor status. It is generally not necessary to call this API to clear the status.

Returns
- ESP_OK on success

uint32_t **touch_pad_get_status**(void)

Get the touch sensor channel active status mask. The bit position represents the channel number. The 0/1 status of the bit represents the trigger status.

Returns
- The touch sensor status. e.g. Touch1 trigger status is `status_mask & (BIT1)`.

bool **touch_pad_meas_is_done**(void)

Check touch sensor measurement status.

Returns
- True measurement is under way
- False measurement done

GPIO Lookup Macros Some useful macros can be used to specified the GPIO number of a touch pad channel, or vice versa. e.g.

1. `TOUCH_PAD_NUM5_GPIO_NUM` is the GPIO number of channel 5 (12);
2. `TOUCH_PAD_GPIO4_CHANNEL` is the channel number of GPIO 4 (channel 0).

Header File

- components/soc/esp32/include/soc/touch_sensor_channel.h

Macros

TOUCH_PAD_GPIO4_CHANNEL

TOUCH_PAD_NUM0_GPIO_NUM

TOUCH_PAD_GPIO0_CHANNEL

TOUCH_PAD_NUM1_GPIO_NUM

TOUCH_PAD_GPIO2_CHANNEL

TOUCH_PAD_NUM2_GPIO_NUM

TOUCH_PAD_GPIO15_CHANNEL

TOUCH_PAD_NUM3_GPIO_NUM

TOUCH_PAD_GPIO13_CHANNEL

TOUCH_PAD_NUM4_GPIO_NUM

TOUCH_PAD_GPIO12_CHANNEL

TOUCH_PAD_NUM5_GPIO_NUM

TOUCH_PAD_GPIO14_CHANNEL

TOUCH_PAD_NUM6_GPIO_NUM

TOUCH_PAD_GPIO27_CHANNEL

TOUCH_PAD_NUM7_GPIO_NUM

TOUCH_PAD_GPIO33_CHANNEL

TOUCH_PAD_NUM8_GPIO_NUM

TOUCH_PAD_GPIO32_CHANNEL

TOUCH_PAD_NUM9_GPIO_NUM

Header File

- components/hal/include/hal/touch_sensor_types.h

Macros

TOUCH_PAD_BIT_MASK_ALL

TOUCH_PAD_SLOPE_DEFAULT

TOUCH_PAD_TIE_OPT_DEFAULT

TOUCH_PAD_BIT_MASK_MAX

TOUCH_PAD_HIGH_VOLTAGE_THRESHOLD

TOUCH_PAD_LOW_VOLTAGE_THRESHOLD

TOUCH_PAD_ATTEN_VOLTAGE_THRESHOLD

TOUCH_PAD_IDLE_CH_CONNECT_DEFAULT

TOUCH_PAD_THRESHOLD_MAX

If set touch threshold max value, The touch sensor can’ t be in touched status

TOUCH_PAD_SLEEP_CYCLE_DEFAULT

The timer frequency is RTC_SLOW_CLK (can be 150k or 32k depending on the options), max value is 0xffff

TOUCH_PAD_MEASURE_CYCLE_DEFAULT

The timer frequency is 8Mhz, the max value is 0x7fff

TOUCH_FSM_MODE_DEFAULT

The touch FSM my be started by the software or timer

TOUCH_TRIGGER_MODE_DEFAULT

Interrupts can be triggered if sensor value gets below or above threshold

TOUCH_TRIGGER_SOURCE_DEFAULT

The wakeup trigger source can be SET1 or both SET1 and SET2

Enumerations

enum **touch_pad_t**

Touch pad channel

Values:

enumerator **TOUCH_PAD_NUM0**

Touch pad channel 0 is GPIO4(ESP32)

enumerator **TOUCH_PAD_NUM1**

Touch pad channel 1 is GPIO0(ESP32) / GPIO1(ESP32-S2)

enumerator **TOUCH_PAD_NUM2**

Touch pad channel 2 is GPIO2(ESP32) / GPIO2(ESP32-S2)

enumerator **TOUCH_PAD_NUM3**

Touch pad channel 3 is GPIO15(ESP32) / GPIO3(ESP32-S2)

enumerator **TOUCH_PAD_NUM4**

Touch pad channel 4 is GPIO13(ESP32) / GPIO4(ESP32-S2)

enumerator **TOUCH_PAD_NUM5**

Touch pad channel 5 is GPIO12(ESP32) / GPIO5(ESP32-S2)

enumerator **TOUCH_PAD_NUM6**

Touch pad channel 6 is GPIO14(ESP32) / GPIO6(ESP32-S2)

enumerator **TOUCH_PAD_NUM7**

Touch pad channel 7 is GPIO27(ESP32) / GPIO7(ESP32-S2)

enumerator **TOUCH_PAD_NUM8**

Touch pad channel 8 is GPIO33(ESP32) / GPIO8(ESP32-S2)

enumerator **TOUCH_PAD_NUM9**

Touch pad channel 9 is GPIO32(ESP32) / GPIO9(ESP32-S2)

enumerator **TOUCH_PAD_MAX**

enum **touch_high_volt_t**

Touch sensor high reference voltage

Values:

enumerator **TOUCH_HVOLT_KEEP**

Touch sensor high reference voltage, no change

enumerator **TOUCH_HVOLT_2V4**

Touch sensor high reference voltage, 2.4V

enumerator **TOUCH_HVOLT_2V5**

Touch sensor high reference voltage, 2.5V

enumerator **TOUCH_HVOLT_2V6**

Touch sensor high reference voltage, 2.6V

enumerator **TOUCH_HVOLT_2V7**

Touch sensor high reference voltage, 2.7V

enumerator **TOUCH_HVOLT_MAX**

enum **touch_low_volt_t**

Touch sensor low reference voltage

Values:

enumerator **TOUCH_LVOLT_KEEP**

Touch sensor low reference voltage, no change

enumerator **TOUCH_LVOLT_0V5**

Touch sensor low reference voltage, 0.5V

enumerator **TOUCH_LVOLT_0V6**

Touch sensor low reference voltage, 0.6V

enumerator **TOUCH_LVOLT_0V7**

Touch sensor low reference voltage, 0.7V

enumerator **TOUCH_LVOLT_0V8**

Touch sensor low reference voltage, 0.8V

enumerator **TOUCH_LVOLT_MAX**

enum **touch_volt_atten_t**

Touch sensor high reference voltage attenuation

Values:

enumerator **TOUCH_HVOLT_ATTEN_KEEP**

Touch sensor high reference voltage attenuation, no change

enumerator **TOUCH_HVOLT_ATTEN_1V5**

Touch sensor high reference voltage attenuation, 1.5V attenuation

enumerator **TOUCH_HVOLT_ATTEN_1V**

Touch sensor high reference voltage attenuation, 1.0V attenuation

enumerator **TOUCH_HVOLT_ATTEN_0V5**

Touch sensor high reference voltage attenuation, 0.5V attenuation

enumerator **TOUCH_HVOLT_ATTEN_0V**

Touch sensor high reference voltage attenuation, 0V attenuation

enumerator **TOUCH_HVOLT_ATTEN_MAX**

enum **touch_cnt_slope_t**

Touch sensor charge/discharge speed

Values:

enumerator **TOUCH_PAD_SLOPE_0**

Touch sensor charge / discharge speed, always zero

enumerator **TOUCH_PAD_SLOPE_1**

Touch sensor charge / discharge speed, slowest

enumerator **TOUCH_PAD_SLOPE_2**

Touch sensor charge / discharge speed

enumerator **TOUCH_PAD_SLOPE_3**

Touch sensor charge / discharge speed

enumerator **TOUCH_PAD_SLOPE_4**

Touch sensor charge / discharge speed

enumerator **TOUCH_PAD_SLOPE_5**

Touch sensor charge / discharge speed

enumerator **TOUCH_PAD_SLOPE_6**

Touch sensor charge / discharge speed

enumerator **TOUCH_PAD_SLOPE_7**

Touch sensor charge / discharge speed, fast

enumerator **TOUCH_PAD_SLOPE_MAX**

enum **touch_tie_opt_t**

Touch sensor initial charge level

Values:

enumerator **TOUCH_PAD_TIE_OPT_LOW**

Initial level of charging voltage, low level

enumerator **TOUCH_PAD_TIE_OPT_HIGH**

Initial level of charging voltage, high level

enumerator **TOUCH_PAD_TIE_OPT_MAX**

enum **touch_fsm_mode_t**

Touch sensor FSM mode

Values:

enumerator **TOUCH_FSM_MODE_TIMER**

To start touch FSM by timer

enumerator **TOUCH_FSM_MODE_SW**

To start touch FSM by software trigger

enumerator **TOUCH_FSM_MODE_MAX**

enum **touch_trigger_mode_t**

Values:

enumerator **TOUCH_TRIGGER_BELOW**

Touch interrupt will happen if counter value is less than threshold.

enumerator **TOUCH_TRIGGER_ABOVE**

Touch interrupt will happen if counter value is larger than threshold.

enumerator **TOUCH_TRIGGER_MAX**

enum **touch_trigger_src_t**

Values:

enumerator **TOUCH_TRIGGER_SOURCE_BOTH**

wakeup interrupt is generated if both SET1 and SET2 are "touched"

enumerator **TOUCH_TRIGGER_SOURCE_SET1**

wakeup interrupt is generated if SET1 is "touched"

enumerator **TOUCH_TRIGGER_SOURCE_MAX**

2.3.21 Two-Wire Automotive Interface (TWAI)

Overview

The Two-Wire Automotive Interface (TWAI) is a real-time serial communication protocol suited for automotive and industrial applications. It is compatible with ISO11898-1 Classical frames, thus can support Standard Frame Format (11-bit ID) and Extended Frame Format (29-bit ID). The ESP32's peripherals contains a TWAI controller that can be configured to communicate on a TWAI bus via an external transceiver.

Warning: The TWAI controller is not compatible with ISO11898-1 FD Format frames, and will interpret such frames as errors.

This programming guide is split into the following sections:

1. *TWAI Protocol Summary*
2. *Signals Lines and Transceiver*
3. *Driver Configuration*
4. *Driver Operation*
5. *Examples*

TWAI Protocol Summary

The TWAI is a multi-master, multi-cast, asynchronous, serial communication protocol. TWAI also supports error detection and signalling, and inbuilt message prioritization.

Multi-master: Any node on the bus can initiate the transfer of a message.

Multi-cast: When a node transmits a message, all nodes on the bus will receive the message (i.e., broadcast) thus ensuring data consistency across all nodes. However, some nodes can selectively choose which messages to accept via the use of acceptance filtering (multi-cast).

Asynchronous: The bus does not contain a clock signal. All nodes on the bus operate at the same bit rate and synchronize using the edges of the bits transmitted on the bus.

Error Detection and Signalling: Every node will constantly monitor the bus. When any node detects an error, it will signal the detection by transmitting an error frame. Other nodes will receive the error frame and transmit their own error frames in response. This will result in an error detection being propagated to all nodes on the bus.

Message Priorities: Messages contain an ID field. If two or more nodes attempt to transmit simultaneously, the node transmitting the message with the lower ID value will win arbitration of the bus. All other nodes will become receivers ensuring that there is at most one transmitter at any time.

TWAI Messages TWAI Messages are split into Data Frames and Remote Frames. Data Frames are used to deliver a data payload to other nodes, whereas a Remote Frame is used to request a Data Frame from other nodes (other nodes can optionally respond with a Data Frame). Data and Remote Frames have two frame formats known as **Extended Frame** and **Standard Frame** which contain a 29-bit ID and an 11-bit ID respectively. A TWAI message consists of the following fields:

- 29-bit or 11-bit ID: Determines the priority of the message (lower value has higher priority).
- Data Length Code (DLC) between 0 to 8: Indicates the size (in bytes) of the data payload for a Data Frame, or the amount of data to request for a Remote Frame.
- Up to 8 bytes of data for a Data Frame (should match DLC).

Error States and Counters The TWAI protocol implements a feature known as "fault confinement" where a persistently erroneous node will eventually eliminate itself form the bus. This is implemented by requiring every node to maintain two internal error counters known as the **Transmit Error Counter (TEC)** and the **Receive Error Counter (REC)**. The two error counters are incremented and decremented according to a set of rules (where the counters increase on an error, and decrease on a successful message transmission/reception). The values of the counters are used to determine a node's **error state**, namely **Error Active**, **Error Passive**, and **Bus-Off**.

Error Active: A node is Error Active when **both TEC and REC are less than 128** and indicates that the node is operating normally. Error Active nodes are allowed to participate in bus communications, and will actively signal the detection of any errors by automatically transmitting an **Active Error Flag** over the bus.

Error Passive: A node is Error Passive when **either the TEC or REC becomes greater than or equal to 128**. Error Passive nodes are still able to take part in bus communications, but will instead transmit a **Passive Error Flag** upon detection of an error.

Bus-Off: A node becomes Bus-Off when the **TEC becomes greater than or equal to 256**. A Bus-Off node is unable influence the bus in any manner (essentially disconnected from the bus) thus eliminating itself from the bus. A node will remain in the Bus-Off state until it undergoes bus-off recovery.

Signals Lines and Transceiver

The TWAI controller does not contain a integrated transceiver. Therefore, to connect the TWAI controller to a TWAI bus, **an external transceiver is required**. The type of external transceiver used should depend on the application's physical layer specification (e.g. using SN65HVD23x transceivers for ISO 11898-2 compatibility).

The TWAI controller's interface consists of 4 signal lines known as **TX, RX, BUS-OFF, and CLKOUT**. These four signal lines can be routed through the GPIO Matrix to the ESP32's GPIO pads.

TX and RX: The TX and RX signal lines are required to interface with an external transceiver. Both signal lines represent/interpret a dominant bit as a low logic level (0V), and a recessive bit as a high logic level (3.3V).

BUS-OFF: The BUS-OFF signal line is **optional** and is set to a low logic level (0V) whenever the TWAI controller reaches a bus-off state. The BUS-OFF signal line is set to a high logic level (3.3V) otherwise.

CLKOUT: The CLKOUT signal line is **optional** and outputs a prescaled version of the controller's source clock (APB Clock).

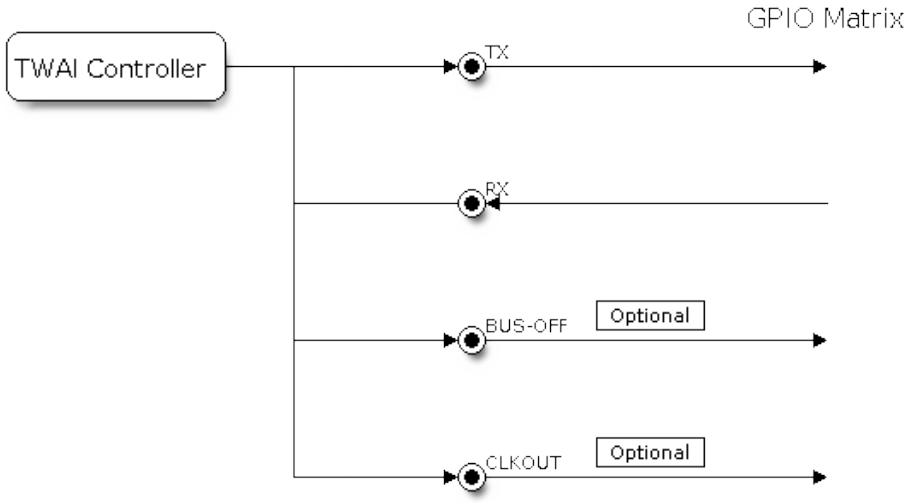

Fig. 21: Signal lines of the TWAI controller

Note: An external transceiver **must internally loopback the TX to RX** such that a change in logic level to the TX signal line can be observed on the RX line. Failing to do so will cause the TWAI controller to interpret differences in logic levels between the two signal lines as a loss in arbitration or a bit error.

Driver Configuration

This section covers how to configure the TWAI driver.

Operating Modes The TWAI driver supports the following modes of operations:

Normal Mode: The normal operating mode allows the TWAI controller to take part in bus activities such as transmitting and receiving messages/error frames. Acknowledgement from another node is required when transmitting a message.

No Ack Mode: The No Acknowledgement mode is similar to normal mode, however acknowledgements are not required for a message transmission to be considered successful. This mode is useful when self testing the TWAI controller (loopback of transmissions).

Listen Only Mode: This mode will prevent the TWAI controller from influencing the bus. Therefore, transmission of messages/acknowledgement/error frames will be disabled. However the TWAI controller will still be able to receive messages but will not acknowledge the message. This mode is suited for bus monitor applications.

Alerts The TWAI driver contains an alert feature that is used to notify the application layer of certain TWAI controller or TWAI bus events. Alerts are selectively enabled when the TWAI driver is installed, but can be reconfigured during runtime by calling `twai_reconfigure_alerts()`. The application can then wait for any enabled alerts to occur by calling `twai_read_alerts()`. The TWAI driver supports the following alerts:

Table 5: TWAI Driver Alerts

Alert Flag	Description
TWAI_ALERT_TX_IDLE	No more messages queued for transmission
TWAI_ALERT_TX_SUCCESS	The previous transmission was successful
TWAI_ALERT_RX_DATA	A frame has been received and added to the RX queue
TWAI_ALERT_BELOW_ERR_WARN	Both error counters have dropped below error warning limit
TWAI_ALERT_ERR_ACTIVE	TWAI controller has become error active
TWAI_ALERT_RECOVERY_IN_PROGRESS	TWAI controller is undergoing bus recovery
TWAI_ALERT_BUS_RECOVERED	TWAI controller has successfully completed bus recovery
TWAI_ALERT_ARB_LOST	The previous transmission lost arbitration
TWAI_ALERT_ABOVE_ERR_WARN	One of the error counters have exceeded the error warning limit
TWAI_ALERT_BUS_ERROR	A (Bit, Stuff, CRC, Form, ACK) error has occurred on the bus
TWAI_ALERT_TX_FAILED	The previous transmission has failed
TWAI_ALERT_RX_QUEUE_FULL	The RX queue is full causing a received frame to be lost
TWAI_ALERT_ERR_PASS	TWAI controller has become error passive
TWAI_ALERT_BUS_OFF	Bus-off condition occurred. TWAI controller can no longer influence bus

Note: The TWAI controller's **error warning limit** is used to preemptively warn the application of bus errors before the error passive state is reached. By default, the TWAI driver sets the **error warning limit** to **96**. The TWAI_ALERT_ABOVE_ERR_WARN is raised when the TEC or REC becomes larger then or equal to the error warning limit. The TWAI_ALERT_BELOW_ERR_WARN is raised when both TEC and REC return back to values below **96**.

Note: When enabling alerts, the TWAI_ALERT_AND_LOG flag can be used to cause the TWAI driver to log any raised alerts to UART. However, alert logging is disabled and TWAI_ALERT_AND_LOG if the *CONFIG_TWAI_ISR_IN_IRAM* option is enabled (see *Placing ISR into IRAM*).

Note: The TWAI_ALERT_ALL and TWAI_ALERT_NONE macros can also be used to enable/disable all alerts during configuration/reconfiguration.

Bit Timing The operating bit rate of the TWAI driver is configured using the *twai_timing_config_t* structure. The period of each bit is made up of multiple **time quanta**, and the period of a **time quantum** is determined by a prescaled version of the TWAI controller's source clock. A single bit contains the following segments in the following order:

1. The **Synchronization Segment** consists of a single time quantum
2. **Timing Segment 1** consists of 1 to 16 time quanta before sample point
3. **Timing Segment 2** consists of 1 to 8 time quanta after sample point

The **Baudrate Prescaler** is used to determine the period of each time quantum by dividing the TWAI controller's source clock (80 MHz APB clock). On the ESP32, the brp can be **any even number from 2 to 128**.

If the ESP32 is a revision 2 or later chip, the brp will **also support any multiple of 4 from 132 to 256**, and can be enabled by setting the *CONFIG_ESP32_REV_MIN* to revision 2 or higher.

The sample point of a bit is located on the intersection of Timing Segment 1 and 2. Enabling **Triple Sampling** will cause 3 time quanta to be sampled per bit instead of 1 (extra samples are located at the tail end of Timing Segment 1).

The **Synchronization Jump Width** is used to determine the maximum number of time quanta a single bit time can be lengthened/shortened for synchronization purposes. sjw can **range from 1 to 4**.

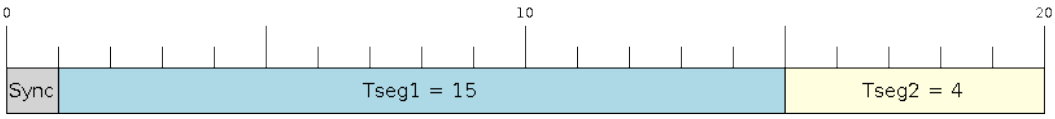

Fig. 22: Bit timing configuration for 500kbit/s given BRP = 8

Note: Multiple combinations of `brp`, `tseg_1`, `tseg_2`, and `sjw` can achieve the same bit rate. Users should tune these values to the physical characteristics of their bus by taking into account factors such as **propagation delay, node information processing time, and phase errors**.

Bit timing **macro initializers** are also available for commonly used bit rates. The following macro initializers are provided by the TWAI driver.

- `TWAI_TIMING_CONFIG_1MBITS()`
- `TWAI_TIMING_CONFIG_800KBITS()`
- `TWAI_TIMING_CONFIG_500KBITS()`
- `TWAI_TIMING_CONFIG_250KBITS()`
- `TWAI_TIMING_CONFIG_125KBITS()`
- `TWAI_TIMING_CONFIG_100KBITS()`
- `TWAI_TIMING_CONFIG_50KBITS()`
- `TWAI_TIMING_CONFIG_25KBITS()`

Revision 2 or later of the ESP32 also supports the following bit rates:

- `TWAI_TIMING_CONFIG_20KBITS()`
- `TWAI_TIMING_CONFIG_16KBITS()`
- `TWAI_TIMING_CONFIG_12_5KBITS()`

Acceptance Filter The TWAI controller contains a hardware acceptance filter which can be used to filter messages of a particular ID. A node that filters out a message **will not receive the message, but will still acknowledge it**. Acceptance filters can make a node more efficient by filtering out messages sent over the bus that are irrelevant to the node. The acceptance filter is configured using two 32-bit values within *`twai_filter_config_t`* known as the **acceptance code** and the **acceptance mask**.

The **acceptance code** specifies the bit sequence which a message's ID, RTR, and data bytes must match in order for the message to be received by the TWAI controller. The **acceptance mask** is a bit sequence specifying which bits of the acceptance code can be ignored. This allows for a messages of different IDs to be accepted by a single acceptance code.

The acceptance filter can be used under **Single or Dual Filter Mode**. Single Filter Mode will use the acceptance code and mask to define a single filter. This allows for the first two data bytes of a standard frame to be filtered, or the entirety of an extended frame's 29-bit ID. The following diagram illustrates how the 32-bit acceptance code and mask will be interpreted under Single Filter Mode (Note: The yellow and blue fields represent standard and extended frame formats respectively).

Dual Filter Mode will use the acceptance code and mask to define two separate filters allowing for increased flexibility of ID's to accept, but does not allow for all 29-bits of an extended ID to be filtered. The following diagram illustrates how the 32-bit acceptance code and mask will be interpreted under **Dual Filter Mode** (Note: The yellow and blue fields represent standard and extended frame formats respectively).

Disabling TX Queue The TX queue can be disabled during configuration by setting the `tx_queue_len` member of *`twai_general_config_t`* to `0`. This will allow applications that do not require message transmission to save a small amount of memory when using the TWAI driver.

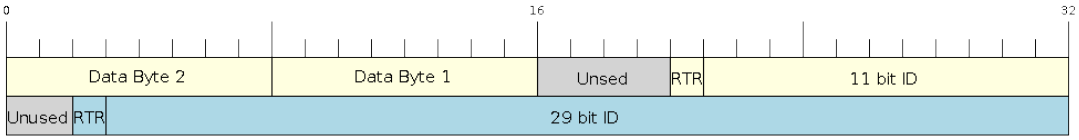

Fig. 23: Bit layout of single filter mode (Right side MSBit)

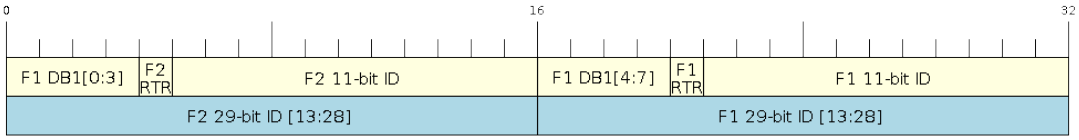

Fig. 24: Bit layout of dual filter mode (Right side MSBit)

Placing ISR into IRAM The TWAI driver's ISR (Interrupt Service Routine) can be placed into IRAM so that the ISR can still run whilst the cache is disabled. Placing the ISR into IRAM may be necessary to maintain the TWAI driver's functionality during lengthy cache disabling operations (such as SPI Flash writes, OTA updates etc). Whilst the cache is disabled, the ISR will continue to:

- Read received messages from the RX buffer and place them into the driver's RX queue.
- Load messages pending transmission from the driver's TX queue and write them into the TX buffer.

To place the TWAI driver's ISR, users must do the following:

- Enable the *CONFIG_TWAI_ISR_IN_IRAM* option using `idf.py menuconfig`.
- When calling `twai_driver_install()`, the *intr_flags* member of `twai_general_config_t` should set the `ESP_INTR_FLAG_IRAM` set.

Note: When the *CONFIG_TWAI_ISR_IN_IRAM* option is enabled, the TWAI driver will no longer log any alerts (i.e., the `TWAI_ALERT_AND_LOG` flag will not have any effect).

Driver Operation

The TWAI driver is designed with distinct states and strict rules regarding the functions or conditions that trigger a state transition. The following diagram illustrates the various states and their transitions.

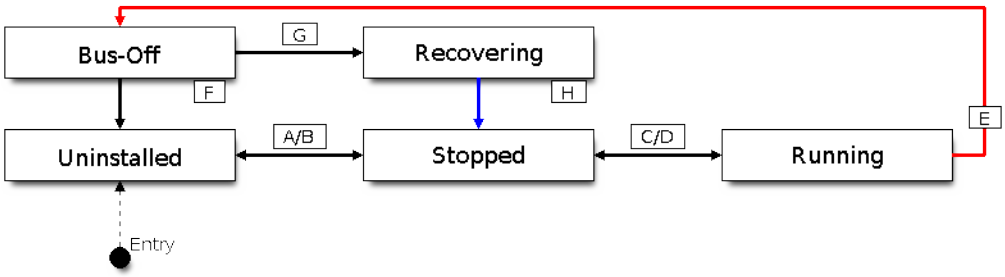

Fig. 25: State transition diagram of the TWAI driver (see table below)

Label	Transition	Action/Condition
A	Uninstalled -> Stopped	*twai_driver_install()*
B	Stopped -> Uninstalled	*twai_driver_uninstall()*
C	Stopped -> Running	*twai_start()*
D	Running -> Stopped	*twai_stop()*
E	Running -> Bus-Off	Transmit Error Counter >= 256
F	Bus-Off -> Uninstalled	*twai_driver_uninstall()*
G	Bus-Off -> Recovering	*twai_initiate_recovery()*
H	Recovering -> Stopped	128 occurrences of 11 consecutive recessive bits.

Driver States **Uninstalled**: In the uninstalled state, no memory is allocated for the driver and the TWAI controller is powered OFF.

Stopped: In this state, the TWAI controller is powered ON and the TWAI driver has been installed. However the TWAI controller will be unable to take part in any bus activities such as transmitting, receiving, or acknowledging messages.

Running: In the running state, the TWAI controller is able to take part in bus activities. Therefore messages can be transmitted/received/acknowledged. Furthermore the TWAI controller will be able to transmit error frames upon detection of errors on the bus.

Bus-Off: The bus-off state is automatically entered when the TWAI controller's Transmit Error Counter becomes greater than or equal to 256. The bus-off state indicates the occurrence of severe errors on the bus or in the TWAI controller. Whilst in the bus-off state, the TWAI controller will be unable to take part in any bus activities. To exit the bus-off state, the TWAI controller must undergo the bus recovery process.

Recovering: The recovering state is entered when the TWAI controller undergoes bus recovery. The TWAI controller/TWAI driver will remain in the recovering state until the 128 occurrences of 11 consecutive recessive bits is observed on the bus.

Message Fields and Flags The TWAI driver distinguishes different types of messages by using the various bit field members of the *twai_message_t* structure. These bit field members determine whether a message is in standard or extended format, a remote frame, and the type of transmission to use when transmitting such a message.

These bit field members can also be toggled using the the *flags* member of *twai_message_t* and the following message flags:

Message Flag	Description
TWAI_MSG_FLAG_EXTD	Message is in Extended Frame Format (29bit ID)
TWAI_MSG_FLAG_RTR	Message is a Remote Frame (Remote Transmission Request)
TWAI_MSG_FLAG_SS	Transmit message using Single Shot Transmission (Message will not be retransmitted upon error or loss of arbitration). Unused for received message.
TWAI_MSG_FLAG_SELF	Transmit message using Self Reception Request (Transmitted message will also received by the same node). Unused for received message.
TWAI_MSG_FLAG_DLC_NON_COMP	Message's Data length code is larger than 8. This will break compliance with TWAI
TWAI_MSG_FLAG_NONE	Clears all bit fields. Equivalent to a Standard Frame Format (11bit ID) Data Frame.

Examples

Configuration & Installation The following code snippet demonstrates how to configure, install, and start the TWAI driver via the use of the various configuration structures, macro initializers, the *twai_driver_install()* function, and the *twai_start()* function.

```
#include "driver/gpio.h"
#include "driver/twai.h"

void app_main()
{
    //Initialize configuration structures using macro initializers
    twai_general_config_t g_config = TWAI_GENERAL_CONFIG_DEFAULT(GPIO_NUM_21, GPIO_
↪NUM_22, TWAI_MODE_NORMAL);
    twai_timing_config_t t_config = TWAI_TIMING_CONFIG_500KBITS();
    twai_filter_config_t f_config = TWAI_FILTER_CONFIG_ACCEPT_ALL();

    //Install TWAI driver
    if (twai_driver_install(&g_config, &t_config, &f_config) == ESP_OK) {
        printf("Driver installed\n");
    } else {
        printf("Failed to install driver\n");
        return;
    }

    //Start TWAI driver
    if (twai_start() == ESP_OK) {
        printf("Driver started\n");
    } else {
        printf("Failed to start driver\n");
        return;
    }

    ...

}
```

The usage of macro initializers is not mandatory and each of the configuration structures can be manually.

Message Transmission The following code snippet demonstrates how to transmit a message via the usage of the *twai_message_t* type and *twai_transmit()* function.

```
#include "driver/twai.h"

...

//Configure message to transmit
twai_message_t message;
message.identifier = 0xAAAA;
message.extd = 1;
message.data_length_code = 4;
for (int i = 0; i < 4; i++) {
    message.data[i] = 0;
}

//Queue message for transmission
if (twai_transmit(&message, pdMS_TO_TICKS(1000)) == ESP_OK) {
    printf("Message queued for transmission\n");
} else {
    printf("Failed to queue message for transmission\n");
}
```

Message Reception The following code snippet demonstrates how to receive a message via the usage of the *twai_message_t* type and *twai_receive()* function.

```
#include "driver/twai.h"

...

//Wait for message to be received
twai_message_t message;
if (twai_receive(&message, pdMS_TO_TICKS(10000)) == ESP_OK) {
    printf("Message received\n");
} else {
    printf("Failed to receive message\n");
    return;
}

//Process received message
if (message.extd) {
    printf("Message is in Extended Format\n");
} else {
    printf("Message is in Standard Format\n");
}
printf("ID is %d\n", message.identifier);
if (!(message.rtr)) {
    for (int i = 0; i < message.data_length_code; i++) {
        printf("Data byte %d = %d\n", i, message.data[i]);
    }
}
```

Reconfiguring and Reading Alerts The following code snippet demonstrates how to reconfigure and read TWAI driver alerts via the use of the *twai_reconfigure_alerts()* and *twai_read_alerts()* functions.

```
#include "driver/twai.h"

...

//Reconfigure alerts to detect Error Passive and Bus-Off error states
uint32_t alerts_to_enable = TWAI_ALERT_ERR_PASS | TWAI_ALERT_BUS_OFF;
if (twai_reconfigure_alerts(alerts_to_enable, NULL) == ESP_OK) {
    printf("Alerts reconfigured\n");
} else {
    printf("Failed to reconfigure alerts");
}

//Block indefinitely until an alert occurs
uint32_t alerts_triggered;
twai_read_alerts(&alerts_triggered, portMAX_DELAY);
```

Stop and Uninstall The following code demonstrates how to stop and uninstall the TWAI driver via the use of the *twai_stop()* and *twai_driver_uninstall()* functions.

```
#include "driver/twai.h"

...

//Stop the TWAI driver
if (twai_stop() == ESP_OK) {
    printf("Driver stopped\n");
} else {
    printf("Failed to stop driver\n");
    return;
}
```

(continues on next page)

(continued from previous page)

```
//Uninstall the TWAI driver
if (twai_driver_uninstall() == ESP_OK) {
    printf("Driver uninstalled\n");
} else {
    printf("Failed to uninstall driver\n");
    return;
}
```

Multiple ID Filter Configuration The acceptance mask in *twai_filter_config_t* can be configured such that two or more IDs will be accepted for a single filter. For a particular filter to accept multiple IDs, the conflicting bit positions amongst the IDs must be set in the acceptance mask. The acceptance code can be set to any one of the IDs.

The following example shows how the calculate the acceptance mask given multiple IDs:

```
ID1 =  11'b101 1010 0000
ID2 =  11'b101 1010 0001
ID3 =  11'b101 1010 0100
ID4 =  11'b101 1010 1000
//Acceptance Mask
MASK = 11'b000 0000 1101
```

Application Examples **Network Example:** The TWAI Network example demonstrates communication between two ESP32s using the TWAI driver API. One TWAI node acts as a network master that initiates and ceases the transfer of a data from another node acting as a network slave. The example can be found via peripherals/twai/twai_network.

Alert and Recovery Example: This example demonstrates how to use the TWAI driver's alert and bus-off recovery API. The example purposely introduces errors on the bus to put the TWAI controller into the Bus-Off state. An alert is used to detect the Bus-Off state and trigger the bus recovery process. The example can be found via peripherals/twai/twai_alert_and_recovery.

Self Test Example: This example uses the No Acknowledge Mode and Self Reception Request to cause the TWAI controller to send and simultaneously receive a series of messages. This example can be used to verify if the connections between the TWAI controller and the external transceiver are working correctly. The example can be found via peripherals/twai/twai_self_test.

API Reference

Header File

- components/hal/include/hal/twai_types.h

Structures

struct **twai_message_t**

Structure to store a TWAI message.

Note: The flags member is deprecated

Public Members

uint32_t **extd**

Extended Frame Format (29bit ID)

uint32_t **rtr**

Message is a Remote Frame

uint32_t **ss**

Transmit as a Single Shot Transmission. Unused for received.

uint32_t **self**

Transmit as a Self Reception Request. Unused for received.

uint32_t **dlc_non_comp**

Message's Data length code is larger than 8. This will break compliance with ISO 11898-1

uint32_t **reserved**

Reserved bits

uint32_t **flags**

Deprecated: Alternate way to set bits using message flags

uint32_t **identifier**

11 or 29 bit identifier

uint8_t **data_length_code**

Data length code

uint8_t **data**[8]

Data bytes (not relevant in RTR frame)

struct **twai_timing_config_t**

Structure for bit timing configuration of the TWAI driver.

Note: Macro initializers are available for this structure

Public Members

uint32_t **brp**

Baudrate prescaler (i.e., APB clock divider). Any even number from 2 to 128 for ESP32, 2 to 32768 for ESP32S2. For ESP32 Rev 2 or later, multiples of 4 from 132 to 256 are also supported

uint8_t **tseg_1**

Timing segment 1 (Number of time quanta, between 1 to 16)

uint8_t **tseg_2**

Timing segment 2 (Number of time quanta, 1 to 8)

uint8_t **sjw**

Synchronization Jump Width (Max time quanta jump for synchronize from 1 to 4)

bool **triple_sampling**

Enables triple sampling when the TWAI controller samples a bit

struct **twai_filter_config_t**

Structure for acceptance filter configuration of the TWAI driver (see documentation)

Note: Macro initializers are available for this structure

Public Members

uint32_t **acceptance_code**

32-bit acceptance code

uint32_t **acceptance_mask**

32-bit acceptance mask

bool **single_filter**

Use Single Filter Mode (see documentation)

Macros

TWAI_EXTD_ID_MASK

TWAI Constants.

Bit mask for 29 bit Extended Frame Format ID

TWAI_STD_ID_MASK

Bit mask for 11 bit Standard Frame Format ID

TWAI_FRAME_MAX_DLC

Max data bytes allowed in TWAI

TWAI_FRAME_EXTD_ID_LEN_BYTES

EFF ID requires 4 bytes (29bit)

TWAI_FRAME_STD_ID_LEN_BYTES

SFF ID requires 2 bytes (11bit)

TWAI_ERR_PASS_THRESH

Error counter threshold for error passive

Enumerations

enum **twai_mode_t**

TWAI Controller operating modes.

Values:

enumerator **TWAI_MODE_NORMAL**

Normal operating mode where TWAI controller can send/receive/acknowledge messages

enumerator **TWAI_MODE_NO_ACK**

Transmission does not require acknowledgment. Use this mode for self testing

enumerator **TWAI_MODE_LISTEN_ONLY**

The TWAI controller will not influence the bus (No transmissions or acknowledgments) but can receive messages

Header File

- components/driver/include/driver/twai.h

Functions

esp_err_t **twai_driver_install** (const *twai_general_config_t* *g_config, const *twai_timing_config_t* *t_config, const *twai_filter_config_t* *f_config)

Install TWAI driver.

This function installs the TWAI driver using three configuration structures. The required memory is allocated and the TWAI driver is placed in the stopped state after running this function.

Note: Macro initializers are available for the configuration structures (see documentation)

Note: To reinstall the TWAI driver, call twai_driver_uninstall() first

Parameters

- **g_config** –**[in]** General configuration structure
- **t_config** –**[in]** Timing configuration structure
- **f_config** –**[in]** Filter configuration structure

Returns

- ESP_OK: Successfully installed TWAI driver
- ESP_ERR_INVALID_ARG: Arguments are invalid
- ESP_ERR_NO_MEM: Insufficient memory
- ESP_ERR_INVALID_STATE: Driver is already installed

esp_err_t **twai_driver_uninstall** (void)

Uninstall the TWAI driver.

This function uninstalls the TWAI driver, freeing the memory utilized by the driver. This function can only be called when the driver is in the stopped state or the bus-off state.

Warning: The application must ensure that no tasks are blocked on TX/RX queues or alerts when this function is called.

Returns

- ESP_OK: Successfully uninstalled TWAI driver
- ESP_ERR_INVALID_STATE: Driver is not in stopped/bus-off state, or is not installed

esp_err_t **twai_start**(void)

Start the TWAI driver.

This function starts the TWAI driver, putting the TWAI driver into the running state. This allows the TWAI driver to participate in TWAI bus activities such as transmitting/receiving messages. The TX and RX queue are reset in this function, clearing any messages that are unread or pending transmission. This function can only be called when the TWAI driver is in the stopped state.

Returns

- ESP_OK: TWAI driver is now running
- ESP_ERR_INVALID_STATE: Driver is not in stopped state, or is not installed

esp_err_t **twai_stop**(void)

Stop the TWAI driver.

This function stops the TWAI driver, preventing any further message from being transmitted or received until twai_start() is called. Any messages in the TX queue are cleared. Any messages in the RX queue should be read by the application after this function is called. This function can only be called when the TWAI driver is in the running state.

Warning: A message currently being transmitted/received on the TWAI bus will be ceased immediately. This may lead to other TWAI nodes interpreting the unfinished message as an error.

Returns

- ESP_OK: TWAI driver is now Stopped
- ESP_ERR_INVALID_STATE: Driver is not in running state, or is not installed

esp_err_t **twai_transmit**(const *twai_message_t* *message, TickType_t ticks_to_wait)

Transmit a TWAI message.

This function queues a TWAI message for transmission. Transmission will start immediately if no other messages are queued for transmission. If the TX queue is full, this function will block until more space becomes available or until it times out. If the TX queue is disabled (TX queue length = 0 in configuration), this function will return immediately if another message is undergoing transmission. This function can only be called when the TWAI driver is in the running state and cannot be called under Listen Only Mode.

Note: This function does not guarantee that the transmission is successful. The TX_SUCCESS/TX_FAILED alert can be enabled to alert the application upon the success/failure of a transmission.

Note: The TX_IDLE alert can be used to alert the application when no other messages are awaiting transmission.

Parameters

- **message** –**[in]** Message to transmit
- **ticks_to_wait** –**[in]** Number of FreeRTOS ticks to block on the TX queue

Returns

- ESP_OK: Transmission successfully queued/initiated
- ESP_ERR_INVALID_ARG: Arguments are invalid
- ESP_ERR_TIMEOUT: Timed out waiting for space on TX queue
- ESP_FAIL: TX queue is disabled and another message is currently transmitting
- ESP_ERR_INVALID_STATE: TWAI driver is not in running state, or is not installed
- ESP_ERR_NOT_SUPPORTED: Listen Only Mode does not support transmissions

esp_err_t **twai_receive**(*twai_message_t* *message, TickType_t ticks_to_wait)

Receive a TWAI message.

This function receives a message from the RX queue. The flags field of the message structure will indicate the type of message received. This function will block if there are no messages in the RX queue

Warning: The flags field of the received message should be checked to determine if the received message contains any data bytes.

Parameters
- **message** –**[out]** Received message
- **ticks_to_wait** –**[in]** Number of FreeRTOS ticks to block on RX queue

Returns
- ESP_OK: Message successfully received from RX queue
- ESP_ERR_TIMEOUT: Timed out waiting for message
- ESP_ERR_INVALID_ARG: Arguments are invalid
- ESP_ERR_INVALID_STATE: TWAI driver is not installed

esp_err_t **twai_read_alerts**(uint32_t *alerts, TickType_t ticks_to_wait)

Read TWAI driver alerts.

This function will read the alerts raised by the TWAI driver. If no alert has been issued when this function is called, this function will block until an alert occurs or until it timeouts.

Note: Multiple alerts can be raised simultaneously. The application should check for all alerts that have been enabled.

Parameters
- **alerts** –**[out]** Bit field of raised alerts (see documentation for alert flags)
- **ticks_to_wait** –**[in]** Number of FreeRTOS ticks to block for alert

Returns
- ESP_OK: Alerts read
- ESP_ERR_TIMEOUT: Timed out waiting for alerts
- ESP_ERR_INVALID_ARG: Arguments are invalid
- ESP_ERR_INVALID_STATE: TWAI driver is not installed

esp_err_t **twai_reconfigure_alerts**(uint32_t alerts_enabled, uint32_t *current_alerts)

Reconfigure which alerts are enabled.

This function reconfigures which alerts are enabled. If there are alerts which have not been read whilst reconfiguring, this function can read those alerts.

Parameters
- **alerts_enabled** –**[in]** Bit field of alerts to enable (see documentation for alert flags)
- **current_alerts** –**[out]** Bit field of currently raised alerts. Set to NULL if unused

Returns
- ESP_OK: Alerts reconfigured
- ESP_ERR_INVALID_STATE: TWAI driver is not installed

esp_err_t **twai_initiate_recovery**(void)

Start the bus recovery process.

This function initiates the bus recovery process when the TWAI driver is in the bus-off state. Once initiated, the TWAI driver will enter the recovering state and wait for 128 occurrences of the bus-free signal on the TWAI bus before returning to the stopped state. This function will reset the TX queue, clearing any messages pending transmission.

Note: The BUS_RECOVERED alert can be enabled to alert the application when the bus recovery process completes.

Returns
- ESP_OK: Bus recovery started
- ESP_ERR_INVALID_STATE: TWAI driver is not in the bus-off state, or is not installed

esp_err_t **twai_get_status_info**(*twai_status_info_t* *status_info)

Get current status information of the TWAI driver.

Parameters **status_info** –**[out]** Status information

Returns
- ESP_OK: Status information retrieved
- ESP_ERR_INVALID_ARG: Arguments are invalid
- ESP_ERR_INVALID_STATE: TWAI driver is not installed

esp_err_t **twai_clear_transmit_queue**(void)

Clear the transmit queue.

This function will clear the transmit queue of all messages.

Note: The transmit queue is automatically cleared when twai_stop() or twai_initiate_recovery() is called.

Returns
- ESP_OK: Transmit queue cleared
- ESP_ERR_INVALID_STATE: TWAI driver is not installed or TX queue is disabled

esp_err_t **twai_clear_receive_queue**(void)

Clear the receive queue.

This function will clear the receive queue of all messages.

Note: The receive queue is automatically cleared when twai_start() is called.

Returns
- ESP_OK: Transmit queue cleared
- ESP_ERR_INVALID_STATE: TWAI driver is not installed

Structures

struct **twai_general_config_t**

Structure for general configuration of the TWAI driver.

Note: Macro initializers are available for this structure

Public Members

twai_mode_t **mode**

Mode of TWAI controller

gpio_num_t **tx_io**

Transmit GPIO number

gpio_num_t **rx_io**

Receive GPIO number

gpio_num_t **clkout_io**

CLKOUT GPIO number (optional, set to -1 if unused)

gpio_num_t **bus_off_io**

Bus off indicator GPIO number (optional, set to -1 if unused)

uint32_t **tx_queue_len**

Number of messages TX queue can hold (set to 0 to disable TX Queue)

uint32_t **rx_queue_len**

Number of messages RX queue can hold

uint32_t **alerts_enabled**

Bit field of alerts to enable (see documentation)

uint32_t **clkout_divider**

CLKOUT divider. Can be 1 or any even number from 2 to 14 (optional, set to 0 if unused)

int **intr_flags**

Interrupt flags to set the priority of the driver's ISR. Note that to use the ESP_INTR_FLAG_IRAM, the CONFIG_TWAI_ISR_IN_IRAM option should be enabled first.

struct **twai_status_info_t**

Structure to store status information of TWAI driver.

Public Members

twai_state_t **state**

Current state of TWAI controller (Stopped/Running/Bus-Off/Recovery)

uint32_t **msgs_to_tx**

Number of messages queued for transmission or awaiting transmission completion

uint32_t **msgs_to_rx**

Number of messages in RX queue waiting to be read

uint32_t **tx_error_counter**

Current value of Transmit Error Counter

uint32_t **rx_error_counter**

Current value of Receive Error Counter

uint32_t **tx_failed_count**

Number of messages that failed transmissions

uint32_t **rx_missed_count**

Number of messages that were lost due to a full RX queue (or errata workaround if enabled)

uint32_t **rx_overrun_count**

Number of messages that were lost due to a RX FIFO overrun

uint32_t **arb_lost_count**

Number of instances arbitration was lost

uint32_t **bus_error_count**

Number of instances a bus error has occurred

Macros

TWAI_IO_UNUSED

Marks GPIO as unused in TWAI configuration

Enumerations

enum **twai_state_t**

TWAI driver states.

Values:

enumerator **TWAI_STATE_STOPPED**

Stopped state. The TWAI controller will not participate in any TWAI bus activities

enumerator **TWAI_STATE_RUNNING**

Running state. The TWAI controller can transmit and receive messages

enumerator **TWAI_STATE_BUS_OFF**

Bus-off state. The TWAI controller cannot participate in bus activities until it has recovered

enumerator **TWAI_STATE_RECOVERING**

Recovering state. The TWAI controller is undergoing bus recovery

2.3.22 Universal Asynchronous Receiver/Transmitter (UART)

Overview

A Universal Asynchronous Receiver/Transmitter (UART) is a hardware feature that handles communication (i.e., timing requirements and data framing) using widely-adopted asynchronous serial communication interfaces, such as RS232, RS422, RS485. A UART provides a widely adopted and cheap method to realize full-duplex or half-duplex data exchange among different devices.

The ESP32 chip has three UART controllers (UART0, UART1, and UART2), each featuring an identical set of registers to simplify programming and for more flexibility.

Each UART controller is independently configurable with parameters such as baud rate, data bit length, bit ordering, number of stop bits, parity bit etc. All the controllers are compatible with UART-enabled devices from various manufacturers and can also support Infrared Data Association protocols (IrDA).

Functional Overview

The following overview describes how to establish communication between an ESP32 and other UART devices using the functions and data types of the UART driver. The overview reflects a typical programming workflow and is broken down into the sections provided below:

1. *Setting Communication Parameters* - Setting baud rate, data bits, stop bits, etc.
2. *Setting Communication Pins* - Assigning pins for connection to a device.
3. *Driver Installation* - Allocating ESP32's resources for the UART driver.
4. *Running UART Communication* - Sending / receiving data
5. *Using Interrupts* - Triggering interrupts on specific communication events
6. *Deleting a Driver* - Freeing allocated resources if a UART communication is no longer required

Steps 1 to 3 comprise the configuration stage. Step 4 is where the UART starts operating. Steps 5 and 6 are optional.

The UART driver's functions identify each of the UART controllers using `uart_port_t`. This identification is needed for all the following function calls.

Setting Communication Parameters UART communication parameters can be configured all in a single step or individually in multiple steps.

Single Step Call the function `uart_param_config()` and pass to it a `uart_config_t` structure. The `uart_config_t` structure should contain all the required parameters. See the example below.

```
const uart_port_t uart_num = UART_NUM_2;
uart_config_t uart_config = {
    .baud_rate = 115200,
    .data_bits = UART_DATA_8_BITS,
    .parity = UART_PARITY_DISABLE,
    .stop_bits = UART_STOP_BITS_1,
    .flow_ctrl = UART_HW_FLOWCTRL_CTS_RTS,
    .rx_flow_ctrl_thresh = 122,
};
// Configure UART parameters
ESP_ERROR_CHECK(uart_param_config(uart_num, &uart_config));
```

For more information on how to configure the hardware flow control options, please refer to peripherals/uart/uart_echo.

Multiple Steps Configure specific parameters individually by calling a dedicated function from the table given below. These functions are also useful if re-configuring a single parameter.

Table 6: Functions for Configuring specific parameters individually

Parameter to Configure	Function
Baud rate	`uart_set_baudrate()`
Number of transmitted bits	`uart_set_word_length()` selected out of `uart_word_length_t`
Parity control	`uart_set_parity()` selected out of `uart_parity_t`
Number of stop bits	`uart_set_stop_bits()` selected out of `uart_stop_bits_t`
Hardware flow control mode	`uart_set_hw_flow_ctrl()` selected out of `uart_hw_flowcontrol_t`
Communication mode	`uart_set_mode()` selected out of `uart_mode_t`

Each of the above functions has a `_get_` counterpart to check the currently set value. For example, to check the current baud rate value, call *uart_get_baudrate()*.

Setting Communication Pins After setting communication parameters, configure the physical GPIO pins to which the other UART device will be connected. For this, call the function *uart_set_pin()* and specify the GPIO pin numbers to which the driver should route the Tx, Rx, RTS, and CTS signals. If you want to keep a currently allocated pin number for a specific signal, pass the macro *UART_PIN_NO_CHANGE*.

The same macro should be specified for pins that will not be used.

```
// Set UART pins(TX: IO4, RX: IO5, RTS: IO18, CTS: IO19)
ESP_ERROR_CHECK(uart_set_pin(UART_NUM_2, 4, 5, 18, 19));
```

Driver Installation Once the communication pins are set, install the driver by calling *uart_driver_install()* and specify the following parameters:

- Size of Tx ring buffer
- Size of Rx ring buffer
- Event queue handle and size
- Flags to allocate an interrupt

The function will allocate the required internal resources for the UART driver.

```
// Setup UART buffered IO with event queue
const int uart_buffer_size = (1024 * 2);
QueueHandle_t uart_queue;
// Install UART driver using an event queue here
ESP_ERROR_CHECK(uart_driver_install(UART_NUM_2, uart_buffer_size, \
                                        uart_buffer_size, 10, &uart_queue, 0));
```

Once this step is complete, you can connect the external UART device and check the communication.

Running UART Communication Serial communication is controlled by each UART controller's finite state machine (FSM).

The process of sending data involves the following steps:

1. Write data into Tx FIFO buffer
2. FSM serializes the data
3. FSM sends the data out

The process of receiving data is similar, but the steps are reversed:

1. FSM processes an incoming serial stream and parallelizes it
2. FSM writes the data into Rx FIFO buffer
3. Read the data from Rx FIFO buffer

Therefore, an application will be limited to writing and reading data from a respective buffer using *uart_write_bytes()* and *uart_read_bytes()* respectively, and the FSM will do the rest.

Transmitting After preparing the data for transmission, call the function *uart_write_bytes()* and pass the data buffer's address and data length to it. The function will copy the data to the Tx ring buffer (either immediately or after enough space is available), and then exit. When there is free space in the Tx FIFO buffer, an interrupt service routine (ISR) moves the data from the Tx ring buffer to the Tx FIFO buffer in the background. The code below demonstrates the use of this function.

```
// Write data to UART.
char* test_str = "This is a test string.\n";
uart_write_bytes(uart_num, (const char*)test_str, strlen(test_str));
```

The function *uart_write_bytes_with_break()* is similar to *uart_write_bytes()* but adds a serial break signal at the end of the transmission. A 'serial break signal' means holding the Tx line low for a period longer than one data frame.

```
// Write data to UART, end with a break signal.
uart_write_bytes_with_break(uart_num, "test break\n",strlen("test break\n"), 100);
```

Another function for writing data to the Tx FIFO buffer is *uart_tx_chars()*. Unlike *uart_write_bytes()*, this function will not block until space is available. Instead, it will write all data which can immediately fit into the hardware Tx FIFO, and then return the number of bytes that were written.

There is a 'companion' function *uart_wait_tx_done()* that monitors the status of the Tx FIFO buffer and returns once it is empty.

```
// Wait for packet to be sent
const uart_port_t uart_num = UART_NUM_2;
ESP_ERROR_CHECK(uart_wait_tx_done(uart_num, 100)); // wait timeout is 100 RTOS␣
↪ticks (TickType_t)
```

Receiving Once the data is received by the UART and saved in the Rx FIFO buffer, it needs to be retrieved using the function *uart_read_bytes()*. Before reading data, you can check the number of bytes available in the Rx FIFO buffer by calling *uart_get_buffered_data_len()*. An example of using these functions is given below.

```
// Read data from UART.
const uart_port_t uart_num = UART_NUM_2;
uint8_t data[128];
int length = 0;
ESP_ERROR_CHECK(uart_get_buffered_data_len(uart_num, (size_t*)&length));
length = uart_read_bytes(uart_num, data, length, 100);
```

If the data in the Rx FIFO buffer is no longer needed, you can clear the buffer by calling *uart_flush()*.

Software Flow Control If the hardware flow control is disabled, you can manually set the RTS and DTR signal levels by using the functions *uart_set_rts()* and *uart_set_dtr()* respectively.

Communication Mode Selection The UART controller supports a number of communication modes. A mode can be selected using the function *uart_set_mode()*. Once a specific mode is selected, the UART driver will handle the behavior of a connected UART device accordingly. As an example, it can control the RS485 driver chip using the RTS line to allow half-duplex RS485 communication.

```
// Setup UART in rs485 half duplex mode
ESP_ERROR_CHECK(uart_set_mode(uart_num, UART_MODE_RS485_HALF_DUPLEX));
```

Using Interrupts There are many interrupts that can be generated following specific UART states or detected errors. The full list of available interrupts is provided in *ESP32 Technical Reference Manual* > *UART Controller (UART)* > *UART Interrupts* and *UHCI Interrupts* [PDF]. You can enable or disable specific interrupts by calling *uart_enable_intr_mask()* or *uart_disable_intr_mask()* respectively. The mask of all interrupts is available as `UART_INTR_MASK`.

By default, the *uart_driver_install()* function installs the driver's internal interrupt handler to manage the Tx and Rx ring buffers and provides high-level API functions like events (see below). It is also possible to register a lower level interrupt handler instead using *uart_isr_register()*, and to free it again using *uart_isr_free()*. Some UART driver functions which use the Tx and Rx ring buffers, events, etc. will not automatically work in this case - it is necessary to handle the interrupts directly in the ISR. Inside the custom handler implementation, clear the interrupt status bits using *uart_clear_intr_status()*.

The API provides a convenient way to handle specific interrupts discussed in this document by wrapping them into dedicated functions:

- **Event detection**: There are several events defined in *uart_event_type_t* that may be reported to a user application using the FreeRTOS queue functionality. You can enable this functionality when calling *uart_driver_install()* described in *Driver Installation*. An example of using Event detection can be found in peripherals/uart/uart_events.
- **FIFO space threshold or transmission timeout reached**: The Tx and Rx FIFO buffers can trigger an interrupt when they are filled with a specific number of characters, or on a timeout of sending or receiving data. To use these interrupts, do the following:
  - Configure respective threshold values of the buffer length and timeout by entering them in the structure *uart_intr_config_t* and calling *uart_intr_config()*
  - Enable the interrupts using the functions *uart_enable_tx_intr()* and *uart_enable_rx_intr()*
  - Disable these interrupts using the corresponding functions *uart_disable_tx_intr()* or *uart_disable_rx_intr()*
- **Pattern detection**: An interrupt triggered on detecting a 'pattern' of the same character being received/sent repeatedly for a number of times. This functionality is demonstrated in the example peripherals/uart/uart_events. It can be used, e.g., to detect a command string followed by a specific number of identical characters (the 'pattern') added at the end of the command string. The following functions are available:
  - Configure and enable this interrupt using *uart_enable_pattern_det_intr()*
  - Disable the interrupt using *uart_disable_pattern_det_intr()*

Macros The API also defines several macros. For example, *UART_FIFO_LEN* defines the length of hardware FIFO buffers; *UART_BITRATE_MAX* gives the maximum baud rate supported by the UART controllers, etc.

Deleting a Driver If the communication established with *uart_driver_install()* is no longer required, the driver can be removed to free allocated resources by calling *uart_driver_delete()*.

Overview of RS485 specific communication options

Note: The following section will use `[UART_REGISTER_NAME].[UART_FIELD_BIT]` to refer to UART register fields/bits. For more information on a specific option bit, see *ESP32 Technical Reference Manual* > *UART Controller (UART)* > *Register Summary* [PDF]. Use the register name to navigate to the register description and then find the field/bit.

- `UART_RS485_CONF_REG.UART_RS485_EN`: setting this bit enables RS485 communication mode support.
- `UART_RS485_CONF_REG.UART_RS485TX_RX_EN`: if this bit is set, the transmitter's output signal loops back to the receiver's input signal.
- `UART_RS485_CONF_REG.UART_RS485RXBY_TX_EN`: if this bit is set, the transmitter will still be sending data if the receiver is busy (remove collisions automatically by hardware).

The ESP32's RS485 UART hardware can detect signal collisions during transmission of a datagram and generate the interrupt `UART_RS485_CLASH_INT` if this interrupt is enabled. The term collision means that a transmitted datagram is not equal to the one received on the other end. Data collisions are usually associated with the presence of other active devices on the bus or might occur due to bus errors.

The collision detection feature allows handling collisions when their interrupts are activated and triggered. The interrupts `UART_RS485_FRM_ERR_INT` and `UART_RS485_PARITY_ERR_INT` can be used with the collision detection feature to control frame errors and parity bit errors accordingly in RS485 mode. This functionality is supported in the UART driver and can be used by selecting the *UART_MODE_RS485_APP_CTRL* mode (see the function *uart_set_mode()*).

The collision detection feature can work with circuit A and circuit C (see Section *Interface Connection Options*). In the case of using circuit A or B, the RTS pin connected to the DE pin of the bus driver should be controlled by the

user application. Use the function *uart_get_collision_flag()* to check if the collision detection flag has been raised.

The ESP32 UART controllers themselves do not support half-duplex communication as they cannot provide automatic control of the RTS pin connected to the ~RE/DE input of RS485 bus driver. However, half-duplex communication can be achieved via software control of the RTS pin by the UART driver. This can be enabled by selecting the *UART_MODE_RS485_HALF_DUPLEX* mode when calling *uart_set_mode()*.

Once the host starts writing data to the Tx FIFO buffer, the UART driver automatically asserts the RTS pin (logic 1); once the last bit of the data has been transmitted, the driver de-asserts the RTS pin (logic 0). To use this mode, the software would have to disable the hardware flow control function. This mode works with all the used circuits shown below.

Interface Connection Options This section provides example schematics to demonstrate the basic aspects of ESP32's RS485 interface connection.

Note:

- The schematics below do **not** necessarily contain **all required elements**.
- The **analog devices** ADM483 & ADM2483 are examples of common RS485 transceivers and **can be replaced** with other similar transceivers.

Circuit A: Collision Detection Circuit

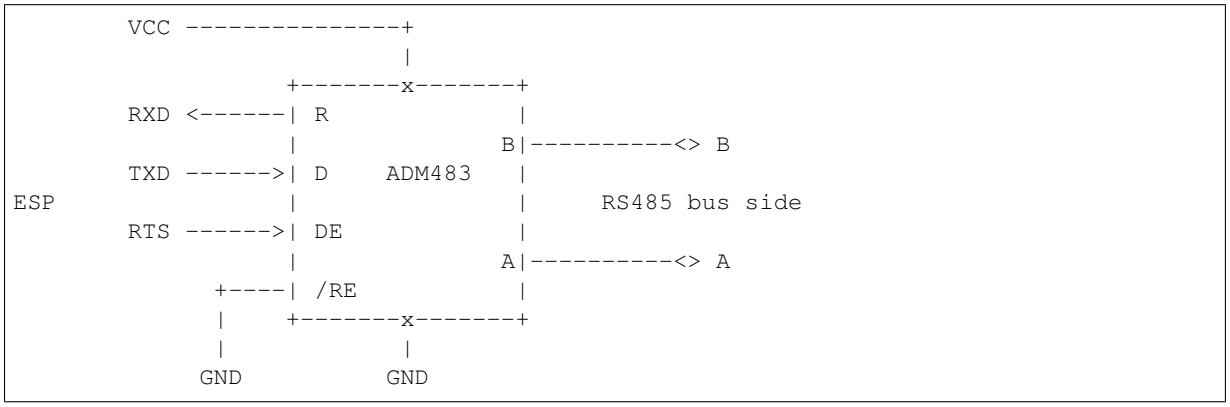

This circuit is preferable because it allows for collision detection and is quite simple at the same time. The receiver in the line driver is constantly enabled, which allows the UART to monitor the RS485 bus. Echo suppression is performed by the UART peripheral when the bit `UART_RS485_CONF_REG.UART_RS485TX_RX_EN` is enabled.

Circuit B: Manual Switching Transmitter/Receiver Without Collision Detection

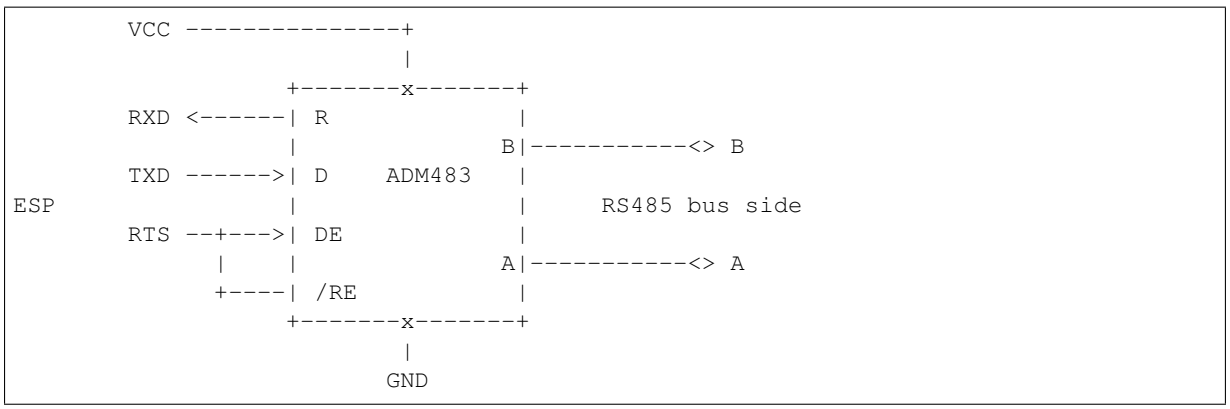

This circuit does not allow for collision detection. It suppresses the null bytes that the hardware receives when the bit `UART_RS485_CONF_REG.UART_RS485TX_RX_EN` is set. The bit `UART_RS485_CONF_REG.UART_RS485RXBY_TX_EN` is not applicable in this case.

Circuit C: Auto Switching Transmitter/Receiver

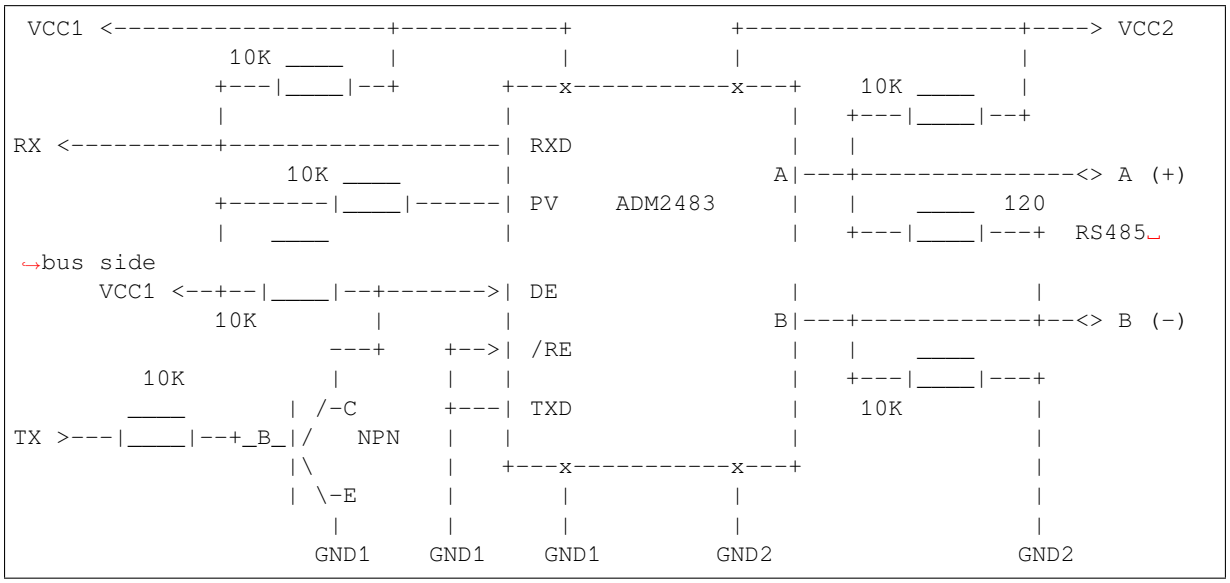

This galvanically isolated circuit does not require RTS pin control by a software application or driver because it controls the transceiver direction automatically. However, it requires suppressing null bytes during transmission by setting `UART_RS485_CONF_REG.UART_RS485RXBY_TX_EN` to 1 and `UART_RS485_CONF_REG.UART_RS485TX_RX_EN` to 0. This setup can work in any RS485 UART mode or even in *`UART_MODE_UART`*.

Application Examples

The table below describes the code examples available in the directory peripherals/uart/.

Code Example	Description
peripherals/uart/uart_echo	Configuring UART settings, installing the UART driver, and reading/writing over the UART1 interface.
peripherals/uart/uart_events	Reporting various communication events, using pattern detection interrupts.
peripherals/uart/uart_async_rxtxtasks	Transmitting and receiving data in two separate FreeRTOS tasks over the same UART.
peripherals/uart/uart_select	Using synchronous I/O multiplexing for UART file descriptors.
peripherals/uart/uart_echo_rs485	Setting up UART driver to communicate over RS485 interface in half-duplex mode. This example is similar to peripherals/uart/uart_echo but allows communication through an RS485 interface chip connected to ESP32 pins.
peripherals/uart/nmea0183_parser	Obtaining GPS information by parsing NMEA0183 statements received from GPS via the UART peripheral.

API Reference

Header File

- components/driver/include/driver/uart.h

Functions

esp_err_t **uart_driver_install** (*uart_port_t* uart_num, int rx_buffer_size, int tx_buffer_size, int queue_size, *QueueHandle_t* *uart_queue, int intr_alloc_flags)

Install UART driver and set the UART to the default configuration.

UART ISR handler will be attached to the same CPU core that this function is running on.

Note: Rx_buffer_size should be greater than UART_FIFO_LEN. Tx_buffer_size should be either zero or greater than UART_FIFO_LEN.

Parameters

- **uart_num** –UART port number, the max port number is (UART_NUM_MAX -1).
- **rx_buffer_size** –UART RX ring buffer size.
- **tx_buffer_size** –UART TX ring buffer size. If set to zero, driver will not use TX buffer, TX function will block task until all data have been sent out.
- **queue_size** –UART event queue size/depth.
- **uart_queue** –UART event queue handle (out param). On success, a new queue handle is written here to provide access to UART events. If set to NULL, driver will not use an event queue.
- **intr_alloc_flags** –Flags used to allocate the interrupt. One or multiple (ORred) ESP_INTR_FLAG_* values. See esp_intr_alloc.h for more info. Do not set ESP_INTR_FLAG_IRAM here (the driver's ISR handler is not located in IRAM)

Returns

- ESP_OK Success
- ESP_FAIL Parameter error

esp_err_t **uart_driver_delete** (*uart_port_t* uart_num)

Uninstall UART driver.

Parameters **uart_num** –UART port number, the max port number is (UART_NUM_MAX -1).

Returns

- ESP_OK Success
- ESP_FAIL Parameter error

bool **uart_is_driver_installed** (*uart_port_t* uart_num)

Checks whether the driver is installed or not.

Parameters **uart_num** –UART port number, the max port number is (UART_NUM_MAX -1).

Returns

- true driver is installed
- false driver is not installed

esp_err_t **uart_set_word_length** (*uart_port_t* uart_num, *uart_word_length_t* data_bit)

Set UART data bits.

Parameters

- **uart_num** –UART port number, the max port number is (UART_NUM_MAX -1).
- **data_bit** –UART data bits

Returns

- ESP_OK Success
- ESP_FAIL Parameter error

esp_err_t **uart_get_word_length** (*uart_port_t* uart_num, *uart_word_length_t* *data_bit)

Get the UART data bit configuration.

Parameters

- **uart_num** –UART port number, the max port number is (UART_NUM_MAX -1).
- **data_bit** –Pointer to accept value of UART data bits.

Returns

- ESP_FAIL Parameter error

- ESP_OK Success, result will be put in (*data_bit)

esp_err_t **uart_set_stop_bits**(*uart_port_t* uart_num, *uart_stop_bits_t* stop_bits)

Set UART stop bits.

Parameters
- **uart_num** –UART port number, the max port number is (UART_NUM_MAX -1).
- **stop_bits** –UART stop bits

Returns
- ESP_OK Success
- ESP_FAIL Fail

esp_err_t **uart_get_stop_bits**(*uart_port_t* uart_num, *uart_stop_bits_t* *stop_bits)

Get the UART stop bit configuration.

Parameters
- **uart_num** –UART port number, the max port number is (UART_NUM_MAX -1).
- **stop_bits** –Pointer to accept value of UART stop bits.

Returns
- ESP_FAIL Parameter error
- ESP_OK Success, result will be put in (*stop_bit)

esp_err_t **uart_set_parity**(*uart_port_t* uart_num, *uart_parity_t* parity_mode)

Set UART parity mode.

Parameters
- **uart_num** –UART port number, the max port number is (UART_NUM_MAX -1).
- **parity_mode** –the enum of uart parity configuration

Returns
- ESP_FAIL Parameter error
- ESP_OK Success

esp_err_t **uart_get_parity**(*uart_port_t* uart_num, *uart_parity_t* *parity_mode)

Get the UART parity mode configuration.

Parameters
- **uart_num** –UART port number, the max port number is (UART_NUM_MAX -1).
- **parity_mode** –Pointer to accept value of UART parity mode.

Returns
- ESP_FAIL Parameter error
- ESP_OK Success, result will be put in (*parity_mode)

esp_err_t **uart_set_baudrate**(*uart_port_t* uart_num, uint32_t baudrate)

Set UART baud rate.

Parameters
- **uart_num** –UART port number, the max port number is (UART_NUM_MAX -1).
- **baudrate** –UART baud rate.

Returns
- ESP_FAIL Parameter error
- ESP_OK Success

esp_err_t **uart_get_baudrate**(*uart_port_t* uart_num, uint32_t *baudrate)

Get the UART baud rate configuration.

Parameters
- **uart_num** –UART port number, the max port number is (UART_NUM_MAX -1).
- **baudrate** –Pointer to accept value of UART baud rate

Returns
- ESP_FAIL Parameter error
- ESP_OK Success, result will be put in (*baudrate)

esp_err_t **uart_set_line_inverse** (*uart_port_t* uart_num, uint32_t inverse_mask)

Set UART line inverse mode.

Parameters

- **uart_num** –UART port number, the max port number is (UART_NUM_MAX -1).
- **inverse_mask** –Choose the wires that need to be inverted. Using the ORred mask of `uart_signal_inv_t`

Returns

- ESP_OK Success
- ESP_FAIL Parameter error

esp_err_t **uart_set_hw_flow_ctrl** (*uart_port_t* uart_num, *uart_hw_flowcontrol_t* flow_ctrl, uint8_t rx_thresh)

Set hardware flow control.

Parameters

- **uart_num** –UART port number, the max port number is (UART_NUM_MAX -1).
- **flow_ctrl** –Hardware flow control mode
- **rx_thresh** –Threshold of Hardware RX flow control (0 ~ UART_FIFO_LEN). Only when UART_HW_FLOWCTRL_RTS is set, will the rx_thresh value be set.

Returns

- ESP_OK Success
- ESP_FAIL Parameter error

esp_err_t **uart_set_sw_flow_ctrl** (*uart_port_t* uart_num, bool enable, uint8_t rx_thresh_xon, uint8_t rx_thresh_xoff)

Set software flow control.

Parameters

- **uart_num** –UART_NUM_0, UART_NUM_1 or UART_NUM_2
- **enable** –switch on or off
- **rx_thresh_xon** –low water mark
- **rx_thresh_xoff** –high water mark

Returns

- ESP_OK Success
- ESP_FAIL Parameter error

esp_err_t **uart_get_hw_flow_ctrl** (*uart_port_t* uart_num, *uart_hw_flowcontrol_t* *flow_ctrl)

Get the UART hardware flow control configuration.

Parameters

- **uart_num** –UART port number, the max port number is (UART_NUM_MAX -1).
- **flow_ctrl** –Option for different flow control mode.

Returns

- ESP_FAIL Parameter error
- ESP_OK Success, result will be put in (*flow_ctrl)

esp_err_t **uart_clear_intr_status** (*uart_port_t* uart_num, uint32_t clr_mask)

Clear UART interrupt status.

Parameters

- **uart_num** –UART port number, the max port number is (UART_NUM_MAX -1).
- **clr_mask** –Bit mask of the interrupt status to be cleared.

Returns

- ESP_OK Success
- ESP_FAIL Parameter error

esp_err_t **uart_enable_intr_mask** (*uart_port_t* uart_num, uint32_t enable_mask)

Set UART interrupt enable.

Parameters

- **uart_num** –UART port number, the max port number is (UART_NUM_MAX -1).

- **enable_mask** –Bit mask of the enable bits.

Returns

- ESP_OK Success
- ESP_FAIL Parameter error

esp_err_t **uart_disable_intr_mask**(*uart_port_t* uart_num, uint32_t disable_mask)

Clear UART interrupt enable bits.

Parameters

- **uart_num** –UART port number, the max port number is (UART_NUM_MAX -1).
- **disable_mask** –Bit mask of the disable bits.

Returns

- ESP_OK Success
- ESP_FAIL Parameter error

esp_err_t **uart_enable_rx_intr**(*uart_port_t* uart_num)

Enable UART RX interrupt (RX_FULL & RX_TIMEOUT INTERRUPT)

Parameters **uart_num** –UART port number, the max port number is (UART_NUM_MAX -1).

Returns

- ESP_OK Success
- ESP_FAIL Parameter error

esp_err_t **uart_disable_rx_intr**(*uart_port_t* uart_num)

Disable UART RX interrupt (RX_FULL & RX_TIMEOUT INTERRUPT)

Parameters **uart_num** –UART port number, the max port number is (UART_NUM_MAX -1).

Returns

- ESP_OK Success
- ESP_FAIL Parameter error

esp_err_t **uart_disable_tx_intr**(*uart_port_t* uart_num)

Disable UART TX interrupt (TXFIFO_EMPTY INTERRUPT)

Parameters **uart_num** –UART port number

Returns

- ESP_OK Success
- ESP_FAIL Parameter error

esp_err_t **uart_enable_tx_intr**(*uart_port_t* uart_num, int enable, int thresh)

Enable UART TX interrupt (TXFIFO_EMPTY INTERRUPT)

Parameters

- **uart_num** –UART port number, the max port number is (UART_NUM_MAX -1).
- **enable** –1: enable; 0: disable
- **thresh** –Threshold of TX interrupt, 0 ~ UART_FIFO_LEN

Returns

- ESP_OK Success
- ESP_FAIL Parameter error

esp_err_t **uart_isr_register**(*uart_port_t* uart_num, void (*fn)(void*), void *arg, int intr_alloc_flags, *uart_isr_handle_t* *handle)

Register UART interrupt handler (ISR).

Note: UART ISR handler will be attached to the same CPU core that this function is running on.

Parameters

- **uart_num** –UART port number, the max port number is (UART_NUM_MAX -1).
- **fn** –Interrupt handler function.
- **arg** –parameter for handler function

- **intr_alloc_flags** –Flags used to allocate the interrupt. One or multiple (ORred) ESP_INTR_FLAG_* values. See esp_intr_alloc.h for more info.
- **handle** –Pointer to return handle. If non-NULL, a handle for the interrupt will be returned here.

Returns

- ESP_OK Success
- ESP_FAIL Parameter error

esp_err_t **uart_isr_free**(*uart_port_t* uart_num)

Free UART interrupt handler registered by uart_isr_register. Must be called on the same core as uart_isr_register was called.

Parameters **uart_num** –UART port number, the max port number is (UART_NUM_MAX -1).

Returns

- ESP_OK Success
- ESP_FAIL Parameter error

esp_err_t **uart_set_pin**(*uart_port_t* uart_num, int tx_io_num, int rx_io_num, int rts_io_num, int cts_io_num)

Assign signals of a UART peripheral to GPIO pins.

Note: If the GPIO number configured for a UART signal matches one of the IOMUX signals for that GPIO, the signal will be connected directly via the IOMUX. Otherwise the GPIO and signal will be connected via the GPIO Matrix. For example, if on an ESP32 the call `uart_set_pin(0, 1, 3, -1, -1)` is performed, as GPIO1 is UART0's default TX pin and GPIO3 is UART0's default RX pin, both will be connected to respectively U0TXD and U0RXD through the IOMUX, totally bypassing the GPIO matrix. The check is performed on a per-pin basis. Thus, it is possible to have RX pin binded to a GPIO through the GPIO matrix, whereas TX is binded to its GPIO through the IOMUX.

Note: Internal signal can be output to multiple GPIO pads. Only one GPIO pad can connect with input signal.

Parameters

- **uart_num** –UART port number, the max port number is (UART_NUM_MAX -1).
- **tx_io_num** –UART TX pin GPIO number.
- **rx_io_num** –UART RX pin GPIO number.
- **rts_io_num** –UART RTS pin GPIO number.
- **cts_io_num** –UART CTS pin GPIO number.

Returns

- ESP_OK Success
- ESP_FAIL Parameter error

esp_err_t **uart_set_rts**(*uart_port_t* uart_num, int level)

Manually set the UART RTS pin level.

Note: UART must be configured with hardware flow control disabled.

Parameters

- **uart_num** –UART port number, the max port number is (UART_NUM_MAX -1).
- **level** –1: RTS output low (active); 0: RTS output high (block)

Returns

- ESP_OK Success
- ESP_FAIL Parameter error

esp_err_t **uart_set_dtr** (*uart_port_t* uart_num, int level)

Manually set the UART DTR pin level.

Parameters

- **uart_num** –UART port number, the max port number is (UART_NUM_MAX -1).
- **level** –1: DTR output low; 0: DTR output high

Returns

- ESP_OK Success
- ESP_FAIL Parameter error

esp_err_t **uart_set_tx_idle_num** (*uart_port_t* uart_num, uint16_t idle_num)

Set UART idle interval after tx FIFO is empty.

Parameters

- **uart_num** –UART port number, the max port number is (UART_NUM_MAX -1).
- **idle_num** –idle interval after tx FIFO is empty(unit: the time it takes to send one bit under current baudrate)

Returns

- ESP_OK Success
- ESP_FAIL Parameter error

esp_err_t **uart_param_config** (*uart_port_t* uart_num, const *uart_config_t* *uart_config)

Set UART configuration parameters.

Parameters

- **uart_num** –UART port number, the max port number is (UART_NUM_MAX -1).
- **uart_config** –UART parameter settings

Returns

- ESP_OK Success
- ESP_FAIL Parameter error

esp_err_t **uart_intr_config** (*uart_port_t* uart_num, const *uart_intr_config_t* *intr_conf)

Configure UART interrupts.

Parameters

- **uart_num** –UART port number, the max port number is (UART_NUM_MAX -1).
- **intr_conf** –UART interrupt settings

Returns

- ESP_OK Success
- ESP_FAIL Parameter error

esp_err_t **uart_wait_tx_done** (*uart_port_t* uart_num, TickType_t ticks_to_wait)

Wait until UART TX FIFO is empty.

Parameters

- **uart_num** –UART port number, the max port number is (UART_NUM_MAX -1).
- **ticks_to_wait** –Timeout, count in RTOS ticks

Returns

- ESP_OK Success
- ESP_FAIL Parameter error
- ESP_ERR_TIMEOUT Timeout

int **uart_tx_chars** (*uart_port_t* uart_num, const char *buffer, uint32_t len)

Send data to the UART port from a given buffer and length.

This function will not wait for enough space in TX FIFO. It will just fill the available TX FIFO and return when the FIFO is full.

Note: This function should only be used when UART TX buffer is not enabled.

Parameters

- **uart_num** –UART port number, the max port number is (UART_NUM_MAX -1).
- **buffer** –data buffer address
- **len** –data length to send

Returns

- (-1) Parameter error
- OTHERS (>=0) The number of bytes pushed to the TX FIFO

int **uart_write_bytes**(*uart_port_t* uart_num, const void *src, size_t size)

Send data to the UART port from a given buffer and length,.

If the UART driver's parameter 'tx_buffer_size' is set to zero: This function will not return until all the data have been sent out, or at least pushed into TX FIFO.

Otherwise, if the 'tx_buffer_size' > 0, this function will return after copying all the data to tx ring buffer, UART ISR will then move data from the ring buffer to TX FIFO gradually.

Parameters

- **uart_num** –UART port number, the max port number is (UART_NUM_MAX -1).
- **src** –data buffer address
- **size** –data length to send

Returns

- (-1) Parameter error
- OTHERS (>=0) The number of bytes pushed to the TX FIFO

int **uart_write_bytes_with_break**(*uart_port_t* uart_num, const void *src, size_t size, int brk_len)

Send data to the UART port from a given buffer and length,.

If the UART driver's parameter 'tx_buffer_size' is set to zero: This function will not return until all the data and the break signal have been sent out. After all data is sent out, send a break signal.

Otherwise, if the 'tx_buffer_size' > 0, this function will return after copying all the data to tx ring buffer, UART ISR will then move data from the ring buffer to TX FIFO gradually. After all data sent out, send a break signal.

Parameters

- **uart_num** –UART port number, the max port number is (UART_NUM_MAX -1).
- **src** –data buffer address
- **size** –data length to send
- **brk_len** –break signal duration(unit: the time it takes to send one bit at current baudrate)

Returns

- (-1) Parameter error
- OTHERS (>=0) The number of bytes pushed to the TX FIFO

int **uart_read_bytes**(*uart_port_t* uart_num, void *buf, uint32_t length, TickType_t ticks_to_wait)

UART read bytes from UART buffer.

Parameters

- **uart_num** –UART port number, the max port number is (UART_NUM_MAX -1).
- **buf** –pointer to the buffer.
- **length** –data length
- **ticks_to_wait** –sTimeout, count in RTOS ticks

Returns

- (-1) Error
- OTHERS (>=0) The number of bytes read from UART FIFO

esp_err_t **uart_flush**(*uart_port_t* uart_num)

Alias of uart_flush_input. UART ring buffer flush. This will discard all data in the UART RX buffer.

Note: Instead of waiting the data sent out, this function will clear UART rx buffer. In order to send all the data in tx FIFO, we can use uart_wait_tx_done function.

Parameters **uart_num** –UART port number, the max port number is (UART_NUM_MAX -1).
Returns
- ESP_OK Success
- ESP_FAIL Parameter error

esp_err_t **uart_flush_input** (*uart_port_t* uart_num)

Clear input buffer, discard all the data is in the ring-buffer.

Note: In order to send all the data in tx FIFO, we can use uart_wait_tx_done function.

Parameters **uart_num** –UART port number, the max port number is (UART_NUM_MAX -1).
Returns
- ESP_OK Success
- ESP_FAIL Parameter error

esp_err_t **uart_get_buffered_data_len** (*uart_port_t* uart_num, size_t *size)

UART get RX ring buffer cached data length.

Parameters
- **uart_num** –UART port number, the max port number is (UART_NUM_MAX -1).
- **size** –Pointer of size_t to accept cached data length

Returns
- ESP_OK Success
- ESP_FAIL Parameter error

esp_err_t **uart_get_tx_buffer_free_size** (*uart_port_t* uart_num, size_t *size)

UART get TX ring buffer free space size.

Parameters
- **uart_num** –UART port number, the max port number is (UART_NUM_MAX -1).
- **size** –Pointer of size_t to accept the free space size

Returns
- ESP_OK Success
- ESP_ERR_INVALID_ARG Parameter error

esp_err_t **uart_disable_pattern_det_intr** (*uart_port_t* uart_num)

UART disable pattern detect function. Designed for applications like ‘AT commands’. When the hardware detects a series of one same character, the interrupt will be triggered.

Parameters **uart_num** –UART port number, the max port number is (UART_NUM_MAX -1).
Returns
- ESP_OK Success
- ESP_FAIL Parameter error

esp_err_t **uart_enable_pattern_det_intr** (*uart_port_t* uart_num, char pattern_chr, uint8_t chr_num, int chr_tout, int post_idle, int pre_idle)

UART enable pattern detect function. Designed for applications like ‘AT commands’. When the hardware detect a series of one same character, the interrupt will be triggered.

Note: This function only works for esp32. And this function is deprecated, please use uart_enable_pattern_det_baud_intr instead.

Parameters
- **uart_num** –UART port number.
- **pattern_chr** –character of the pattern.
- **chr_num** –number of the character, 8bit value.

- **chr_tout** –timeout of the interval between each pattern characters, 24bit value, unit is APB (80Mhz) clock cycle. When the duration is less than this value, it will not take this data as at_cmd char.
- **post_idle** –idle time after the last pattern character, 24bit value, unit is APB (80Mhz) clock cycle. When the duration is less than this value, it will not take the previous data as the last at_cmd char
- **pre_idle** –idle time before the first pattern character, 24bit value, unit is APB (80Mhz) clock cycle. When the duration is less than this value, it will not take this data as the first at_cmd char.

Returns

- ESP_OK Success
- ESP_FAIL Parameter error

esp_err_t **uart_enable_pattern_det_baud_intr**(*uart_port_t* uart_num, char pattern_chr, uint8_t chr_num, int chr_tout, int post_idle, int pre_idle)

UART enable pattern detect function. Designed for applications like ‘AT commands’. When the hardware detect a series of one same character, the interrupt will be triggered.

Parameters

- **uart_num** –UART port number.
- **pattern_chr** –character of the pattern.
- **chr_num** –number of the character, 8bit value.
- **chr_tout** –timeout of the interval between each pattern characters, 16bit value, unit is the baud-rate cycle you configured. When the duration is more than this value, it will not take this data as at_cmd char.
- **post_idle** –idle time after the last pattern character, 16bit value, unit is the baud-rate cycle you configured. When the duration is less than this value, it will not take the previous data as the last at_cmd char
- **pre_idle** –idle time before the first pattern character, 16bit value, unit is the baud-rate cycle you configured. When the duration is less than this value, it will not take this data as the first at_cmd char.

Returns

- ESP_OK Success
- ESP_FAIL Parameter error

int **uart_pattern_pop_pos**(*uart_port_t* uart_num)

Return the nearest detected pattern position in buffer. The positions of the detected pattern are saved in a queue, this function will dequeue the first pattern position and move the pointer to next pattern position.

The following APIs will modify the pattern position info: uart_flush_input, uart_read_bytes, uart_driver_delete, uart_pop_pattern_pos It is the application’s responsibility to ensure atomic access to the pattern queue and the rx data buffer when using pattern detect feature.

Note: If the RX buffer is full and flow control is not enabled, the detected pattern may not be found in the rx buffer due to overflow.

Parameters **uart_num** –UART port number, the max port number is (UART_NUM_MAX -1).

Returns

- (-1) No pattern found for current index or parameter error
- others the pattern position in rx buffer.

int **uart_pattern_get_pos**(*uart_port_t* uart_num)

Return the nearest detected pattern position in buffer. The positions of the detected pattern are saved in a queue, This function do nothing to the queue.

The following APIs will modify the pattern position info: uart_flush_input, uart_read_bytes, uart_driver_delete, uart_pop_pattern_pos It is the application's responsibility to ensure atomic access to the pattern queue and the rx data buffer when using pattern detect feature.

Note: If the RX buffer is full and flow control is not enabled, the detected pattern may not be found in the rx buffer due to overflow.

Parameters **uart_num** –UART port number, the max port number is (UART_NUM_MAX -1).

Returns

- (-1) No pattern found for current index or parameter error
- others the pattern position in rx buffer.

esp_err_t **uart_pattern_queue_reset** (*uart_port_t* uart_num, int queue_length)

Allocate a new memory with the given length to save record the detected pattern position in rx buffer.

Parameters

- **uart_num** –UART port number, the max port number is (UART_NUM_MAX -1).
- **queue_length** –Max queue length for the detected pattern. If the queue length is not large enough, some pattern positions might be lost. Set this value to the maximum number of patterns that could be saved in data buffer at the same time.

Returns

- ESP_ERR_NO_MEM No enough memory
- ESP_ERR_INVALID_STATE Driver not installed
- ESP_FAIL Parameter error
- ESP_OK Success

esp_err_t **uart_set_mode** (*uart_port_t* uart_num, *uart_mode_t* mode)

UART set communication mode.

Note: This function must be executed after uart_driver_install(), when the driver object is initialized.

Parameters

- **uart_num** –Uart number to configure, the max port number is (UART_NUM_MAX -1).
- **mode** –UART UART mode to set

Returns

- ESP_OK Success
- ESP_ERR_INVALID_ARG Parameter error

esp_err_t **uart_set_rx_full_threshold** (*uart_port_t* uart_num, int threshold)

Set uart threshold value for RX fifo full.

Note: If application is using higher baudrate and it is observed that bytes in hardware RX fifo are overwritten then this threshold can be reduced

---

Parameters

- **uart_num** –UART_NUM_0, UART_NUM_1 or UART_NUM_2
- **threshold** –Threshold value above which RX fifo full interrupt is generated

Returns

- ESP_OK Success
- ESP_ERR_INVALID_ARG Parameter error
- ESP_ERR_INVALID_STATE Driver is not installed

esp_err_t **uart_set_tx_empty_threshold**(*uart_port_t* uart_num, int threshold)

Set uart threshold values for TX fifo empty.

Parameters

- **uart_num** –UART_NUM_0, UART_NUM_1 or UART_NUM_2
- **threshold** –Threshold value below which TX fifo empty interrupt is generated

Returns

- ESP_OK Success
- ESP_ERR_INVALID_ARG Parameter error
- ESP_ERR_INVALID_STATE Driver is not installed

esp_err_t **uart_set_rx_timeout**(*uart_port_t* uart_num, const uint8_t tout_thresh)

UART set threshold timeout for TOUT feature.

Parameters

- **uart_num** –Uart number to configure, the max port number is (UART_NUM_MAX -1).
- **tout_thresh** –This parameter defines timeout threshold in uart symbol periods. The maximum value of threshold is 126. tout_thresh = 1, defines TOUT interrupt timeout equal to transmission time of one symbol (~11 bit) on current baudrate. If the time is expired the UART_RXFIFO_TOUT_INT interrupt is triggered. If tout_thresh == 0, the TOUT feature is disabled.

Returns

- ESP_OK Success
- ESP_ERR_INVALID_ARG Parameter error
- ESP_ERR_INVALID_STATE Driver is not installed

esp_err_t **uart_get_collision_flag**(*uart_port_t* uart_num, bool *collision_flag)

Returns collision detection flag for RS485 mode Function returns the collision detection flag into variable pointed by collision_flag. *collision_flag = true, if collision detected else it is equal to false. This function should be executed when actual transmission is completed (after uart_write_bytes()).

Parameters

- **uart_num** –Uart number to configure the max port number is (UART_NUM_MAX -1).
- **collision_flag** –Pointer to variable of type bool to return collision flag.

Returns

- ESP_OK Success
- ESP_ERR_INVALID_ARG Parameter error

esp_err_t **uart_set_wakeup_threshold**(*uart_port_t* uart_num, int wakeup_threshold)

Set the number of RX pin signal edges for light sleep wakeup.

UART can be used to wake up the system from light sleep. This feature works by counting the number of positive edges on RX pin and comparing the count to the threshold. When the count exceeds the threshold, system is woken up from light sleep. This function allows setting the threshold value.

Stop bit and parity bits (if enabled) also contribute to the number of edges. For example, letter ‘a’ with ASCII code 97 is encoded as 0100001101 on the wire (with 8n1 configuration), start and stop bits included. This sequence has 3 positive edges (transitions from 0 to 1). Therefore, to wake up the system when ‘a’ is sent, set wakeup_threshold=3.

The character that triggers wakeup is not received by UART (i.e. it can not be obtained from UART FIFO). Depending on the baud rate, a few characters after that will also not be received. Note that when the chip enters and exits light sleep mode, APB frequency will be changing. To make sure that UART has correct baud rate all the time, select REF_TICK as UART clock source, by setting use_ref_tick field in *uart_config_t* to true.

Note: in ESP32, the wakeup signal can only be input via IO_MUX (i.e. GPIO3 should be configured as function_1 to wake up UART0, GPIO9 should be configured as function_5 to wake up UART1), UART2 does not support light sleep wakeup feature.

Parameters
- **uart_num** –UART number, the max port number is (UART_NUM_MAX -1).
- **wakeup_threshold** –number of RX edges for light sleep wakeup, value is 3 .. 0x3ff.

Returns
- ESP_OK on success
- ESP_ERR_INVALID_ARG if uart_num is incorrect or wakeup_threshold is outside of [3, 0x3ff] range.

esp_err_t **uart_get_wakeup_threshold** (*uart_port_t* uart_num, int *out_wakeup_threshold)

Get the number of RX pin signal edges for light sleep wakeup.

See description of uart_set_wakeup_threshold for the explanation of UART wakeup feature.

Parameters
- **uart_num** –UART number, the max port number is (UART_NUM_MAX -1).
- **out_wakeup_threshold** –**[out]** output, set to the current value of wakeup threshold for the given UART.

Returns
- ESP_OK on success
- ESP_ERR_INVALID_ARG if out_wakeup_threshold is NULL

esp_err_t **uart_wait_tx_idle_polling** (*uart_port_t* uart_num)

Wait until UART tx memory empty and the last char send ok (polling mode).

-

Returns
- ESP_OK on success
- ESP_ERR_INVALID_ARG Parameter error
- ESP_FAIL Driver not installed

Parameters **uart_num** –UART number

esp_err_t **uart_set_loop_back** (*uart_port_t* uart_num, bool loop_back_en)

Configure TX signal loop back to RX module, just for the test usage.

-

Returns
- ESP_OK on success
- ESP_ERR_INVALID_ARG Parameter error
- ESP_FAIL Driver not installed

Parameters
- **uart_num** –UART number
- **loop_back_en** –Set ture to enable the loop back function, else set it false.

void **uart_set_always_rx_timeout** (*uart_port_t* uart_num, bool always_rx_timeout_en)

Configure behavior of UART RX timeout interrupt.

When always_rx_timeout is true, timeout interrupt is triggered even if FIFO is full. This function can cause extra timeout interrupts triggered only to send the timeout event. Call this function only if you want to ensure timeout interrupt will always happen after a byte stream.

Parameters
- **uart_num** –UART number
- **always_rx_timeout_en** –Set to false enable the default behavior of timeout interrupt, set it to true to always trigger timeout interrupt.

Structures

struct **uart_intr_config_t**

UART interrupt configuration parameters for uart_intr_config function.

Public Members

uint32_t **intr_enable_mask**

UART interrupt enable mask, choose from UART_XXXX_INT_ENA_M under UART_INT_ENA_REG(i), connect with bit-or operator

uint8_t **rx_timeout_thresh**

UART timeout interrupt threshold (unit: time of sending one byte)

uint8_t **txfifo_empty_intr_thresh**

UART TX empty interrupt threshold.

uint8_t **rxfifo_full_thresh**

UART RX full interrupt threshold.

struct **uart_event_t**

Event structure used in UART event queue.

Public Members

uart_event_type_t **type**

UART event type

size_t **size**

UART data size for UART_DATA event

bool **timeout_flag**

UART data read timeout flag for UART_DATA event (no new data received during configured RX TOUT) If the event is caused by FIFO-full interrupt, then there will be no event with the timeout flag before the next byte coming.

Macros

UART_NUM_0

UART port 0

UART_NUM_1

UART port 1

UART_NUM_2

UART port 2

UART_NUM_MAX

UART port max

UART_PIN_NO_CHANGE

UART_FIFO_LEN

Length of the UART HW FIFO.

UART_BITRATE_MAX

Maximum configurable bitrate.

Type Definitions

typedef *intr_handle_t* **uart_isr_handle_t**

Enumerations

enum **uart_event_type_t**

UART event types used in the ring buffer.

Values:

enumerator **UART_DATA**

UART data event

enumerator **UART_BREAK**

UART break event

enumerator **UART_BUFFER_FULL**

UART RX buffer full event

enumerator **UART_FIFO_OVF**

UART FIFO overflow event

enumerator **UART_FRAME_ERR**

UART RX frame error event

enumerator **UART_PARITY_ERR**

UART RX parity event

enumerator **UART_DATA_BREAK**

UART TX data and break event

enumerator **UART_PATTERN_DET**

UART pattern detected

enumerator **UART_EVENT_MAX**

UART event max index

Header File

- components/hal/include/hal/uart_types.h

Structures

struct **uart_at_cmd_t**

UART AT cmd char configuration parameters Note that this function may different on different chip. Please refer to the TRM at confirguration.

Public Members

uint8_t **cmd_char**

UART AT cmd char

uint8_t **char_num**

AT cmd char repeat number

uint32_t **gap_tout**

gap time(in baud-rate) between AT cmd char

uint32_t **pre_idle**

the idle time(in baud-rate) between the non AT char and first AT char

uint32_t **post_idle**

the idle time(in baud-rate) between the last AT char and the none AT char

struct **uart_sw_flowctrl_t**

UART software flow control configuration parameters.

Public Members

uint8_t **xon_char**

Xon flow control char

uint8_t **xoff_char**

Xoff flow control char

uint8_t **xon_thrd**

If the software flow control is enabled and the data amount in rxfifo is less than xon_thrd, an xon_char will be sent

uint8_t **xoff_thrd**

If the software flow control is enabled and the data amount in rxfifo is more than xoff_thrd, an xoff_char will be sent

struct **uart_config_t**

UART configuration parameters for uart_param_config function.

Public Members

int **baud_rate**

UART baud rate

uart_word_length_t **data_bits**

UART byte size

uart_parity_t **parity**

UART parity mode

uart_stop_bits_t **stop_bits**

UART stop bits

uart_hw_flowcontrol_t **flow_ctrl**

UART HW flow control mode (cts/rts)

uint8_t **rx_flow_ctrl_thresh**

UART HW RTS threshold

uart_sclk_t **source_clk**

UART source clock selection

bool **use_ref_tick**

Deprecated method to select ref tick clock source, set source_clk field instead

Type Definitions

typedef int **uart_port_t**

UART port number, can be UART_NUM_0 ~ (UART_NUM_MAX -1).

Enumerations

enum **uart_mode_t**

UART mode selection.

Values:

enumerator **UART_MODE_UART**

mode: regular UART mode

enumerator **UART_MODE_RS485_HALF_DUPLEX**

mode: half duplex RS485 UART mode control by RTS pin

enumerator **UART_MODE_IRDA**

mode: IRDA UART mode

enumerator **UART_MODE_RS485_COLLISION_DETECT**

mode: RS485 collision detection UART mode (used for test purposes)

enumerator **UART_MODE_RS485_APP_CTRL**

mode: application control RS485 UART mode (used for test purposes)

enum **uart_word_length_t**

UART word length constants.

Values:

enumerator **UART_DATA_5_BITS**

word length: 5bits

enumerator **UART_DATA_6_BITS**

word length: 6bits

enumerator **UART_DATA_7_BITS**

word length: 7bits

enumerator **UART_DATA_8_BITS**

word length: 8bits

enumerator **UART_DATA_BITS_MAX**

enum **uart_stop_bits_t**

UART stop bits number.

Values:

enumerator **UART_STOP_BITS_1**

stop bit: 1bit

enumerator **UART_STOP_BITS_1_5**

stop bit: 1.5bits

enumerator **UART_STOP_BITS_2**

stop bit: 2bits

enumerator **UART_STOP_BITS_MAX**

enum **uart_parity_t**

UART parity constants.

Values:

enumerator **UART_PARITY_DISABLE**

Disable UART parity

enumerator **UART_PARITY_EVEN**

Enable UART even parity

enumerator **UART_PARITY_ODD**

Enable UART odd parity

enum **uart_hw_flowcontrol_t**

UART hardware flow control modes.

Values:

enumerator **UART_HW_FLOWCTRL_DISABLE**

disable hardware flow control

enumerator **UART_HW_FLOWCTRL_RTS**

enable RX hardware flow control (rts)

enumerator **UART_HW_FLOWCTRL_CTS**

enable TX hardware flow control (cts)

enumerator **UART_HW_FLOWCTRL_CTS_RTS**

enable hardware flow control

enumerator **UART_HW_FLOWCTRL_MAX**

enum **uart_signal_inv_t**

UART signal bit map.

Values:

enumerator **UART_SIGNAL_INV_DISABLE**

Disable UART signal inverse

enumerator **UART_SIGNAL_IRDA_TX_INV**

inverse the UART irda_tx signal

enumerator **UART_SIGNAL_IRDA_RX_INV**

inverse the UART irda_rx signal

enumerator **UART_SIGNAL_RXD_INV**

inverse the UART rxd signal

enumerator **UART_SIGNAL_CTS_INV**

inverse the UART cts signal

enumerator **UART_SIGNAL_DSR_INV**

inverse the UART dsr signal

enumerator **UART_SIGNAL_TXD_INV**

inverse the UART txd signal

enumerator **UART_SIGNAL_RTS_INV**

inverse the UART rts signal

enumerator **UART_SIGNAL_DTR_INV**

inverse the UART dtr signal

enum **uart_sclk_t**

UART source clock.

Values:

enumerator **UART_SCLK_APB**

UART source clock from APB

enumerator **UART_SCLK_REF_TICK**

UART source clock from REF_TICK

GPIO Lookup Macros The UART peripherals have dedicated IO_MUX pins to which they are connected directly. However, signals can also be routed to other pins using the less direct GPIO matrix. To use direct routes, you need to know which pin is a dedicated IO_MUX pin for a UART channel. GPIO Lookup Macros simplify the process of finding and assigning IO_MUX pins. You choose a macro based on either the IO_MUX pin number, or a required UART channel name, and the macro will return the matching counterpart for you. See some examples below.

Note: These macros are useful if you need very high UART baud rates (over 40 MHz), which means you will have to use IO_MUX pins only. In other cases, these macros can be ignored, and you can use the GPIO Matrix as it allows you to configure any GPIO pin for any UART function.

---

1. *UART_NUM_2_TXD_DIRECT_GPIO_NUM* returns the IO_MUX pin number of UART channel 2 TXD pin (pin 17)
2. *UART_GPIO19_DIRECT_CHANNEL* returns the UART number of GPIO 19 when connected to the UART peripheral via IO_MUX (this is UART_NUM_0)
3. *UART_CTS_GPIO19_DIRECT_CHANNEL* returns the UART number of GPIO 19 when used as the UART CTS pin via IO_MUX (this is UART_NUM_0). Similar to the above macro but specifies the pin function which is also part of the IO_MUX assignment.

Header File

- components/soc/esp32/include/soc/uart_channel.h

Macros

UART_GPIO1_DIRECT_CHANNEL

UART_NUM_0_TXD_DIRECT_GPIO_NUM

UART_GPIO3_DIRECT_CHANNEL

UART_NUM_0_RXD_DIRECT_GPIO_NUM

UART_GPIO19_DIRECT_CHANNEL

UART_NUM_0_CTS_DIRECT_GPIO_NUM

UART_GPIO22_DIRECT_CHANNEL

UART_NUM_0_RTS_DIRECT_GPIO_NUM

UART_TXD_GPIO1_DIRECT_CHANNEL

UART_RXD_GPIO3_DIRECT_CHANNEL

UART_CTS_GPIO19_DIRECT_CHANNEL

UART_RTS_GPIO22_DIRECT_CHANNEL

UART_GPIO10_DIRECT_CHANNEL

UART_NUM_1_TXD_DIRECT_GPIO_NUM

UART_GPIO9_DIRECT_CHANNEL

UART_NUM_1_RXD_DIRECT_GPIO_NUM

UART_GPIO6_DIRECT_CHANNEL

UART_NUM_1_CTS_DIRECT_GPIO_NUM

UART_GPIO11_DIRECT_CHANNEL

UART_NUM_1_RTS_DIRECT_GPIO_NUM

UART_TXD_GPIO10_DIRECT_CHANNEL

UART_RXD_GPIO9_DIRECT_CHANNEL

UART_CTS_GPIO6_DIRECT_CHANNEL

UART_RTS_GPIO11_DIRECT_CHANNEL

UART_GPIO17_DIRECT_CHANNEL

UART_NUM_2_TXD_DIRECT_GPIO_NUM

UART_GPIO16_DIRECT_CHANNEL

UART_NUM_2_RXD_DIRECT_GPIO_NUM

UART_GPIO8_DIRECT_CHANNEL

UART_NUM_2_CTS_DIRECT_GPIO_NUM

UART_GPIO7_DIRECT_CHANNEL

UART_NUM_2_RTS_DIRECT_GPIO_NUM

UART_TXD_GPIO17_DIRECT_CHANNEL

UART_RXD_GPIO16_DIRECT_CHANNEL

UART_CTS_GPIO8_DIRECT_CHANNEL

UART_RTS_GPIO7_DIRECT_CHANNEL

Code examples for this API section are provided in the peripherals directory of ESP-IDF examples.

2.4 Application Protocols

2.4.1 ASIO port

Overview

Asio is a cross-platform C++ library, see https://think-async.com. It provides a consistent asynchronous model using a modern C++ approach.

ASIO documentation Please refer to the original asio documentation at https://think-async.com/Asio/Documentation. Asio also comes with a number of examples which could be find under Documentation/Examples on that web site.

Supported features ESP platform port currently supports only network asynchronous socket operations; does not support serial port. SSL/TLS support is disabled by default and could be enabled in component configuration menu by choosing TLS library from

- mbedTLS with OpenSSL translation layer (default option)
- wolfSSL

SSL support is very basic at this stage and it does include following features:

- Verification callbacks
- DH property files
- Certificates/private keys file APIs

Internal asio settings for ESP include

- EXCEPTIONS are enabled in ASIO if enabled in menuconfig
- TYPEID is enabled in ASIO if enabled in menuconfig

Application Example

ESP examples are based on standard asio protocols/asio:

- protocols/asio/udp_echo_server
- protocols/asio/tcp_echo_server
- protocols/asio/asio_chat
- protocols/asio/ssl_client_server

Please refer to the specific example README.md for details

2.4.2 ESP-MQTT

Overview

ESP-MQTT is an implementation of MQTT protocol client (MQTT is a lightweight publish/subscribe messaging protocol).

Features

- Supports MQTT over TCP, SSL with mbedtls, MQTT over Websocket, MQTT over Websocket Secure.
- Easy to setup with URI
- Multiple instances (Multiple clients in one application)
- Support subscribing, publishing, authentication, last will messages, keep alive pings and all 3 QoS levels (it should be a fully functional client).

Application Example

- protocols/mqtt/tcp: MQTT over tcp, default port 1883
- protocols/mqtt/ssl: MQTT over tcp, default port 8883
- protocols/mqtt/ssl_psk: MQTT over tcp using pre-shared keys for authentication, default port 8883
- protocols/mqtt/ws: MQTT over Websocket, default port 80
- protocols/mqtt/wss: MQTT over Websocket Secure, default port 443

Configuration

URI

- Curently support `mqtt`, `mqtts`, `ws`, `wss` schemes
- MQTT over TCP samples:
  - `mqtt://mqtt.eclipseprojects.io`: MQTT over TCP, default port 1883:
  - `mqtt://mqtt.eclipseprojects.io:1884` MQTT over TCP, port 1884:
  - `mqtt://username:password@mqtt.eclipseprojects.io:1884` MQTT over TCP, port 1884, with username and password
- MQTT over SSL samples:
  - `mqtts://mqtt.eclipseprojects.io`: MQTT over SSL, port 8883
  - `mqtts://mqtt.eclipseprojects.io:8884`: MQTT over SSL, port 8884
- MQTT over Websocket samples:
  - `ws://mqtt.eclipseprojects.io:80/mqtt`
- MQTT over Websocket Secure samples:
  - `wss://mqtt.eclipseprojects.io:443/mqtt`
- Minimal configurations:

```
const esp_mqtt_client_config_t mqtt_cfg = {
    .uri = "mqtt://mqtt.eclipseprojects.io",
    // .user_context = (void *)your_context
};
esp_mqtt_client_handle_t client = esp_mqtt_client_init(&mqtt_cfg);
esp_mqtt_client_register_event(client, ESP_EVENT_ANY_ID, mqtt_event_handler,␣
↪client);
esp_mqtt_client_start(client);
```

- Note: By default mqtt client uses event loop library to post related mqtt events (connected, subscribed, published, etc.)

SSL

- Get certificate from server, example: `mqtt.eclipseprojects.io openssl s_client -showcerts -connect mqtt.eclipseprojects.io:8883 </dev/null 2>/dev/null|openssl x509 -outform PEM >mqtt_eclipse_org.pem`
- Check the sample application: `examples/mqtt_ssl`
- Configuration:

```
const esp_mqtt_client_config_t mqtt_cfg = {
    .uri = "mqtts://mqtt.eclipseprojects.io:8883",
    .event_handle = mqtt_event_handler,
    .cert_pem = (const char *)mqtt_eclipse_org_pem_start,
};
```

If the certificate is not null-terminated then `cert_len` should also be set. Other SSL related configuration parameters are:

- `use_global_ca_store`: use the global certificate store to verify server certificate, see `esp-tls.h` for more information
- `client_cert_pem`: pointer to certificate data in PEM or DER format for SSL mutual authentication, default is NULL, not required if mutual authentication is not needed.
- `client_cert_len`: length of the buffer pointed to by client_cert_pem. May be 0 for null-terminated pem.
- `client_key_pem`: pointer to private key data in PEM or DER format for SSL mutual authentication, default is NULL, not required if mutual authentication is not needed.
- `client_key_len`: length of the buffer pointed to by client_key_pem. May be 0 for null-terminated pem.
- `psk_hint_key`: pointer to PSK struct defined in esp_tls.h to enable PSK authentication (as alternative to certificate verification). If not NULL and server/client certificates are NULL, PSK is enabled
- `alpn_protos`: NULL-terminated list of protocols to be used for ALPN.

Last Will and Testament MQTT allows for a last will and testament (LWT) message to notify other clients when a client ungracefully disconnects. This is configured by the following fields in the `esp_mqtt_client_config_t`-struct.

- `lwt_topic`: pointer to the LWT message topic
- `lwt_msg`: pointer to the LWT message
- `lwt_msg_len`: length of the LWT message, required if `lwt_msg` is not null-terminated
- `lwt_qos`: quality of service for the LWT message
- `lwt_retain`: specifies the retain flag of the LWT message

Other Configuration Parameters

- `disable_clean_session`: determines the clean session flag for the connect message, defaults to a clean session
- `keepalive`: determines how many seconds the client will wait for a ping response before disconnecting, default is 120 seconds.
- `disable_auto_reconnect`: enable to stop the client from reconnecting to server after errors or disconnects
- `user_context`: custom context that will be passed to the event handler
- `task_prio`: MQTT task priority, defaults to 5
- `task_stack`: MQTT task stack size, defaults to 6144 bytes, setting this will override setting from menuconfig
- `buffer_size`: size of MQTT send/receive buffer, default is 1024 bytes
- `username`: pointer to the username used for connecting to the broker
- `password`: pointer to the password used for connecting to the broker
- `client_id`: pointer to the client id, defaults to `ESP32_%CHIPID%` where %CHIPID% are the last 3 bytes of MAC address in hex format
- `host`: MQTT broker domain (ipv4 as string), setting the uri will override this
- `port`: MQTT broker port, specifying the port in the uri will override this
- `transport`: sets the transport protocol, setting the uri will override this

- `refresh_connection_after_ms`: refresh connection after this value (in milliseconds)
- `event_handle`: handle for MQTT events as a callback in legacy mode
- `event_loop_handle`: handle for MQTT event loop library

For more options on `esp_mqtt_client_config_t`, please refer to API reference below

Change settings in Project Configuration Menu The settings for MQTT can be found using `idf.py menuconfig`, under Component config -> ESP-MQTT Configuration

The following settings are available:

- *CONFIG_MQTT_PROTOCOL_311*: Enables 3.1.1 version of MQTT protocol
- *CONFIG_MQTT_TRANSPORT_SSL*, *CONFIG_MQTT_TRANSPORT_WEBSOCKET*: Enables specific MQTT transport layer, such as SSL, WEBSOCKET, WEBSOCKET_SECURE
- *CONFIG_MQTT_CUSTOM_OUTBOX*: Disables default implementation of mqtt_outbox, so a specific implementaion can be supplied

Events

The following events may be posted by the MQTT client:

- `MQTT_EVENT_BEFORE_CONNECT`: The client is initialized and about to start connecting to the broker.
- `MQTT_EVENT_CONNECTED`: The client has successfully established a connection to the broker. The client is now ready to send and receive data.
- `MQTT_EVENT_DISCONNECTED`: The client has aborted the connection due to being unable to read or write data, e.g. because the server is unavailable.
- `MQTT_EVENT_SUBSCRIBED`: The broker has acknowledged the client's subscribe request. The event data will contain the message ID of the subscribe message.
- `MQTT_EVENT_UNSUBSCRIBED`: The broker has acknowledged the client's unsubscribe request. The event data will contain the message ID of the unsubscribe message.
- `MQTT_EVENT_PUBLISHED`: The broker has acknowledged the client's publish message. This will only be posted for Quality of Service level 1 and 2, as level 0 does not use acknowledgements. The event data will contain the message ID of the publish message.
- `MQTT_EVENT_DATA`: The client has received a publish message. The event data contains: message ID, name of the topic it was published to, received data and its length. For data that exceeds the internal buffer multiple *MQTT_EVENT_DATA* will be posted and *current_data_offset* and *total_data_len* from event data updated to keep track of the fragmented message.
- `MQTT_EVENT_ERROR`: The client has encountered an error. *esp_mqtt_error_type_t* from *error_handle* in the event data can be used to further determine the type of the error. The type of error will determine which parts of the *error_handle* struct is filled.

API Reference

Header File

- components/mqtt/esp-mqtt/include/mqtt_client.h

Functions

esp_mqtt_client_handle_t **esp_mqtt_client_init** (const *esp_mqtt_client_config_t* *config)

Creates mqtt client handle based on the configuration.

Parameters **config** –mqtt configuration structure

Returns mqtt_client_handle if successfully created, NULL on error

esp_err_t **esp_mqtt_client_set_uri** (*esp_mqtt_client_handle_t* client, const char *uri)

Sets mqtt connection URI. This API is usually used to overrides the URI configured in esp_mqtt_client_init.

Parameters

- **client** –mqtt client handle

- **uri** –

Returns ESP_FAIL if URI parse error, ESP_OK on success

esp_err_t **esp_mqtt_client_start** (*esp_mqtt_client_handle_t* client)

Starts mqtt client with already created client handle.

Parameters **client** –mqtt client handle
Returns ESP_OK on success ESP_ERR_INVALID_ARG on wrong initialization ESP_FAIL on other error

esp_err_t **esp_mqtt_client_reconnect** (*esp_mqtt_client_handle_t* client)

This api is typically used to force reconnection upon a specific event.

Parameters **client** –mqtt client handle
Returns ESP_OK on success ESP_ERR_INVALID_ARG on wrong initialization ESP_FAIL if client is in invalid state

esp_err_t **esp_mqtt_client_disconnect** (*esp_mqtt_client_handle_t* client)

This api is typically used to force disconnection from the broker.

Parameters **client** –mqtt client handle
Returns ESP_OK on success ESP_ERR_INVALID_ARG on wrong initialization

esp_err_t **esp_mqtt_client_stop** (*esp_mqtt_client_handle_t* client)

Stops mqtt client tasks.

- Notes:
- Cannot be called from the mqtt event handler

Parameters **client** –mqtt client handle
Returns ESP_OK on success ESP_ERR_INVALID_ARG on wrong initialization ESP_FAIL if client is in invalid state

int **esp_mqtt_client_subscribe** (*esp_mqtt_client_handle_t* client, const char *topic, int qos)

Subscribe the client to defined topic with defined qos.

Notes:

- Client must be connected to send subscribe message
- This API is could be executed from a user task or from a mqtt event callback i.e. internal mqtt task (API is protected by internal mutex, so it might block if a longer data receive operation is in progress.

Parameters
- **client** –mqtt client handle
- **topic** –
- **qos** –

Returns message_id of the subscribe message on success -1 on failure

int **esp_mqtt_client_unsubscribe** (*esp_mqtt_client_handle_t* client, const char *topic)

Unsubscribe the client from defined topic.

Notes:

- Client must be connected to send unsubscribe message
- It is thread safe, please refer to `esp_mqtt_client_subscribe` for details

Parameters
- **client** –mqtt client handle
- **topic** –

Returns message_id of the subscribe message on success -1 on failure

int **esp_mqtt_client_publish**(*esp_mqtt_client_handle_t* client, const char *topic, const char *data, int len, int qos, int retain)

Client to send a publish message to the broker.

Notes:

- This API might block for several seconds, either due to network timeout (10s) or if publishing payloads longer than internal buffer (due to message fragmentation)
- Client doesn't have to be connected for this API to work, enqueueing the messages with qos>1 (returning -1 for all the qos=0 messages if disconnected). If MQTT_SKIP_PUBLISH_IF_DISCONNECTED is enabled, this API will not attempt to publish when the client is not connected and will always return -1.
- It is thread safe, please refer to `esp_mqtt_client_subscribe` for details

Parameters
- **client** –mqtt client handle
- **topic** –topic string
- **data** –payload string (set to NULL, sending empty payload message)
- **len** –data length, if set to 0, length is calculated from payload string
- **qos** –qos of publish message
- **retain** –retain flag

Returns message_id of the publish message (for QoS 0 message_id will always be zero) on success. -1 on failure.

int **esp_mqtt_client_enqueue**(*esp_mqtt_client_handle_t* client, const char *topic, const char *data, int len, int qos, int retain, bool store)

Enqueue a message to the outbox, to be sent later. Typically used for messages with qos>0, but could be also used for qos=0 messages if store=true.

This API generates and stores the publish message into the internal outbox and the actual sending to the network is performed in the mqtt-task context (in contrast to the esp_mqtt_client_publish() which sends the publish message immediately in the user task's context). Thus, it could be used as a non blocking version of esp_mqtt_client_publish().

Parameters
- **client** –mqtt client handle
- **topic** –topic string
- **data** –payload string (set to NULL, sending empty payload message)
- **len** –data length, if set to 0, length is calculated from payload string
- **qos** –qos of publish message
- **retain** –retain flag
- **store** –if true, all messages are enqueued; otherwise only qos1 and qos 2 are enqueued

Returns message_id if queued successfully, -1 otherwise

esp_err_t **esp_mqtt_client_destroy**(*esp_mqtt_client_handle_t* client)

Destroys the client handle.

Notes:

- Cannot be called from the mqtt event handler

Parameters **client** –mqtt client handle
Returns ESP_OK ESP_ERR_INVALID_ARG on wrong initialization

esp_err_t **esp_mqtt_set_config**(*esp_mqtt_client_handle_t* client, const *esp_mqtt_client_config_t* *config)

Set configuration structure, typically used when updating the config (i.e. on "before_connect" event.

Parameters
- **client** –mqtt client handle
- **config** –mqtt configuration structure

Returns ESP_ERR_NO_MEM if failed to allocate ESP_ERR_INVALID_ARG if conflicts on transport configuration. ESP_OK on success

esp_err_t **esp_mqtt_client_register_event** (*esp_mqtt_client_handle_t* client, *esp_mqtt_event_id_t* event, *esp_event_handler_t* event_handler, void *event_handler_arg)

Registers mqtt event.

Parameters
- **client** –mqtt client handle
- **event** –event type
- **event_handler** –handler callback
- **event_handler_arg** –handlers context

Returns ESP_ERR_NO_MEM if failed to allocate ESP_ERR_INVALID_ARG on wrong initialization ESP_OK on success

int **esp_mqtt_client_get_outbox_size** (*esp_mqtt_client_handle_t* client)

Get outbox size.

Parameters **client** –mqtt client handle
Returns outbox size 0 on wrong initialization

Structures

struct **esp_mqtt_error_codes**

MQTT error code structure to be passed as a contextual information into ERROR event.

Important: This structure extends `esp_tls_last_error` error structure and is backward compatible with it (so might be down-casted and treated as `esp_tls_last_error` error, but recommended to update applications if used this way previously)

Use this structure directly checking error_type first and then appropriate error code depending on the source of the error:

| error_type | related member variables | note | | MQTT_ERROR_TYPE_TCP_TRANSPORT | esp_tls_last_esp_err, esp_tls_stack_err, esp_tls_cert_verify_flags, sock_errno | Error reported from tcp_transport/esp-tls | | MQTT_ERROR_TYPE_CONNECTION_REFUSED | connect_return_code | Internal error reported from MQTT broker on connection |

Public Members

esp_err_t **esp_tls_last_esp_err**

last esp_err code reported from esp-tls component

int **esp_tls_stack_err**

tls specific error code reported from underlying tls stack

int **esp_tls_cert_verify_flags**

tls flags reported from underlying tls stack during certificate verification

esp_mqtt_error_type_t **error_type**

error type referring to the source of the error

esp_mqtt_connect_return_code_t **connect_return_code**

connection refused error code reported from MQTT broker on connection

int **esp_transport_sock_errno**

errno from the underlying socket

struct **esp_mqtt_event_t**

MQTT event configuration structure

Public Members

esp_mqtt_event_id_t **event_id**

MQTT event type

esp_mqtt_client_handle_t **client**

MQTT client handle for this event

void ***user_context**

User context passed from MQTT client config

char ***data**

Data associated with this event

int **data_len**

Length of the data for this event

int **total_data_len**

Total length of the data (longer data are supplied with multiple events)

int **current_data_offset**

Actual offset for the data associated with this event

char ***topic**

Topic associated with this event

int **topic_len**

Length of the topic for this event associated with this event

int **msg_id**

MQTT messaged id of message

int **session_present**

MQTT session_present flag for connection event

esp_mqtt_error_codes_t ***error_handle**

esp-mqtt error handle including esp-tls errors as well as internal mqtt errors

bool **retain**

Retained flag of the message associated with this event

int **qos**

qos of the messages associated with this event

bool **dup**

dup flag of the message associated with this event

struct **esp_mqtt_client_config_t**

MQTT client configuration structure

Public Members

mqtt_event_callback_t **event_handle**

handle for MQTT events as a callback in legacy mode

esp_event_loop_handle_t **event_loop_handle**

handle for MQTT event loop library

const char ***host**

MQTT server domain (ipv4 as string)

const char ***uri**

Complete MQTT broker URI

uint32_t **port**

MQTT server port

bool **set_null_client_id**

Selects a NULL client id

const char ***client_id**

Set client id. Ignored if set_null_client_id == true If NULL set the default client id. Default client id is `ESP32_CHIPID%` where CHIPID% are last 3 bytes of MAC address in hex format

const char ***username**

MQTT username

const char ***password**

MQTT password

const char ***lwt_topic**

LWT (Last Will and Testament) message topic (NULL by default)

const char ***lwt_msg**

LWT message (NULL by default)

int **lwt_qos**

LWT message qos

int **lwt_retain**

LWT retained message flag

int **lwt_msg_len**

LWT message length

int **disable_clean_session**

mqtt clean session, default clean_session is true

int **keepalive**

mqtt keepalive, default is 120 seconds

bool **disable_auto_reconnect**

this mqtt client will reconnect to server (when errors/disconnect). Set disable_auto_reconnect=true to disable

void ***user_context**

pass user context to this option, then can receive that context in `event->user_context`

int **task_prio**

MQTT task priority, default is 5, can be changed in `make menuconfig`

int **task_stack**

MQTT task stack size, default is 6144 bytes, can be changed in `make menuconfig`

int **buffer_size**

size of MQTT send/receive buffer, default is 1024 (only receive buffer size if `out_buffer_size` defined)

const char ***cert_pem**

Pointer to certificate data in PEM or DER format for server verify (with SSL), default is NULL, not required to verify the server. PEM-format must have a terminating NULL-character. DER-format requires the length to be passed in cert_len.

size_t **cert_len**

Length of the buffer pointed to by cert_pem. May be 0 for null-terminated pem

const char ***client_cert_pem**

Pointer to certificate data in PEM or DER format for SSL mutual authentication, default is NULL, not required if mutual authentication is not needed. If it is not NULL, also `client_key_pem` has to be provided. PEM-format must have a terminating NULL-character. DER-format requires the length to be passed in client_cert_len.

size_t **client_cert_len**

Length of the buffer pointed to by client_cert_pem. May be 0 for null-terminated pem

const char ***client_key_pem**

Pointer to private key data in PEM or DER format for SSL mutual authentication, default is NULL, not required if mutual authentication is not needed. If it is not NULL, also `client_cert_pem` has to be provided. PEM-format must have a terminating NULL-character. DER-format requires the length to be passed in client_key_len

size_t **client_key_len**

Length of the buffer pointed to by client_key_pem. May be 0 for null-terminated pem

esp_mqtt_transport_t **transport**

overrides URI transport

int **refresh_connection_after_ms**

Refresh connection after this value (in milliseconds)

const struct *psk_key_hint* ***psk_hint_key**

Pointer to PSK struct defined in esp_tls.h to enable PSK authentication (as alternative to certificate verification). If not NULL and server/client certificates are NULL, PSK is enabled

bool **use_global_ca_store**

Use a global ca_store for all the connections in which this bool is set.

esp_err_t (***crt_bundle_attach**)(void *conf)

Pointer to ESP x509 Certificate Bundle attach function for the usage of certification bundles in mqtts

int **reconnect_timeout_ms**

Reconnect to the broker after this value in miliseconds if auto reconnect is not disabled (defaults to 10s)

const char ****alpn_protos**

NULL-terminated list of supported application protocols to be used for ALPN

const char ***clientkey_password**

Client key decryption password string

int **clientkey_password_len**

String length of the password pointed to by clientkey_password

esp_mqtt_protocol_ver_t **protocol_ver**

MQTT protocol version used for connection, defaults to value from menuconfig

int **out_buffer_size**

size of MQTT output buffer. If not defined, both output and input buffers have the same size defined as `buffer_size`

bool **skip_cert_common_name_check**

Skip any validation of server certificate CN field, this reduces the security of TLS and makes the mqtt client susceptible to MITM attacks

bool **use_secure_element**

enable secure element for enabling SSL connection

void ***ds_data**

carrier of handle for digital signature parameters

int **network_timeout_ms**

Abort network operation if it is not completed after this value, in milliseconds (defaults to 10s)

bool **disable_keepalive**

Set disable_keepalive=true to turn off keep-alive mechanism, false by default (keepalive is active by default). Note: setting the config value `keepalive` to `0` doesn't disable keepalive feature, but uses a default keepalive period

const char ***path**

Path in the URI

int **message_retransmit_timeout**

timeout for retansmit of failded packet

Macros

MQTT_ERROR_TYPE_ESP_TLS

MQTT_ERROR_TYPE_TCP_TRANSPORT error type hold all sorts of transport layer errors, including ESP-TLS error, but in the past only the errors from MQTT_ERROR_TYPE_ESP_TLS layer were reported, so the ESP-TLS error type is re-defined here for backward compatibility

Type Definitions

typedef struct esp_mqtt_client ***esp_mqtt_client_handle_t**

typedef struct *esp_mqtt_error_codes* **esp_mqtt_error_codes_t**

MQTT error code structure to be passed as a contextual information into ERROR event.

Important: This structure extends `esp_tls_last_error` error structure and is backward compatible with it (so might be down-casted and treated as `esp_tls_last_error` error, but recommended to update applications if used this way previously)

Use this structure directly checking error_type first and then appropriate error code depending on the source of the error:

| error_type | related member variables | note | | MQTT_ERROR_TYPE_TCP_TRANSPORT | esp_tls_last_esp_err, esp_tls_stack_err, esp_tls_cert_verify_flags, sock_errno | Error reported from tcp_transport/esp-tls | | MQTT_ERROR_TYPE_CONNECTION_REFUSED | connect_return_code | Internal error reported from MQTT broker on connection |

typedef *esp_mqtt_event_t* ***esp_mqtt_event_handle_t**

typedef *esp_err_t* (***mqtt_event_callback_t**)(*esp_mqtt_event_handle_t* event)

Enumerations

enum **esp_mqtt_event_id_t**

MQTT event types.

User event handler receives context data in *esp_mqtt_event_t* structure with

- `user_context` - user data from *esp_mqtt_client_config_t*
- `client` - mqtt client handle
- various other data depending on event type

Values:

enumerator **MQTT_EVENT_ANY**

enumerator **MQTT_EVENT_ERROR**

on error event, additional context: connection return code, error handle from *esp_tls* (if supported)

enumerator **MQTT_EVENT_CONNECTED**

connected event, additional context: session_present flag

enumerator **MQTT_EVENT_DISCONNECTED**

disconnected event

enumerator **MQTT_EVENT_SUBSCRIBED**

subscribed event, additional context:

- msg_id message id
- data pointer to the received data
- data_len length of the data for this event

enumerator **MQTT_EVENT_UNSUBSCRIBED**

unsubscribed event

enumerator **MQTT_EVENT_PUBLISHED**

published event, additional context: msg_id

enumerator **MQTT_EVENT_DATA**

data event, additional context:

- msg_id message id
- topic pointer to the received topic
- topic_len length of the topic
- data pointer to the received data
- data_len length of the data for this event
- current_data_offset offset of the current data for this event
- total_data_len total length of the data received
- retain retain flag of the message
- qos qos level of the message
- dup dup flag of the message Note: Multiple MQTT_EVENT_DATA could be fired for one message, if it is longer than internal buffer. In that case only first event contains topic pointer and length, other contain data only with current data length and current data offset updating.

enumerator **MQTT_EVENT_BEFORE_CONNECT**

The event occurs before connecting

enumerator **MQTT_EVENT_DELETED**

Notification on delete of one message from the internal outbox, if the message couldn't have been sent and acknowledged before expiring defined in OUTBOX_EXPIRED_TIMEOUT_MS. (events are not posted upon deletion of successfully acknowledged messages)

- This event id is posted only if MQTT_REPORT_DELETED_MESSAGES==1
- Additional context: msg_id (id of the deleted message).

enum **esp_mqtt_connect_return_code_t**

MQTT connection error codes propagated via ERROR event

Values:

enumerator **MQTT_CONNECTION_ACCEPTED**

Connection accepted

enumerator **MQTT_CONNECTION_REFUSE_PROTOCOL**

MQTT connection refused reason: Wrong protocol

enumerator **MQTT_CONNECTION_REFUSE_ID_REJECTED**

MQTT connection refused reason: ID rejected

enumerator **MQTT_CONNECTION_REFUSE_SERVER_UNAVAILABLE**

MQTT connection refused reason: Server unavailable

enumerator **MQTT_CONNECTION_REFUSE_BAD_USERNAME**

MQTT connection refused reason: Wrong user

enumerator **MQTT_CONNECTION_REFUSE_NOT_AUTHORIZED**

MQTT connection refused reason: Wrong username or password

enum **esp_mqtt_error_type_t**

MQTT connection error codes propagated via ERROR event

Values:

enumerator **MQTT_ERROR_TYPE_NONE**

enumerator **MQTT_ERROR_TYPE_TCP_TRANSPORT**

enumerator **MQTT_ERROR_TYPE_CONNECTION_REFUSED**

enum **esp_mqtt_transport_t**

Values:

enumerator **MQTT_TRANSPORT_UNKNOWN**

enumerator **MQTT_TRANSPORT_OVER_TCP**

MQTT over TCP, using scheme: `mqtt`

enumerator **MQTT_TRANSPORT_OVER_SSL**

MQTT over SSL, using scheme: `mqtts`

enumerator **MQTT_TRANSPORT_OVER_WS**

MQTT over Websocket, using scheme:: `ws`

enumerator **MQTT_TRANSPORT_OVER_WSS**

MQTT over Websocket Secure, using scheme: `wss`

enum **esp_mqtt_protocol_ver_t**

MQTT protocol version used for connection

Values:

enumerator **MQTT_PROTOCOL_UNDEFINED**

enumerator **MQTT_PROTOCOL_V_3_1**

enumerator **MQTT_PROTOCOL_V_3_1_1**

2.4.3 ESP-TLS

Overview

The ESP-TLS component provides a simplified API interface for accessing the commonly used TLS functionality. It supports common scenarios like CA certification validation, SNI, ALPN negotiation, non-blocking connection among others. All the configuration can be specified in the `esp_tls_cfg_t` data structure. Once done, TLS communication can be conducted using the following APIs:

- *`esp_tls_conn_new()`*: for opening a new TLS connection.
- *`esp_tls_conn_read()`*: for reading from the connection.
- *`esp_tls_conn_write()`*: for writing into the connection.
- *`esp_tls_conn_delete()`*: for freeing up the connection.

Any application layer protocol like HTTP1, HTTP2 etc can be executed on top of this layer.

Application Example

Simple HTTPS example that uses ESP-TLS to establish a secure socket connection: protocols/https_request.

Tree structure for ESP-TLS component

```
├── esp_tls.c
├── esp_tls.h
├── esp_tls_mbedtls.c
├── esp_tls_wolfssl.c
└── private_include
    ├── esp_tls_mbedtls.h
    └── esp_tls_wolfssl.h
```

The ESP-TLS component has a file esp-tls/esp_tls.h which contain the public API headers for the component. Internally ESP-TLS component uses one of the two SSL/TLS Libraries between mbedtls and wolfssl for its operation. API specific to mbedtls are present in esp-tls/private_include/esp_tls_mbedtls.h and API specific to wolfssl are present in esp-tls/private_include/esp_tls_wolfssl.h.

TLS Server verification

The ESP-TLS provides multiple options for TLS server verification on the client side. The ESP-TLS client can verify the server by validating the peer's server certificate or with the help of pre-shared keys. The user should select only one of the following options in the *`esp_tls_cfg_t`* structure for TLS server verification. If no option is selected then client will return a fatal error by default at the time of the TLS connection setup.

- **cacert_buf** and **cacert_bytes**: The CA certificate can be provided in a buffer to the `esp_tls_cfg_t` structure. The ESP-TLS will use the CA certificate present in the buffer to verify the server. The following variables in `esp_tls_cfg_t` structure must be set.
  - `cacert_buf` - pointer to the buffer which contains the CA cert.
  - `cacert_bytes` - size of the CA certificate in bytes.
- **use_global_ca_store**: The `global_ca_store` can be initialized and set at once. Then it can be used to verify the server for all the ESP-TLS connections which have set `use_global_ca_store = true` in their respective `esp_tls_cfg_t` structure. See API Reference section below on information regarding different API used for initializing and setting up the `global_ca_store`.
- **crt_bundle_attach**: The ESP x509 Certificate Bundle API provides an easy way to include a bundle of custom x509 root certificates for TLS server verification. More details can be found at *ESP x509 Certificate Bundle*
- **psk_hint_key**: To use pre-shared keys for server verification, *CONFIG_ESP_TLS_PSK_VERIFICATION* should be enabled in the ESP-TLS menuconfig. Then the pointer to PSK hint and key should be provided to the `esp_tls_cfg_t` structure. The ESP-TLS will use the PSK for server verification only when no other option regarding the server verification is selected.
- **skip server verification**: This is an insecure option provided in the ESP-TLS for testing purpose. The option can be set by enabling *CONFIG_ESP_TLS_INSECURE* and *CONFIG_ESP_TLS_SKIP_SERVER_CERT_VERIFY* in the ESP-TLS menuconfig. When this option is enabled the ESP-TLS will skip server verification by default when no other options for server verification are selected in the `esp_tls_cfg_t` structure. *WARNING:Enabling this option comes with a potential risk of establishing a TLS connection with a server which has a fake identity, provided that the server certificate is not provided either through API or other mechanism like ca_store etc.*

Underlying SSL/TLS Library Options

The ESP-TLS component has an option to use mbedtls or wolfssl as their underlying SSL/TLS library. By default only mbedtls is available and is used, wolfssl SSL/TLS library is available publicly at https://github.com/espressif/esp-wolfssl. The repository provides wolfssl component in binary format, it also provides few examples which are useful for understanding the API. Please refer the repository README.md for information on licensing and other options. Please see below option for using wolfssl in your project.

Note: *As the library options are internal to ESP-TLS, switching the libries will not change ESP-TLS specific code for a project.*

How to use wolfssl with ESP-IDF

There are two ways to use wolfssl in your project

1) Directly add wolfssl as a component in your project with following three commands.:

```
(First change directory (cd) to your project directory)
mkdir components
cd components
git clone https://github.com/espressif/esp-wolfssl.git
```

2) Add wolfssl as an extra component in your project.

- Download wolfssl with:

```
git clone https://github.com/espressif/esp-wolfssl.git
```

- Include esp-wolfssl in ESP-IDF with setting EXTRA_COMPONENT_DIRS in CMakeLists.txt/Makefile of your project as done in wolfssl/examples. For reference see Optional Project variables in *build-system.*

After above steps, you will have option to choose wolfssl as underlying SSL/TLS library in configuration menu of your project as follows:

```
idf.py/make menuconfig -> ESP-TLS -> choose SSL/TLS Library -> mbedtls/wolfssl
```

Comparison between mbedtls and wolfssl

The following table shows a typical comparison between wolfssl and mbedtls when protocols/https_request example *(which has server authentication)* was run with both SSL/TLS libraries and with all respective configurations set to default. *(mbedtls IN_CONTENT length and OUT_CONTENT length were set to 16384 bytes and 4096 bytes respectively)*

Property	Wolfssl	Mbedtls
Total Heap Consumed	~19 Kb	~37 Kb
Task Stack Used	~2.2 Kb	~3.6 Kb
Bin size	~858 Kb	~736 Kb

Note: *These values are subject to change with change in configuration options and version of respective libraries.*

ATECC608A (Secure Element) with ESP-TLS

ESP-TLS provides support for using ATECC608A cryptoauth chip with ESP32-WROOM-32SE. Use of ATECC608A is supported only when ESP-TLS is used with mbedTLS as its underlying SSL/TLS stack. ESP-TLS uses mbedtls as its underlying TLS/SSL stack by default unless changed manually.

Note: ATECC608A chip on ESP32-WROOM-32SE must be already configured and provisioned, for details refer esp_cryptoauth_utility

To enable the secure element support, and use it in you project for TLS connection, you will have to follow below steps

1) Add esp-cryptoauthlib in your project, for details please refer esp-cryptoauthlib with ESP_IDF
2) Enable following menuconfig option:

```
menuconfig->Component config->ESP-TLS->Use Secure Element (ATECC608A) with ESP-
↪TLS
```

3) Select type of ATECC608A chip with following option:

```
menuconfig->Component config->esp-cryptoauthlib->Choose Type of ATECC608A chip
```

to know more about different types of ATECC608A chips and how to obtain type of ATECC608A connected to your ESP module please visit ATECC608A chip type

4) Enable use of ATECC608A in ESP-TLS by providing following config option in *esp_tls_cfg_t*

```
esp_tls_cfg_t cfg = {
    /* other configurations options */
    .use_secure_element = true,
};
```

API Reference

Header File

- components/esp-tls/esp_tls.h

Functions

esp_tls_t ***esp_tls_init** (void)

Create TLS connection.

This function allocates and initializes esp-tls structure handle.

Returns tls Pointer to esp-tls as esp-tls handle if successfully initialized, NULL if allocation error

esp_tls_t ***esp_tls_conn_new** (const char *hostname, int hostlen, int port, const *esp_tls_cfg_t* *cfg)

Create a new blocking TLS/SSL connection.

This function establishes a TLS/SSL connection with the specified host in blocking manner.

Note: This API is present for backward compatibility reasons. Alternative function with the same functionality is `esp_tls_conn_new_sync` (and its asynchronous version `esp_tls_conn_new_async`)

Parameters

- **hostname** –**[in]** Hostname of the host.
- **hostlen** –**[in]** Length of hostname.
- **port** –**[in]** Port number of the host.
- **cfg** –**[in]** TLS configuration as esp_tls_cfg_t. If you wish to open non-TLS connection, keep this NULL. For TLS connection, a pass pointer to esp_tls_cfg_t. At a minimum, this structure should be zero-initialized.

Returns pointer to esp_tls_t, or NULL if connection couldn't be opened.

int **esp_tls_conn_new_sync** (const char *hostname, int hostlen, int port, const *esp_tls_cfg_t* *cfg, *esp_tls_t* *tls)

Create a new blocking TLS/SSL connection.

This function establishes a TLS/SSL connection with the specified host in blocking manner.

Parameters

- **hostname** –**[in]** Hostname of the host.
- **hostlen** –**[in]** Length of hostname.
- **port** –**[in]** Port number of the host.
- **cfg** –**[in]** TLS configuration as esp_tls_cfg_t. If you wish to open non-TLS connection, keep this NULL. For TLS connection, a pass pointer to esp_tls_cfg_t. At a minimum, this structure should be zero-initialized.
- **tls** –**[in]** Pointer to esp-tls as esp-tls handle.

Returns

- -1 If connection establishment fails.
- 1 If connection establishment is successful.
- 0 If connection state is in progress.

esp_tls_t ***esp_tls_conn_http_new** (const char *url, const *esp_tls_cfg_t* *cfg)

Create a new blocking TLS/SSL connection with a given "HTTP" url.

The behaviour is same as esp_tls_conn_new() API. However this API accepts host's url.

Parameters

- **url** –**[in]** url of host.
- **cfg** –**[in]** TLS configuration as esp_tls_cfg_t. If you wish to open non-TLS connection, keep this NULL. For TLS connection, a pass pointer to 'esp_tls_cfg_t'. At a minimum, this structure should be zero-initialized.

Returns pointer to esp_tls_t, or NULL if connection couldn't be opened.

int **esp_tls_conn_new_async** (const char *hostname, int hostlen, int port, const *esp_tls_cfg_t* *cfg, *esp_tls_t* *tls)

Create a new non-blocking TLS/SSL connection.

This function initiates a non-blocking TLS/SSL connection with the specified host, but due to its non-blocking nature, it doesn't wait for the connection to get established.

Parameters

- **hostname** –**[in]** Hostname of the host.
- **hostlen** –**[in]** Length of hostname.

- **port** –**[in]** Port number of the host.
- **cfg** –**[in]** TLS configuration as esp_tls_cfg_t. `non_block` member of this structure should be set to be true.
- **tls** –**[in]** pointer to esp-tls as esp-tls handle.

Returns

- -1 If connection establishment fails.
- 0 If connection establishment is in progress.
- 1 If connection establishment is successful.

int **esp_tls_conn_http_new_async**(const char *url, const *esp_tls_cfg_t* *cfg, *esp_tls_t* *tls)

Create a new non-blocking TLS/SSL connection with a given "HTTP" url.

The behaviour is same as esp_tls_conn_new() API. However this API accepts host's url.

Parameters

- **url** –**[in]** url of host.
- **cfg** –**[in]** TLS configuration as esp_tls_cfg_t.
- **tls** –**[in]** pointer to esp-tls as esp-tls handle.

Returns

- -1 If connection establishment fails.
- 0 If connection establishment is in progress.
- 1 If connection establishment is successful.

static inline ssize_t **esp_tls_conn_write**(*esp_tls_t* *tls, const void *data, size_t datalen)

Write from buffer 'data' into specified tls connection.

Parameters

- **tls** –**[in]** pointer to esp-tls as esp-tls handle.
- **data** –**[in]** Buffer from which data will be written.
- **datalen** –**[in]** Length of data buffer.

Returns

- >=0 if write operation was successful, the return value is the number of bytes actually written to the TLS/SSL connection.
- <0 if write operation was not successful, because either an error occured or an action must be taken by the calling process.
- ESP_TLS_ERR_SSL_WANT_READ/ ESP_TLS_ERR_SSL_WANT_WRITE. if the handshake is incomplete and waiting for data to be available for reading. In this case this functions needs to be called again when the underlying transport is ready for operation.

static inline ssize_t **esp_tls_conn_read**(*esp_tls_t* *tls, void *data, size_t datalen)

Read from specified tls connection into the buffer 'data'.

Parameters

- **tls** –**[in]** pointer to esp-tls as esp-tls handle.
- **data** –**[in]** Buffer to hold read data.
- **datalen** –**[in]** Length of data buffer.

Returns

- >0 if read operation was successful, the return value is the number of bytes actually read from the TLS/SSL connection.
- 0 if read operation was not successful. The underlying connection was closed.
- <0 if read operation was not successful, because either an error occured or an action must be taken by the calling process.

void **esp_tls_conn_delete**(*esp_tls_t* *tls)

Compatible version of esp_tls_conn_destroy() to close the TLS/SSL connection.

Note: This API will be removed in IDFv5.0

Parameters **tls** –**[in]** pointer to esp-tls as esp-tls handle.

int **esp_tls_conn_destroy**(*esp_tls_t* *tls)

Close the TLS/SSL connection and free any allocated resources.

This function should be called to close each tls connection opened with esp_tls_conn_new() or esp_tls_conn_http_new() APIs.

Parameters **tls** –**[in]** pointer to esp-tls as esp-tls handle.
Returns - 0 on success
- -1 if socket error or an invalid argument

ssize_t **esp_tls_get_bytes_avail**(*esp_tls_t* *tls)

Return the number of application data bytes remaining to be read from the current record.

This API is a wrapper over mbedtls' s mbedtls_ssl_get_bytes_avail() API.

Parameters **tls** –**[in]** pointer to esp-tls as esp-tls handle.
Returns
- -1 in case of invalid arg
- bytes available in the application data record read buffer

esp_err_t **esp_tls_get_conn_sockfd**(*esp_tls_t* *tls, int *sockfd)

Returns the connection socket file descriptor from *esp_tls* session.

Parameters
- **tls** –**[in]** handle to *esp_tls* context
- **sockfd** –**[out]** int pointer to sockfd value.

Returns - ESP_OK on success and value of sockfd will be updated with socket file descriptor for connection
- ESP_ERR_INVALID_ARG if (tls == NULL || sockfd == NULL)

esp_err_t **esp_tls_init_global_ca_store**(void)

Create a global CA store, initially empty.

This function should be called if the application wants to use the same CA store for multiple connections. This function initialises the global CA store which can be then set by calling esp_tls_set_global_ca_store(). To be effective, this function must be called before any call to esp_tls_set_global_ca_store().

Returns
- ESP_OK if creating global CA store was successful.
- ESP_ERR_NO_MEM if an error occured when allocating the mbedTLS resources.

esp_err_t **esp_tls_set_global_ca_store**(const unsigned char *cacert_pem_buf, const unsigned int cacert_pem_bytes)

Set the global CA store with the buffer provided in pem format.

This function should be called if the application wants to set the global CA store for multiple connections i.e. to add the certificates in the provided buffer to the certificate chain. This function implicitly calls esp_tls_init_global_ca_store() if it has not already been called. The application must call this function before calling esp_tls_conn_new().

Parameters
- **cacert_pem_buf** –**[in]** Buffer which has certificates in pem format. This buffer is used for creating a global CA store, which can be used by other tls connections.
- **cacert_pem_bytes** –**[in]** Length of the buffer.

Returns
- ESP_OK if adding certificates was successful.
- Other if an error occured or an action must be taken by the calling process.

void **esp_tls_free_global_ca_store**(void)

Free the global CA store currently being used.

The memory being used by the global CA store to store all the parsed certificates is freed up. The application can call this API if it no longer needs the global CA store.

esp_err_t **esp_tls_get_and_clear_last_error**(esp_tls_error_handle_t h, int *esp_tls_code, int *esp_tls_flags)

Returns last error in *esp_tls* with detailed mbedtls related error codes. The error information is cleared internally upon return.

Parameters
- **h** –**[in]** esp-tls error handle.
- **esp_tls_code** –**[out]** last error code returned from mbedtls api (set to zero if none) This pointer could be NULL if caller does not care about esp_tls_code
- **esp_tls_flags** –**[out]** last certification verification flags (set to zero if none) This pointer could be NULL if caller does not care about esp_tls_code

Returns
- ESP_ERR_INVALID_STATE if invalid parameters
- ESP_OK (0) if no error occurred
- specific error code (based on ESP_ERR_ESP_TLS_BASE) otherwise

esp_err_t **esp_tls_get_and_clear_error_type**(esp_tls_error_handle_t h, esp_tls_error_type_t err_type, int *error_code)

Returns the last error captured in *esp_tls* of a specific type The error information is cleared internally upon return.

Parameters
- **h** –**[in]** esp-tls error handle.
- **err_type** –**[in]** specific error type
- **error_code** –**[out]** last error code returned from mbedtls api (set to zero if none) This pointer could be NULL if caller does not care about esp_tls_code

Returns
- ESP_ERR_INVALID_STATE if invalid parameters
- ESP_OK if a valid error returned and was cleared

mbedtls_x509_crt ***esp_tls_get_global_ca_store**(void)

Get the pointer to the global CA store currently being used.

The application must first call esp_tls_set_global_ca_store(). Then the same CA store could be used by the application for APIs other than *esp_tls*.

Note: Modifying the pointer might cause a failure in verifying the certificates.

Returns
- Pointer to the global CA store currently being used if successful.
- NULL if there is no global CA store set.

esp_err_t **esp_tls_plain_tcp_connect**(const char *host, int hostlen, int port, const *esp_tls_cfg_t* *cfg, esp_tls_error_handle_t error_handle, int *sockfd)

Creates a plain TCP connection, returning a valid socket fd on success or an error handle.

Parameters
- **host** –**[in]** Hostname of the host.
- **hostlen** –**[in]** Length of hostname.
- **port** –**[in]** Port number of the host.
- **cfg** –**[in]** ESP-TLS configuration as esp_tls_cfg_t.
- **error_handle** –**[out]** ESP-TLS error handle holding potential errors occurred during connection
- **sockfd** –**[out]** Socket descriptor if successfully connected on TCP layer

Returns ESP_OK on success ESP_ERR_INVALID_ARG if invalid output parameters ESP-TLS based error codes on failure

Structures

struct **psk_key_hint**

ESP-TLS preshared key and hint structure.

Public Members

const uint8_t ***key**

key in PSK authentication mode in binary format

const size_t **key_size**

length of the key

const char ***hint**

hint in PSK authentication mode in string format

struct **tls_keep_alive_cfg**

esp-tls client session ticket ctx

Keep alive parameters structure

Public Members

bool **keep_alive_enable**

Enable keep-alive timeout

int **keep_alive_idle**

Keep-alive idle time (second)

int **keep_alive_interval**

Keep-alive interval time (second)

int **keep_alive_count**

Keep-alive packet retry send count

struct **esp_tls_cfg**

ESP-TLS configuration parameters.

Note: Note about format of certificates:

- This structure includes certificates of a Certificate Authority, of client or server as well as private keys, which may be of PEM or DER format. In case of PEM format, the buffer must be NULL terminated (with NULL character included in certificate size).
- Certificate Authority' s certificate may be a chain of certificates in case of PEM format, but could be only one certificate in case of DER format
- Variables names of certificates and private key buffers and sizes are defined as unions providing backward compatibility for legacy *_pem_buf and *_pem_bytes names which suggested only PEM format was supported. It is encouraged to use generic names such as cacert_buf and cacert_bytes.

Public Members

const char **alpn_protos

Application protocols required for HTTP2. If HTTP2/ALPN support is required, a list of protocols that should be negotiated. The format is length followed by protocol name. For the most common cases the following is ok: const char **alpn_protos = { “h2”, NULL };

- where ‘h2’ is the protocol name

const unsigned char *cacert_buf

Certificate Authority’s certificate in a buffer. Format may be PEM or DER, depending on mbedtls-support This buffer should be NULL terminated in case of PEM

const unsigned char *cacert_pem_buf

CA certificate buffer legacy name

unsigned int cacert_bytes

Size of Certificate Authority certificate pointed to by cacert_buf (including NULL-terminator in case of PEM format)

unsigned int cacert_pem_bytes

Size of Certificate Authority certificate legacy name

const unsigned char *clientcert_buf

Client certificate in a buffer Format may be PEM or DER, depending on mbedtls-support This buffer should be NULL terminated in case of PEM

const unsigned char *clientcert_pem_buf

Client certificate legacy name

unsigned int clientcert_bytes

Size of client certificate pointed to by clientcert_pem_buf (including NULL-terminator in case of PEM format)

unsigned int clientcert_pem_bytes

Size of client certificate legacy name

const unsigned char *clientkey_buf

Client key in a buffer Format may be PEM or DER, depending on mbedtls-support This buffer should be NULL terminated in case of PEM

const unsigned char *clientkey_pem_buf

Client key legacy name

unsigned int clientkey_bytes

Size of client key pointed to by clientkey_pem_buf (including NULL-terminator in case of PEM format)

unsigned int clientkey_pem_bytes

Size of client key legacy name

const unsigned char ***clientkey_password**

Client key decryption password string

unsigned int **clientkey_password_len**

String length of the password pointed to by clientkey_password

bool **non_block**

Configure non-blocking mode. If set to true the underneath socket will be configured in non blocking mode after tls session is established

bool **use_secure_element**

Enable this option to use secure element or atecc608a chip (Integrated with ESP32-WROOM-32SE)

int **timeout_ms**

Network timeout in milliseconds

bool **use_global_ca_store**

Use a global ca_store for all the connections in which this bool is set.

const char ***common_name**

If non-NULL, server certificate CN must match this name. If NULL, server certificate CN must match hostname.

bool **skip_common_name**

Skip any validation of server certificate CN field

tls_keep_alive_cfg_t ***keep_alive_cfg**

Enable TCP keep-alive timeout for SSL connection

const *psk_hint_key_t* ***psk_hint_key**

Pointer to PSK hint and key. if not NULL (and certificates are NULL) then PSK authentication is enabled with configured setup. Important note: the pointer must be valid for connection

esp_err_t (***crt_bundle_attach**)(void *conf)

Function pointer to esp_crt_bundle_attach. Enables the use of certification bundle for server verification, must be enabled in menuconfig

void ***ds_data**

Pointer for digital signature peripheral context

bool **is_plain_tcp**

Use non-TLS connection: When set to true, the esp-tls uses plain TCP transport rather then TLS/SSL connection. Note, that it is possible to connect using a plain tcp transport directly with esp_tls_plain_tcp_connect() API

struct ifreq ***if_name**

The name of interface for data to go through. Use the default interface without setting

struct **esp_tls**

ESP-TLS Connection Handle.

Public Members

mbedtls_ssl_context **ssl**

TLS/SSL context

mbedtls_entropy_context **entropy**

mbedTLS entropy context structure

mbedtls_ctr_drbg_context **ctr_drbg**

mbedTLS ctr drbg context structure. CTR_DRBG is deterministic random bit generation based on AES-256

mbedtls_ssl_config **conf**

TLS/SSL configuration to be shared between mbedtls_ssl_context structures

mbedtls_net_context **server_fd**

mbedTLS wrapper type for sockets

mbedtls_x509_crt **cacert**

Container for the X.509 CA certificate

mbedtls_x509_crt ***cacert_ptr**

Pointer to the cacert being used.

mbedtls_x509_crt **clientcert**

Container for the X.509 client certificate

mbedtls_pk_context **clientkey**

Container for the private key of the client certificate

int **sockfd**

Underlying socket file descriptor.

ssize_t (***read**)(struct *esp_tls* *tls, char *data, size_t datalen)

Callback function for reading data from TLS/SSL connection.

ssize_t (***write**)(struct *esp_tls* *tls, const char *data, size_t datalen)

Callback function for writing data to TLS/SSL connection.

esp_tls_conn_state_t **conn_state**

ESP-TLS Connection state

fd_set **rset**

read file descriptors

fd_set **wset**

write file descriptors

bool **is_tls**

indicates connection type (TLS or NON-TLS)

esp_tls_role_t **role**

esp-tls role

- ESP_TLS_CLIENT
- ESP_TLS_SERVER

esp_tls_error_handle_t **error_handle**

handle to error descriptor

Type Definitions

typedef enum *esp_tls_conn_state* **esp_tls_conn_state_t**

ESP-TLS Connection State.

typedef enum *esp_tls_role* **esp_tls_role_t**

typedef struct *psk_key_hint* **psk_hint_key_t**

ESP-TLS preshared key and hint structure.

typedef struct *tls_keep_alive_cfg* **tls_keep_alive_cfg_t**

esp-tls client session ticket ctx

Keep alive parameters structure

typedef struct *esp_tls_cfg* **esp_tls_cfg_t**

ESP-TLS configuration parameters.

Note: Note about format of certificates:

- This structure includes certificates of a Certificate Authority, of client or server as well as private keys, which may be of PEM or DER format. In case of PEM format, the buffer must be NULL terminated (with NULL character included in certificate size).
- Certificate Authority' s certificate may be a chain of certificates in case of PEM format, but could be only one certificate in case of DER format
- Variables names of certificates and private key buffers and sizes are defined as unions providing backward compatibility for legacy *_pem_buf and *_pem_bytes names which suggested only PEM format was supported. It is encouraged to use generic names such as cacert_buf and cacert_bytes.

---

typedef struct *esp_tls* **esp_tls_t**

ESP-TLS Connection Handle.

Enumerations

enum **esp_tls_conn_state**

ESP-TLS Connection State.

Values:

enumerator **ESP_TLS_INIT**

enumerator **ESP_TLS_CONNECTING**

enumerator **ESP_TLS_HANDSHAKE**

enumerator **ESP_TLS_FAIL**

enumerator **ESP_TLS_DONE**

enum **esp_tls_role**

Values:

enumerator **ESP_TLS_CLIENT**

enumerator **ESP_TLS_SERVER**

2.4.4 OpenSSL-APIs

Note: The OpenSSL-API will be discontinued in ESP-IDF from v5.0. Please use ESP-TLS <esp_tls> instead.

The code of this API (located in openssl directory), does not contain OpenSSL itself but is intended as a wrapper for applications using the OpenSSL API. It uses mbedTLS to do the actual work, so anyone compiling openssl code needs the mbedtls library and header file.

OpenSSL APIs not mentioned in this article are not open to public for the time, also do not have the corresponding function. If user calls it directly, it will always return an error or may show cannot link at compiling time.

Chapter Introduction

- Chapter 1. SSL Context Method Create
- Chapter 2. SSL Context Function
- Chapter 3. SSL Function
- Chapter 4. SSL X509 Certification and Private Key Function

Chapter 1. SSL Context Method Create

1.1 const SSL_METHOD* `SSLv3_client_method` (void)

Arguments:

```
none
```

Return:

```
SSLV3.0 version SSL context client method point
```

Description:

```
create the target SSL context method
```

Example:

```
void example(void)
{
    const SSL_METHOD *method = SSLv3_client_method();

    ...
}
```

1.2 const SSL_METHOD* `TLSv1_client_method` (void)

Arguments:

```
none
```

Return:

```
TLSV1.0 version SSL context client method point
```

Description:

```
create the target SSL context method
```

Example:

```
void example(void)
{
    const SSL_METHOD *method = TLSv1_client_method();

    ...
}
```

1.3 const SSL_METHOD* `TLSv1_1_client_method` (void)

Arguments:

```
none
```

Return:

```
TLSV1.1 version SSL context client method point
```

Description:

```
create the target SSL context method
```

Example:

```
void example(void)
{
    const SSL_METHOD *method = TLSv1_1_client_method();

    ...
}
```

1.4 const SSL_METHOD* `TLSv1_2_client_method` (void)

Arguments:

```
none
```

Return:

```
TLSV1.2 version SSL context client method point
```

Description:

```
create the target SSL context method
```

Example:

```
void example(void)
{
    const SSL_METHOD *method = TLSv1_2_client_method();

    ...
}
```

1.5 const SSL_METHOD* `TLS_client_method` (void)

Arguments:

```
none
```

Return:

```
TLSV1.2 version SSL context client method point
```

Description:

```
create the default SSL context method, it's always to be TLSV1.2
```

Example:

```
void example(void)
{
    const SSL_METHOD *method = TLSv1_2_client_method();

    ...
}
```

1.6 const SSL_METHOD* `SSLv3_server_method` (void)

Arguments:

```
none
```

Return:

```
SSLV3.0 version SSL context server method point
```

Description:

```
create the target SSL context method
```

Example:

```
void example(void)
{
    const SSL_METHOD *method = SSLv3_server_method();

    ...
}
```

1.7 const SSL_METHOD* `TLSv1_server_method` (void)

Arguments:

```
none
```

Return:

```
TLSV1.0 version SSL context server method point
```

Description:

```
create the target SSL context method
```

Example:

```
void example(void)
{
    const SSL_METHOD *method = TLSv1_server_method();

    ...
}
```

1.8 const SSL_METHOD* `TLSv1_1_server_method` (void)

Arguments:

```
none
```

Return:

```
TLSV1.1 version SSL context server method point
```

Description:

```
create the target SSL context method
```

Example:

```
void example(void)
{
    const SSL_METHOD *method = TLSv1_1_server_method();

    ...
}
```

1.9 const SSL_METHOD* `TLSv1_2_server_method` (void)

Arguments:

```
none
```

Return:

```
TLSV1.2 version SSL context server method point
```

Description:

```
create the target SSL context method
```

Example:

```
void example(void)
{
    const SSL_METHOD *method = TLSv1_2_server_method();

```

(continues on next page)

(continued from previous page)

```
    ...
}
```

1.10 const SSL_METHOD* `TLS_server_method` (void)

Arguments:

```
none
```

Return:

```
TLSV1.2 version SSL context server method point
```

Description:

```
create the default SSL context method, it's always to be TLSV1.2
```

Example:

```
void example(void)
{
    const SSL_METHOD *method = TLSv1_2_server_method();

    ...
}
```

Chapter 2. SSL Context Function

2.1 SSL_CTX* `SSL_CTX_new` (const SSL_METHOD * method)

Arguments:

```
method - the SSL context method point
```

Return:

```
context point
```

Description:

```
create a SSL context
```

Example:

```
void example(void)
{
    SSL_CTX *ctx = SSL_CTX_new(SSLv3_server_method());

    ...
}
```

2.2 `void SSL_CTX_free` (SSL_CTX * ctx)

Arguments:

```
ctx - the SSL context point
```

Return:

```
none
```

Description:

```
free a SSL context
```

Example:

```
void example(void)
{
    SSL_CTX *ctx;

    ... ...

    SSL_CTX_free(ctx);
}
```

2.3 `int SSL_CTX_set_ssl_version` (SSL_CTX * ctx, const SSL_METHOD * meth)

Arguments:

```
ctx  - SSL context point
meth - SSL method point
```

Return:

```
1 : OK
0 : failed
```

Description:

```
set the SSL context version
```

Example:

```
void example(void)
{
    SSL_CTX *ctx;
    const SSL_METHOD *meth;

    ... ...

    SSL_CTX_set_ssl_version(ctx, meth);
}
```

2.4 const SSL_METHOD* `SSL_CTX_get_ssl_method` (SSL_CTX * ctx)

Arguments:

```
ctx - SSL context point
```

Return:

```
SSL context method
```

Description:

```
get the SSL context method
```

Example:

```
void example(void)
{
    const SSL_METHOD *method;
    SSL_CTX *ctx;
```

(continues on next page)

(continued from previous page)

```
    ... ...

    method = SSL_CTX_get_ssl_method(ctx);
}
```

Chapter 3. SSL Function

3.1 SSL* `SSL_new` (SSL_CTX * ctx)

Arguments:

```
ctx - SSL context point
```

Return:

```
SSL method
```

Description:

```
create a SSL
```

Example:

```
void example(void)
{
    SSL *ssl;
    SSL_CTX *ctx;

    ... ...

    ssl = SSL_new(ctx);
}
```

3.2 void `SSL_free` (SSL * ssl)

Arguments:

```
ssl - SSL point
```

Return:

```
none
```

Description:

```
free SSL
```

Example:

```
void example(void)
{
    SSL *ssl;

    ... ...

    SSL_free(ssl);
}
```

3.3 int `SSL_do_handshake` (SSL * ssl)

Arguments:

```
ssl - SSL point
```

Return:

```
 1 : OK
 0 : failed, connect is close by remote
-1 : a error catch
```

Description:

```
perform the SSL handshake
```

Example:

```
void example(void)
{
    SSL *ssl;
    int ret;

    ... ...

    ret = SSL_do_handshake(ssl);
}
```

3.4 int `SSL_connect` (SSL * ssl)

Arguments:

```
ssl - SSL point
```

Return:

```
 1 : OK
 0 : failed, connect is close by remote
-1 : a error catch
```

Description:

```
connect to the remote SSL server
```

Example:

```
void example(void)
{
    SSL *ssl;
    int ret;

    ... ...

    ret = SSL_connect(ssl);
}
```

3.5 int `SSL_accept` (SSL * ssl)

Arguments:

```
ssl - SSL point
```

Return:

```
 1 : OK
 0 : failed, connect is close by remote
-1 : a error catch
```

Description:

```
accept the remote connection
```

Example:

```
void example(void)
{
    SSL *ssl;
    int ret;

    ... ...

    ret = SSL_accept(ssl);
}
```

3.6 int `SSL_shutdown` (SSL * ssl)

Arguments:

```
ssl - SSL point
```

Return:

```
 1 : OK
 0 : failed, connect is close by remote
-1 : a error catch
```

Description:

```
shutdown the connection
```

Example:

```
void example(void)
{
    SSL *ssl;
    int ret;

    ... ...

    ret = SSL_shutdown(ssl);
}
```

3.7 int `SSL_clear` (SSL * ssl)

Arguments:

```
ssl - SSL point
```

Return:

```
1 : OK
0 : failed
```

Description:

```
shutdown the connection
```

Example:

```
void example(void)
{
    SSL *ssl;
    int ret;

    ... ...

    ret = SSL_clear(ssl);
}
```

3.8 int `SSL_read` (SSL * ssl, void * buffer, int len)

Arguments:

```
ssl    - point
buffer - data buffer point
len    - data length
```

Return:

```
> 0 : OK, and return received data bytes
= 0 : no data received or connection is closed
< 0 : an error catch
```

Description:

```
read data from remote
```

Example:

```
void example(void)
{
    SSL *ssl;
    char *buf;
    int len;
    int ret;

    ... ...

    ret = SSL_read(ssl, buf, len);
}
```

3.9 int `SSL_write` (SSL * ssl, const void * buffer, int len)

Arguments:

```
ssl    - SSL point
buffer - data buffer point
len    - data length
```

Return:

```
> 0 : OK, and return received data bytes
= 0 : no data sent or connection is closed
< 0 : an error catch
```

Description:

```
send the data to remote
```

Example:

```
void example(void)
{
    SSL *ssl;
    char *buf;
    int len;
    int ret;

    ... ...

    ret = SSL_write(ssl, buf, len);
}
```

3.10 `SSL_CTX *SSL_get_SSL_CTX` (const SSL * ssl)

Arguments:

```
ssl - SSL point
```

Return:

```
SSL context
```

Description:

```
get SSL context of the SSL
```

Example:

```
void example(void)
{
    SSL *ssl;
    SSL_CTX *ctx;

    ... ...

    ctx = SSL_get_SSL_CTX(ssl);
}
```

3.11 int `SSL_get_shutdown` (const SSL * ssl)

Arguments:

```
ssl - SSL point
```

Return:

```
shutdown mode
```

Description:

```
get SSL shutdown mode
```

Example:

```
void example(void)
{
    SSL *ssl;
    int mode;

    ... ...

    mode = SSL_get_SSL_CTX(ssl);
}
```

3.12 void `SSL_set_shutdown` (SSL * ssl, int mode)

Arguments:

```
ssl - SSL point
```

Return:

```
shutdown mode
```

Description:

```
set SSL shutdown mode
```

Example:

```
void example(void)
{
    SSL *ssl;
    int mode = 0;

    ... ...

    SSL_set_shutdown(ssl, mode);
}
```

3.13 const SSL_METHOD* `SSL_get_ssl_method` (SSL * ssl)

Arguments:

```
ssl - SSL point
```

Return:

```
SSL method
```

Description:

```
set SSL shutdown mode
```

Example:

```
void example(void)
{
    SSL *ssl;
    const SSL_METHOD *method;

    ... ...

    method = SSL_get_ssl_method(ssl);
}
```

3.14 int `SSL_set_ssl_method` (SSL * ssl, const SSL_METHOD * method)

Arguments:

```
ssl  - SSL point
meth - SSL method point
```

Return:

```
1 : OK
0 : failed
```

Description:

```
set the SSL method
```

Example:

```
void example(void)
{
    int ret;
    SSL *ssl;
    const SSL_METHOD *method;

    ... ...

    ret = SSL_set_ssl_method(ssl, method);
}
```

3.15 int SSL_pending (const SSL * ssl)

Arguments:

```
ssl - SSL point
```

Return:

```
data bytes
```

Description:

```
get received data bytes
```

Example:

```
void example(void)
{
    int ret;
    SSL *ssl;

    ... ...

    ret = SSL_pending(ssl);
}
```

3.16 int SSL_has_pending (const SSL * ssl)

Arguments:

```
ssl - SSL point
```

Return:

```
1 : Yes
0 : No
```

Description:

```
check if data is received
```

Example:

```
void example(void)
{
    int ret;
```

(continues on next page)

(continued from previous page)

```
    SSL *ssl;

    ... ...

    ret = SSL_has_pending(ssl);
}
```

3.17 int `SSL_get_fd` (const SSL * ssl)

Arguments:

```
ssl - SSL point
```

Return:

```
>= 0 : socket id
 < 0 : a error catch
```

Description:

```
get the socket of the SSL
```

Example:

```
void example(void)
{
    int ret;
    SSL *ssl;

    ... ...

    ret = SSL_get_fd(ssl);
}
```

3.18 int `SSL_get_rfd` (const SSL * ssl)

Arguments:

```
ssl - SSL point
```

Return:

```
>= 0 : socket id
 < 0 : a error catch
```

Description:

```
get the read only socket of the SSL
```

Example:

```
void example(void)
{
    int ret;
    SSL *ssl;

    ... ...

    ret = SSL_get_rfd(ssl);
}
```

3.19 int `SSL_get_wfd` (const SSL * ssl)

Arguments:

```
ssl - SSL point
```

Return:

```
>= 0 : socket id
 < 0 : a error catch
```

Description:

```
get the write only socket of the SSL
```

Example:

```
void example(void)
{
    int ret;
    SSL *ssl;

    ... ...

    ret = SSL_get_wfd(ssl);
}
```

3.20 int `SSL_set_fd` (SSL * ssl, int fd)

Arguments:

```
ssl - SSL point
fd  - socket id
```

Return:

```
1 : OK
0 : failed
```

Description:

```
set socket to SSL
```

Example:

```
void example(void)
{
    int ret;
    SSL *ssl;
    int socket;

    ... ...

    ret = SSL_set_fd(ssl, socket);
}
```

3.21 int `SSL_set_rfd` (SSL * ssl, int fd)

Arguments:

```
ssl - SSL point
fd  - socket id
```

Return:

```
1 : OK
0 : failed
```

Description:

```
set read only socket to SSL
```

Example:

```
void example(void)
{
    int ret;
    SSL *ssl;
    int socket;

    ... ...

    ret = SSL_set_rfd(ssl, socket);
}
```

3.22 int `SSL_set_wfd` (SSL * ssl, int fd)

Arguments:

```
ssl - SSL point
fd  - socket id
```

Return:

```
1 : OK
0 : failed
```

Description:

```
set write only socket to SSL
```

Example:

```
void example(void)
{
    int ret;
    SSL *ssl;
    int socket;

    ... ...

    ret = SSL_set_wfd(ssl, socket);
}
```

3.23 int `SSL_version` (const SSL * ssl)

Arguments:

```
ssl - SSL point
```

Return:

```
SSL version
```

Description:

```
get SSL version
```

Example:

```
void example(void)
{
    int version;
    SSL *ssl;

    ... ...

    version = SSL_version(ssl);
}
```

3.24 const char* `SSL_get_version` (const SSL * ssl)

Arguments:

```
ssl - SSL point
```

Return:

```
SSL version string
```

Description:

```
get the SSL current version string
```

Example:

```
void example(void)
{
    char *version;
    SSL *ssl;

    ... ...

    version = SSL_get_version(ssl);
}
```

3.25 OSSL_HANDSHAKE_STATE `SSL_get_state` (const SSL * ssl)

Arguments:

```
ssl - SSL point
```

Return:

```
SSL state
```

Description:

```
get the SSL state
```

Example:

```
void example(void)
{
    OSSL_HANDSHAKE_STATE state;
    SSL *ssl;

    ... ...

    state = SSL_get_state(ssl);
}
```

3.26 const char* `SSL_alert_desc_string` (int value)

Arguments:

```
value - SSL description
```

Return:

```
alert value string
```

Description:

```
get alert description string
```

Example:

```
void example(void)
{
    int val;
    char *str;

    ... ...

    str = SSL_alert_desc_string(val);
}
```

3.27 const char* `SSL_alert_desc_string_long` (int value)

Arguments:

```
value - SSL description
```

Return:

```
alert value long string
```

Description:

```
get alert description long string
```

Example:

```
void example(void)
{
    int val;
    char *str;

    ... ...

    str = SSL_alert_desc_string_long(val);
}
```

3.28 const char* `SSL_alert_type_string` (int value)

Arguments:

```
value - SSL type description
```

Return:

```
alert type string
```

Description:

```
get alert type string
```

Example:

```
void example(void)
{
    int val;
    char *str;

    ... ...

    str = SSL_alert_type_string(val);
}
```

3.29 const char* `SSL_alert_type_string_long` (int value)

Arguments:

```
value - SSL type description
```

Return:

```
alert type long string
```

Description:

```
get alert type long string
```

Example:

```
void example(void)
{
    int val;
    char *str;

    ... ...

    str = SSL_alert_type_string_long(val);
}
```

3.30 const char* `SSL_rstate_string` (SSL * ssl)

Arguments:

```
ssl - SSL point
```

Return:

```
state string
```

Description:

```
get the state string where SSL is reading
```

Example:

```
void example(void)
{
    SSL *ssl;
    char *str;

    ... ...
```

(continues on next page)

(continued from previous page)

```
    str = SSL_rstate_string(ssl);
}
```

3.31 const char* `SSL_rstate_string_long` (SSL * ssl)

Arguments:

```
ssl - SSL point
```

Return:

```
state long string
```

Description:

```
get the state long string where SSL is reading
```

Example:

```
void example(void)
{
    SSL *ssl;
    char *str;

    ... ...

    str = SSL_rstate_string_long(ssl);
}
```

3.32 const char* `SSL_state_string` (const SSL * ssl)

Arguments:

```
ssl - SSL point
```

Return:

```
state string
```

Description:

```
get the state string
```

Example:

```
void example(void)
{
    SSL *ssl;
    const char *str;

    ... ...

    str = SSL_state_string(ssl);
}
```

3.33 char* `SSL_state_string_long` (const SSL * ssl)

Arguments:

```
ssl - SSL point
```

Return:

```
state long string
```

Description:

```
get the state long string
```

Example:

```
void example(void)
{
    SSL *ssl;
    char *str;

    ... ...

    str = SSL_state_string(ssl);
}
```

3.34 int `SSL_get_error` (const SSL * ssl, int ret_code)

Arguments:

```
ssl      - SSL point
ret_code - SSL return code
```

Return:

```
SSL error number
```

Description:

```
get SSL error code
```

Example:

```
void example(void)
{
    SSL *ssl;
    int ret;
    int err;

    ... ...

    err = SSL_get_error(ssl, ret);
}
```

3.35 int `SSL_want` (const SSL * ssl)

Arguments:

```
ssl - SSL point
```

Return:

```
specifical statement
```

Description:

```
get the SSL specifical statement
```

Example:

```
void example(void)
{
    SSL *ssl;
    int state;

    ... ...

    state = SSL_want(ssl);
}
```

3.36 int SSL_want_nothing (const SSL * ssl)

Arguments:

```
ssl - SSL point
```

Return:

```
0 : false
1 : true
```

Description:

```
check if SSL want nothing
```

Example:

```
void example(void)
{
    SSL *ssl;
    int ret;

    ... ...

    ret = SSL_want(ssl);
}
```

3.37 int SSL_want_read (const SSL * ssl)

Arguments:

```
ssl - SSL point
```

Return:

```
0 : false
1 : true
```

Description:

```
check if SSL want to read
```

Example:

```
void example(void)
{
    SSL *ssl;
    int ret;

    ... ...

    ret = SSL_want_read(ssl);
}
```

3.38 int SSL_want_write (const SSL * ssl)

Arguments:

```
ssl - SSL point
```

Return:

```
0 : false
1 : true
```

Description:

```
check if SSL want to write
```

Example:

```
void example(void)
{
    SSL *ssl;
    int ret;

    ... ...

    ret = SSL_want_write(ssl);
}
```

Chapter 4. SSL X509 Certification and Private Key Function

4.1 X509 * d2i_X509 (X509 ** cert, const unsigned char * buffer, long len)

Arguments:

```
cert   - a point pointed to X509 certification
buffer - a point pointed to the certification context memory point
length - certification bytes
```

Return:

```
X509 certification object point
```

Description:

```
load a character certification context into system context. If '*cert' is␣
↪pointed to the
certification, then load certification into it. Or create a new X509␣
↪certification object
```

Example:

```
void example(void)
{
    X509 *new;
    X509 *cert;
    unsigned char *buffer;
    long len;
    ... ...

    new = d2i_X509(&cert, buffer, len);
}
```

4.2 int SSL_add_client_CA (SSL * ssl, X509 * x)

Arguments:

```
ssl - SSL point
x   - CA certification point
```

Return:

```
1 : OK
0 : failed
```

Description:

```
add CA client certification into the SSL
```

Example:

```
void example(void)
{
    int ret;
    SSL *ssl;
    X509 *new;

    ... ...

    ret = SSL_add_client_CA(ssl, new);
}
```

4.3 int SSL_CTX_add_client_CA (SSL_CTX * ctx, X509 * x)

Arguments:

```
ctx - SSL context point
 x   - CA certification point
```

Return:

```
1 : OK
0 : failed
```

Description:

```
add CA client certification into the SSL context
```

Example:

```
void example(void)
{
    int ret;
    SSL_CTX *ctx;
    X509 *new;

    ... ...

    ret = SSL_add_clSSL_CTX_add_client_CAient_CA(ctx, new);
}
```

4.4 X509* SSL_get_certificate (const SSL * ssl)

Arguments:

```
ssl - SSL point
```

Return:

```
SSL certification point
```

Description:

```
get the SSL certification point
```

Example:

```
void example(void)
{
    SSL *ssl;
    X509 *cert;

    ... ...

    cert = SSL_get_certificate(ssl);
}
```

4.5 long `SSL_get_verify_result` (const SSL * ssl)

Arguments:

```
ssl - SSL point
```

Return:

```
the result of verifying
```

Description:

```
get the verifying result of the SSL certification
```

Example:

```
void example(void)
{
    SSL *ssl;
    long ret;

    ... ...

    ret = SSL_get_verify_result(ssl);
}
```

4.6 int `SSL_CTX_use_certificate` (SSL_CTX * ctx, X509 * x)

Arguments:

```
ctx  - the SSL context point
pkey - certification object point
```

Return:

```
1 : OK
0 : failed
```

Description:

```
load the certification into the SSL_CTX or SSL object
```

Example:

```
void example(void)
{
    int ret;
    SSL_CTX *ctx
    X509 *new;

    ... ...

    ret = SSL_CTX_use_certificate(ctx, new);
}
```

4.7 int `SSL_CTX_use_certificate_ASN1` (SSL_CTX * ctx, int len, const unsigned char * d)

Arguments:

```
ctx - SSL context point
len - certification length
d   - data point
```

Return:

```
1 : OK
0 : failed
```

Description:

```
load the ASN1 certification into SSL context
```

Example:

```
void example(void)
{
    int ret;
    SSL_CTX *ctx;
    const unsigned char *buf;
    int len;

    ... ...

    ret = SSL_CTX_use_certificate_ASN1(ctx, len, buf);
}
```

4.8 int `SSL_CTX_use_PrivateKey` (SSL_CTX * ctx, EVP_PKEY * pkey)

Arguments:

```
ctx - SSL context point
pkey - private key object point
```

Return:

```
1 : OK
0 : failed
```

Description:

```
load the private key into the context object
```

Example:

```
void example(void)
{
```

(continues on next page)

(continued from previous page)

```
    int ret;
    SSL_CTX *ctx;
    EVP_PKEY *pkey;

    ... ...

    ret = SSL_CTX_use_PrivateKey(ctx, pkey);
}
```

4.9 int SSL_CTX_use_PrivateKey_ASN1 (int pk, SSL_CTX * ctx, const unsigned char * d, long len)

Arguments:

```
ctx - SSL context point
d   - data point
len - private key length
```

Return:

```
1 : OK
0 : failed
```

Description:

```
load the ASN1 private key into SSL context
```

Example:

```
void example(void)
{
    int ret;
    int pk;
    SSL_CTX *ctx;
    const unsigned char *buf;
    long len;

    ... ...

    ret = SSL_CTX_use_PrivateKey_ASN1(pk, ctx, buf, len);
}
```

4.10 int SSL_CTX_use_RSAPrivateKey_ASN1 (SSL_CTX * ctx, const unsigned char * d, long len)

Arguments:

```
ctx - SSL context point
d   - data point
len - private key length
```

Return:

```
1 : OK
0 : failed
```

Description:

```
load the RSA ASN1 private key into SSL context
```

Example:

```
void example(void)
{
    int ret;
    SSL_CTX *ctx;
    const unsigned char *buf;
    long len;

    ... ...

    ret = SSL_CTX_use_RSAPrivateKey_ASN1(ctx, buf, len);
}
```

4.11 int `SSL_use_certificate_ASN1` (SSL * ssl, int len, const unsigned char * d)

Arguments:

```
ssl - SSL point
len - data bytes
d   - data point
```

Return:

```
1 : OK
0 : failed
```

Description:

```
load certification into the SSL
```

Example:

```
void example(void)
{
    int ret;
    SSL *ssl;
    const unsigned char *buf;
    long len;

    ... ...

    ret = SSL_use_certificate_ASN1(ssl, len, buf);
}
```

4.12 X509* `SSL_get_peer_certificate` (const SSL * ssl)

Arguments:

```
ssl - SSL point
```

Return:

```
peer certification
```

Description:

```
get peer certification
```

Example:

```
void example(void)
{
    SSL *ssl;
```

(continues on next page)

(continued from previous page)

```
    X509 *peer;

    ... ...

    peer = SSL_get_peer_certificate(ssl);
}
```

2.4.5 ESP HTTP Client

Overview

`esp_http_client` provides an API for making HTTP/S requests from ESP-IDF programs. The steps to use this API for an HTTP request are:

- *`esp_http_client_init()`*: To use the HTTP client, the first thing we must do is create an `esp_http_client` by pass into this function with the *`esp_http_client_config_t`* configurations. Which configuration values we do not define, the library will use default.
- *`esp_http_client_perform()`*: The `esp_http_client` argument created from the init function is needed. This function performs all operations of the esp_http_client, from opening the connection, sending data, downloading data and closing the connection if necessary. All related events will be invoked in the event_handle (defined by *`esp_http_client_config_t`*). This function performs its job and blocks the current task until it's done
- *`esp_http_client_cleanup()`*: After completing our **esp_http_client's** task, this is the last function to be called. It will close the connection (if any) and free up all the memory allocated to the HTTP client

Application Example

```
esp_err_t _http_event_handle(esp_http_client_event_t *evt)
{
    switch(evt->event_id) {
        case HTTP_EVENT_ERROR:
            ESP_LOGI(TAG, "HTTP_EVENT_ERROR");
            break;
        case HTTP_EVENT_ON_CONNECTED:
            ESP_LOGI(TAG, "HTTP_EVENT_ON_CONNECTED");
            break;
        case HTTP_EVENT_HEADER_SENT:
            ESP_LOGI(TAG, "HTTP_EVENT_HEADER_SENT");
            break;
        case HTTP_EVENT_ON_HEADER:
            ESP_LOGI(TAG, "HTTP_EVENT_ON_HEADER");
            printf("%.*s", evt->data_len, (char*)evt->data);
            break;
        case HTTP_EVENT_ON_DATA:
            ESP_LOGI(TAG, "HTTP_EVENT_ON_DATA, len=%d", evt->data_len);
            if (!esp_http_client_is_chunked_response(evt->client)) {
                printf("%.*s", evt->data_len, (char*)evt->data);
            }

            break;
        case HTTP_EVENT_ON_FINISH:
            ESP_LOGI(TAG, "HTTP_EVENT_ON_FINISH");
            break;
        case HTTP_EVENT_DISCONNECTED:
            ESP_LOGI(TAG, "HTTP_EVENT_DISCONNECTED");
            break;
    }
```

(continues on next page)

(continued from previous page)

```
    return ESP_OK;
}

esp_http_client_config_t config = {
   .url = "http://httpbin.org/redirect/2",
   .event_handler = _http_event_handle,
};
esp_http_client_handle_t client = esp_http_client_init(&config);
esp_err_t err = esp_http_client_perform(client);

if (err == ESP_OK) {
   ESP_LOGI(TAG, "Status = %d, content_length = %d",
            esp_http_client_get_status_code(client),
            esp_http_client_get_content_length(client));
}
esp_http_client_cleanup(client);
```

Persistent Connections

Persistent connections means that the HTTP client can re-use the same connection for several transfers. If the server does not request to close the connection with the `Connection: close` header, the new transfer with sample ip address, port, and protocol.

To allow the HTTP client to take full advantage of persistent connections, you should do as many of your file transfers as possible using the same handle.

Persistent Connections example

```
esp_err_t err;
esp_http_client_config_t config = {
    .url = "http://httpbin.org/get",
};
esp_http_client_handle_t client = esp_http_client_init(&config);
// first request
err = esp_http_client_perform(client);

// second request
esp_http_client_set_url(client, "http://httpbin.org/anything")
esp_http_client_set_method(client, HTTP_METHOD_DELETE);
esp_http_client_set_header(client, "HeaderKey", "HeaderValue");
err = esp_http_client_perform(client);

esp_http_client_cleanup(client);
```

HTTPS

The HTTP client supports SSL connections using **mbedtls**, with the **url** configuration starting with `https` scheme (or `transport_type = HTTP_TRANSPORT_OVER_SSL`). HTTPS support can be configured via *CONFIG_ESP_HTTP_CLIENT_ENABLE_HTTPS* (enabled by default).

Note: By providing information using HTTPS, the library will use the SSL transport type to connect to the server. If you want to verify server, then need to provide additional certificate in PEM format, and provide to `cert_pem` in `esp_http_client_config_t`

HTTPS example

```
static void https()
{
    esp_http_client_config_t config = {
        .url = "https://www.howsmyssl.com",
        .cert_pem = howsmyssl_com_root_cert_pem_start,
    };
    esp_http_client_handle_t client = esp_http_client_init(&config);
    esp_err_t err = esp_http_client_perform(client);

    if (err == ESP_OK) {
        ESP_LOGI(TAG, "Status = %d, content_length = %d",
                esp_http_client_get_status_code(client),
                esp_http_client_get_content_length(client));
    }
    esp_http_client_cleanup(client);
}
```

HTTP Stream

Some applications need to open the connection and control the reading of the data in an active manner. the HTTP client supports some functions to make this easier, of course, once you use these functions you should not use the *esp_http_client_perform()* function with that handle, and *esp_http_client_init()* alway to called first to get the handle. Perform that functions in the order below:

- *esp_http_client_init()*: to create and handle
- esp_http_client_set_* or esp_http_client_delete_*: to modify the http connection information (optional)
- *esp_http_client_open()*: Open the http connection with write_len parameter, write_len=0 if we only need read
- *esp_http_client_write()*: Upload data, max length equal to write_len of *esp_http_client_open()* function. We may not need to call it if write_len=0
- *esp_http_client_fetch_headers()*: After sending the headers and write data (if any) to the server, this function will read the HTTP Server response headers. Calling this function will return the content-length from the Server, and we can call *esp_http_client_get_status_code()* for the HTTP status of the connection.
- *esp_http_client_read()*: Now, we can read the HTTP stream by this function.
- *esp_http_client_close()*: We should the connection after finish
- *esp_http_client_cleanup()*: And release the resources

Perform HTTP request as Stream reader Check the example function http_perform_as_stream_reader at protocols/esp_http_client.

HTTP Authentication

The HTTP client supports both **Basic** and **Digest** Authentication. By providing usernames and passwords in url or in the username, password of config entry. And with auth_type = HTTP_AUTH_TYPE_BASIC, the HTTP client takes only 1 perform to pass the authentication process. If auth_type = HTTP_AUTH_TYPE_NONE, but there are username and password in the configuration, the HTTP client takes 2 performs. The first time it connects to the server and receives the UNAUTHORIZED header. Based on this information, it will know which authentication method to choose, and perform it on the second.

Config authentication example with URI

```
esp_http_client_config_t config = {
    .url = "http://user:passwd@httpbin.org/basic-auth/user/passwd",
    .auth_type = HTTP_AUTH_TYPE_BASIC,
};
```

Config authentication example with username, password entry

```
esp_http_client_config_t config = {
    .url = "http://httpbin.org/basic-auth/user/passwd",
    .username = "user",
    .password = "passwd",
    .auth_type = HTTP_AUTH_TYPE_BASIC,
};
```

HTTP Client example: protocols/esp_http_client.

API Reference

Header File

- components/esp_http_client/include/esp_http_client.h

Functions

esp_http_client_handle_t **esp_http_client_init** (const *esp_http_client_config_t* *config)

Start a HTTP session This function must be the first function to call, and it returns a esp_http_client_handle_t that you must use as input to other functions in the interface. This call MUST have a corresponding call to esp_http_client_cleanup when the operation is complete.

Parameters **config** –**[in]** The configurations, see `http_client_config_t`

Returns

- `esp_http_client_handle_t`
- NULL if any errors

esp_err_t **esp_http_client_perform** (*esp_http_client_handle_t* client)

Invoke this function after `esp_http_client_init` and all the options calls are made, and will perform the transfer as described in the options. It must be called with the same esp_http_client_handle_t as input as the esp_http_client_init call returned. esp_http_client_perform performs the entire request in either blocking or non-blocking manner. By default, the API performs request in a blocking manner and returns when done, or if it failed, and in non-blocking manner, it returns if EAGAIN/EWOULDBLOCK or EINPROGRESS is encountered, or if it failed. And in case of non-blocking request, the user may call this API multiple times unless request & response is complete or there is a failure. To enable non-blocking esp_http_client_perform(), `is_async` member of *esp_http_client_config_t* must be set while making a call to esp_http_client_init() API. You can do any amount of calls to esp_http_client_perform while using the same esp_http_client_handle_t. The underlying connection may be kept open if the server allows it. If you intend to transfer more than one file, you are even encouraged to do so. esp_http_client will then attempt to re-use the same connection for the following transfers, thus making the operations faster, less CPU intense and using less network resources. Just note that you will have to use `esp_http_client_set_**` between the invokes to set options for the following esp_http_client_perform.

Note: You must never call this function simultaneously from two places using the same client handle. Let the function return first before invoking it another time. If you want parallel transfers, you must use several esp_http_client_handle_t. This function include `esp_http_client_open` -> `esp_http_client_write` -> `esp_http_client_fetch_headers` -> `esp_http_client_read` (and option) `esp_http_client_close`.

Parameters **client** –The esp_http_client handle

Returns

- ESP_OK on successful
- ESP_FAIL on error

esp_err_t **esp_http_client_set_url** (*esp_http_client_handle_t* client, const char *url)

Set URL for client, when performing this behavior, the options in the URL will replace the old ones.

Parameters
- **client** –**[in]** The esp_http_client handle
- **url** –**[in]** The url

Returns
- ESP_OK
- ESP_FAIL

esp_err_t **esp_http_client_set_post_field**(*esp_http_client_handle_t* client, const char *data, int len)

Set post data, this function must be called before `esp_http_client_perform`. Note: The data parameter passed to this function is a pointer and this function will not copy the data.

Parameters
- **client** –**[in]** The esp_http_client handle
- **data** –**[in]** post data pointer
- **len** –**[in]** post length

Returns
- ESP_OK
- ESP_FAIL

int **esp_http_client_get_post_field**(*esp_http_client_handle_t* client, char **data)

Get current post field information.

Parameters
- **client** –**[in]** The client
- **data** –**[out]** Point to post data pointer

Returns Size of post data

esp_err_t **esp_http_client_set_header**(*esp_http_client_handle_t* client, const char *key, const char *value)

Set http request header, this function must be called after esp_http_client_init and before any perform function.

Parameters
- **client** –**[in]** The esp_http_client handle
- **key** –**[in]** The header key
- **value** –**[in]** The header value

Returns
- ESP_OK
- ESP_FAIL

esp_err_t **esp_http_client_get_header**(*esp_http_client_handle_t* client, const char *key, char **value)

Get http request header. The value parameter will be set to NULL if there is no header which is same as the key specified, otherwise the address of header value will be assigned to value parameter. This function must be called after `esp_http_client_init`.

Parameters
- **client** –**[in]** The esp_http_client handle
- **key** –**[in]** The header key
- **value** –**[out]** The header value

Returns
- ESP_OK
- ESP_FAIL

esp_err_t **esp_http_client_get_username**(*esp_http_client_handle_t* client, char **value)

Get http request username. The address of username buffer will be assigned to value parameter. This function must be called after `esp_http_client_init`.

Parameters
- **client** –**[in]** The esp_http_client handle
- **value** –**[out]** The username value

Returns
- ESP_OK
- ESP_ERR_INVALID_ARG

esp_err_t **esp_http_client_set_username**(*esp_http_client_handle_t* client, const char *username)

Set http request username. The value of username parameter will be assigned to username buffer. If the username parameter is NULL then username buffer will be freed.

Parameters
- **client** –**[in]** The esp_http_client handle
- **username** –**[in]** The username value

Returns
- ESP_OK
- ESP_ERR_INVALID_ARG

esp_err_t **esp_http_client_get_password**(*esp_http_client_handle_t* client, char **value)

Get http request password. The address of password buffer will be assigned to value parameter. This function must be called after `esp_http_client_init`.

Parameters
- **client** –**[in]** The esp_http_client handle
- **value** –**[out]** The password value

Returns
- ESP_OK
- ESP_ERR_INVALID_ARG

esp_err_t **esp_http_client_set_password**(*esp_http_client_handle_t* client, const char *password)

Set http request password. The value of password parameter will be assigned to password buffer. If the password parameter is NULL then password buffer will be freed.

Parameters
- **client** –**[in]** The esp_http_client handle
- **password** –**[in]** The password value

Returns
- ESP_OK
- ESP_ERR_INVALID_ARG

esp_err_t **esp_http_client_set_authtype**(*esp_http_client_handle_t* client, *esp_http_client_auth_type_t* auth_type)

Set http request auth_type.

Parameters
- **client** –**[in]** The esp_http_client handle
- **auth_type** –**[in]** The esp_http_client auth type

Returns
- ESP_OK
- ESP_ERR_INVALID_ARG

int **esp_http_client_get_errno**(*esp_http_client_handle_t* client)

Get HTTP client session errno.

Parameters **client** –**[in]** The esp_http_client handle

Returns
- (-1) if invalid argument
- errno

esp_err_t **esp_http_client_set_method**(*esp_http_client_handle_t* client, *esp_http_client_method_t* method)

Set http request method.

Parameters
- **client** –**[in]** The esp_http_client handle
- **method** –**[in]** The method

Returns
- ESP_OK
- ESP_ERR_INVALID_ARG

esp_err_t **esp_http_client_set_timeout_ms** (*esp_http_client_handle_t* client, int timeout_ms)

Set http request timeout.

Parameters
- **client** –**[in]** The esp_http_client handle
- **timeout_ms** –**[in]** The timeout value

Returns
- ESP_OK
- ESP_ERR_INVALID_ARG

esp_err_t **esp_http_client_delete_header** (*esp_http_client_handle_t* client, const char *key)

Delete http request header.

Parameters
- **client** –**[in]** The esp_http_client handle
- **key** –**[in]** The key

Returns
- ESP_OK
- ESP_FAIL

esp_err_t **esp_http_client_open** (*esp_http_client_handle_t* client, int write_len)

This function will be open the connection, write all header strings and return.

Parameters
- **client** –**[in]** The esp_http_client handle
- **write_len** –**[in]** HTTP Content length need to write to the server

Returns
- ESP_OK
- ESP_FAIL

int **esp_http_client_write** (*esp_http_client_handle_t* client, const char *buffer, int len)

This function will write data to the HTTP connection previously opened by esp_http_client_open()

Parameters
- **client** –**[in]** The esp_http_client handle
- **buffer** –The buffer
- **len** –**[in]** This value must not be larger than the write_len parameter provided to esp_http_client_open()

Returns
- (-1) if any errors
- Length of data written

int **esp_http_client_fetch_headers** (*esp_http_client_handle_t* client)

This function need to call after esp_http_client_open, it will read from http stream, process all receive headers.

Parameters **client** –**[in]** The esp_http_client handle

Returns
- (0) if stream doesn’ t contain content-length header, or chunked encoding (checked by `esp_http_client_is_chunked` response)
- (-1: ESP_FAIL) if any errors
- Download data length defined by content-length header

bool **esp_http_client_is_chunked_response** (*esp_http_client_handle_t* client)

Check response data is chunked.

Parameters **client** –**[in]** The esp_http_client handle

Returns true or false

int **esp_http_client_read** (*esp_http_client_handle_t* client, char *buffer, int len)

Read data from http stream.

Parameters
- **client** –**[in]** The esp_http_client handle

- **buffer** –The buffer
- **len** –**[in]** The length

Returns

- (-1) if any errors
- Length of data was read

int **esp_http_client_get_status_code**(*esp_http_client_handle_t* client)

Get http response status code, the valid value if this function invoke after `esp_http_client_perform`

Parameters **client** –**[in]** The esp_http_client handle
Returns Status code

int **esp_http_client_get_content_length**(*esp_http_client_handle_t* client)

Get http response content length (from header Content-Length) the valid value if this function invoke after `esp_http_client_perform`

Parameters **client** –**[in]** The esp_http_client handle
Returns

- (-1) Chunked transfer
- Content-Length value as bytes

esp_err_t **esp_http_client_close**(*esp_http_client_handle_t* client)

Close http connection, still kept all http request resources.

Parameters **client** –**[in]** The esp_http_client handle
Returns

- ESP_OK
- ESP_FAIL

esp_err_t **esp_http_client_cleanup**(*esp_http_client_handle_t* client)

This function must be the last function to call for an session. It is the opposite of the esp_http_client_init function and must be called with the same handle as input that a esp_http_client_init call returned. This might close all connections this handle has used and possibly has kept open until now. Don't call this function if you intend to transfer more files, re-using handles is a key to good performance with esp_http_client.

Parameters **client** –**[in]** The esp_http_client handle
Returns

- ESP_OK
- ESP_FAIL

esp_http_client_transport_t **esp_http_client_get_transport_type**(*esp_http_client_handle_t* client)

Get transport type.

Parameters **client** –**[in]** The esp_http_client handle
Returns

- HTTP_TRANSPORT_UNKNOWN
- HTTP_TRANSPORT_OVER_TCP
- HTTP_TRANSPORT_OVER_SSL

esp_err_t **esp_http_client_set_redirection**(*esp_http_client_handle_t* client)

Set redirection URL. When received the 30x code from the server, the client stores the redirect URL provided by the server. This function will set the current URL to redirect to enable client to execute the redirection request.

Parameters **client** –**[in]** The esp_http_client handle
Returns

- ESP_OK
- ESP_FAIL

void **esp_http_client_add_auth**(*esp_http_client_handle_t* client)

On receiving HTTP Status code 401, this API can be invoked to add authorization information.

Note: There is a possibility of receiving body message with redirection status codes, thus make sure to flush off body data after calling this API.

Parameters **client** –**[in]** The esp_http_client handle

bool **esp_http_client_is_complete_data_received**(*esp_http_client_handle_t* client)

Checks if entire data in the response has been read without any error.

Parameters **client** –**[in]** The esp_http_client handle

Returns

- true
- false

int **esp_http_client_read_response**(*esp_http_client_handle_t* client, char *buffer, int len)

Helper API to read larger data chunks This is a helper API which internally calls `esp_http_client_read` multiple times till the end of data is reached or till the buffer gets full.

Parameters

- **client** –**[in]** The esp_http_client handle
- **buffer** –The buffer
- **len** –**[in]** The buffer length

Returns

- Length of data was read

esp_err_t **esp_http_client_flush_response**(*esp_http_client_handle_t* client, int *len)

Process all remaining response data This uses an internal buffer to repeatedly receive, parse, and discard response data until complete data is processed. As no additional user-supplied buffer is required, this may be preferrable to `esp_http_client_read_response` in situations where the content of the response may be ignored.

Parameters

- **client** –**[in]** The esp_http_client handle
- **len** –Length of data discarded

Returns

- ESP_OK If successful, len will have discarded length
- ESP_FAIL If failed to read response
- ESP_ERR_INVALID_ARG If the client is NULL

esp_err_t **esp_http_client_get_url**(*esp_http_client_handle_t* client, char *url, const int len)

Get URL from client.

Parameters

- **client** –**[in]** The esp_http_client handle
- **url** –**[inout]** The buffer to store URL
- **len** –**[in]** The buffer length

Returns

- ESP_OK
- ESP_FAIL

esp_err_t **esp_http_client_get_chunk_length**(*esp_http_client_handle_t* client, int *len)

Get Chunk-Length from client.

Parameters

- **client** –**[in]** The esp_http_client handle
- **len** –**[out]** Variable to store length

Returns

- ESP_OK If successful, len will have length of current chunk
- ESP_FAIL If the server is not a chunked server
- ESP_ERR_INVALID_ARG If the client or len are NULL

Structures

struct **esp_http_client_event**

HTTP Client events data.

Public Members

esp_http_client_event_id_t **event_id**

event_id, to know the cause of the event

esp_http_client_handle_t **client**

esp_http_client_handle_t context

void ***data**

data of the event

int **data_len**

data length of data

void ***user_data**

user_data context, from *esp_http_client_config_t* user_data

char ***header_key**

For HTTP_EVENT_ON_HEADER event_id, it's store current http header key

char ***header_value**

For HTTP_EVENT_ON_HEADER event_id, it's store current http header value

struct **esp_http_client_config_t**

HTTP configuration.

Public Members

const char ***url**

HTTP URL, the information on the URL is most important, it overrides the other fields below, if any

const char ***host**

Domain or IP as string

int **port**

Port to connect, default depend on esp_http_client_transport_t (80 or 443)

const char ***username**

Using for Http authentication

const char ***password**

Using for Http authentication

esp_http_client_auth_type_t **auth_type**

Http authentication type, see `esp_http_client_auth_type_t`

const char ***path**

HTTP Path, if not set, default is `/`

const char ***query**

HTTP query

const char ***cert_pem**

SSL server certification, PEM format as string, if the client requires to verify server

size_t **cert_len**

Length of the buffer pointed to by cert_pem. May be 0 for null-terminated pem

const char ***client_cert_pem**

SSL client certification, PEM format as string, if the server requires to verify client

size_t **client_cert_len**

Length of the buffer pointed to by client_cert_pem. May be 0 for null-terminated pem

const char ***client_key_pem**

SSL client key, PEM format as string, if the server requires to verify client

size_t **client_key_len**

Length of the buffer pointed to by client_key_pem. May be 0 for null-terminated pem

const char ***client_key_password**

Client key decryption password string

size_t **client_key_password_len**

String length of the password pointed to by client_key_password

const char ***user_agent**

The User Agent string to send with HTTP requests

esp_http_client_method_t **method**

HTTP Method

int **timeout_ms**

Network timeout in milliseconds

bool **disable_auto_redirect**

Disable HTTP automatic redirects

int **max_redirection_count**

Max number of redirections on receiving HTTP redirect status code, using default value if zero

int **max_authorization_retries**

Max connection retries on receiving HTTP unauthorized status code, using default value if zero. Disables authorization retry if -1

http_event_handle_cb **event_handler**

HTTP Event Handle

esp_http_client_transport_t **transport_type**

HTTP transport type, see `esp_http_client_transport_t`

int **buffer_size**

HTTP receive buffer size

int **buffer_size_tx**

HTTP transmit buffer size

void ***user_data**

HTTP user_data context

bool **is_async**

Set asynchronous mode, only supported with HTTPS for now

bool **use_global_ca_store**

Use a global ca_store for all the connections in which this bool is set.

bool **skip_cert_common_name_check**

Skip any validation of server certificate CN field

esp_err_t (***crt_bundle_attach**)(void *conf)

Function pointer to esp_crt_bundle_attach. Enables the use of certification bundle for server verification, must be enabled in menuconfig

bool **keep_alive_enable**

Enable keep-alive timeout

int **keep_alive_idle**

Keep-alive idle time. Default is 5 (second)

int **keep_alive_interval**

Keep-alive interval time. Default is 5 (second)

int **keep_alive_count**

Keep-alive packet retry send count. Default is 3 counts

struct ifreq ***if_name**

The name of interface for data to go through. Use the default interface without setting

Macros

DEFAULT_HTTP_BUF_SIZE

ESP_ERR_HTTP_BASE

Starting number of HTTP error codes

ESP_ERR_HTTP_MAX_REDIRECT

The error exceeds the number of HTTP redirects

ESP_ERR_HTTP_CONNECT

Error open the HTTP connection

ESP_ERR_HTTP_WRITE_DATA

Error write HTTP data

ESP_ERR_HTTP_FETCH_HEADER

Error read HTTP header from server

ESP_ERR_HTTP_INVALID_TRANSPORT

There are no transport support for the input scheme

ESP_ERR_HTTP_CONNECTING

HTTP connection hasn't been established yet

ESP_ERR_HTTP_EAGAIN

Mapping of errno EAGAIN to esp_err_t

ESP_ERR_HTTP_CONNECTION_CLOSED

Read FIN from peer and the connection closed

Type Definitions

typedef struct esp_http_client ***esp_http_client_handle_t**

typedef struct *esp_http_client_event* ***esp_http_client_event_handle_t**

typedef struct *esp_http_client_event* **esp_http_client_event_t**

HTTP Client events data.

typedef *esp_err_t* (***http_event_handle_cb**)(*esp_http_client_event_t* *evt)

Enumerations

enum **esp_http_client_event_id_t**

HTTP Client events id.

Values:

enumerator **HTTP_EVENT_ERROR**

This event occurs when there are any errors during execution

enumerator **HTTP_EVENT_ON_CONNECTED**

Once the HTTP has been connected to the server, no data exchange has been performed

enumerator **HTTP_EVENT_HEADERS_SENT**

After sending all the headers to the server

enumerator **HTTP_EVENT_HEADER_SENT**

This header has been kept for backward compatability and will be deprecated in future versions esp-idf

enumerator **HTTP_EVENT_ON_HEADER**

Occurs when receiving each header sent from the server

enumerator **HTTP_EVENT_ON_DATA**

Occurs when receiving data from the server, possibly multiple portions of the packet

enumerator **HTTP_EVENT_ON_FINISH**

Occurs when finish a HTTP session

enumerator **HTTP_EVENT_DISCONNECTED**

The connection has been disconnected

enum **esp_http_client_transport_t**

HTTP Client transport.

Values:

enumerator **HTTP_TRANSPORT_UNKNOWN**

Unknown

enumerator **HTTP_TRANSPORT_OVER_TCP**

Transport over tcp

enumerator **HTTP_TRANSPORT_OVER_SSL**

Transport over ssl

enum **esp_http_client_method_t**

HTTP method.

Values:

enumerator **HTTP_METHOD_GET**

HTTP GET Method

enumerator **HTTP_METHOD_POST**

HTTP POST Method

enumerator **HTTP_METHOD_PUT**

HTTP PUT Method

enumerator **HTTP_METHOD_PATCH**

HTTP PATCH Method

enumerator **HTTP_METHOD_DELETE**
HTTP DELETE Method

enumerator **HTTP_METHOD_HEAD**
HTTP HEAD Method

enumerator **HTTP_METHOD_NOTIFY**
HTTP NOTIFY Method

enumerator **HTTP_METHOD_SUBSCRIBE**
HTTP SUBSCRIBE Method

enumerator **HTTP_METHOD_UNSUBSCRIBE**
HTTP UNSUBSCRIBE Method

enumerator **HTTP_METHOD_OPTIONS**
HTTP OPTIONS Method

enumerator **HTTP_METHOD_COPY**
HTTP COPY Method

enumerator **HTTP_METHOD_MOVE**
HTTP MOVE Method

enumerator **HTTP_METHOD_LOCK**
HTTP LOCK Method

enumerator **HTTP_METHOD_UNLOCK**
HTTP UNLOCK Method

enumerator **HTTP_METHOD_PROPFIND**
HTTP PROPFIND Method

enumerator **HTTP_METHOD_PROPPATCH**
HTTP PROPPATCH Method

enumerator **HTTP_METHOD_MKCOL**
HTTP MKCOL Method

enumerator **HTTP_METHOD_MAX**

enum **esp_http_client_auth_type_t**
HTTP Authentication type.

Values:

enumerator **HTTP_AUTH_TYPE_NONE**
No authention

enumerator **HTTP_AUTH_TYPE_BASIC**

HTTP Basic authentication

enumerator **HTTP_AUTH_TYPE_DIGEST**

HTTP Disgest authentication

enum **HttpStatus_Code**

Enum for the HTTP status codes.

Values:

enumerator **HttpStatus_Ok**

enumerator **HttpStatus_MultipleChoices**

enumerator **HttpStatus_MovedPermanently**

enumerator **HttpStatus_Found**

enumerator **HttpStatus_SeeOther**

enumerator **HttpStatus_TemporaryRedirect**

enumerator **HttpStatus_PermanentRedirect**

enumerator **HttpStatus_BadRequest**

enumerator **HttpStatus_Unauthorized**

enumerator **HttpStatus_Forbidden**

enumerator **HttpStatus_NotFound**

enumerator **HttpStatus_InternalError**

2.4.6 HTTP Server

Overview

The HTTP Server component provides an ability for running a lightweight web server on ESP32. Following are detailed steps to use the API exposed by HTTP Server:

- *httpd_start()*: Creates an instance of HTTP server, allocate memory/resources for it depending upon the specified configuration and outputs a handle to the server instance. The server has both, a listening socket (TCP) for HTTP traffic, and a control socket (UDP) for control signals, which are selected in a round robin fashion in the server task loop. The task priority and stack size are configurable during server instance creation by passing httpd_config_t structure to httpd_start(). TCP traffic is parsed as HTTP requests and, depending

on the requested URI, user registered handlers are invoked which are supposed to send back HTTP response packets.

- *httpd_stop()*: This stops the server with the provided handle and frees up any associated memory/resources. This is a blocking function that first signals a halt to the server task and then waits for the task to terminate. While stopping, the task will close all open connections, remove registered URI handlers and reset all session context data to empty.
- *httpd_register_uri_handler()*: A URI handler is registered by passing object of type `httpd_uri_t` structure which has members including `uri` name, `method` type (eg. `HTTPD_GET/HTTPD_POST/HTTPD_PUT` etc.), function pointer of type `esp_err_t *handler (httpd_req_t *req)` and `user_ctx` pointer to user context data.

Application Example

```
/* Our URI handler function to be called during GET /uri request */
esp_err_t get_handler(httpd_req_t *req)
{
    /* Send a simple response */
    const char resp[] = "URI GET Response";
    httpd_resp_send(req, resp, HTTPD_RESP_USE_STRLEN);
    return ESP_OK;
}

/* Our URI handler function to be called during POST /uri request */
esp_err_t post_handler(httpd_req_t *req)
{
    /* Destination buffer for content of HTTP POST request.
     * httpd_req_recv() accepts char* only, but content could
     * as well be any binary data (needs type casting).
     * In case of string data, null termination will be absent, and
     * content length would give length of string */
    char content[100];

    /* Truncate if content length larger than the buffer */
    size_t recv_size = MIN(req->content_len, sizeof(content));

    int ret = httpd_req_recv(req, content, recv_size);
    if (ret <= 0) {  /* 0 return value indicates connection closed */
        /* Check if timeout occurred */
        if (ret == HTTPD_SOCK_ERR_TIMEOUT) {
            /* In case of timeout one can choose to retry calling
             * httpd_req_recv(), but to keep it simple, here we
             * respond with an HTTP 408 (Request Timeout) error */
            httpd_resp_send_408(req);
        }
        /* In case of error, returning ESP_FAIL will
         * ensure that the underlying socket is closed */
        return ESP_FAIL;
    }

    /* Send a simple response */
    const char resp[] = "URI POST Response";
    httpd_resp_send(req, resp, HTTPD_RESP_USE_STRLEN);
    return ESP_OK;
}

/* URI handler structure for GET /uri */
httpd_uri_t uri_get = {
    .uri      = "/uri",
    .method   = HTTP_GET,
    .handler  = get_handler,
```

(continues on next page)

(continued from previous page)

```
    .user_ctx = NULL
};

/* URI handler structure for POST /uri */
httpd_uri_t uri_post = {
    .uri      = "/uri",
    .method   = HTTP_POST,
    .handler  = post_handler,
    .user_ctx = NULL
};

/* Function for starting the webserver */
httpd_handle_t start_webserver(void)
{
    /* Generate default configuration */
    httpd_config_t config = HTTPD_DEFAULT_CONFIG();

    /* Empty handle to esp_http_server */
    httpd_handle_t server = NULL;

    /* Start the httpd server */
    if (httpd_start(&server, &config) == ESP_OK) {
        /* Register URI handlers */
        httpd_register_uri_handler(server, &uri_get);
        httpd_register_uri_handler(server, &uri_post);
    }
    /* If server failed to start, handle will be NULL */
    return server;
}

/* Function for stopping the webserver */
void stop_webserver(httpd_handle_t server)
{
    if (server) {
        /* Stop the httpd server */
        httpd_stop(server);
    }
}
```

Simple HTTP server example Check HTTP server example under protocols/http_server/simple where handling of arbitrary content lengths, reading request headers and URL query parameters, and setting response headers is demonstrated.

Persistent Connections

HTTP server features persistent connections, allowing for the re-use of the same connection (session) for several transfers, all the while maintaining context specific data for the session. Context data may be allocated dynamically by the handler in which case a custom function may need to be specified for freeing this data when the connection/session is closed.

Persistent Connections Example

```
/* Custom function to free context */
void free_ctx_func(void *ctx)
{
    /* Could be something other than free */
    free(ctx);
}
```

(continues on next page)

(continued from previous page)

```
esp_err_t adder_post_handler(httpd_req_t *req)
{
    /* Create session's context if not already available */
    if (! req->sess_ctx) {
        req->sess_ctx = malloc(sizeof(ANY_DATA_TYPE));   /*!< Pointer to context␣
↪data */
        req->free_ctx = free_ctx_func;                   /*!< Function to free␣
↪context data */
    }

    /* Access context data */
    ANY_DATA_TYPE *ctx_data = (ANY_DATA_TYPE *)req->sess_ctx;

    /* Respond */
    ................
    ................
    ................

    return ESP_OK;
}
```

Check the example under protocols/http_server/persistent_sockets.

Websocket server

HTTP server provides a simple websocket support if the feature is enabled in menuconfig, please see *CONFIG_HTTPD_WS_SUPPORT*. Please check the example under protocols/http_server/ws_echo_server

API Reference

Header File

- components/esp_http_server/include/esp_http_server.h

Functions

esp_err_t **httpd_register_uri_handler**(*httpd_handle_t* handle, const *httpd_uri_t* *uri_handler)

Registers a URI handler.

Example usage:

```
esp_err_t my_uri_handler(httpd_req_t* req)
{
    // Recv , Process and Send
    ....
    ....
    ....

    // Fail condition
    if (....) {
        // Return fail to close session //
        return ESP_FAIL;
    }

    // On success
    return ESP_OK;
```

(continues on next page)

(continued from previous page)

```
}

// URI handler structure
httpd_uri_t my_uri {
    .uri      = "/my_uri/path/xyz",
    .method   = HTTPD_GET,
    .handler  = my_uri_handler,
    .user_ctx = NULL
};

// Register handler
if (httpd_register_uri_handler(server_handle, &my_uri) != ESP_OK) {
   // If failed to register handler
   ....
}
```

Note: URI handlers can be registered in real time as long as the server handle is valid.

Parameters

- **handle** –**[in]** handle to HTTPD server instance
- **uri_handler** –**[in]** pointer to handler that needs to be registered

Returns

- ESP_OK : On successfully registering the handler
- ESP_ERR_INVALID_ARG : Null arguments
- ESP_ERR_HTTPD_HANDLERS_FULL : If no slots left for new handler
- ESP_ERR_HTTPD_HANDLER_EXISTS : If handler with same URI and method is already registered

esp_err_t **httpd_unregister_uri_handler**(*httpd_handle_t* handle, const char *uri, *httpd_method_t* method)

Unregister a URI handler.

Parameters

- **handle** –**[in]** handle to HTTPD server instance
- **uri** –**[in]** URI string
- **method** –**[in]** HTTP method

Returns

- ESP_OK : On successfully deregistering the handler
- ESP_ERR_INVALID_ARG : Null arguments
- ESP_ERR_NOT_FOUND : Handler with specified URI and method not found

esp_err_t **httpd_unregister_uri**(*httpd_handle_t* handle, const char *uri)

Unregister all URI handlers with the specified uri string.

Parameters

- **handle** –**[in]** handle to HTTPD server instance
- **uri** –**[in]** uri string specifying all handlers that need to be deregisterd

Returns

- ESP_OK : On successfully deregistering all such handlers
- ESP_ERR_INVALID_ARG : Null arguments
- ESP_ERR_NOT_FOUND : No handler registered with specified uri string

esp_err_t **httpd_sess_set_recv_override**(*httpd_handle_t* hd, int sockfd, *httpd_recv_func_t* recv_func)

Override web server's receive function (by session FD)

This function overrides the web server's receive function. This same function is used to read HTTP request packets.

Note: This API is supposed to be called either from the context of

- an http session APIs where sockfd is a valid parameter
- a URI handler where sockfd is obtained using httpd_req_to_sockfd()

Parameters

- **hd** –**[in]** HTTPD instance handle
- **sockfd** –**[in]** Session socket FD
- **recv_func** –**[in]** The receive function to be set for this session

Returns

- ESP_OK : On successfully registering override
- ESP_ERR_INVALID_ARG : Null arguments

esp_err_t **httpd_sess_set_send_override**(*httpd_handle_t* hd, int sockfd, *httpd_send_func_t* send_func)

Override web server's send function (by session FD)

This function overrides the web server's send function. This same function is used to send out any response to any HTTP request.

Note: This API is supposed to be called either from the context of

- an http session APIs where sockfd is a valid parameter
- a URI handler where sockfd is obtained using httpd_req_to_sockfd()

Parameters

- **hd** –**[in]** HTTPD instance handle
- **sockfd** –**[in]** Session socket FD
- **send_func** –**[in]** The send function to be set for this session

Returns

- ESP_OK : On successfully registering override
- ESP_ERR_INVALID_ARG : Null arguments

esp_err_t **httpd_sess_set_pending_override**(*httpd_handle_t* hd, int sockfd, *httpd_pending_func_t* pending_func)

Override web server's pending function (by session FD)

This function overrides the web server's pending function. This function is used to test for pending bytes in a socket.

Note: This API is supposed to be called either from the context of

- an http session APIs where sockfd is a valid parameter
- a URI handler where sockfd is obtained using httpd_req_to_sockfd()

Parameters

- **hd** –**[in]** HTTPD instance handle
- **sockfd** –**[in]** Session socket FD
- **pending_func** –**[in]** The receive function to be set for this session

Returns

- ESP_OK : On successfully registering override
- ESP_ERR_INVALID_ARG : Null arguments

int **httpd_req_to_sockfd** (*httpd_req_t* *r)

Get the Socket Descriptor from the HTTP request.

This API will return the socket descriptor of the session for which URI handler was executed on reception of HTTP request. This is useful when user wants to call functions that require session socket fd, from within a URI handler, ie. : httpd_sess_get_ctx(), httpd_sess_trigger_close(), httpd_sess_update_lru_counter().

Note: This API is supposed to be called only from the context of a URI handler where httpd_req_t* request pointer is valid.

Parameters **r** –**[in]** The request whose socket descriptor should be found

Returns

- Socket descriptor : The socket descriptor for this request
- -1 : Invalid/NULL request pointer

int **httpd_req_recv** (*httpd_req_t* *r, char *buf, size_t buf_len)

API to read content data from the HTTP request.

This API will read HTTP content data from the HTTP request into provided buffer. Use content_len provided in httpd_req_t structure to know the length of data to be fetched. If content_len is too large for the buffer then user may have to make multiple calls to this function, each time fetching 'buf_len' number of bytes, while the pointer to content data is incremented internally by the same number.

Note:

- This API is supposed to be called only from the context of a URI handler where httpd_req_t* request pointer is valid.
- If an error is returned, the URI handler must further return an error. This will ensure that the erroneous socket is closed and cleaned up by the web server.
- Presently Chunked Encoding is not supported

Parameters

- **r** –**[in]** The request being responded to
- **buf** –**[in]** Pointer to a buffer that the data will be read into
- **buf_len** –**[in]** Length of the buffer

Returns

- Bytes : Number of bytes read into the buffer successfully
- 0 : Buffer length parameter is zero / connection closed by peer
- HTTPD_SOCK_ERR_INVALID : Invalid arguments
- HTTPD_SOCK_ERR_TIMEOUT : Timeout/interrupted while calling socket recv()
- HTTPD_SOCK_ERR_FAIL : Unrecoverable error while calling socket recv()

size_t **httpd_req_get_hdr_value_len** (*httpd_req_t* *r, const char *field)

Search for a field in request headers and return the string length of it's value.

Note:

- This API is supposed to be called only from the context of a URI handler where httpd_req_t* request pointer is valid.
- Once httpd_resp_send() API is called all request headers are purged, so request headers need be copied into separate buffers if they are required later.

Parameters

- **r** –**[in]** The request being responded to
- **field** –**[in]** The header field to be searched in the request

Returns

- Length : If field is found in the request URL
- Zero : Field not found / Invalid request / Null arguments

esp_err_t **httpd_req_get_hdr_value_str** (*httpd_req_t* *r, const char *field, char *val, size_t val_size)

Get the value string of a field from the request headers.

Note:

- This API is supposed to be called only from the context of a URI handler where httpd_req_t* request pointer is valid.
- Once httpd_resp_send() API is called all request headers are purged, so request headers need be copied into separate buffers if they are required later.
- If output size is greater than input, then the value is truncated, accompanied by truncation error as return value.
- Use httpd_req_get_hdr_value_len() to know the right buffer length

---

Parameters

- **r** –**[in]** The request being responded to
- **field** –**[in]** The field to be searched in the header
- **val** –**[out]** Pointer to the buffer into which the value will be copied if the field is found
- **val_size** –**[in]** Size of the user buffer "val"

Returns

- ESP_OK : Field found in the request header and value string copied
- ESP_ERR_NOT_FOUND : Key not found
- ESP_ERR_INVALID_ARG : Null arguments
- ESP_ERR_HTTPD_INVALID_REQ : Invalid HTTP request pointer
- ESP_ERR_HTTPD_RESULT_TRUNC : Value string truncated

size_t **httpd_req_get_url_query_len** (*httpd_req_t* *r)

Get Query string length from the request URL.

Note: This API is supposed to be called only from the context of a URI handler where httpd_req_t* request pointer is valid

---

Parameters **r** –**[in]** The request being responded to

Returns

- Length : Query is found in the request URL
- Zero : Query not found / Null arguments / Invalid request

esp_err_t **httpd_req_get_url_query_str** (*httpd_req_t* *r, char *buf, size_t buf_len)

Get Query string from the request URL.

Note:

- Presently, the user can fetch the full URL query string, but decoding will have to be performed by the user. Request headers can be read using httpd_req_get_hdr_value_str() to know the 'Content-Type' (eg. Content-Type: application/x-www-form-urlencoded) and then the appropriate decoding algorithm needs to be applied.
- This API is supposed to be called only from the context of a URI handler where httpd_req_t* request pointer is valid
- If output size is greater than input, then the value is truncated, accompanied by truncation error as return value

- Prior to calling this function, one can use httpd_req_get_url_query_len() to know the query string length beforehand and hence allocate the buffer of right size (usually query string length + 1 for null termination) for storing the query string

---

Parameters

- **r** –**[in]** The request being responded to
- **buf** –**[out]** Pointer to the buffer into which the query string will be copied (if found)
- **buf_len** –**[in]** Length of output buffer

Returns

- ESP_OK : Query is found in the request URL and copied to buffer
- ESP_ERR_NOT_FOUND : Query not found
- ESP_ERR_INVALID_ARG : Null arguments
- ESP_ERR_HTTPD_INVALID_REQ : Invalid HTTP request pointer
- ESP_ERR_HTTPD_RESULT_TRUNC : Query string truncated

esp_err_t **httpd_query_key_value**(const char *qry, const char *key, char *val, size_t val_size)

Helper function to get a URL query tag from a query string of the type param1=val1&param2=val2.

Note:

- The components of URL query string (keys and values) are not URLdecoded. The user must check for 'Content-Type' field in the request headers and then depending upon the specified encoding (URLencoded or otherwise) apply the appropriate decoding algorithm.
- If actual value size is greater than val_size, then the value is truncated, accompanied by truncation error as return value.

Parameters

- **qry** –**[in]** Pointer to query string
- **key** –**[in]** The key to be searched in the query string
- **val** –**[out]** Pointer to the buffer into which the value will be copied if the key is found
- **val_size** –**[in]** Size of the user buffer "val"

Returns

- ESP_OK : Key is found in the URL query string and copied to buffer
- ESP_ERR_NOT_FOUND : Key not found
- ESP_ERR_INVALID_ARG : Null arguments
- ESP_ERR_HTTPD_RESULT_TRUNC : Value string truncated

esp_err_t **httpd_req_get_cookie_val**(*httpd_req_t* *req, const char *cookie_name, char *val, size_t *val_size)

Get the value string of a cookie value from the "Cookie" request headers by cookie name.

Parameters

- **req** –**[in]** Pointer to the HTTP request
- **cookie_name** –**[in]** The cookie name to be searched in the request
- **val** –**[out]** Pointer to the buffer into which the value of cookie will be copied if the cookie is found
- **val_size** –**[inout]** Pointer to size of the user buffer "val". This variable will contain cookie length if ESP_OK is returned and required buffer length incase ESP_ERR_HTTPD_RESULT_TRUNC is returned.

Returns

- ESP_OK : Key is found in the cookie string and copied to buffer
- ESP_ERR_NOT_FOUND : Key not found
- ESP_ERR_INVALID_ARG : Null arguments
- ESP_ERR_HTTPD_RESULT_TRUNC : Value string truncated
- ESP_ERR_NO_MEM : Memory allocation failure

bool **httpd_uri_match_wildcard**(const char *uri_template, const char *uri_to_match, size_t match_upto)

Test if a URI matches the given wildcard template.

Template may end with "?" to make the previous character optional (typically a slash), "*" for a wildcard match, and "?*" to make the previous character optional, and if present, allow anything to follow.

Example:

- * matches everything
- /foo/? matches /foo and /foo/
- /foo/* (sans the backslash) matches /foo/ and /foo/bar, but not /foo or /fo
- /foo/?* or /foo/*? (sans the backslash) matches /foo/, /foo/bar, and also /foo, but not /foox or /fo

The special characters "?" and "*" anywhere else in the template will be taken literally.

Parameters

- **uri_template** –**[in]** URI template (pattern)
- **uri_to_match** –**[in]** URI to be matched
- **match_upto** –**[in]** how many characters of the URI buffer to test (there may be trailing query string etc.)

Returns true if a match was found

esp_err_t **httpd_resp_send**(*httpd_req_t* *r, const char *buf, ssize_t buf_len)

API to send a complete HTTP response.

This API will send the data as an HTTP response to the request. This assumes that you have the entire response ready in a single buffer. If you wish to send response in incremental chunks use httpd_resp_send_chunk() instead.

If no status code and content-type were set, by default this will send 200 OK status code and content type as text/html. You may call the following functions before this API to configure the response headers : httpd_resp_set_status() - for setting the HTTP status string, httpd_resp_set_type() - for setting the Content Type, httpd_resp_set_hdr() - for appending any additional field value entries in the response header

---

Note:

- This API is supposed to be called only from the context of a URI handler where httpd_req_t* request pointer is valid.
- Once this API is called, the request has been responded to.
- No additional data can then be sent for the request.
- Once this API is called, all request headers are purged, so request headers need be copied into separate buffers if they are required later.

Parameters

- **r** –**[in]** The request being responded to
- **buf** –**[in]** Buffer from where the content is to be fetched
- **buf_len** –**[in]** Length of the buffer, HTTPD_RESP_USE_STRLEN to use strlen()

Returns

- ESP_OK : On successfully sending the response packet
- ESP_ERR_INVALID_ARG : Null request pointer
- ESP_ERR_HTTPD_RESP_HDR : Essential headers are too large for internal buffer
- ESP_ERR_HTTPD_RESP_SEND : Error in raw send
- ESP_ERR_HTTPD_INVALID_REQ : Invalid request

esp_err_t **httpd_resp_send_chunk**(*httpd_req_t* *r, const char *buf, ssize_t buf_len)

API to send one HTTP chunk.

This API will send the data as an HTTP response to the request. This API will use chunked-encoding and send the response in the form of chunks. If you have the entire response contained in a single buffer, please use httpd_resp_send() instead.

If no status code and content-type were set, by default this will send 200 OK status code and content type as text/html. You may call the following functions before this API to configure the response headers httpd_resp_set_status() - for setting the HTTP status string, httpd_resp_set_type() - for setting the Content Type, httpd_resp_set_hdr() - for appending any additional field value entries in the response header

---

Note:

- This API is supposed to be called only from the context of a URI handler where httpd_req_t* request pointer is valid.
- When you are finished sending all your chunks, you must call this function with buf_len as 0.
- Once this API is called, all request headers are purged, so request headers need be copied into separate buffers if they are required later.

Parameters

- **`r`** –**[in]** The request being responded to
- **`buf`** –**[in]** Pointer to a buffer that stores the data
- **`buf_len`** –**[in]** Length of the buffer, HTTPD_RESP_USE_STRLEN to use strlen()

Returns

- ESP_OK : On successfully sending the response packet chunk
- ESP_ERR_INVALID_ARG : Null request pointer
- ESP_ERR_HTTPD_RESP_HDR : Essential headers are too large for internal buffer
- ESP_ERR_HTTPD_RESP_SEND : Error in raw send
- ESP_ERR_HTTPD_INVALID_REQ : Invalid request pointer

static inline *esp_err_t* **`httpd_resp_sendstr`**(*httpd_req_t* *r, const char *str)

API to send a complete string as HTTP response.

This API simply calls http_resp_send with buffer length set to string length assuming the buffer contains a null terminated string

Parameters

- **`r`** –**[in]** The request being responded to
- **`str`** –**[in]** String to be sent as response body

Returns

- ESP_OK : On successfully sending the response packet
- ESP_ERR_INVALID_ARG : Null request pointer
- ESP_ERR_HTTPD_RESP_HDR : Essential headers are too large for internal buffer
- ESP_ERR_HTTPD_RESP_SEND : Error in raw send
- ESP_ERR_HTTPD_INVALID_REQ : Invalid request

static inline *esp_err_t* **`httpd_resp_sendstr_chunk`**(*httpd_req_t* *r, const char *str)

API to send a string as an HTTP response chunk.

This API simply calls http_resp_send_chunk with buffer length set to string length assuming the buffer contains a null terminated string

Parameters

- **`r`** –**[in]** The request being responded to
- **`str`** –**[in]** String to be sent as response body (NULL to finish response packet)

Returns

- ESP_OK : On successfully sending the response packet
- ESP_ERR_INVALID_ARG : Null request pointer
- ESP_ERR_HTTPD_RESP_HDR : Essential headers are too large for internal buffer
- ESP_ERR_HTTPD_RESP_SEND : Error in raw send
- ESP_ERR_HTTPD_INVALID_REQ : Invalid request

esp_err_t **`httpd_resp_set_status`**(*httpd_req_t* *r, const char *status)

API to set the HTTP status code.

This API sets the status of the HTTP response to the value specified. By default, the '200 OK' response is sent as the response.

Note:

- This API is supposed to be called only from the context of a URI handler where httpd_req_t* request pointer is valid.
- This API only sets the status to this value. The status isn't sent out until any of the send APIs is executed.
- Make sure that the lifetime of the status string is valid till send function is called.

Parameters

- **`r`** –**[in]** The request being responded to
- **`status`** –**[in]** The HTTP status code of this response

Returns

- ESP_OK : On success
- ESP_ERR_INVALID_ARG : Null arguments
- ESP_ERR_HTTPD_INVALID_REQ : Invalid request pointer

esp_err_t **`httpd_resp_set_type`**(*httpd_req_t* *r, const char *type)

API to set the HTTP content type.

This API sets the 'Content Type' field of the response. The default content type is 'text/html'.

Note:

- This API is supposed to be called only from the context of a URI handler where httpd_req_t* request pointer is valid.
- This API only sets the content type to this value. The type isn't sent out until any of the send APIs is executed.
- Make sure that the lifetime of the type string is valid till send function is called.

Parameters

- **`r`** –**[in]** The request being responded to
- **`type`** –**[in]** The Content Type of the response

Returns

- ESP_OK : On success
- ESP_ERR_INVALID_ARG : Null arguments
- ESP_ERR_HTTPD_INVALID_REQ : Invalid request pointer

esp_err_t **`httpd_resp_set_hdr`**(*httpd_req_t* *r, const char *field, const char *value)

API to append any additional headers.

This API sets any additional header fields that need to be sent in the response.

Note:

- This API is supposed to be called only from the context of a URI handler where httpd_req_t* request pointer is valid.
- The header isn't sent out until any of the send APIs is executed.
- The maximum allowed number of additional headers is limited to value of max_resp_headers in config structure.
- Make sure that the lifetime of the field value strings are valid till send function is called.

Parameters

- **`r`** –**[in]** The request being responded to
- **`field`** –**[in]** The field name of the HTTP header

- **value** –**[in]** The value of this HTTP header

Returns

- ESP_OK : On successfully appending new header
- ESP_ERR_INVALID_ARG : Null arguments
- ESP_ERR_HTTPD_RESP_HDR : Total additional headers exceed max allowed
- ESP_ERR_HTTPD_INVALID_REQ : Invalid request pointer

esp_err_t **httpd_resp_send_err** (*httpd_req_t* *req, *httpd_err_code_t* error, const char *msg)

For sending out error code in response to HTTP request.

Note:

- This API is supposed to be called only from the context of a URI handler where httpd_req_t* request pointer is valid.
- Once this API is called, all request headers are purged, so request headers need be copied into separate buffers if they are required later.
- If you wish to send additional data in the body of the response, please use the lower-level functions directly.

Parameters

- **req** –**[in]** Pointer to the HTTP request for which the response needs to be sent
- **error** –**[in]** Error type to send
- **msg** –**[in]** Error message string (pass NULL for default message)

Returns

- ESP_OK : On successfully sending the response packet
- ESP_ERR_INVALID_ARG : Null arguments
- ESP_ERR_HTTPD_RESP_SEND : Error in raw send
- ESP_ERR_HTTPD_INVALID_REQ : Invalid request pointer

static inline *esp_err_t* **httpd_resp_send_404** (*httpd_req_t* *r)

Helper function for HTTP 404.

Send HTTP 404 message. If you wish to send additional data in the body of the response, please use the lower-level functions directly.

Note:

- This API is supposed to be called only from the context of a URI handler where httpd_req_t* request pointer is valid.
- Once this API is called, all request headers are purged, so request headers need be copied into separate buffers if they are required later.

Parameters **r** –**[in]** The request being responded to

Returns

- ESP_OK : On successfully sending the response packet
- ESP_ERR_INVALID_ARG : Null arguments
- ESP_ERR_HTTPD_RESP_SEND : Error in raw send
- ESP_ERR_HTTPD_INVALID_REQ : Invalid request pointer

static inline *esp_err_t* **httpd_resp_send_408** (*httpd_req_t* *r)

Helper function for HTTP 408.

Send HTTP 408 message. If you wish to send additional data in the body of the response, please use the lower-level functions directly.

Note:

- This API is supposed to be called only from the context of a URI handler where httpd_req_t* request pointer is valid.
- Once this API is called, all request headers are purged, so request headers need be copied into separate buffers if they are required later.

Parameters **r** –**[in]** The request being responded to
Returns
- ESP_OK : On successfully sending the response packet
- ESP_ERR_INVALID_ARG : Null arguments
- ESP_ERR_HTTPD_RESP_SEND : Error in raw send
- ESP_ERR_HTTPD_INVALID_REQ : Invalid request pointer

static inline *esp_err_t* **httpd_resp_send_500** (*httpd_req_t* *r)

Helper function for HTTP 500.

Send HTTP 500 message. If you wish to send additional data in the body of the response, please use the lower-level functions directly.

Note:

- This API is supposed to be called only from the context of a URI handler where httpd_req_t* request pointer is valid.
- Once this API is called, all request headers are purged, so request headers need be copied into separate buffers if they are required later.

Parameters **r** –**[in]** The request being responded to
Returns
- ESP_OK : On successfully sending the response packet
- ESP_ERR_INVALID_ARG : Null arguments
- ESP_ERR_HTTPD_RESP_SEND : Error in raw send
- ESP_ERR_HTTPD_INVALID_REQ : Invalid request pointer

int **httpd_send** (*httpd_req_t* *r, const char *buf, size_t buf_len)

Raw HTTP send.

Call this API if you wish to construct your custom response packet. When using this, all essential header, eg. HTTP version, Status Code, Content Type and Length, Encoding, etc. will have to be constructed manually, and HTTP delimeters (CRLF) will need to be placed correctly for separating sub-sections of the HTTP response packet.

If the send override function is set, this API will end up calling that function eventually to send data out.

Note:

- This API is supposed to be called only from the context of a URI handler where httpd_req_t* request pointer is valid.
- Unless the response has the correct HTTP structure (which the user must now ensure) it is not guaranteed that it will be recognized by the client. For most cases, you wouldn't have to call this API, but you would rather use either of : httpd_resp_send(), httpd_resp_send_chunk()

Parameters
- **r** –**[in]** The request being responded to
- **buf** –**[in]** Buffer from where the fully constructed packet is to be read
- **buf_len** –**[in]** Length of the buffer

Returns
- Bytes : Number of bytes that were sent successfully

- HTTPD_SOCK_ERR_INVALID : Invalid arguments
- HTTPD_SOCK_ERR_TIMEOUT : Timeout/interrupted while calling socket send()
- HTTPD_SOCK_ERR_FAIL : Unrecoverable error while calling socket send()

int **httpd_socket_send**(*httpd_handle_t* hd, int sockfd, const char *buf, size_t buf_len, int flags)

A low level API to send data on a given socket

This internally calls the default send function, or the function registered by httpd_sess_set_send_override().

Note: This API is not recommended to be used in any request handler. Use this only for advanced use cases, wherein some asynchronous data is to be sent over a socket.

Parameters

- **hd** –**[in]** server instance
- **sockfd** –**[in]** session socket file descriptor
- **buf** –**[in]** buffer with bytes to send
- **buf_len** –**[in]** data size
- **flags** –**[in]** flags for the send() function

Returns

- Bytes : The number of bytes sent successfully
- HTTPD_SOCK_ERR_INVALID : Invalid arguments
- HTTPD_SOCK_ERR_TIMEOUT : Timeout/interrupted while calling socket send()
- HTTPD_SOCK_ERR_FAIL : Unrecoverable error while calling socket send()

int **httpd_socket_recv**(*httpd_handle_t* hd, int sockfd, char *buf, size_t buf_len, int flags)

A low level API to receive data from a given socket

This internally calls the default recv function, or the function registered by httpd_sess_set_recv_override().

Note: This API is not recommended to be used in any request handler. Use this only for advanced use cases, wherein some asynchronous communication is required.

Parameters

- **hd** –**[in]** server instance
- **sockfd** –**[in]** session socket file descriptor
- **buf** –**[in]** buffer with bytes to send
- **buf_len** –**[in]** data size
- **flags** –**[in]** flags for the send() function

Returns

- Bytes : The number of bytes received successfully
- 0 : Buffer length parameter is zero / connection closed by peer
- HTTPD_SOCK_ERR_INVALID : Invalid arguments
- HTTPD_SOCK_ERR_TIMEOUT : Timeout/interrupted while calling socket recv()
- HTTPD_SOCK_ERR_FAIL : Unrecoverable error while calling socket recv()

esp_err_t **httpd_register_err_handler**(*httpd_handle_t* handle, *httpd_err_code_t* error, *httpd_err_handler_func_t* handler_fn)

Function for registering HTTP error handlers.

This function maps a handler function to any supported error code given by `httpd_err_code_t`. See prototype `httpd_err_handler_func_t` above for details.

Parameters

- **handle** –**[in]** HTTP server handle
- **error** –**[in]** Error type
- **handler_fn** –**[in]** User implemented handler function (Pass NULL to unset any previously set handler)

Returns

- ESP_OK : handler registered successfully
- ESP_ERR_INVALID_ARG : invalid error code or server handle

esp_err_t **httpd_start**(*httpd_handle_t* *handle, const *httpd_config_t* *config)

Starts the web server.

Create an instance of HTTP server and allocate memory/resources for it depending upon the specified configuration.

Example usage:

```
//Function for starting the webserver
httpd_handle_t start_webserver(void)
{
     // Generate default configuration
     httpd_config_t config = HTTPD_DEFAULT_CONFIG();

     // Empty handle to http_server
     httpd_handle_t server = NULL;

     // Start the httpd server
     if (httpd_start(&server, &config) == ESP_OK) {
         // Register URI handlers
         httpd_register_uri_handler(server, &uri_get);
         httpd_register_uri_handler(server, &uri_post);
     }
     // If server failed to start, handle will be NULL
     return server;
}
```

Parameters

- **config** –**[in]** Configuration for new instance of the server
- **handle** –**[out]** Handle to newly created instance of the server. NULL on error

Returns

- ESP_OK : Instance created successfully
- ESP_ERR_INVALID_ARG : Null argument(s)
- ESP_ERR_HTTPD_ALLOC_MEM : Failed to allocate memory for instance
- ESP_ERR_HTTPD_TASK : Failed to launch server task

esp_err_t **httpd_stop**(*httpd_handle_t* handle)

Stops the web server.

Deallocates memory/resources used by an HTTP server instance and deletes it. Once deleted the handle can no longer be used for accessing the instance.

Example usage:

```
// Function for stopping the webserver
void stop_webserver(httpd_handle_t server)
{
     // Ensure handle is non NULL
     if (server != NULL) {
         // Stop the httpd server
         httpd_stop(server);
     }
}
```

Parameters **handle** –**[in]** Handle to server returned by httpd_start
Returns
- ESP_OK : Server stopped successfully
- ESP_ERR_INVALID_ARG : Handle argument is Null

esp_err_t **httpd_queue_work** (*httpd_handle_t* handle, *httpd_work_fn_t* work, void *arg)

Queue execution of a function in HTTPD's context.

This API queues a work function for asynchronous execution

Note: Some protocols require that the web server generate some asynchronous data and send it to the persistently opened connection. This facility is for use by such protocols.

Parameters
- **handle** –**[in]** Handle to server returned by httpd_start
- **work** –**[in]** Pointer to the function to be executed in the HTTPD's context
- **arg** –**[in]** Pointer to the arguments that should be passed to this function

Returns
- ESP_OK : On successfully queueing the work
- ESP_FAIL : Failure in ctrl socket
- ESP_ERR_INVALID_ARG : Null arguments

void ***httpd_sess_get_ctx** (*httpd_handle_t* handle, int sockfd)

Get session context from socket descriptor.

Typically if a session context is created, it is available to URI handlers through the httpd_req_t structure. But, there are cases where the web server's send/receive functions may require the context (for example, for accessing keying information etc). Since the send/receive function only have the socket descriptor at their disposal, this API provides them with a way to retrieve the session context.

Parameters
- **handle** –**[in]** Handle to server returned by httpd_start
- **sockfd** –**[in]** The socket descriptor for which the context should be extracted.

Returns
- void* : Pointer to the context associated with this session
- NULL : Empty context / Invalid handle / Invalid socket fd

void **httpd_sess_set_ctx** (*httpd_handle_t* handle, int sockfd, void *ctx, *httpd_free_ctx_fn_t* free_fn)

Set session context by socket descriptor.

Parameters
- **handle** –**[in]** Handle to server returned by httpd_start
- **sockfd** –**[in]** The socket descriptor for which the context should be extracted.
- **ctx** –**[in]** Context object to assign to the session
- **free_fn** –**[in]** Function that should be called to free the context

void ***httpd_sess_get_transport_ctx** (*httpd_handle_t* handle, int sockfd)

Get session 'transport' context by socket descriptor.

This context is used by the send/receive functions, for example to manage SSL context.

See also:

httpd_sess_get_ctx()

Parameters
- **handle** –**[in]** Handle to server returned by httpd_start
- **sockfd** –**[in]** The socket descriptor for which the context should be extracted.

Returns

- void* : Pointer to the transport context associated with this session
- NULL : Empty context / Invalid handle / Invalid socket fd

void **httpd_sess_set_transport_ctx**(*httpd_handle_t* handle, int sockfd, void *ctx, *httpd_free_ctx_fn_t* free_fn)

Set session ‘transport’ context by socket descriptor.

See also:

httpd_sess_set_ctx()

Parameters

- **handle** –**[in]** Handle to server returned by httpd_start
- **sockfd** –**[in]** The socket descriptor for which the context should be extracted.
- **ctx** –**[in]** Transport context object to assign to the session
- **free_fn** –**[in]** Function that should be called to free the transport context

void ***httpd_get_global_user_ctx**(*httpd_handle_t* handle)

Get HTTPD global user context (it was set in the server config struct)

Parameters **handle** –**[in]** Handle to server returned by httpd_start
Returns global user context

void ***httpd_get_global_transport_ctx**(*httpd_handle_t* handle)

Get HTTPD global transport context (it was set in the server config struct)

Parameters **handle** –**[in]** Handle to server returned by httpd_start
Returns global transport context

esp_err_t **httpd_sess_trigger_close**(*httpd_handle_t* handle, int sockfd)

Trigger an httpd session close externally.

Note: Calling this API is only required in special circumstances wherein some application requires to close an httpd client session asynchronously.

Parameters

- **handle** –**[in]** Handle to server returned by httpd_start
- **sockfd** –**[in]** The socket descriptor of the session to be closed

Returns

- ESP_OK : On successfully initiating closure
- ESP_FAIL : Failure to queue work
- ESP_ERR_NOT_FOUND : Socket fd not found
- ESP_ERR_INVALID_ARG : Null arguments

esp_err_t **httpd_sess_update_lru_counter**(*httpd_handle_t* handle, int sockfd)

Update LRU counter for a given socket.

LRU Counters are internally associated with each session to monitor how recently a session exchanged traffic. When LRU purge is enabled, if a client is requesting for connection but maximum number of sockets/sessions is reached, then the session having the earliest LRU counter is closed automatically.

Updating the LRU counter manually prevents the socket from being purged due to the Least Recently Used (LRU) logic, even though it might not have received traffic for some time. This is useful when all open sockets/session are frequently exchanging traffic but the user specifically wants one of the sessions to be kept open, irrespective of when it last exchanged a packet.

Note: Calling this API is only necessary if the LRU Purge Enable option is enabled.

Parameters

- **handle** –**[in]** Handle to server returned by httpd_start
- **sockfd** –**[in]** The socket descriptor of the session for which LRU counter is to be updated

Returns

- ESP_OK : Socket found and LRU counter updated
- ESP_ERR_NOT_FOUND : Socket not found
- ESP_ERR_INVALID_ARG : Null arguments

esp_err_t **httpd_get_client_list** (*httpd_handle_t* handle, size_t *fds, int *client_fds)

Returns list of current socket descriptors of active sessions.

Note: Size of provided array has to be equal or greater then maximum number of opened sockets, configured upon initialization with max_open_sockets field in httpd_config_t structure.

Parameters

- **handle** –**[in]** Handle to server returned by httpd_start
- **fds** –**[inout]** In: Size of provided client_fds array Out: Number of valid client fds returned in client_fds,
- **client_fds** –**[out]** Array of client fds

Returns

- ESP_OK : Successfully retrieved session list
- ESP_ERR_INVALID_ARG : Wrong arguments or list is longer than provided array

Structures

struct **httpd_config**

HTTP Server Configuration Structure.

Note: Use HTTPD_DEFAULT_CONFIG() to initialize the configuration to a default value and then modify only those fields that are specifically determined by the use case.

Public Members

unsigned **task_priority**

Priority of FreeRTOS task which runs the server

size_t **stack_size**

The maximum stack size allowed for the server task

BaseType_t **core_id**

The core the HTTP server task will run on

uint16_t **server_port**

TCP Port number for receiving and transmitting HTTP traffic

uint16_t **ctrl_port**

UDP Port number for asynchronously exchanging control signals between various components of the server

uint16_t **max_open_sockets**

Max number of sockets/clients connected at any time

uint16_t **max_uri_handlers**

Maximum allowed uri handlers

uint16_t **max_resp_headers**

Maximum allowed additional headers in HTTP response

uint16_t **backlog_conn**

Number of backlog connections

bool **lru_purge_enable**

Purge "Least Recently Used" connection

uint16_t **recv_wait_timeout**

Timeout for recv function (in seconds)

uint16_t **send_wait_timeout**

Timeout for send function (in seconds)

void ***global_user_ctx**

Global user context.

This field can be used to store arbitrary user data within the server context. The value can be retrieved using the server handle, available e.g. in the httpd_req_t struct.

When shutting down, the server frees up the user context by calling free() on the global_user_ctx field. If you wish to use a custom function for freeing the global user context, please specify that here.

httpd_free_ctx_fn_t **global_user_ctx_free_fn**

Free function for global user context

void ***global_transport_ctx**

Global transport context.

Similar to global_user_ctx, but used for session encoding or encryption (e.g. to hold the SSL context). It will be freed using free(), unless global_transport_ctx_free_fn is specified.

httpd_free_ctx_fn_t **global_transport_ctx_free_fn**

Free function for global transport context

bool **enable_so_linger**

bool to enable/disable linger

int **linger_timeout**

linger timeout (in seconds)

httpd_open_func_t **open_fn**

Custom session opening callback.

Called on a new session socket just after accept(), but before reading any data.

This is an opportunity to set up e.g. SSL encryption using global_transport_ctx and the send/recv/pending session overrides.

If a context needs to be maintained between these functions, store it in the session using httpd_sess_set_transport_ctx() and retrieve it later with httpd_sess_get_transport_ctx()

Returning a value other than ESP_OK will immediately close the new socket.

httpd_close_func_t **close_fn**

Custom session closing callback.

Called when a session is deleted, before freeing user and transport contexts and before closing the socket. This is a place for custom de-init code common to all sockets.

Set the user or transport context to NULL if it was freed here, so the server does not try to free it again.

This function is run for all terminated sessions, including sessions where the socket was closed by the network stack - that is, the file descriptor may not be valid anymore.

httpd_uri_match_func_t **uri_match_fn**

URI matcher function.

Called when searching for a matching URI: 1) whose request handler is to be executed right after an HTTP request is successfully parsed 2) in order to prevent duplication while registering a new URI handler using `httpd_register_uri_handler()`

Available options are: 1) NULL : Internally do basic matching using `strncmp()` 2) `httpd_uri_match_wildcard()` : URI wildcard matcher

Users can implement their own matching functions (See description of the `httpd_uri_match_func_t` function prototype)

struct **httpd_req**

HTTP Request Data Structure.

Public Members

httpd_handle_t **handle**

Handle to server instance

int **method**

The type of HTTP request, -1 if unsupported method

const char **uri**[512 + 1]

The URI of this request (1 byte extra for null termination)

size_t **content_len**

Length of the request body

void ***aux**

Internally used members

void ***user_ctx**

User context pointer passed during URI registration.

void ***sess_ctx**

Session Context Pointer

A session context. Contexts are maintained across 'sessions' for a given open TCP connection. One session could have multiple request responses. The web server will ensure that the context persists across all these request and responses.

By default, this is NULL. URI Handlers can set this to any meaningful value.

If the underlying socket gets closed, and this pointer is non-NULL, the web server will free up the context by calling free(), unless free_ctx function is set.

httpd_free_ctx_fn_t **free_ctx**

Pointer to free context hook

Function to free session context

If the web server's socket closes, it frees up the session context by calling free() on the sess_ctx member. If you wish to use a custom function for freeing the session context, please specify that here.

bool **ignore_sess_ctx_changes**

Flag indicating if Session Context changes should be ignored

By default, if you change the sess_ctx in some URI handler, the http server will internally free the earlier context (if non NULL), after the URI handler returns. If you want to manage the allocation/reallocation/freeing of sess_ctx yourself, set this flag to true, so that the server will not perform any checks on it. The context will be cleared by the server (by calling free_ctx or free()) only if the socket gets closed.

struct **httpd_uri**

Structure for URI handler.

Public Members

const char ***uri**

The URI to handle

httpd_method_t **method**

Method supported by the URI

esp_err_t (***handler**)(*httpd_req_t* *r)

Handler to call for supported request method. This must return ESP_OK, or else the underlying socket will be closed.

void ***user_ctx**

Pointer to user context data which will be available to handler

Macros

HTTPD_MAX_REQ_HDR_LEN

HTTPD_MAX_URI_LEN

HTTPD_SOCK_ERR_FAIL

HTTPD_SOCK_ERR_INVALID

HTTPD_SOCK_ERR_TIMEOUT

HTTPD_200
HTTP Response 200

HTTPD_204
HTTP Response 204

HTTPD_207
HTTP Response 207

HTTPD_400
HTTP Response 400

HTTPD_404
HTTP Response 404

HTTPD_408
HTTP Response 408

HTTPD_500
HTTP Response 500

HTTPD_TYPE_JSON
HTTP Content type JSON

HTTPD_TYPE_TEXT
HTTP Content type text/HTML

HTTPD_TYPE_OCTET
HTTP Content type octext-stream

HTTPD_DEFAULT_CONFIG()

ESP_ERR_HTTPD_BASE
Starting number of HTTPD error codes

ESP_ERR_HTTPD_HANDLERS_FULL
All slots for registering URI handlers have been consumed

ESP_ERR_HTTPD_HANDLER_EXISTS
URI handler with same method and target URI already registered

ESP_ERR_HTTPD_INVALID_REQ
Invalid request pointer

ESP_ERR_HTTPD_RESULT_TRUNC

Result string truncated

ESP_ERR_HTTPD_RESP_HDR

Response header field larger than supported

ESP_ERR_HTTPD_RESP_SEND

Error occured while sending response packet

ESP_ERR_HTTPD_ALLOC_MEM

Failed to dynamically allocate memory for resource

ESP_ERR_HTTPD_TASK

Failed to launch server task/thread

HTTPD_RESP_USE_STRLEN

Type Definitions

typedef struct *httpd_req* **httpd_req_t**

HTTP Request Data Structure.

typedef struct *httpd_uri* **httpd_uri_t**

Structure for URI handler.

typedef int (***httpd_send_func_t**)(*httpd_handle_t* hd, int sockfd, const char *buf, size_t buf_len, int flags)

Prototype for HTTPDs low-level send function.

Note: User specified send function must handle errors internally, depending upon the set value of errno, and return specific HTTPD_SOCK_ERR_ codes, which will eventually be conveyed as return value of httpd_send() function

---

Param hd **[in]** server instance
Param sockfd **[in]** session socket file descriptor
Param buf **[in]** buffer with bytes to send
Param buf_len **[in]** data size
Param flags **[in]** flags for the send() function
Return

- Bytes : The number of bytes sent successfully
- HTTPD_SOCK_ERR_INVALID : Invalid arguments
- HTTPD_SOCK_ERR_TIMEOUT : Timeout/interrupted while calling socket send()
- HTTPD_SOCK_ERR_FAIL : Unrecoverable error while calling socket send()

typedef int (***httpd_recv_func_t**)(*httpd_handle_t* hd, int sockfd, char *buf, size_t buf_len, int flags)

Prototype for HTTPDs low-level recv function.

Note: User specified recv function must handle errors internally, depending upon the set value of errno, and return specific HTTPD_SOCK_ERR_ codes, which will eventually be conveyed as return value of httpd_req_recv() function

---

Param hd [in] server instance
Param sockfd [in] session socket file descriptor
Param buf [in] buffer with bytes to send
Param buf_len [in] data size
Param flags [in] flags for the send() function
Return

- Bytes : The number of bytes received successfully
- 0 : Buffer length parameter is zero / connection closed by peer
- HTTPD_SOCK_ERR_INVALID : Invalid arguments
- HTTPD_SOCK_ERR_TIMEOUT : Timeout/interrupted while calling socket recv()
- HTTPD_SOCK_ERR_FAIL : Unrecoverable error while calling socket recv()

typedef int (***httpd_pending_func_t**)(*httpd_handle_t* hd, int sockfd)

Prototype for HTTPDs low-level "get pending bytes" function.

Note: User specified pending function must handle errors internally, depending upon the set value of errno, and return specific HTTPD_SOCK_ERR_ codes, which will be handled accordingly in the server task.

Param hd [in] server instance
Param sockfd [in] session socket file descriptor
Return

- Bytes : The number of bytes waiting to be received
- HTTPD_SOCK_ERR_INVALID : Invalid arguments
- HTTPD_SOCK_ERR_TIMEOUT : Timeout/interrupted while calling socket pending()
- HTTPD_SOCK_ERR_FAIL : Unrecoverable error while calling socket pending()

typedef *esp_err_t* (***httpd_err_handler_func_t**)(*httpd_req_t* *req, *httpd_err_code_t* error)

Function prototype for HTTP error handling.

This function is executed upon HTTP errors generated during internal processing of an HTTP request. This is used to override the default behavior on error, which is to send HTTP error response and close the underlying socket.

Note:

- If implemented, the server will not automatically send out HTTP error response codes, therefore, httpd_resp_send_err() must be invoked inside this function if user wishes to generate HTTP error responses.
- When invoked, the validity of `uri`, `method`, `content_len` and `user_ctx` fields of the httpd_req_t parameter is not guaranteed as the HTTP request may be partially received/parsed.
- The function must return ESP_OK if underlying socket needs to be kept open. Any other value will ensure that the socket is closed. The return value is ignored when error is of type `HTTPD_500_INTERNAL_SERVER_ERROR` and the socket closed anyway.

Param req [in] HTTP request for which the error needs to be handled
Param error [in] Error type
Return

- ESP_OK : error handled successful
- ESP_FAIL : failure indicates that the underlying socket needs to be closed

typedef void ***httpd_handle_t**

HTTP Server Instance Handle.

Every instance of the server will have a unique handle.

typedef enum http_method **httpd_method_t**

HTTP Method Type wrapper over "enum http_method" available in "http_parser" library.

typedef void (***httpd_free_ctx_fn_t**)(void *ctx)

Prototype for freeing context data (if any)

Param ctx [in] object to free

typedef *esp_err_t* (***httpd_open_func_t**)(*httpd_handle_t* hd, int sockfd)

Function prototype for opening a session.

Called immediately after the socket was opened to set up the send/recv functions and other parameters of the socket.

Param hd [in] server instance
Param sockfd [in] session socket file descriptor
Return
- ESP_OK : On success
- Any value other than ESP_OK will signal the server to close the socket immediately

typedef void (***httpd_close_func_t**)(*httpd_handle_t* hd, int sockfd)

Function prototype for closing a session.

Note: It's possible that the socket descriptor is invalid at this point, the function is called for all terminated sessions. Ensure proper handling of return codes.

Param hd [in] server instance
Param sockfd [in] session socket file descriptor

typedef bool (***httpd_uri_match_func_t**)(const char *reference_uri, const char *uri_to_match, size_t match_upto)

Function prototype for URI matching.

Param reference_uri [in] URI/template with respect to which the other URI is matched
Param uri_to_match [in] URI/template being matched to the reference URI/template
Param match_upto [in] For specifying the actual length of `uri_to_match` up to which the matching algorithm is to be applied (The maximum value is `strlen(uri_to_match)`, independent of the length of `reference_uri`)
Return true on match

typedef struct *httpd_config* **httpd_config_t**

HTTP Server Configuration Structure.

Note: Use HTTPD_DEFAULT_CONFIG() to initialize the configuration to a default value and then modify only those fields that are specifically determined by the use case.

---

typedef void (***httpd_work_fn_t**)(void *arg)

Prototype of the HTTPD work function Please refer to httpd_queue_work() for more details.

Param arg [in] The arguments for this work function

Enumerations

enum **httpd_err_code_t**

Error codes sent as HTTP response in case of errors encountered during processing of an HTTP request.

Values:

enumerator **HTTPD_500_INTERNAL_SERVER_ERROR**

enumerator **HTTPD_501_METHOD_NOT_IMPLEMENTED**

enumerator **HTTPD_505_VERSION_NOT_SUPPORTED**

enumerator **HTTPD_400_BAD_REQUEST**

enumerator **HTTPD_401_UNAUTHORIZED**

enumerator **HTTPD_403_FORBIDDEN**

enumerator **HTTPD_404_NOT_FOUND**

enumerator **HTTPD_405_METHOD_NOT_ALLOWED**

enumerator **HTTPD_408_REQ_TIMEOUT**

enumerator **HTTPD_411_LENGTH_REQUIRED**

enumerator **HTTPD_414_URI_TOO_LONG**

enumerator **HTTPD_431_REQ_HDR_FIELDS_TOO_LARGE**

enumerator **HTTPD_ERR_CODE_MAX**

2.4.7 HTTPS server

Overview

This component is built on top of *esp_http_server*. The HTTPS server takes advantage of hooks and function overrides in the regular HTTP server to provide encryption using OpenSSL.

All documentation for *esp_http_server* applies also to a server you create this way.

Used APIs

The following API of *esp_http_server* should not be used with *esp_https_server*, as they are used internally to handle secure sessions and to maintain internal state:

- "send", "receive" and "pending" function overrides - secure socket handling
  - *httpd_sess_set_send_override()*
  - *httpd_sess_set_recv_override()*
  - *httpd_sess_set_pending_override()*

- "transport context" - both global and session
  - *httpd_sess_get_transport_ctx()* - returns SSL used for the session
  - *httpd_sess_set_transport_ctx()*
  - *httpd_get_global_transport_ctx()* - returns the shared SSL context
  - `httpd_config_t.global_transport_ctx`
  - `httpd_config_t.global_transport_ctx_free_fn`
  - `httpd_config_t.open_fn` - used to set up secure sockets

Everything else can be used without limitations.

Usage

Please see the example protocols/https_server to learn how to set up a secure server.

Basically all you need is to generate a certificate, embed it in the firmware, and provide its pointers and lengths to the start function via the init struct.

The server can be started with or without SSL by changing a flag in the init struct - `httpd_ssl_config.transport_mode`. This could be used e.g. for testing or in trusted environments where you prefer speed over security.

Performance

The initial session setup can take about two seconds, or more with slower clock speeds or more verbose logging. Subsequent requests through the open secure socket are much faster (down to under 100 ms).

API Reference

Header File

- components/esp_https_server/include/esp_https_server.h

Functions

esp_err_t **httpd_ssl_start** (*httpd_handle_t* *handle, *httpd_ssl_config_t* *config)

Create a SSL capable HTTP server (secure mode may be disabled in config)

Parameters

- **config** –**[inout]** - server config, must not be const. Does not have to stay valid after calling this function.
- **handle** –**[out]** - storage for the server handle, must be a valid pointer

Returns success

void **httpd_ssl_stop** (*httpd_handle_t* handle)

Stop the server. Blocks until the server is shut down.

Parameters **handle** –**[in]**

Structures

struct **esp_https_server_user_cb_arg**

Callback data struct, contains the ESP-TLS connection handle.

Public Members

const *esp_tls_t* ***tls**

ESP-TLS connection handle

struct **httpd_ssl_config**

HTTPS server config struct

Please use HTTPD_SSL_CONFIG_DEFAULT() to initialize it.

Public Members

httpd_config_t **httpd**

Underlying HTTPD server config

Parameters like task stack size and priority can be adjusted here.

const uint8_t ***cacert_pem**

CA certificate (here it is treated as server cert) Todo: Fix this change in release/v5.0 as it would be a breaking change i.e. Rename the nomenclature of variables holding different certs in https_server component as well as example 1)The cacert variable should hold the CA which is used to authenticate clients (should inherit current role of client_verify_cert_pem var) 2)There should be another variable servercert which whould hold servers own certificate (should inherit current role of cacert var)

size_t **cacert_len**

CA certificate byte length

const uint8_t ***client_verify_cert_pem**

Client verify authority certificate (CA used to sign clients, or client cert itself

size_t **client_verify_cert_len**

Client verify authority cert len

const uint8_t ***prvtkey_pem**

Private key

size_t **prvtkey_len**

Private key byte length

httpd_ssl_transport_mode_t **transport_mode**

Transport Mode (default secure)

uint16_t **port_secure**

Port used when transport mode is secure (default 443)

uint16_t **port_insecure**

Port used when transport mode is insecure (default 80)

bool **session_tickets**

Enable tls session tickets

esp_https_server_user_cb ***user_cb**

User callback for esp_https_server

Macros

HTTPD_SSL_CONFIG_DEFAULT()

Default config struct init

(http_server default config had to be copied for customization)

Notes:

- port is set when starting the server, according to ‘transport_mode’
- one socket uses ~ 40kB RAM with SSL, we reduce the default socket count to 4
- SSL sockets are usually long-lived, closing LRU prevents pool exhaustion DOS
- Stack size may need adjustments depending on the user application

Type Definitions

typedef struct *esp_https_server_user_cb_arg* **esp_https_server_user_cb_arg_t**

Callback data struct, contains the ESP-TLS connection handle.

typedef void **esp_https_server_user_cb**(*esp_https_server_user_cb_arg_t* *user_cb)

Callback function prototype Can be used to get connection or client information (SSL context) E.g. Client certificate, Socket FD, Connection state, etc.

Param user_cb Callback data struct

typedef struct *httpd_ssl_config* **httpd_ssl_config_t**

Enumerations

enum **httpd_ssl_transport_mode_t**

Values:

enumerator **HTTPD_SSL_TRANSPORT_SECURE**

enumerator **HTTPD_SSL_TRANSPORT_INSECURE**

2.4.8 ICMP Echo

Overview

ICMP (Internet Control Message Protocol) is used for diagnostic or control purposes or generated in response to errors in IP operations. The common network util `ping` is implemented based on the ICMP packets with the type field value of 0, also called `Echo Reply`.

During a ping session, the source host firstly sends out an ICMP echo request packet and wait for an ICMP echo reply with specific times. In this way, it also measures the round-trip time for the messages. After receiving a valid ICMP echo reply, the source host will generate statistics about the IP link layer (e.g. packet loss, elapsed time, etc).

It is common that IoT device needs to check whether a remote server is alive or not. The device should show the warnings to users when it got offline. It can be achieved by creating a ping session and sending/parsing ICMP echo packets periodically.

To make this internal procedure much easier for users, ESP-IDF provides some out-of-box APIs.

Create a new ping session To create a ping session, you need to fill in the `esp_ping_config_t` configuration structure firstly, specifying target IP address, interval times, and etc. Optionally, you can also register some callback functions with the *esp_ping_callbacks_t*` structure.

Example method to create a new ping session and register callbacks:

```
static void test_on_ping_success(esp_ping_handle_t hdl, void *args)
{
    // optionally, get callback arguments
    // const char* str = (const char*) args;
    // printf("%s\r\n", str); // "foo"
    uint8_t ttl;
    uint16_t seqno;
    uint32_t elapsed_time, recv_len;
    ip_addr_t target_addr;
    esp_ping_get_profile(hdl, ESP_PING_PROF_SEQNO, &seqno, sizeof(seqno));
    esp_ping_get_profile(hdl, ESP_PING_PROF_TTL, &ttl, sizeof(ttl));
    esp_ping_get_profile(hdl, ESP_PING_PROF_IPADDR, &target_addr, sizeof(target_
↪addr));
    esp_ping_get_profile(hdl, ESP_PING_PROF_SIZE, &recv_len, sizeof(recv_len));
    esp_ping_get_profile(hdl, ESP_PING_PROF_TIMEGAP, &elapsed_time, sizeof(elapsed_
↪time));
    printf("%d bytes from %s icmp_seq=%d ttl=%d time=%d ms\n",
           recv_len, inet_ntoa(target_addr.u_addr.ip4), seqno, ttl, elapsed_time);
}

static void test_on_ping_timeout(esp_ping_handle_t hdl, void *args)
{
    uint16_t seqno;
    ip_addr_t target_addr;
    esp_ping_get_profile(hdl, ESP_PING_PROF_SEQNO, &seqno, sizeof(seqno));
    esp_ping_get_profile(hdl, ESP_PING_PROF_IPADDR, &target_addr, sizeof(target_
↪addr));
    printf("From %s icmp_seq=%d timeout\n", inet_ntoa(target_addr.u_addr.ip4),␣
↪seqno);
}

static void test_on_ping_end(esp_ping_handle_t hdl, void *args)
{
    uint32_t transmitted;
    uint32_t received;
    uint32_t total_time_ms;

    esp_ping_get_profile(hdl, ESP_PING_PROF_REQUEST, &transmitted,␣
↪sizeof(transmitted));
    esp_ping_get_profile(hdl, ESP_PING_PROF_REPLY, &received, sizeof(received));
    esp_ping_get_profile(hdl, ESP_PING_PROF_DURATION, &total_time_ms, sizeof(total_
↪time_ms));
    printf("%d packets transmitted, %d received, time %dms\n", transmitted,␣
↪received, total_time_ms);
}

void initialize_ping()
{
    /* convert URL to IP address */
    ip_addr_t target_addr;
    struct addrinfo hint;
    struct addrinfo *res = NULL;
    memset(&hint, 0, sizeof(hint));
    memset(&target_addr, 0, sizeof(target_addr));
    getaddrinfo("www.espressif.com", NULL, &hint, &res);
    struct in_addr addr4 = ((struct sockaddr_in *) (res->ai_addr))->sin_addr;
    inet_addr_to_ip4addr(ip_2_ip4(&target_addr), &addr4);
    freeaddrinfo(res);

    esp_ping_config_t ping_config = ESP_PING_DEFAULT_CONFIG();
    ping_config.target_addr = target_addr;          // target IP address
    ping_config.count = ESP_PING_COUNT_INFINITE;    // ping in infinite mode, esp_
↪ping_stop can stop it
```

(continues on next page)

(continued from previous page)

```
    /* set callback functions */
    esp_ping_callbacks_t cbs;
    cbs.on_ping_success = test_on_ping_success;
    cbs.on_ping_timeout = test_on_ping_timeout;
    cbs.on_ping_end = test_on_ping_end;
    cbs.cb_args = "foo";  // arguments that will feed to all callback functions,␣
↪can be NULL
    cbs.cb_args = eth_event_group;

    esp_ping_handle_t ping;
    esp_ping_new_session(&ping_config, &cbs, &ping);
}
```

Start and Stop ping session You can start and stop ping session with the handle returned by `esp_ping_new_session`. Note that, the ping session won't start automatically after creation. If the ping session is stopped, and restart again, the sequence number in ICMP packets will recount from zero again.

Delete a ping session If a ping session won't be used any more, you can delete it with `esp_ping_delete_session`. Please make sure the ping session is in stop state (i.e. you have called `esp_ping_stop` before or the ping session has finished all the procedures) when you call this function.

Get runtime statistics As the example code above, you can call `esp_ping_get_profile` to get different runtime statistics of ping session in the callback function.

Application Example

ICMP echo example: protocols/icmp_echo

API Reference

Header File

- components/lwip/include/apps/ping/ping_sock.h

Functions

esp_err_t **esp_ping_new_session**(const *esp_ping_config_t* *config, const *esp_ping_callbacks_t* *cbs, *esp_ping_handle_t* *hdl_out)

Create a ping session.

Parameters

- **config** –ping configuration
- **cbs** –a bunch of callback functions invoked by internal ping task
- **hdl_out** –handle of ping session

Returns

- ESP_ERR_INVALID_ARG: invalid parameters (e.g. configuration is null, etc)
- ESP_ERR_NO_MEM: out of memory
- ESP_FAIL: other internal error (e.g. socket error)
- ESP_OK: create ping session successfully, user can take the ping handle to do follow-on jobs

esp_err_t **esp_ping_delete_session**(*esp_ping_handle_t* hdl)

Delete a ping session.

Parameters **hdl** –handle of ping session

Returns
- ESP_ERR_INVALID_ARG: invalid parameters (e.g. ping handle is null, etc)
- ESP_OK: delete ping session successfully

esp_err_t **esp_ping_start**(*esp_ping_handle_t* hdl)

Start the ping session.

Parameters **hdl** –handle of ping session
Returns
- ESP_ERR_INVALID_ARG: invalid parameters (e.g. ping handle is null, etc)
- ESP_OK: start ping session successfully

esp_err_t **esp_ping_stop**(*esp_ping_handle_t* hdl)

Stop the ping session.

Parameters **hdl** –handle of ping session
Returns
- ESP_ERR_INVALID_ARG: invalid parameters (e.g. ping handle is null, etc)
- ESP_OK: stop ping session successfully

esp_err_t **esp_ping_get_profile**(*esp_ping_handle_t* hdl, *esp_ping_profile_t* profile, void *data, uint32_t size)

Get runtime profile of ping session.

Parameters
- **hdl** –handle of ping session
- **profile** –type of profile
- **data** –profile data
- **size** –profile data size

Returns
- ESP_ERR_INVALID_ARG: invalid parameters (e.g. ping handle is null, etc)
- ESP_ERR_INVALID_SIZE: the actual profile data size doesn't match the "size" parameter
- ESP_OK: get profile successfully

Structures

struct **esp_ping_callbacks_t**

Type of "ping" callback functions.

Public Members

void ***cb_args**

arguments for callback functions

void (***on_ping_success**)(*esp_ping_handle_t* hdl, void *args)

Invoked by internal ping thread when received ICMP echo reply packet.

void (***on_ping_timeout**)(*esp_ping_handle_t* hdl, void *args)

Invoked by internal ping thread when receive ICMP echo reply packet timeout.

void (***on_ping_end**)(*esp_ping_handle_t* hdl, void *args)

Invoked by internal ping thread when a ping session is finished.

struct **esp_ping_config_t**

Type of "ping" configuration.

Public Members

uint32_t **count**

A "ping" session contains count procedures

uint32_t **interval_ms**

Milliseconds between each ping procedure

uint32_t **timeout_ms**

Timeout value (in milliseconds) of each ping procedure

uint32_t **data_size**

Size of the data next to ICMP packet header

int **tos**

Type of Service, a field specified in the IP header

int **ttl**

Time to Live,a field specified in the IP header

ip_addr_t **target_addr**

Target IP address, either IPv4 or IPv6

uint32_t **task_stack_size**

Stack size of internal ping task

uint32_t **task_prio**

Priority of internal ping task

uint32_t **interface**

Netif index, interface=0 means NETIF_NO_INDEX

Macros

ESP_PING_DEFAULT_CONFIG()

Default ping configuration.

ESP_PING_COUNT_INFINITE

Set ping count to zero will ping target infinitely

Type Definitions

typedef void ***esp_ping_handle_t**

Type of "ping" session handle.

Enumerations

enum **esp_ping_profile_t**

Profile of ping session.

Values:

enumerator **ESP_PING_PROF_SEQNO**

Sequence number of a ping procedure

enumerator **ESP_PING_PROF_TOS**

Type of service of a ping procedure

enumerator **ESP_PING_PROF_TTL**

Time to live of a ping procedure

enumerator **ESP_PING_PROF_REQUEST**

Number of request packets sent out

enumerator **ESP_PING_PROF_REPLY**

Number of reply packets received

enumerator **ESP_PING_PROF_IPADDR**

IP address of replied target

enumerator **ESP_PING_PROF_SIZE**

Size of received packet

enumerator **ESP_PING_PROF_TIMEGAP**

Elapsed time between request and reply packet

enumerator **ESP_PING_PROF_DURATION**

Elapsed time of the whole ping session

2.4.9 ESP Local Control

Overview

ESP Local Control (**esp_local_ctrl**) component in ESP-IDF provides capability to control an ESP device over Wi-Fi + HTTPS or BLE. It provides access to application defined **properties** that are available for reading / writing via a set of configurable handlers.

Initialization of the **esp_local_ctrl** service over BLE transport is performed as follows:

```
esp_local_ctrl_config_t config = {
    .transport = ESP_LOCAL_CTRL_TRANSPORT_BLE,
    .transport_config = {
        .ble = & (protocomm_ble_config_t) {
            .device_name  = SERVICE_NAME,
            .service_uuid = {
                /* LSB <---------------------------------------
                * ---------------------------------------> MSB */
                0x21, 0xd5, 0x3b, 0x8d, 0xbd, 0x75, 0x68, 0x8a,
                0xb4, 0x42, 0xeb, 0x31, 0x4a, 0x1e, 0x98, 0x3d
            }
        }
    },
    .proto_sec = {
        .version = PROTOCOM_SEC0,
        .custom_handle = NULL,
```

(continues on next page)

(continued from previous page)

```
        .pop = NULL,
    },
    .handlers = {
        /* User defined handler functions */
        .get_prop_values = get_property_values,
        .set_prop_values = set_property_values,
        .usr_ctx         = NULL,
        .usr_ctx_free_fn = NULL
    },
    /* Maximum number of properties that may be set */
    .max_properties = 10
};

/* Start esp_local_ctrl service */
ESP_ERROR_CHECK(esp_local_ctrl_start(&config));
```

Similarly for HTTPS transport:

```
/* Set the configuration */
httpd_ssl_config_t https_conf = HTTPD_SSL_CONFIG_DEFAULT();

/* Load server certificate */
extern const unsigned char cacert_pem_start[] asm("_binary_cacert_pem_
↪start");
extern const unsigned char cacert_pem_end[]   asm("_binary_cacert_pem_end
↪");
https_conf.cacert_pem = cacert_pem_start;
https_conf.cacert_len = cacert_pem_end - cacert_pem_start;

/* Load server private key */
extern const unsigned char prvtkey_pem_start[] asm("_binary_prvtkey_pem_
↪start");
extern const unsigned char prvtkey_pem_end[]   asm("_binary_prvtkey_pem_
↪end");
https_conf.prvtkey_pem = prvtkey_pem_start;
https_conf.prvtkey_len = prvtkey_pem_end - prvtkey_pem_start;

esp_local_ctrl_config_t config = {
    .transport = ESP_LOCAL_CTRL_TRANSPORT_HTTPD,
    .transport_config = {
        .httpd = &https_conf
    },
    .proto_sec = {
        .version = PROTOCOM_SEC0,
        .custom_handle = NULL,
        .pop = NULL,
    },
    .handlers = {
        /* User defined handler functions */
        .get_prop_values = get_property_values,
        .set_prop_values = set_property_values,
        .usr_ctx         = NULL,
        .usr_ctx_free_fn = NULL
    },
    /* Maximum number of properties that may be set */
    .max_properties = 10
};

/* Start esp_local_ctrl service */
ESP_ERROR_CHECK(esp_local_ctrl_start(&config));
```

You may set security for transport in ESP local control using following options:

1. *PROTOCOM_SEC1*: specifies that end to end encryption is used.
2. *PROTOCOM_SEC0*: specifies that data will be exchanged as a plain text.
3. *PROTOCOM_SEC_CUSTOM*: you can define your own security requirement. Please note that you will also have to provide *custom_handle* of type *protocomm_security_t* * in this context.

Creating a property

Now that we know how to start the **esp_local_ctrl** service, let's add a property to it. Each property must have a unique *name* (string), a *type* (e.g. enum), *flags* (bit fields) and *size*.

The *size* is to be kept 0, if we want our property value to be of variable length (e.g. if its a string or bytestream). For fixed length property value data-types, like int, float, etc., setting the *size* field to the right value, helps **esp_local_ctrl** to perform internal checks on arguments received with write requests.

The interpretation of *type* and *flags* fields is totally upto the application, hence they may be used as enumerations, bit-fields, or even simple integers. One way is to use *type* values to classify properties, while *flags* to specify characteristics of a property.

Here is an example property which is to function as a timestamp. It is assumed that the application defines *TYPE_TIMESTAMP* and *READONLY*, which are used for setting the *type* and *flags* fields here.

```
/* Create a timestamp property */
esp_local_ctrl_prop_t timestamp = {
    .name         = "timestamp",
    .type         = TYPE_TIMESTAMP,
    .size         = sizeof(int32_t),
    .flags        = READONLY,
    .ctx          = func_get_time,
    .ctx_free_fn  = NULL
};

/* Now register the property */
esp_local_ctrl_add_property(&timestamp);
```

Also notice that there is a ctx field, which is set to point to some custom *func_get_time()*. This can be used inside the property get / set handlers to retrieve timestamp.

Here is an example of *get_prop_values()* handler, which is used for retrieving the timestamp.

```
static esp_err_t get_property_values(size_t props_count,
                                     const esp_local_ctrl_prop_t *props,
                                     esp_local_ctrl_prop_val_t *prop_
↪values,
                                     void *usr_ctx)
{
    for (uint32_t i = 0; i < props_count; i++) {
        ESP_LOGI(TAG, "Reading %s", props[i].name);
        if (props[i].type == TYPE_TIMESTAMP) {
            /* Obtain the timer function from ctx */
            int32_t (*func_get_time)(void) = props[i].ctx;

            /* Use static variable for saving the value.
             * This is essential because the value has to be
             * valid even after this function returns.
             * Alternative is to use dynamic allocation
             * and set the free_fn field */
            static int32_t ts = func_get_time();
            prop_values[i].data = &ts;
        }
    }
    return ESP_OK;
}
```

Here is an example of *set_prop_values()* handler. Notice how we restrict from writing to read-only properties.

```
static esp_err_t set_property_values(size_t props_count,
                                     const esp_local_ctrl_prop_t *props,
                                     const esp_local_ctrl_prop_val_t␣
↪*prop_values,
                                     void *usr_ctx)
{
    for (uint32_t i = 0; i < props_count; i++) {
        if (props[i].flags & READONLY) {
            ESP_LOGE(TAG, "Cannot write to read-only property %s",␣
↪props[i].name);
            return ESP_ERR_INVALID_ARG;
        } else {
            ESP_LOGI(TAG, "Setting %s", props[i].name);

            /* For keeping it simple, lets only log the incoming data */
            ESP_LOG_BUFFER_HEX_LEVEL(TAG, prop_values[i].data,
                                     prop_values[i].size, ESP_LOG_INFO);
        }
    }
    return ESP_OK;
}
```

For complete example see protocols/esp_local_ctrl

Client Side Implementation

The client side implementation will have establish a protocomm session with the device first, over the supported mode of transport, and then send and receive protobuf messages understood by the **esp_local_ctrl** service. The service will translate these messages into requests and then call the appropriate handlers (set / get). Then, the generated response for each handler is again packed into a protobuf message and transmitted back to the client.

See below the various protobuf messages understood by the **esp_local_ctrl** service:

1. *get_prop_count* : This should simply return the total number of properties supported by the service
2. *get_prop_values* : This accepts an array of indices and should return the information (name, type, flags) and values of the properties corresponding to those indices
3. *set_prop_values* : This accepts an array of indices and an array of new values, which are used for setting the values of the properties corresponding to the indices

Note that indices may or may not be the same for a property, across multiple sessions. Therefore, the client must only use the names of the properties to uniquely identify them. So, every time a new session is established, the client should first call *get_prop_count* and then *get_prop_values*, hence form an index to name mapping for all properties. Now when calling *set_prop_values* for a set of properties, it must first convert the names to indexes, using the created mapping. As emphasized earlier, the client must refresh the index to name mapping every time a new session is established with the same device.

The various protocomm endpoints provided by **esp_local_ctrl** are listed below:

Table 7: Endpoints provided by ESP Local Control

Endpoint Name (BLE + GATT Server)	URI (HTTPS Server + mDNS)	Description
esp_local_ctrl/version	https://<mdns-hostname>.local/esp_local_ctrl/version	Endpoint used for retrieving version string
esp_local_ctrl/control	https://<mdns-hostname>.local/esp_local_ctrl/control	Endpoint used for sending / receiving control messages

API Reference

Header File

- components/esp_local_ctrl/include/esp_local_ctrl.h

Functions

const *esp_local_ctrl_transport_t* ***esp_local_ctrl_get_transport_ble**(void)

Function for obtaining BLE transport mode.

const *esp_local_ctrl_transport_t* ***esp_local_ctrl_get_transport_httpd**(void)

Function for obtaining HTTPD transport mode.

esp_err_t **esp_local_ctrl_start**(const *esp_local_ctrl_config_t* *config)

Start local control service.

Parameters **config** – **[in]** Pointer to configuration structure

Returns

- ESP_OK : Success
- ESP_FAIL : Failure

esp_err_t **esp_local_ctrl_stop**(void)

Stop local control service.

esp_err_t **esp_local_ctrl_add_property**(const *esp_local_ctrl_prop_t* *prop)

Add a new property.

This adds a new property and allocates internal resources for it. The total number of properties that could be added is limited by configuration option `max_properties`

Parameters **prop** – **[in]** Property description structure

Returns

- ESP_OK : Success
- ESP_FAIL : Failure

esp_err_t **esp_local_ctrl_remove_property**(const char *name)

Remove a property.

This finds a property by name, and releases the internal resources which are associated with it.

Parameters **name** – **[in]** Name of the property to remove

Returns

- ESP_OK : Success
- ESP_ERR_NOT_FOUND : Failure

const *esp_local_ctrl_prop_t* ***esp_local_ctrl_get_property**(const char *name)

Get property description structure by name.

This API may be used to get a property' s context structure `esp_local_ctrl_prop_t` when its name is known

Parameters **name** – **[in]** Name of the property to find

Returns

- Pointer to property
- NULL if not found

esp_err_t **esp_local_ctrl_set_handler**(const char *ep_name, *protocomm_req_handler_t* handler, void *user_ctx)

Register protocomm handler for a custom endpoint.

This API can be called by the application to register a protocomm handler for an endpoint after the local control service has started.

Note: In case of BLE transport the names and uuids of all custom endpoints must be provided beforehand as a part of the `protocomm_ble_config_t` structure set in `esp_local_ctrl_config_t`, and passed to `esp_local_ctrl_start()`.

Parameters

- **`ep_name`** –**[in]** Name of the endpoint
- **`handler`** –**[in]** Endpoint handler function
- **`user_ctx`** –**[in]** User data

Returns

- ESP_OK : Success
- ESP_FAIL : Failure

Unions

union **`esp_local_ctrl_transport_config_t`**

#include <esp_local_ctrl.h> Transport mode (BLE / HTTPD) configuration.

Public Members

esp_local_ctrl_transport_config_ble_t ***`ble`**

This is same as `protocomm_ble_config_t`. See `protocomm_ble.h` for available configuration parameters.

esp_local_ctrl_transport_config_httpd_t ***`httpd`**

This is same as `httpd_ssl_config_t`. See `esp_https_server.h` for available configuration parameters.

Structures

struct **`esp_local_ctrl_prop`**

Property description data structure, which is to be populated and passed to the `esp_local_ctrl_add_property()` function.

Once a property is added, its structure is available for read-only access inside `get_prop_values()` and `set_prop_values()` handlers.

Public Members

char ***`name`**

Unique name of property

uint32_t **`type`**

Type of property. This may be set to application defined enums

size_t **`size`**

Size of the property value, which:

- if zero, the property can have values of variable size
- if non-zero, the property can have values of fixed size only, therefore, checks are performed internally by esp_local_ctrl when setting the value of such a property

uint32_t **flags**

Flags set for this property. This could be a bit field. A flag may indicate property behavior, e.g. read-only / constant

void ***ctx**

Pointer to some context data relevant for this property. This will be available for use inside the `get_prop_values` and `set_prop_values` handlers as a part of this property structure. When set, this is valid throughout the lifetime of a property, till either the property is removed or the esp_local_ctrl service is stopped.

void (***ctx_free_fn**)(void *ctx)

Function used by esp_local_ctrl to internally free the property context when `esp_local_ctrl_remove_property()` or `esp_local_ctrl_stop()` is called.

struct **esp_local_ctrl_prop_val**

Property value data structure. This gets passed to the `get_prop_values()` and `set_prop_values()` handlers for the purpose of retrieving or setting the present value of a property.

Public Members

void ***data**

Pointer to memory holding property value

size_t **size**

Size of property value

void (***free_fn**)(void *data)

This may be set by the application in `get_prop_values()` handler to tell `esp_local_ctrl` to call this function on the data pointer above, for freeing its resources after sending the `get_prop_values` response.

struct **esp_local_ctrl_handlers**

Handlers for receiving and responding to local control commands for getting and setting properties.

Public Members

esp_err_t (***get_prop_values**)(size_t props_count, const *esp_local_ctrl_prop_t* props[], *esp_local_ctrl_prop_val_t* prop_values[], void *usr_ctx)

Handler function to be implemented for retrieving current values of properties.

Note: If any of the properties have fixed sizes, the size field of corresponding element in `prop_values` need to be set

---

Param props_count **[in]** Total elements in the props array

Param props **[in]** Array of properties, the current values for which have been requested by the client

Param prop_values **[out]** Array of empty property values, the elements of which need to be populated with the current values of those properties specified by props argument

Param usr_ctx **[in]** This provides value of the `usr_ctx` field of `esp_local_ctrl_handlers_t` structure

Return Returning different error codes will convey the corresponding protocol level errors to the client :
- ESP_OK : Success
- ESP_ERR_INVALID_ARG : InvalidArgument
- ESP_ERR_INVALID_STATE : InvalidProto
- All other error codes : InternalError

esp_err_t (***set_prop_values**)(size_t props_count, const *esp_local_ctrl_prop_t* props[], const *esp_local_ctrl_prop_val_t* prop_values[], void *usr_ctx)

Handler function to be implemented for changing values of properties.

Note: If any of the properties have variable sizes, the size field of the corresponding element in `prop_values` must be checked explicitly before making any assumptions on the size.

Param props_count **[in]** Total elements in the props array
Param props **[in]** Array of properties, the values for which the client requests to change
Param prop_values **[in]** Array of property values, the elements of which need to be used for updating those properties specified by props argument
Param usr_ctx **[in]** This provides value of the `usr_ctx` field of `esp_local_ctrl_handlers_t` structure
Return Returning different error codes will convey the corresponding protocol level errors to the client :
- ESP_OK : Success
- ESP_ERR_INVALID_ARG : InvalidArgument
- ESP_ERR_INVALID_STATE : InvalidProto
- All other error codes : InternalError

void ***usr_ctx**

Context pointer to be passed to above handler functions upon invocation. This is different from the property level context, as this is valid throughout the lifetime of the `esp_local_ctrl` service, and freed only when the service is stopped.

void (***usr_ctx_free_fn**)(void *usr_ctx)

Pointer to function which will be internally invoked on `usr_ctx` for freeing the context resources when `esp_local_ctrl_stop()` is called.

struct **esp_local_ctrl_proto_sec_cfg**

Protocom security configs

Public Members

esp_local_ctrl_proto_sec_t **version**

This sets protocom security version, sec0/sec1 or custom If custom, user must provide handle via `proto_sec_custom_handle` below

void ***custom_handle**

Custom security handle if security is set custom via `proto_sec` above This handle must follow `protocomm_security_t` signature

void ***pop**

Proof of possession to be used for local control. Could be NULL.

struct **esp_local_ctrl_config**

Configuration structure to pass to `esp_local_ctrl_start()`

Public Members

const *esp_local_ctrl_transport_t* ***transport**

Transport layer over which service will be provided

esp_local_ctrl_transport_config_t **transport_config**

Transport layer over which service will be provided

esp_local_ctrl_proto_sec_cfg_t **proto_sec**

Security version and POP

esp_local_ctrl_handlers_t **handlers**

Register handlers for responding to get/set requests on properties

size_t **max_properties**

This limits the number of properties that are available at a time

Macros

ESP_LOCAL_CTRL_TRANSPORT_BLE

ESP_LOCAL_CTRL_TRANSPORT_HTTPD

Type Definitions

typedef struct *esp_local_ctrl_prop* **esp_local_ctrl_prop_t**

Property description data structure, which is to be populated and passed to the `esp_local_ctrl_add_property()` function.

Once a property is added, its structure is available for read-only access inside `get_prop_values()` and `set_prop_values()` handlers.

typedef struct *esp_local_ctrl_prop_val* **esp_local_ctrl_prop_val_t**

Property value data structure. This gets passed to the `get_prop_values()` and `set_prop_values()` handlers for the purpose of retrieving or setting the present value of a property.

typedef struct *esp_local_ctrl_handlers* **esp_local_ctrl_handlers_t**

Handlers for receiving and responding to local control commands for getting and setting properties.

typedef struct esp_local_ctrl_transport **esp_local_ctrl_transport_t**

Transport mode (BLE / HTTPD) over which the service will be provided.

This is forward declaration of a private structure, implemented internally by `esp_local_ctrl`.

typedef struct *protocomm_ble_config* **esp_local_ctrl_transport_config_ble_t**

Configuration for transport mode BLE.

This is a forward declaration for `protocomm_ble_config_t`. To use this, application must set CONFIG_BT_BLUEDROID_ENABLED and include `protocomm_ble.h`.

typedef struct *httpd_ssl_config* **esp_local_ctrl_transport_config_httpd_t**

Configuration for transport mode HTTPD.

This is a forward declaration for `httpd_ssl_config_t`. To use this, application must set CONFIG_ESP_HTTPS_SERVER_ENABLE and include `esp_https_server.h`

typedef enum *esp_local_ctrl_proto_sec* **esp_local_ctrl_proto_sec_t**

Security types for esp_local_control.

typedef struct *esp_local_ctrl_proto_sec_cfg* **esp_local_ctrl_proto_sec_cfg_t**

Protocom security configs

typedef struct *esp_local_ctrl_config* **esp_local_ctrl_config_t**

Configuration structure to pass to `esp_local_ctrl_start()`

Enumerations

enum **esp_local_ctrl_proto_sec**

Security types for esp_local_control.

Values:

enumerator **PROTOCOM_SEC0**

enumerator **PROTOCOM_SEC1**

enumerator **PROTOCOM_SEC_CUSTOM**

2.4.10 mDNS Service

Overview

mDNS is a multicast UDP service that is used to provide local network service and host discovery.

mDNS is installed by default on most operating systems or is available as separate package. On `Mac OS` it is installed by default and is called `Bonjour`. Apple releases an installer for `Windows` that can be found on Apple's support page. On `Linux`, mDNS is provided by avahi and is usually installed by default.

mDNS Properties

- `hostname`: the hostname that the device will respond to. If not set, the `hostname` will be read from the interface. Example: `my-esp32` will resolve to `my-esp32.local`
- `default_instance`: friendly name for your device, like `Jhon's ESP32 Thing`. If not set, `hostname` will be used.

Example method to start mDNS for the STA interface and set `hostname` and `default_instance`:

```
void start_mdns_service()
{
    //initialize mDNS service
    esp_err_t err = mdns_init();
```

(continues on next page)

(continued from previous page)

```
    if (err) {
        printf("MDNS Init failed: %d\n", err);
        return;
    }

    //set hostname
    mdns_hostname_set("my-esp32");
    //set default instance
    mdns_instance_name_set("Jhon's ESP32 Thing");
}
```

mDNS Services mDNS can advertise information about network services that your device offers. Each service is defined by a few properties.

- `instance_name`: friendly name for your service, like `Jhon's EESP32 Web Server`. If not defined, `default_instance` will be used.
- `service_type`: (required) service type, prepended with underscore. Some common types can be found here.
- `proto`: (required) protocol that the service runs on, prepended with underscore. Example: `_tcp` or `_udp`
- `port`: (required) network port that the service runs on
- `txt`: `{var, val}` array of strings, used to define properties for your service

Example method to add a few services and different properties:

```
void add_mdns_services()
{
    //add our services
    mdns_service_add(NULL, "_http", "_tcp", 80, NULL, 0);
    mdns_service_add(NULL, "_arduino", "_tcp", 3232, NULL, 0);
    mdns_service_add(NULL, "_myservice", "_udp", 1234, NULL, 0);

    //NOTE: services must be added before their properties can be set
    //use custom instance for the web server
    mdns_service_instance_name_set("_http", "_tcp", "Jhon's ESP32 Web Server");

    mdns_txt_item_t serviceTxtData[3] = {
        {"board","{esp32}"},
        {"u","user"},
        {"p","password"}
    };
    //set txt data for service (will free and replace current data)
    mdns_service_txt_set("_http", "_tcp", serviceTxtData, 3);

    //change service port
    mdns_service_port_set("_myservice", "_udp", 4321);
}
```

mDNS Query mDNS provides methods for browsing for services and resolving host' s IP/IPv6 addresses.

Results for services are returned as a linked list of `mdns_result_t` objects.

Example method to resolve host IPs:

```
void resolve_mdns_host(const char * host_name)
{
    printf("Query A: %s.local", host_name);

    struct ip4_addr addr;
    addr.addr = 0;
```

(continues on next page)

(continued from previous page)

```
    esp_err_t err = mdns_query_a(host_name, 2000,  &addr);
    if(err){
        if(err == ESP_ERR_NOT_FOUND){
            printf("Host was not found!");
            return;
        }
        printf("Query Failed");
        return;
    }

    printf(IPSTR, IP2STR(&addr));
}
```

Example method to resolve local services:

```
static const char * if_str[] = {"STA", "AP", "ETH", "MAX"};
static const char * ip_protocol_str[] = {"V4", "V6", "MAX"};

void mdns_print_results(mdns_result_t * results){
    mdns_result_t * r = results;
    mdns_ip_addr_t * a = NULL;
    int i = 1, t;
    while(r){
        printf("%d: Interface: %s, Type: %s\n", i++, if_str[r->tcpip_if], ip_
↪protocol_str[r->ip_protocol]);
        if(r->instance_name){
            printf("  PTR : %s\n", r->instance_name);
        }
        if(r->hostname){
            printf("  SRV : %s.local:%u\n", r->hostname, r->port);
        }
        if(r->txt_count){
            printf("  TXT : [%u] ", r->txt_count);
            for(t=0; t<r->txt_count; t++){
                printf("%s=%s; ", r->txt[t].key, r->txt[t].value);
            }
            printf("\n");
        }
        a = r->addr;
        while(a){
            if(a->addr.type == IPADDR_TYPE_V6){
                printf("  AAAA: " IPV6STR "\n", IPV62STR(a->addr.u_addr.ip6));
            } else {
                printf("  A   : " IPSTR "\n", IP2STR(&(a->addr.u_addr.ip4)));
            }
            a = a->next;
        }
        r = r->next;
    }

}

void find_mdns_service(const char * service_name, const char * proto)
{
    ESP_LOGI(TAG, "Query PTR: %s.%s.local", service_name, proto);

    mdns_result_t * results = NULL;
    esp_err_t err = mdns_query_ptr(service_name, proto, 3000, 20,  &results);
    if(err){
        ESP_LOGE(TAG, "Query Failed");
```

(continues on next page)

(continued from previous page)

```
        return;
    }
    if(!results){
        ESP_LOGW(TAG, "No results found!");
        return;
    }

    mdns_print_results(results);
    mdns_query_results_free(results);
}
```

Example of using the methods above:

```
void my_app_some_method(){
    //search for esp32-mdns.local
    resolve_mdns_host("esp32-mdns");

    //search for HTTP servers
    find_mdns_service("_http", "_tcp");
    //or file servers
    find_mdns_service("_smb", "_tcp"); //windows sharing
    find_mdns_service("_afpovertcp", "_tcp"); //apple sharing
    find_mdns_service("_nfs", "_tcp"); //NFS server
    find_mdns_service("_ftp", "_tcp"); //FTP server
    //or networked printer
    find_mdns_service("_printer", "_tcp");
    find_mdns_service("_ipp", "_tcp");
}
```

Application Example

mDNS server/scanner example: protocols/mdns.

API Reference

Header File

- components/mdns/include/mdns.h

Functions

esp_err_t **mdns_init**(void)

Initialize mDNS on given interface.

Returns

- ESP_OK on success
- ESP_ERR_INVALID_STATE when failed to register event handler
- ESP_ERR_NO_MEM on memory error
- ESP_FAIL when failed to start mdns task

void **mdns_free**(void)

Stop and free mDNS server.

esp_err_t **mdns_hostname_set**(const char *hostname)

Set the hostname for mDNS server required if you want to advertise services.

Parameters **hostname** –Hostname to set

Returns

- ESP_OK success
- ESP_ERR_INVALID_ARG Parameter error

- ESP_ERR_NO_MEM memory error

esp_err_t **mdns_delegate_hostname_add**(const char *hostname, const *mdns_ip_addr_t* *address_list)

Adds a hostname and address to be delegated A/AAAA queries will be replied for the hostname and services can be added to this host.

Parameters
- **hostname** –Hostname to add
- **address_list** –The IP address list of the host

Returns
- ESP_OK success
- ESP_ERR_INVALID_STATE mDNS is not running
- ESP_ERR_INVALID_ARG Parameter error
- ESP_ERR_NO_MEM memory error

esp_err_t **mdns_delegate_hostname_remove**(const char *hostname)

Remove a delegated hostname All the services added to this host will also be removed.

Parameters **hostname** –Hostname to remove

Returns
- ESP_OK success
- ESP_ERR_INVALID_STATE mDNS is not running
- ESP_ERR_INVALID_ARG Parameter error
- ESP_ERR_NO_MEM memory error

bool **mdns_hostname_exists**(const char *hostname)

Query whether a hostname has been added.

Parameters **hostname** –Hostname to query

Returns
- true The hostname has been added.
- false The hostname has not been added.

esp_err_t **mdns_instance_name_set**(const char *instance_name)

Set the default instance name for mDNS server.

Parameters **instance_name** –Instance name to set

Returns
- ESP_OK success
- ESP_ERR_INVALID_ARG Parameter error
- ESP_ERR_NO_MEM memory error

esp_err_t **mdns_service_add**(const char *instance_name, const char *service_type, const char *proto, uint16_t port, *mdns_txt_item_t* txt[], size_t num_items)

Add service to mDNS server.

Note: The value length of txt items will be automatically decided by strlen

---

Parameters
- **instance_name** –instance name to set. If NULL, global instance name or hostname will be used. Note that MDNS_MULTIPLE_INSTANCE config option needs to be enabled for adding multiple instances with the same instance type.
- **service_type** –service type (_http, _ftp, etc)
- **proto** –service protocol (_tcp, _udp)
- **port** –service port
- **txt** –string array of TXT data (eg. {{ “var” ,” val” },{ “other” ,” 2” }})
- **num_items** –number of items in TXT data

Returns
- ESP_OK success
- ESP_ERR_INVALID_ARG Parameter error

- ESP_ERR_NO_MEM memory error
- ESP_FAIL failed to add service

esp_err_t **mdns_service_add_for_host**(const char *instance_name, const char *service_type, const char *proto, const char *hostname, uint16_t port, *mdns_txt_item_t* txt[], size_t num_items)

Add service to mDNS server with a delegated hostname.

Note: The value length of txt items will be automatically decided by strlen

---

Parameters

- **instance_name** –instance name to set. If NULL, global instance name or hostname will be used Note that MDNS_MULTIPLE_INSTANCE config option needs to be enabled for adding multiple instances with the same instance type.
- **service_type** –service type (_http, _ftp, etc)
- **proto** –service protocol (_tcp, _udp)
- **hostname** –service hostname. If NULL, local hostname will be used.
- **port** –service port
- **txt** –string array of TXT data (eg. {{ “var” ,” val” },{ “other” ,” 2” }})
- **num_items** –number of items in TXT data

Returns

- ESP_OK success
- ESP_ERR_INVALID_ARG Parameter error
- ESP_ERR_NO_MEM memory error
- ESP_FAIL failed to add service

bool **mdns_service_exists**(const char *service_type, const char *proto, const char *hostname)

Check whether a service has been added.

Parameters

- **service_type** –service type (_http, _ftp, etc)
- **proto** –service protocol (_tcp, _udp)
- **hostname** –service hostname. If NULL, checks for the local hostname.

Returns

- true Correspondding service has been added.
- false Service not found.

bool **mdns_service_exists_with_instance**(const char *instance, const char *service_type, const char *proto, const char *hostname)

Check whether a service has been added.

Parameters

- **instance** –instance name
- **service_type** –service type (_http, _ftp, etc)
- **proto** –service protocol (_tcp, _udp)
- **hostname** –service hostname. If NULL, checks for the local hostname.

Returns

- true Correspondding service has been added.
- false Service not found.

esp_err_t **mdns_service_remove**(const char *service_type, const char *proto)

Remove service from mDNS server.

Parameters

- **service_type** –service type (_http, _ftp, etc)
- **proto** –service protocol (_tcp, _udp)

Returns

- ESP_OK success

- ESP_ERR_INVALID_ARG Parameter error
- ESP_ERR_NOT_FOUND Service not found
- ESP_ERR_NO_MEM memory error

esp_err_t **mdns_service_remove_for_host**(const char *service_type, const char *proto, const char *hostname)

Remove service from mDNS server with hostname.

Parameters
- **service_type** –service type (_http, _ftp, etc)
- **proto** –service protocol (_tcp, _udp)
- **hostname** –service hostname. If NULL, local hostname will be used.

Returns
- ESP_OK success
- ESP_ERR_INVALID_ARG Parameter error
- ESP_ERR_NOT_FOUND Service not found
- ESP_ERR_NO_MEM memory error

esp_err_t **mdns_service_instance_name_set**(const char *service_type, const char *proto, const char *instance_name)

Set instance name for service.

Parameters
- **service_type** –service type (_http, _ftp, etc)
- **proto** –service protocol (_tcp, _udp)
- **instance_name** –instance name to set

Returns
- ESP_OK success
- ESP_ERR_INVALID_ARG Parameter error
- ESP_ERR_NOT_FOUND Service not found
- ESP_ERR_NO_MEM memory error

esp_err_t **mdns_service_instance_name_set_for_host**(const char *service_type, const char *proto, const char *hostname, const char *instance_name)

Set instance name for service with hostname.

Parameters
- **service_type** –service type (_http, _ftp, etc)
- **proto** –service protocol (_tcp, _udp)
- **hostname** –service hostname. If NULL, local hostname will be used.
- **instance_name** –instance name to set

Returns
- ESP_OK success
- ESP_ERR_INVALID_ARG Parameter error
- ESP_ERR_NOT_FOUND Service not found
- ESP_ERR_NO_MEM memory error

esp_err_t **mdns_service_port_set**(const char *service_type, const char *proto, uint16_t port)

Set service port.

Parameters
- **service_type** –service type (_http, _ftp, etc)
- **proto** –service protocol (_tcp, _udp)
- **port** –service port

Returns
- ESP_OK success
- ESP_ERR_INVALID_ARG Parameter error
- ESP_ERR_NOT_FOUND Service not found
- ESP_ERR_NO_MEM memory error

esp_err_t **mdns_service_port_set_for_host**(const char *service_type, const char *proto, const char *hostname, uint16_t port)

Set service port with hostname.

Parameters

- **service_type** –service type (_http, _ftp, etc)
- **proto** –service protocol (_tcp, _udp)
- **hostname** –service hostname. If NULL, local hostname will be used.
- **port** –service port

Returns

- ESP_OK success
- ESP_ERR_INVALID_ARG Parameter error
- ESP_ERR_NOT_FOUND Service not found
- ESP_ERR_NO_MEM memory error

esp_err_t **mdns_service_txt_set**(const char *service_type, const char *proto, *mdns_txt_item_t* txt[], uint8_t num_items)

Replace all TXT items for service.

Note: The value length of txt items will be automatically decided by strlen

---

Parameters

- **service_type** –service type (_http, _ftp, etc)
- **proto** –service protocol (_tcp, _udp)
- **txt** –array of TXT data (eg. {{ “var” ,” val” },{ “other” ,” 2” }})
- **num_items** –number of items in TXT data

Returns

- ESP_OK success
- ESP_ERR_INVALID_ARG Parameter error
- ESP_ERR_NOT_FOUND Service not found
- ESP_ERR_NO_MEM memory error

esp_err_t **mdns_service_txt_set_for_host**(const char *service_type, const char *proto, const char *hostname, *mdns_txt_item_t* txt[], uint8_t num_items)

Replace all TXT items for service with hostname.

Note: The value length of txt items will be automatically decided by strlen

---

Parameters

- **service_type** –service type (_http, _ftp, etc)
- **proto** –service protocol (_tcp, _udp)
- **hostname** –service hostname. If NULL, local hostname will be used.
- **txt** –array of TXT data (eg. {{ “var” ,” val” },{ “other” ,” 2” }})
- **num_items** –number of items in TXT data

Returns

- ESP_OK success
- ESP_ERR_INVALID_ARG Parameter error
- ESP_ERR_NOT_FOUND Service not found
- ESP_ERR_NO_MEM memory error

esp_err_t **mdns_service_txt_item_set**(const char *service_type, const char *proto, const char *key, const char *value)

Set/Add TXT item for service TXT record.

Note: The value length will be automatically decided by strlen

Parameters

- **service_type** –service type (_http, _ftp, etc)
- **proto** –service protocol (_tcp, _udp)
- **key** –the key that you want to add/update
- **value** –the new value of the key

Returns

- ESP_OK success
- ESP_ERR_INVALID_ARG Parameter error
- ESP_ERR_NOT_FOUND Service not found
- ESP_ERR_NO_MEM memory error

esp_err_t **mdns_service_txt_item_set_with_explicit_value_len**(const char *service_type, const char *proto, const char *key, const char *value, uint8_t value_len)

Set/Add TXT item for service TXT record.

Parameters

- **service_type** –service type (_http, _ftp, etc)
- **proto** –service protocol (_tcp, _udp)
- **key** –the key that you want to add/update
- **value** –the new value of the key
- **value_len** –the length of the value

Returns

- ESP_OK success
- ESP_ERR_INVALID_ARG Parameter error
- ESP_ERR_NOT_FOUND Service not found
- ESP_ERR_NO_MEM memory error

esp_err_t **mdns_service_txt_item_set_for_host**(const char *service_type, const char *proto, const char *hostname, const char *key, const char *value)

Set/Add TXT item for service TXT record with hostname.

Note: The value length will be automatically decided by strlen

Parameters

- **service_type** –service type (_http, _ftp, etc)
- **proto** –service protocol (_tcp, _udp)
- **hostname** –service hostname. If NULL, local hostname will be used.
- **key** –the key that you want to add/update
- **value** –the new value of the key

Returns

- ESP_OK success
- ESP_ERR_INVALID_ARG Parameter error
- ESP_ERR_NOT_FOUND Service not found
- ESP_ERR_NO_MEM memory error

esp_err_t **mdns_service_txt_item_set_for_host_with_explicit_value_len**(const char *service_type, const char *proto, const char *hostname, const char *key, const char *value, uint8_t value_len)

Set/Add TXT item for service TXT record with hostname and txt value length.

Parameters

- **service_type** –service type (_http, _ftp, etc)
- **proto** –service protocol (_tcp, _udp)
- **hostname** –service hostname. If NULL, local hostname will be used.
- **key** –the key that you want to add/update
- **value** –the new value of the key
- **value_len** –the length of the value

Returns

- ESP_OK success
- ESP_ERR_INVALID_ARG Parameter error
- ESP_ERR_NOT_FOUND Service not found
- ESP_ERR_NO_MEM memory error

esp_err_t **mdns_service_txt_item_remove**(const char *service_type, const char *proto, const char *key)

Remove TXT item for service TXT record.

Parameters

- **service_type** –service type (_http, _ftp, etc)
- **proto** –service protocol (_tcp, _udp)
- **key** –the key that you want to remove

Returns

- ESP_OK success
- ESP_ERR_INVALID_ARG Parameter error
- ESP_ERR_NOT_FOUND Service not found
- ESP_ERR_NO_MEM memory error

esp_err_t **mdns_service_txt_item_remove_for_host**(const char *service_type, const char *proto, const char *hostname, const char *key)

Remove TXT item for service TXT record with hostname.

Parameters

- **service_type** –service type (_http, _ftp, etc)
- **proto** –service protocol (_tcp, _udp)
- **hostname** –service hostname. If NULL, local hostname will be used.
- **key** –the key that you want to remove

Returns

- ESP_OK success
- ESP_ERR_INVALID_ARG Parameter error
- ESP_ERR_NOT_FOUND Service not found
- ESP_ERR_NO_MEM memory error

esp_err_t **mdns_service_remove_all**(void)

Remove and free all services from mDNS server.

Returns

- ESP_OK success
- ESP_ERR_INVALID_ARG Parameter error

esp_err_t **mdns_query_async_delete**(*mdns_search_once_t* *search)

Deletes the finished query. Call this only after the search has ended!

Parameters **search** –pointer to search object

Returns

- ESP_OK success
- ESP_ERR_INVALID_STATE search has not finished
- ESP_ERR_INVALID_ARG pointer to search object is NULL

bool **mdns_query_async_get_results**(*mdns_search_once_t* *search, uint32_t timeout, *mdns_result_t* **results)

Get results from search pointer. Results available as a pointer to the output parameter. Pointer to search object has to be deleted via `mdns_query_async_delete` once the query has finished. The results although have to be freed manually.

Parameters

- **search** –pointer to search object
- **timeout** –time in milliseconds to wait for answers
- **results** –pointer to the results of the query

Returns True if search has finished before or at timeout False if search timeout is over

mdns_search_once_t ***mdns_query_async_new**(const char *name, const char *service_type, const char *proto, uint16_t type, uint32_t timeout, size_t max_results, *mdns_query_notify_t* notifier)

Query mDNS for host or service asynchronously. Search has to be tested for progress and deleted manually!

Parameters

- **name** –service instance or host name (NULL for PTR queries)
- **service_type** –service type (_http, _arduino, _ftp etc.) (NULL for host queries)
- **proto** –service protocol (_tcp, _udp, etc.) (NULL for host queries)
- **type** –type of query (MDNS_TYPE_*)
- **timeout** –time in milliseconds during which mDNS query is active
- **max_results** –maximum results to be collected
- **notifier** –Notification function to be called when the result is ready, can be NULL

Returns mdns_search_once_s pointer to new search object if query initiated successfully. NULL otherwise.

esp_err_t **mdns_query**(const char *name, const char *service_type, const char *proto, uint16_t type, uint32_t timeout, size_t max_results, *mdns_result_t* **results)

Query mDNS for host or service All following query methods are derived from this one.

Parameters

- **name** –service instance or host name (NULL for PTR queries)
- **service_type** –service type (_http, _arduino, _ftp etc.) (NULL for host queries)
- **proto** –service protocol (_tcp, _udp, etc.) (NULL for host queries)
- **type** –type of query (MDNS_TYPE_*)
- **timeout** –time in milliseconds to wait for answers.
- **max_results** –maximum results to be collected
- **results** –pointer to the results of the query results must be freed using mdns_query_results_free below

Returns

- ESP_OK success
- ESP_ERR_INVALID_STATE mDNS is not running
- ESP_ERR_NO_MEM memory error
- ESP_ERR_INVALID_ARG timeout was not given

void **mdns_query_results_free**(*mdns_result_t* *results)

Free query results.

Parameters **results** –linked list of results to be freed

esp_err_t **mdns_query_ptr**(const char *service_type, const char *proto, uint32_t timeout, size_t max_results, *mdns_result_t* **results)

Query mDNS for service.

Parameters

- **service_type** –service type (_http, _arduino, _ftp etc.)
- **proto** –service protocol (_tcp, _udp, etc.)
- **timeout** –time in milliseconds to wait for answer.
- **max_results** –maximum results to be collected
- **results** –pointer to the results of the query

Returns

- ESP_OK success
- ESP_ERR_INVALID_STATE mDNS is not running
- ESP_ERR_NO_MEM memory error
- ESP_ERR_INVALID_ARG parameter error

esp_err_t **mdns_query_srv**(const char *instance_name, const char *service_type, const char *proto, uint32_t timeout, *mdns_result_t* **result)

Query mDNS for SRV record.

Parameters

- **instance_name** –service instance name
- **service_type** –service type (_http, _arduino, _ftp etc.)
- **proto** –service protocol (_tcp, _udp, etc.)
- **timeout** –time in milliseconds to wait for answer.
- **result** –pointer to the result of the query

Returns

- ESP_OK success
- ESP_ERR_INVALID_STATE mDNS is not running
- ESP_ERR_NO_MEM memory error
- ESP_ERR_INVALID_ARG parameter error

esp_err_t **mdns_query_txt**(const char *instance_name, const char *service_type, const char *proto, uint32_t timeout, *mdns_result_t* **result)

Query mDNS for TXT record.

Parameters

- **instance_name** –service instance name
- **service_type** –service type (_http, _arduino, _ftp etc.)
- **proto** –service protocol (_tcp, _udp, etc.)
- **timeout** –time in milliseconds to wait for answer.
- **result** –pointer to the result of the query

Returns

- ESP_OK success
- ESP_ERR_INVALID_STATE mDNS is not running
- ESP_ERR_NO_MEM memory error
- ESP_ERR_INVALID_ARG parameter error

esp_err_t **mdns_query_a**(const char *host_name, uint32_t timeout, esp_ip4_addr_t *addr)

Query mDNS for A record.

Parameters

- **host_name** –host name to look for
- **timeout** –time in milliseconds to wait for answer.
- **addr** –pointer to the resulting IP4 address

Returns

- ESP_OK success
- ESP_ERR_INVALID_STATE mDNS is not running
- ESP_ERR_NO_MEM memory error
- ESP_ERR_INVALID_ARG parameter error

esp_err_t **mdns_query_aaaa**(const char *host_name, uint32_t timeout, esp_ip6_addr_t *addr)

Query mDNS for A record.

Please note that hostname must not contain domain name, as mDNS uses '.local' domain.

Parameters

- **host_name** –host name to look for
- **timeout** –time in milliseconds to wait for answer. If 0, max_results needs to be defined
- **addr** –pointer to the resulting IP6 address

Returns

- ESP_OK success
- ESP_ERR_INVALID_STATE mDNS is not running
- ESP_ERR_NO_MEM memory error
- ESP_ERR_INVALID_ARG parameter error

esp_err_t **mdns_handle_system_event**(void *ctx, *system_event_t* *event)

System event handler This method controls the service state on all active interfaces and applications are required to call it from the system event handler for normal operation of mDNS service.

Please note that hostname must not contain domain name, as mDNS uses '.local' domain.

Parameters

- **ctx** –The system event context
- **event** –The system event

Structures

struct **mdns_txt_item_t**

mDNS basic text item structure Used in mdns_service_add()

Public Members

const char ***key**

item key name

const char ***value**

item value string

struct **mdns_ip_addr_s**

mDNS query linked list IP item

Public Members

esp_ip_addr_t **addr**

IP address

struct *mdns_ip_addr_s* ***next**

next IP, or NULL for the last IP in the list

struct **mdns_result_s**

mDNS query result structure

Public Members

struct *mdns_result_s* ***next**

next result, or NULL for the last result in the list

mdns_if_t **tcpip_if**

interface index

uint32_t **ttl**

time to live

mdns_ip_protocol_t **ip_protocol**

ip_protocol type of the interface (v4/v6)

char ***instance_name**

instance name

char ***service_type**

service type

char ***proto**

srevice protocol

char ***hostname**

hostname

uint16_t **port**

service port

mdns_txt_item_t ***txt**

txt record

uint8_t ***txt_value_len**

array of txt value len of each record

size_t **txt_count**

number of txt items

mdns_ip_addr_t ***addr**

linked list of IP addresses found

Macros

MDNS_TYPE_A

MDNS_TYPE_PTR

MDNS_TYPE_TXT

MDNS_TYPE_AAAA

MDNS_TYPE_SRV

MDNS_TYPE_OPT

MDNS_TYPE_NSEC

MDNS_TYPE_ANY

Type Definitions

typedef struct mdns_search_once_s **mdns_search_once_t**

Asynchronous query handle.

typedef struct *mdns_ip_addr_s* **mdns_ip_addr_t**

mDNS query linked list IP item

typedef enum *mdns_if_internal* **mdns_if_t**

typedef struct *mdns_result_s* **mdns_result_t**

mDNS query result structure

typedef void (***mdns_query_notify_t**)(*mdns_search_once_t* *search)

Enumerations

enum **mdns_ip_protocol_t**

mDNS enum to specify the ip_protocol type

Values:

enumerator **MDNS_IP_PROTOCOL_V4**

enumerator **MDNS_IP_PROTOCOL_V6**

enumerator **MDNS_IP_PROTOCOL_MAX**

enum **mdns_if_internal**

Values:

enumerator **MDNS_IF_STA**

enumerator **MDNS_IF_AP**

enumerator **MDNS_IF_ETH**

enumerator **MDNS_IF_MAX**

2.4.11 ESP-Modbus

Overview

The Modbus serial communication protocol is de facto standard protocol widely used to connect industrial electronic devices. Modbus allows communication among many devices connected to the same network, for example, a system that measures temperature and humidity and communicates the results to a computer. The Modbus protocol uses several types of data: Holding Registers, Input Registers, Coils (single bit output), Discrete Inputs. Versions of the Modbus protocol exist for serial port and for Ethernet and other protocols that support the Internet protocol suite. There are many variants of Modbus protocols, some of them are:

- `Modbus RTU` —This is used in serial communication and makes use of a compact, binary representation of the data for protocol communication. The RTU format follows the commands/data with a cyclic redundancy check checksum as an error check mechanism to ensure the reliability of data. Modbus RTU is the most common implementation available for Modbus. A Modbus RTU message must be transmitted continuously without inter-character hesitations. Modbus messages are framed (separated) by idle (silent) periods. The RS-485 interface communication is usually used for this type.
- `Modbus ASCII` —This is used in serial communication and makes use of ASCII characters for protocol communication. The ASCII format uses a longitudinal redundancy check checksum. Modbus ASCII messages are framed by leading colon (":") and trailing newline (CR/LF).
- `Modbus TCP/IP or Modbus TCP` —This is a Modbus variant used for communications over TCP/IP networks, connecting over port 502. It does not require a checksum calculation, as lower layers already provide checksum protection.

The following document (and included code snippets) requires some familiarity with the Modbus protocol. Refer to the Modbus Organization's with protocol specifications for specifics.

Messaging Model And Data Mapping

Modbus is an application protocol that defines rules for messaging structure and data organization that are independent of the data transmission medium. Traditional serial Modbus is a register-based protocol that defines message transactions that occur between master(s) and slave devices (multiple masters are allowed on using Modbus TCP/IP). The slave devices listen for communication from the master and simply respond as instructed. The master(s) always controls communication and may communicate directly to one slave, or all connected slaves, but the slaves cannot communicate directly with each other.

Note: It is assumed that the number of slaves and their register maps are known by the Modbus master before the start of stack.

The register map of each slave device is usually part of its device manual. A Slave device usually permits configuration of its short slave address and communication options that are used within the device's network segment.

The Modbus protocol allows devices to map data to four types of registers (Holding, Input, Discrete, Coil). The figure below illustrates an example mapping of a device's data to the four types of registers.

The following sections give an overview of how to use the ESP_Modbus component found under *components/freemodbus*. The sections cover initialization of a Modbus port, and the setup a master or slave device accordingly:

- *Modbus Port Initialization*
- *Modbus Slave API Overview*
- *Modbus Master API Overview*

Modbus Port Initialization The ESP_Modbus supports Modbus SERIAL and TCP ports and a port must be initialized before calling any other Modbus API. The functions below are used to create and then initialize Modbus controller interface (either master or slave) over a particular transmission medium (either Serial or TCP/IP):

- *`mbc_slave_init()`*

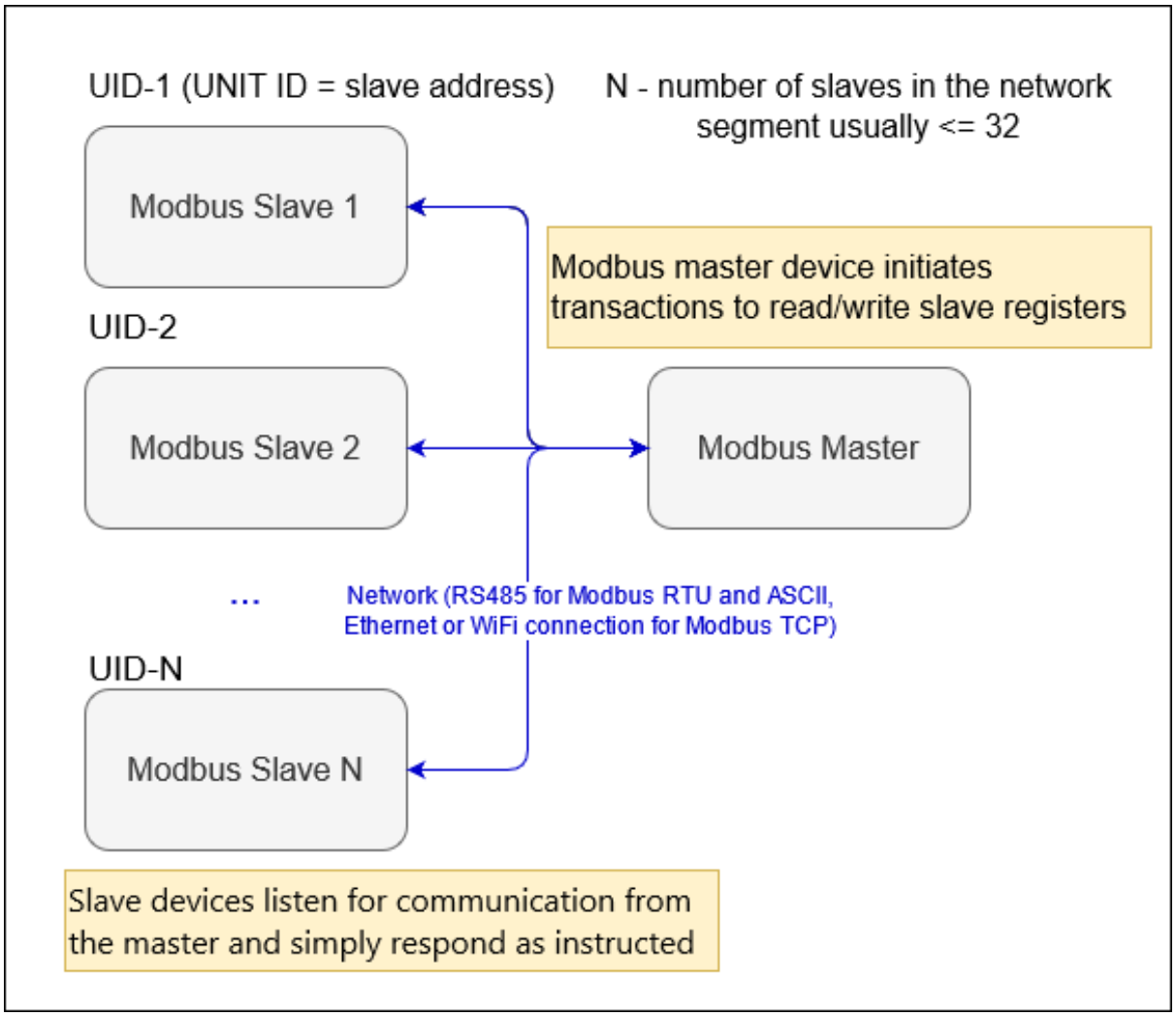

Fig. 26: Modbus segment diagram

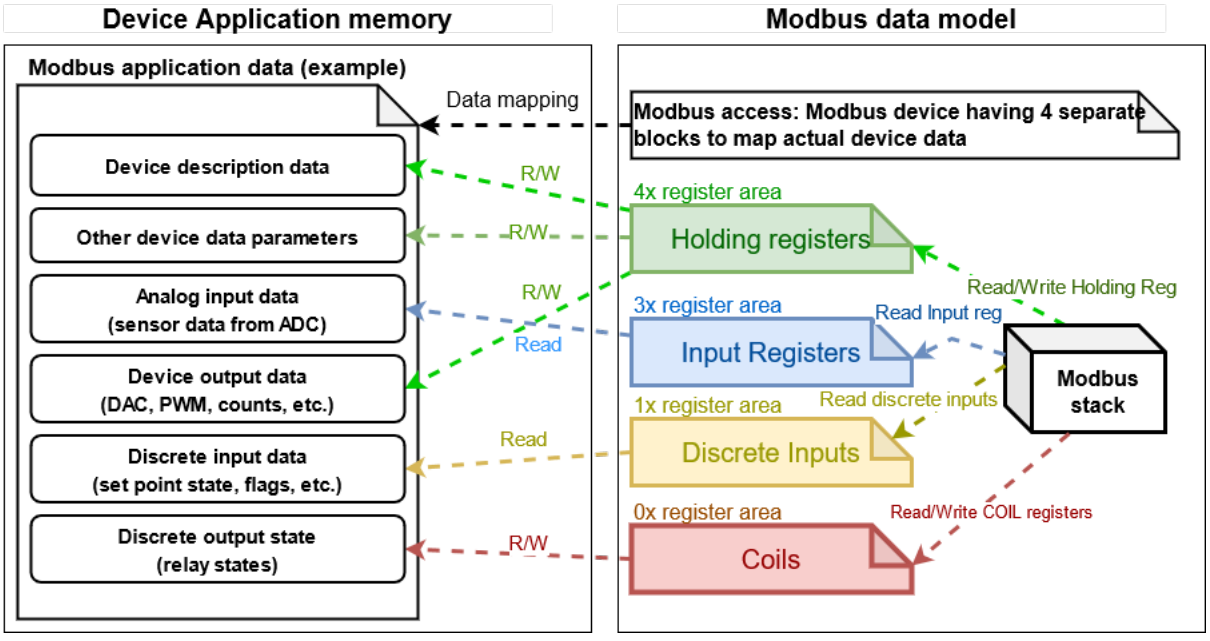

Fig. 27: Modbus data mapping

- *mbc_master_init()*
- *mbc_slave_init_tcp()*
- *mbc_master_init_tcp()*

The API call uses the first parameter to recognize the type of port being initialized. Supported enumeration for different ports: *MB_PORT_SERIAL_MASTER*, *MB_PORT_SERIAL_SLAVE* accordingly. The parameters *MB_PORT_TCP_MASTER*, *MB_PORT_TCP_SLAVE* are reserved for internal usage.

```
void* master_handler = NULL; // Pointer to allocate interface structure
// Initialization of Modbus master for serial port
esp_err_t err = mbc_master_init(MB_PORT_SERIAL_MASTER, &master_handler);
if (master_handler == NULL || err != ESP_OK) {
    ESP_LOGE(TAG, "mb controller initialization fail.");
}
```

This example code to initialize slave port:

```
void* slave_handler = NULL; // Pointer to allocate interface structure
// Initialization of Modbus slave for TCP
esp_err_t err = mbc_slave_init_tcp(&slave_handler);
if (slave_handler == NULL || err != ESP_OK) {
    // Error handling is performed here
    ESP_LOGE(TAG, "mb controller initialization fail.");
}
```

Modbus Master API Overview

The following overview describes how to setup Modbus master communication. The overview reflects a typical programming workflow and is broken down into the sections provided below:

1. *Modbus Port Initialization* - Initialization of Modbus controller interface for the selected port.
2. *Configuring Master Data Access* - Configure data descriptors to access slave parameters.
3. *Master Communication Options* - Allows to setup communication options for selected port.
4. *Master Communication* - Start stack and sending / receiving data.
5. *Modbus Master Teardown* - Destroy Modbus controller and its resources.

Configuring Master Data Access The architectural approach of ESP_Modbus includes one level above standard Modbus IO driver. The additional layer is called Modbus controller and its goal is to add an abstraction such as CID - characteristic identifier. The CID is linked to a corresponding Modbus registers through the table called Data Dictionary and represents device physical parameter (such as temperature, humidity, etc.) in specific Modbus slave device. This approach allows the upper layer (e.g., MESH or MQTT) to be isolated from Modbus specifics thus simplify Modbus integration with other protocols/networks.

The Data Dictionary is the list in the Modbus master which shall be defined by user to link each CID to its corresponding Modbus registers representation using Register Mapping table of the Modbus slave being used. Each element in this data dictionary is of type *mb_parameter_descriptor_t* and represents the description of one physical characteristic:

Table 8: Table 1 Modbus master Data Dictionary description

Field	Description	Detailed information
`cid`	Characteristic ID	The identifier of characteristic (must be unique).
`param_key`	Characteristic Name	String description of the characteristic.
`param_unit`	Characteristic Units	Physical Units of the characteristic.
`mb_slave_addr`	Modbus Slave Address	The short address of the device with correspond parameter UID.
`mb_param_type`	Modbus Register Type	Type of Modbus register area. *MB_PARAM_INPUT*, *MB_PARAM_HOLDING*, *MB_PARAM_COIL*, *MB_PARAM_DISCRETE* - represents Input , Holding, Coil and Discrete input register area accordingly;
`mb_reg_start`	Modbus Register Start	Relative register address of the characteristic in the register area.
`mb_size`	Modbus Register Size	Length of characteristic in registers.
`param_offset`	Instance Offset	Offset to instance of the characteristic in bytes. It is used to calculate the absolute address to the characteristic in the storage structure. It is optional field and can be set to zero if the parameter is not used in the application.
`param_type`	Data Type	Specifies type of the characteristic. *PARAM_TYPE_U8*, *PARAM_TYPE_U16*, *PARAM_TYPE_U32* - Unsigned integer 8/16/32 bit type; *PARAM_TYPE_FLOAT* - IEEE754 floating point format; *PARAM_TYPE_ASCII* - ASCII string or binary data;
`param_size`	Data Size	The storage size of the characteristic (bytes).
`param_opts`	Parameter Options	Limits, options of characteristic used during processing of alarm in user application (optional)
`access`	Parameter access type	Can be used in user application to define the behavior of the characteristic during processing of data in user application; *PAR_PERMS_READ_WRITE_TRIGGER*, *PAR_PERMS_READ*, *PAR_PERMS_READ_WRITE_TRIGGER*;

Note: The `cid` and `param_key` have to be unique. Please use the prefix to the parameter key if you have several similar parameters in your register map table.

Table 9: Table 2 Example Register mapping table of Modbus slave

CID	Register	Length	Range	Type	Units	Description
0	30000	4	MAX_UINT32	U32	Not defined	Serial number of device (4 bytes) read-only
1	30002	2	MAX_UINT16	U16	Not defined	Software version (4 bytes) read-only
2	40000	4	-20..40	FLOAT	DegC	Room temperature in DegC. Writing a temperature value to this register for single point calibration.

```
// Enumeration of modbus slave addresses accessed by master device
enum {
    MB_DEVICE_ADDR1 = 1,
    MB_DEVICE_ADDR2,
    MB_SLAVE_COUNT
};

// Enumeration of all supported CIDs for device
enum {
    CID_SER_NUM1 = 0,
    CID_SW_VER1,
    CID_TEMP_DATA_1,
    CID_SER_NUM2,
    CID_SW_VER2,
    CID_TEMP_DATA_2
};

// Example Data Dictionary for Modbus parameters in 2 slaves in the segment
mb_parameter_descriptor_t device_parameters[] = {
    // CID, Name, Units, Modbus addr, register type, Modbus Reg Start Addr, Modbus␣
↪Reg read length,
    // Instance offset (NA), Instance type, Instance length (bytes), Options (NA),␣
↪Permissions
    { CID_SER_NUM1, STR("Serial_number_1"), STR("--"), MB_DEVICE_ADDR1, MB_PARAM_
↪INPUT, 0, 2,
                    0, PARAM_TYPE_U32, 4, OPTS( 0,0,0 ), PAR_PERMS_READ_WRITE_
↪TRIGGER },
    { CID_SW_VER1, STR("Software_version_1"), STR("--"), MB_DEVICE_ADDR1, MB_PARAM_
↪INPUT, 2, 1,
                    0, PARAM_TYPE_U16, 2, OPTS( 0,0,0 ), PAR_PERMS_READ_WRITE_
↪TRIGGER },
    { CID_TEMP_DATA_1, STR("Temperature_1"), STR("C"), MB_DEVICE_ADDR1, MB_PARAM_
↪HOLDING, 0, 2,
                    0, PARAM_TYPE_FLOAT, 4, OPTS( 16, 30, 1 ), PAR_PERMS_READ_
↪WRITE_TRIGGER },
    { CID_SER_NUM2, STR("Serial_number_2"), STR("--"), MB_DEVICE_ADDR2, MB_PARAM_
↪INPUT, 0, 2,
                    0, PARAM_TYPE_U32, 4, OPTS( 0,0,0 ), PAR_PERMS_READ_WRITE_
↪TRIGGER },
    { CID_SW_VER2, STR("Software_version_2"), STR("--"), MB_DEVICE_ADDR2, MB_PARAM_
↪INPUT, 2, 1,
                    0, PARAM_TYPE_U16, 2, OPTS( 0,0,0 ), PAR_PERMS_READ_WRITE_
↪TRIGGER },
    { CID_TEMP_DATA_2, STR("Temperature_2"), STR("C"), MB_DEVICE_ADDR2, MB_PARAM_
↪HOLDING, 0, 2,
                    0, PARAM_TYPE_FLOAT, 4, OPTS( 20, 30, 1 ), PAR_PERMS_READ_
↪WRITE_TRIGGER },
```

(continues on next page)

(continued from previous page)

```
};
// Calculate number of parameters in the table
uint16_t num_device_parameters = (sizeof(device_parameters) / sizeof(device_
↪parameters[0]));
```

During initialization of the Modbus stack, a pointer to the Data Dictionary (called descriptor) must be provided as the parameter of the function below.

mbc_master_set_descriptor(): Initialization of master descriptor.

```
ESP_ERROR_CHECK(mbc_master_set_descriptor(&device_parameters[0], num_device_
↪parameters));
```

The Data Dictionary can be initialized from SD card, MQTT or other source before start of stack. Once the initialization and setup is done, the Modbus controller allows the reading of complex parameters from any slave included in descriptor table using its CID.

Master Communication Options Calling the setup function allows for specific communication options to be defined for port.

mbc_master_setup()

The communication structure provided as a parameter is different for serial and TCP communication mode.

Example setup for serial port:

```
mb_communication_info_t comm_info = {
    .port = MB_PORT_NUM,         // Serial port number
    .mode = MB_MODE_RTU,         // Modbus mode of communication (MB_MODE_RTU or MB_
↪MODE_ASCII)
    .baudrate = 9600,            // Modbus communication baud rate
    .parity = MB_PARITY_NONE     // parity option for serial port
};

ESP_ERROR_CHECK(mbc_master_setup((void*)&comm_info));
```

Modbus master TCP port requires additional definition of IP address table where number of addresses should be equal to number of unique slave addresses in master Modbus Data Dictionary:

The order of IP address string corresponds to short slave address in the Data Dictionary.

```
#define MB_SLAVE_COUNT 2 // Number of slaves in the segment being accessed (as␣
↪defined in Data Dictionary)

char* slave_ip_address_table[MB_SLAVE_COUNT] = {
    "192.168.1.2",      // Address corresponds to UID1 and set to predefined value␣
↪by user
    "192.168.1.3",      // corresponds to UID2 in the segment
    NULL                // end of table
};

mb_communication_info_t comm_info = {
    .ip_port = MB_TCP_PORT,                     // Modbus TCP port number (default␣
↪= 502)
    .ip_addr_type = MB_IPV4,                    // version of IP protocol
    .ip_mode = MB_MODE_TCP,                     // Port communication mode
    .ip_addr = (void*)slave_ip_address_table,   // assign table of IP addresses
    .ip_netif_ptr = esp_netif_ptr               // esp_netif_ptr pointer to the␣
↪corresponding network interface
};

ESP_ERROR_CHECK(mbc_master_setup((void*)&comm_info));
```

Note: Refer to *esp_netif component* for more information about network interface initialization.

The slave IP addresses in the table can be assigned automatically using mDNS service as described in the example. Refer to protocols/modbus/tcp/mb_tcp_master for more information.

Note: RS485 communication requires call to UART specific APIs to setup communication mode and pins. Refer to *Running UART Communication* section of UART documentation.

Master Communication The starting of the Modbus controller is the final step in enabling communication. This is performed using function below:

mbc_master_start()

```
esp_err_t err = mbc_master_start();
if (err != ESP_OK) {
    ESP_LOGE(TAG, "mb controller start fail, err=%x.", err);
}
```

The list of functions below are used by the Modbus master stack from a user's application:

mbc_master_send_request(): This function executes a blocking Modbus request. The master sends a data request (as defined in parameter request structure *mb_param_request_t*) and then blocks until a response from corresponding slave and returns the status of command execution. This function provides a standard way for read/write access to Modbus devices in the network.

mbc_master_get_cid_info(): The function gets information about each characteristic supported in the data dictionary and returns the characteristic's description in the form of the *mb_parameter_descriptor_t* structure. Each characteristic is accessed using its CID.

mbc_master_get_parameter(): The function reads the data of a characteristic defined in the parameters of a Modbus slave device. The additional data for request is taken from parameter description table.

Example:

```
const mb_parameter_descriptor_t* param_descriptor = NULL;
uint8_t temp_data[4] = {0}; // temporary buffer to hold maximum CID size
uint8_t type = 0;
....

// Get the information for characteristic cid from data dictionary
esp_err_t err = mbc_master_get_cid_info(cid, &param_descriptor);
if ((err != ESP_ERR_NOT_FOUND) && (param_descriptor != NULL)) {
    err = mbc_master_get_parameter(param_descriptor->cid, (char*)param_descriptor->
↪param_key, (uint8_t*)temp_data, &type);
    if (err == ESP_OK) {
        ESP_LOGI(TAG, "Characteristic #%d %s (%s) value = (0x%08x) read successful.
↪",
                        param_descriptor->cid,
                        (char*)param_descriptor->param_key,
                        (char*)param_descriptor->param_units,
                        *(uint32_t*)temp_data);
    } else {
        ESP_LOGE(TAG, "Characteristic #%d (%s) read fail, err = 0x%x (%s).",
                       param_descriptor->cid,
                       (char*)param_descriptor->param_key,
                       (int)err,
                       (char*)esp_err_to_name(err));
    }
} else {
```

(continues on next page)

(continued from previous page)

```
    ESP_LOGE(TAG, "Could not get information for characteristic %d.", cid);
}
```

mbc_master_set_parameter()

The function writes characteristic' s value defined as a name and cid parameter in corresponded slave device. The additional data for parameter request is taken from master parameter description table.

```
uint8_t type = 0; // Type of parameter
uint8_t temp_data[4] = {0}; // temporary buffer

esp_err_t err = mbc_master_set_parameter(CID_TEMP_DATA_2, "Temperature_2", (uint8_
↪t*)temp_data, &type);
if (err == ESP_OK) {
    ESP_LOGI(TAG, "Set parameter data successfully.");
} else {
    ESP_LOGE(TAG, "Set data fail, err = 0x%x (%s).", (int)err, (char*)esp_err_to_
↪name(err));
}
```

Modbus Master Teardown This function stops Modbus communication stack and destroys controller interface and free all used active objects.

mbc_master_destroy()

```
ESP_ERROR_CHECK(mbc_master_destroy());
```

Modbus Slave API Overview

The sections below represent typical programming workflow for the slave API which should be called in following order:

1. *Modbus Port Initialization* - Initialization of Modbus controller interface for the selected port.
2. *Configuring Slave Data Access* - Configure data descriptors to access slave parameters.
3. *Slave Communication Options* - Allows to setup communication options for selected port.
4. *Slave Communication* - Start stack and sending / receiving data. Filter events when master accesses the register areas.
5. *Modbus Slave Teardown* - Destroy Modbus controller and its resources.

Configuring Slave Data Access The following functions must be called when the Modbus controller slave port is already initialized. Refer to *Modbus Port Initialization*.

The slave stack requires the user to define structures (memory storage areas) that store the Modbus parameters accessed by stack. These structures should be prepared by the user and be assigned to the Modbus controller interface using *mbc_slave_set_descriptor()* API call before the start of communication. The slave task can call the *mbc_slave_check_event()* function which will block until the Modbus master access the slave. The slave task can then get information about the data being accessed.

Note: One slave can define several area descriptors per each type of Modbus register area with different start_offset.

Register area is defined by using the *mb_register_area_descriptor_t* structure.

Table 10: Table 3 Modbus register area descriptor

Field	Description
start_offset	Zero-based register relative offset for defined register area. Example: register address = 40002 (4x register area - Function 3 - holding register), start_offset = 2
type	Type of the Modbus register area. Refer to *mb_param_type_t* for more information.
address	A pointer to the memory area which is used to store the register data for this area descriptor.
size	The size of the memory area in bytes which is used to store register data.

mbc_slave_set_descriptor()

The function initializes Modbus communication descriptors for each type of Modbus register area (Holding Registers, Input Registers, Coils (single bit output), Discrete Inputs). Once areas are initialized and the *mbc_slave_start()* API is called the Modbus stack can access the data in user data structures by request from master.

```
#define MB_REG_INPUT_START_AREA0     (0)
#define MB_REG_HOLDING_START_AREA0   (0)
#define MB_REG_HOLD_CNT              (100)
#define MB_REG_INPUT_CNT             (100)

mb_register_area_descriptor_t reg_area; // Modbus register area descriptor␣
↪structure
unit16_t holding_reg_area[MB_REG_HOLD_CNT] = {0}; // storage area for holding␣
↪registers
unit16_t input_reg_area[MB_REG_INPUT_CNT] = {0}; // storage area for input␣
↪registers

reg_area.type = MB_PARAM_HOLDING;                                    // Set type of␣
↪register area
reg_area.start_offset = MB_REG_HOLDING_START_AREA0;                  // Offset of␣
↪register area in Modbus protocol
reg_area.address = (void*)&holding_reg_area[0];                      // Set pointer to␣
↪storage instance
reg_area.size = sizeof(holding_reg_area) << 1;                       // Set the size of␣
↪register storage area in bytes
ESP_ERROR_CHECK(mbc_slave_set_descriptor(reg_area));

reg_area.type = MB_PARAM_INPUT;
reg_area.start_offset = MB_REG_INPUT_START_AREA0;
reg_area.address = (void*)&input_reg_area[0];
reg_area.size = sizeof(input_reg_area) << 1;
ESP_ERROR_CHECK(mbc_slave_set_descriptor(reg_area));
```

At least one area descriptor per each Modbus register type must be set in order to provide register access to its area. If the master tries to access an undefined area, the stack will generate a Modbus exception.

Direct access to register area from user application must be protected by critical section:

```
portENTER_CRITICAL(&param_lock);
holding_reg_area[2] += 10;
portEXIT_CRITICAL(&param_lock);
```

Slave Communication Options The function initializes the Modbus controller interface and its active context (tasks, RTOS objects and other resources).

mbc_slave_setup()

The function is used to setup communication parameters of the Modbus stack.

Example initialization of Modbus TCP communication:

```
esp_netif_init();
...

mb_communication_info_t comm_info = {
    .ip_port = MB_TCP_PORT,                     // Modbus TCP port number (default
↪= 502)
    .ip_addr_type = MB_IPV4,                    // version of IP protocol
    .ip_mode = MB_MODE_TCP,                     // Port communication mode
    .ip_addr = NULL,                            // This field keeps the client IP
↪address to bind, NULL - bind to any client
    .ip_netif_ptr = esp_netif_ptr               // esp_netif_ptr - pointer to the
↪corresponding network interface
};

// Setup communication parameters and start stack
ESP_ERROR_CHECK(mbc_slave_setup((void*)&comm_info));
```

Example initialization of Modbus serial communication:

```
#define MB_SLAVE_DEV_SPEED 9600
#define MB_SLAVE_ADDR 1
#define MB_SLAVE_PORT_NUM 2
...

// Setup communication parameters and start stack
mb_communication_info_t comm_info = {
    .mode = MB_MODE_RTU,                    // Communication type
    .slave_addr = MB_SLAVE_ADDR,            // Short address of the slave
    .port = MB_SLAVE_PORT_NUM,              // UART physical port number
    .baudrate = MB_SLAVE_DEV_SPEED,         // Baud rate for communication
    .parity = MB_PARITY_NONE                // Parity option
};

ESP_ERROR_CHECK(mbc_slave_setup((void*)&comm_info));
```

Slave Communication The function below is used to start Modbus controller interface and allows communication.

mbc_slave_start()

```
ESP_ERROR_CHECK(mbc_slave_start());
```

mbc_slave_check_event()

The blocking call to function waits for a event specified (represented as an event mask parameter). Once the master accesses the parameter and the event mask matches the parameter type, the application task will be unblocked and function will return the corresponding event *mb_event_group_t* which describes the type of register access being done.

mbc_slave_get_param_info()

The function gets information about accessed parameters from the Modbus controller event queue. The KConfig *CONFIG_FMB_CONTROLLER_NOTIFY_QUEUE_SIZE* key can be used to configure the notification queue size. The timeout parameter allows a timeout to be specified when waiting for a notification. The *mb_param_info_t* structure contains information about accessed parameter.

Table 11: Table 4 Description of the register info structure: `mb_param_info_t`

Field	Description
`time_stamp`	the time stamp of the event when defined parameter is accessed
`mb_offset`	start Modbus register accessed by master
`type`	type of the Modbus register area being accessed (See the *`mb_event_group_t`* for more information)
`address`	memory address that corresponds to accessed register in defined area descriptor
`size`	number of registers being accessed by master

Example to get event when holding or input registers accessed in the slave:

```
#define MB_READ_MASK                (MB_EVENT_INPUT_REG_RD | MB_EVENT_HOLDING_REG_RD)
#define MB_WRITE_MASK               (MB_EVENT_HOLDING_REG_WR)
#define MB_READ_WRITE_MASK          (MB_READ_MASK | MB_WRITE_MASK)
#define MB_PAR_INFO_GET_TOUT        (10 / portTICK_RATE_MS)
....

// The function blocks while waiting for register access
mb_event_group_t event = mbc_slave_check_event(MB_READ_WRITE_MASK);

// Get information about data accessed from master
ESP_ERROR_CHECK(mbc_slave_get_param_info(&reg_info, MB_PAR_INFO_GET_TOUT));
const char* rw_str = (event & MB_READ_MASK) ? "READ" : "WRITE";

// Filter events and process them accordingly
if (event & (MB_EVENT_HOLDING_REG_WR | MB_EVENT_HOLDING_REG_RD)) {
    ESP_LOGI(TAG, "HOLDING %s (%u us), ADDR:%u, TYPE:%u, INST_ADDR:0x%.4x, SIZE:%u
↪",
                rw_str,
                (uint32_t)reg_info.time_stamp,
                (uint32_t)reg_info.mb_offset,
                (uint32_t)reg_info.type,
                (uint32_t)reg_info.address,
                (uint32_t)reg_info.size);
} else if (event & (MB_EVENT_INPUT_REG_RD)) {
    ESP_LOGI(TAG, "INPUT %s (%u us), ADDR:%u, TYPE:%u, INST_ADDR:0x%.4x, SIZE:%u",
                rw_str,
                (uint32_t)reg_info.time_stamp,
                (uint32_t)reg_info.mb_offset,
                (uint32_t)reg_info.type,
                (uint32_t)reg_info.address,
                (uint32_t)reg_info.size);
}
```

Modbus Slave Teardown This function stops the Modbus communication stack, destroys the controller interface, and frees all used active objects allocated for the slave.

`mbc_slave_destroy()`

```
ESP_ERROR_CHECK(mbc_slave_destroy());
```

Possible Communication Issues And Solutions

If the examples do not work as expected and slave and master boards are not able to communicate correctly, it is possible to find the reason for errors. The most important errors are described in master example output and formatted as below:

```
E (1692332) MB_CONTROLLER_MASTER: mbc_master_get_parameter(111): SERIAL master get␣
↪parameter failure error=(0x107) (ESP_ERR_TIMEOUT).
```

Table 12: Table 5 Modbus error codes and troubleshooting

Error	Description	Possible solution
0x106	ESP_ERR_NOT_SUPPORTED - Invalid register request - slave returned an exception because the requested register is not supported.	Refer to slave register map. Check the master data dictionary for correctness.
0x107	ESP_ERR_TIMEOUT - Slave response timeout - Modbus slave did not send response during configured slave response timeout.	Measure and increase the maximum slave response timeout *idf.py menuconfig*, option *CONFIG_FMB_MASTER_TIMEOUT_MS_RESPOND*. Check physical connection or network configuration and make sure that the slave response can reach the master side. If the application has some high performance tasks with higher priority than *CONFIG_FMB_PORT_TASK_PRIO* it is recommended to place Modbus tasks on the other core using an option *CONFIG_FMB_PORT_TASK_AFFINITY*. Configure the Modbus task' s priority *CONFIG_FMB_PORT_TASK_PRIO* to ensure that the task gets sufficient processing time to handle Modbus stack events.
0x108	ESP_ERR_INVALID_RESPONSE - Received unsupported response from slave or frame check failure. Master can not execute command handler because the command is either not supported or is incorrect.	Check the physical connection then refer to register map of your slave to configure the master data dictionary properly.
0x103	ESP_ERR_INVALID_STATE - Critical failure or FSM sequence failure or master FSM is busy processing previous request.	Make sure your physical connection is working properly. Increase task stack size and check Modbus initialization sequence.

Application Example

The examples below use the FreeModbus library port for serial TCP slave and master implementations accordingly. The selection of stack is performed through KConfig menu option "Enable Modbus stack support ···" for appropriate communication mode and related configuration keys.

- protocols/modbus/serial/mb_slave
- protocols/modbus/serial/mb_master
- protocols/modbus/tcp/mb_tcp_slave
- protocols/modbus/tcp/mb_tcp_master

Please refer to the specific example README.md for details.

Protocol References

- `https://modbus.org/specs.php`: Modbus Organization with protocol specifications.

API Reference

Header File

- components/freemodbus/common/include/esp_modbus_common.h

Unions

union **mb_communication_info_t**

#include <esp_modbus_common.h> Device communication structure to setup Modbus controller.

Public Members

mb_mode_type_t **mode**

Modbus communication mode

uint8_t **slave_addr**

Modbus slave address field (dummy for master)

uart_port_t **port**

Modbus communication port (UART) number

uint32_t **baudrate**

Modbus baudrate

uart_parity_t **parity**

Modbus UART parity settings

uint16_t **dummy_port**

Dummy field, unused

struct *mb_communication_info_t*::[anonymous] **[anonymous]**

mb_mode_type_t **ip_mode**

Modbus communication mode

uint16_t **ip_port**

Modbus port

mb_tcp_addr_type_t **ip_addr_type**

Modbus address type

void ***ip_addr**

Modbus address table for connection

void ***ip_netif_ptr**

Modbus network interface

struct *mb_communication_info_t*::[anonymous] **[anonymous]**

Macros

MB_RETURN_ON_FALSE(a, err_code, tag, format, ...)

MB_CONTROLLER_STACK_SIZE

MB_CONTROLLER_PRIORITY

MB_DEVICE_ADDRESS

MB_DEVICE_SPEED

MB_UART_PORT

MB_PAR_INFO_TOUT

MB_PARITY_NONE

_XFER_4_RD(dst, src)

_XFER_2_RD(dst, src)

_XFER_4_WR(dst, src)

_XFER_2_WR(dst, src)

Type Definitions

typedef *esp_err_t* (***iface_init**)(void**)

common interface method typesInterface method init

typedef *esp_err_t* (***iface_destroy**)(void)

Interface method destroy

typedef *esp_err_t* (***iface_setup**)(void*)

Interface method setup

typedef *esp_err_t* (***iface_start**)(void)

Interface method start

Enumerations

enum **mb_port_type_t**

Types of actual Modbus implementation.

Values:

enumerator **MB_PORT_SERIAL_MASTER**

Modbus port type serial master.

enumerator **MB_PORT_SERIAL_SLAVE**

Modbus port type serial slave.

enumerator **MB_PORT_TCP_MASTER**

Modbus port type TCP master.

enumerator **MB_PORT_TCP_SLAVE**

Modbus port type TCP slave.

enumerator **MB_PORT_COUNT**

Modbus port count.

enumerator **MB_PORT_INACTIVE**

enum **mb_event_group_t**

Event group for parameters notification.

Values:

enumerator **MB_EVENT_NO_EVENTS**

enumerator **MB_EVENT_HOLDING_REG_WR**

Modbus Event Write Holding registers.

enumerator **MB_EVENT_HOLDING_REG_RD**

Modbus Event Read Holding registers.

enumerator **MB_EVENT_INPUT_REG_RD**

Modbus Event Read Input registers.

enumerator **MB_EVENT_COILS_WR**

Modbus Event Write Coils.

enumerator **MB_EVENT_COILS_RD**

Modbus Event Read Coils.

enumerator **MB_EVENT_DISCRETE_RD**

Modbus Event Read Discrete bits.

enumerator **MB_EVENT_STACK_STARTED**

Modbus Event Stack started

enum **mb_param_type_t**

Type of Modbus parameter.

Values:

enumerator **MB_PARAM_HOLDING**

Modbus Holding register.

enumerator **MB_PARAM_INPUT**

Modbus Input register.

enumerator **MB_PARAM_COIL**

Modbus Coils.

enumerator **MB_PARAM_DISCRETE**

Modbus Discrete bits.

enumerator **MB_PARAM_COUNT**

enumerator **MB_PARAM_UNKNOWN**

enum **mb_mode_type_t**

Modbus serial transmission modes (RTU/ASCII).

Values:

enumerator **MB_MODE_RTU**

RTU transmission mode.

enumerator **MB_MODE_ASCII**

ASCII transmission mode.

enumerator **MB_MODE_TCP**

TCP communication mode.

enumerator **MB_MODE_UDP**

UDP communication mode.

enum **mb_tcp_addr_type_t**

Modbus TCP type of address.

Values:

enumerator **MB_IPV4**

TCP IPV4 addressing

enumerator **MB_IPV6**

TCP IPV6 addressing

Header File

- components/freemodbus/common/include/esp_modbus_master.h

Functions

esp_err_t **mbc_master_init_tcp**(void **handler)

Initialize Modbus controller and stack for TCP port.

Parameters **handler** – **[out]** handler(pointer) to master data structure

Returns

- ESP_OK Success
- ESP_ERR_NO_MEM Parameter error
- ESP_ERR_NOT_SUPPORTED Port type not supported
- ESP_ERR_INVALID_STATE Initialization failure

esp_err_t **mbc_master_init** (*mb_port_type_t* port_type, void **handler)

Initialize Modbus Master controller and stack for Serial port.

Parameters
- **handler** –**[out]** handler(pointer) to master data structure
- **port_type** –**[in]** type of stack

Returns
- ESP_OK Success
- ESP_ERR_NO_MEM Parameter error
- ESP_ERR_NOT_SUPPORTED Port type not supported
- ESP_ERR_INVALID_STATE Initialization failure

void **mbc_master_init_iface** (void *handler)

Initialize Modbus Master controller interface handle.

Parameters **handler** –**[in]** - pointer to master data structure

esp_err_t **mbc_master_destroy** (void)

Destroy Modbus controller and stack.

Returns
- ESP_OK Success
- ESP_ERR_INVALID_STATE Parameter error

esp_err_t **mbc_master_start** (void)

Start Modbus communication stack.

Returns
- ESP_OK Success
- ESP_ERR_INVALID_ARG Modbus stack start error

esp_err_t **mbc_master_setup** (void *comm_info)

Set Modbus communication parameters for the controller.

Parameters **comm_info** –Communication parameters structure.

Returns
- ESP_OK Success
- ESP_ERR_INVALID_ARG Incorrect parameter data

esp_err_t **mbc_master_set_descriptor** (const *mb_parameter_descriptor_t* *descriptor, const uint16_t num_elements)

Assign parameter description table for Modbus controller interface.

Parameters
- **descriptor** –**[in]** pointer to parameter description table
- **num_elements** –number of elements in the table

Returns
- esp_err_t ESP_OK - set descriptor successfully
- esp_err_t ESP_ERR_INVALID_ARG - invalid argument in function call

esp_err_t **mbc_master_send_request** (*mb_param_request_t* *request, void *data_ptr)

Send data request as defined in parameter request, waits response from slave and returns status of command execution. This function provides standard way for read/write access to Modbus devices in the network.

Parameters
- **request** –**[in]** pointer to request structure of type *mb_param_request_t*
- **data_ptr** –**[in]** pointer to data buffer to send or received data (dependent of command field in request)

Returns
- esp_err_t ESP_OK - request was successful
- esp_err_t ESP_ERR_INVALID_ARG - invalid argument of function
- esp_err_t ESP_ERR_INVALID_RESPONSE - an invalid response from slave
- esp_err_t ESP_ERR_TIMEOUT - operation timeout or no response from slave

- esp_err_t ESP_ERR_NOT_SUPPORTED - the request command is not supported by slave
- esp_err_t ESP_FAIL - slave returned an exception or other failure

esp_err_t **mbc_master_get_cid_info**(uint16_t cid, const *mb_parameter_descriptor_t* **param_info)

Get information about supported characteristic defined as cid. Uses parameter description table to get this information. The function will check if characteristic defined as a cid parameter is supported and returns its description in param_info. Returns ESP_ERR_NOT_FOUND if characteristic is not supported.

Parameters

- **cid** –**[in]** characteristic id
- **param_info** –pointer to pointer of characteristic data.

Returns

- esp_err_t ESP_OK - request was successful and buffer contains the supported characteristic name
- esp_err_t ESP_ERR_INVALID_ARG - invalid argument of function
- esp_err_t ESP_ERR_NOT_FOUND - the characteristic (cid) not found
- esp_err_t ESP_FAIL - unknown error during lookup table processing

esp_err_t **mbc_master_get_parameter**(uint16_t cid, char *name, uint8_t *value, uint8_t *type)

Read parameter from modbus slave device whose name is defined by name and has cid. The additional data for request is taken from parameter description (lookup) table.

Parameters

- **cid** –**[in]** id of the characteristic for parameter
- **name** –**[in]** pointer into string name (key) of parameter (null terminated)
- **value** –**[out]** pointer to data buffer of parameter
- **type** –**[out]** parameter type associated with the name returned from parameter description table.

Returns

- esp_err_t ESP_OK - request was successful and value buffer contains representation of actual parameter data from slave
- esp_err_t ESP_ERR_INVALID_ARG - invalid argument of function or parameter descriptor
- esp_err_t ESP_ERR_INVALID_RESPONSE - an invalid response from slave
- esp_err_t ESP_ERR_INVALID_STATE - invalid state during data processing or allocation failure
- esp_err_t ESP_ERR_TIMEOUT - operation timed out and no response from slave
- esp_err_t ESP_ERR_NOT_SUPPORTED - the request command is not supported by slave
- esp_err_t ESP_ERR_NOT_FOUND - the parameter is not found in the parameter description table
- esp_err_t ESP_FAIL - slave returned an exception or other failure

esp_err_t **mbc_master_set_parameter**(uint16_t cid, char *name, uint8_t *value, uint8_t *type)

Set characteristic’ s value defined as a name and cid parameter. The additional data for cid parameter request is taken from master parameter lookup table.

Parameters

- **cid** –**[in]** id of the characteristic for parameter
- **name** –**[in]** pointer into string name (key) of parameter (null terminated)
- **value** –**[out]** pointer to data buffer of parameter (actual representation of json value field in binary form)
- **type** –**[out]** pointer to parameter type associated with the name returned from parameter lookup table.

Returns

- esp_err_t ESP_OK - request was successful and value was saved in the slave device registers
- esp_err_t ESP_ERR_INVALID_ARG - invalid argument of function or parameter descriptor

- esp_err_t ESP_ERR_INVALID_RESPONSE - an invalid response from slave during processing of parameter
- esp_err_t ESP_ERR_INVALID_STATE - invalid state during data processing or allocation failure
- esp_err_t ESP_ERR_TIMEOUT - operation timed out and no response from slave
- esp_err_t ESP_ERR_NOT_SUPPORTED - the request command is not supported by slave
- esp_err_t ESP_FAIL - slave returned an exception or other failure

Unions

union **mb_parameter_opt_t**

#include <esp_modbus_master.h> Modbus parameter options for description table.

Public Members

int **opt1**

Parameter option1

int **opt2**

Parameter option2

int **opt3**

Parameter option3

struct *mb_parameter_opt_t*::[anonymous] **[anonymous]**

int **min**

Parameter minimum value

int **max**

Parameter maximum value

int **step**

Step of parameter change tracking

struct *mb_parameter_opt_t*::[anonymous] **[anonymous]**

Structures

struct **mb_parameter_descriptor_t**

Characteristics descriptor type is used to describe characteristic and link it with Modbus parameters that reflect its data.

Public Members

uint16_t **cid**

Characteristic cid

const char ***param_key**

The key (name) of the parameter

const char ***param_units**

The physical units of the parameter

uint8_t **mb_slave_addr**

Slave address of device in the Modbus segment

mb_param_type_t **mb_param_type**

Type of modbus parameter

uint16_t **mb_reg_start**

This is the Modbus register address. This is the 0 based value.

uint16_t **mb_size**

Size of mb parameter in registers

uint16_t **param_offset**

Parameter name (OFFSET in the parameter structure)

mb_descr_type_t **param_type**

Float, U8, U16, U32, ASCII, etc.

mb_descr_size_t **param_size**

Number of bytes in the parameter.

mb_parameter_opt_t **param_opts**

Parameter options used to check limits and etc.

mb_param_perms_t **access**

Access permissions based on mode

struct **mb_param_request_t**

Modbus register request type structure.

Public Members

uint8_t **slave_addr**

Modbus slave address

uint8_t **command**

Modbus command to send

uint16_t **reg_start**

Modbus start register

uint16_t **reg_size**

Modbus number of registers

Macros

MB_MASTER_CHECK(a, err_code, format, ...)

MB_MASTER_ASSERT(con)

Enumerations

enum **mb_descr_type_t**

Modbus descriptor table parameter type defines.

Values:

enumerator **PARAM_TYPE_U8**

Unsigned 8

enumerator **PARAM_TYPE_U16**

Unsigned 16

enumerator **PARAM_TYPE_U32**

Unsigned 32

enumerator **PARAM_TYPE_FLOAT**

Float type

enumerator **PARAM_TYPE_ASCII**

ASCII type

enum **mb_descr_size_t**

Modbus descriptor table parameter size in bytes.

Values:

enumerator **PARAM_SIZE_U8**

Unsigned 8

enumerator **PARAM_SIZE_U16**

Unsigned 16

enumerator **PARAM_SIZE_U32**

Unsigned 32

enumerator **PARAM_SIZE_FLOAT**

Float size

enumerator **PARAM_SIZE_ASCII**

ASCII size

enumerator **PARAM_SIZE_ASCII24**

ASCII24 size

enumerator **PARAM_MAX_SIZE**

enum **mb_param_perms_t**

Permissions for the characteristics.

Values:

enumerator **PAR_PERMS_READ**

the characteristic of the device are readable

enumerator **PAR_PERMS_WRITE**

the characteristic of the device are writable

enumerator **PAR_PERMS_TRIGGER**

the characteristic of the device are triggerable

enumerator **PAR_PERMS_READ_WRITE**

the characteristic of the device are readable & writable

enumerator **PAR_PERMS_READ_TRIGGER**

the characteristic of the device are readable & triggerable

enumerator **PAR_PERMS_WRITE_TRIGGER**

the characteristic of the device are writable & triggerable

enumerator **PAR_PERMS_READ_WRITE_TRIGGER**

the characteristic of the device are readable & writable & triggerable

Header File

- components/freemodbus/common/include/esp_modbus_slave.h

Functions

esp_err_t **mbc_slave_init_tcp**(void **handler)

Initialize Modbus Slave controller and stack for TCP port.

Parameters **handler** –**[out]** handler(pointer) to master data structure

Returns

- ESP_OK Success
- ESP_ERR_NO_MEM Parameter error
- ESP_ERR_NOT_SUPPORTED Port type not supported
- ESP_ERR_INVALID_STATE Initialization failure

esp_err_t **mbc_slave_init**(*mb_port_type_t* port_type, void **handler)

Initialize Modbus Slave controller and stack for Serial port.

Parameters

- **handler** –**[out]** handler(pointer) to master data structure
- **port_type** –**[in]** the type of port

Returns

- ESP_OK Success
- ESP_ERR_NO_MEM Parameter error
- ESP_ERR_NOT_SUPPORTED Port type not supported
- ESP_ERR_INVALID_STATE Initialization failure

void **mbc_slave_init_iface**(void *handler)

Initialize Modbus Slave controller interface handle.

Parameters **handler** –**[in]** - pointer to slave interface data structure

esp_err_t **mbc_slave_destroy**(void)

Destroy Modbus controller and stack.

Returns
- ESP_OK Success
- ESP_ERR_INVALID_STATE Parameter error

esp_err_t **mbc_slave_start**(void)

Start Modbus communication stack.

Returns
- ESP_OK Success
- ESP_ERR_INVALID_ARG Modbus stack start error

esp_err_t **mbc_slave_setup**(void *comm_info)

Set Modbus communication parameters for the controller.

Parameters **comm_info** –Communication parameters structure.
Returns
- ESP_OK Success
- ESP_ERR_INVALID_ARG Incorrect parameter data

mb_event_group_t **mbc_slave_check_event**(*mb_event_group_t* group)

Wait for specific event on parameter change.

Parameters **group** –Group event bit mask to wait for change
Returns
- mb_event_group_t event bits triggered

esp_err_t **mbc_slave_get_param_info**(*mb_param_info_t* *reg_info, uint32_t timeout)

Get parameter information.

Parameters
- **reg_info** –**[out]** parameter info structure
- **timeout** –Timeout in milliseconds to read information from parameter queue

Returns
- ESP_OK Success
- ESP_ERR_TIMEOUT Can not get data from parameter queue or queue overflow

esp_err_t **mbc_slave_set_descriptor**(*mb_register_area_descriptor_t* descr_data)

Set Modbus area descriptor.

Parameters **descr_data** –Modbus registers area descriptor structure
Returns
- ESP_OK: The appropriate descriptor is set
- ESP_ERR_INVALID_ARG: The argument is incorrect

Structures

struct **mb_param_info_t**

Parameter access event information type.

Public Members

uint32_t **time_stamp**

Timestamp of Modbus Event (uS)

uint16_t **mb_offset**

Modbus register offset

mb_event_group_t **type**

Modbus event type

uint8_t ***address**

Modbus data storage address

size_t **size**

Modbus event register size (number of registers)

struct **mb_register_area_descriptor_t**

Parameter storage area descriptor.

Public Members

uint16_t **start_offset**

Modbus start address for area descriptor

mb_param_type_t **type**

Type of storage area descriptor

void ***address**

Instance address for storage area descriptor

size_t **size**

Instance size for area descriptor (bytes)

Macros

MB_SLAVE_CHECK(a, err_code, format, ...)

MB_SLAVE_ASSERT(con)

2.4.12 ESP WebSocket Client

Overview

The ESP WebSocket client is an implementation of WebSocket protocol client for ESP32

Features

- Supports WebSocket over TCP, TLS with mbedtls
- Easy to setup with URI
- Multiple instances (Multiple clients in one application)

Configuration

URI

- Supports `ws`, `wss` schemes
- WebSocket samples:
  - `ws://echo.websocket.org`: WebSocket over TCP, default port 80
  - `wss://echo.websocket.org`: WebSocket over SSL, default port 443

Minimal configurations:

```
const esp_websocket_client_config_t ws_cfg = {
    .uri = "ws://echo.websocket.org",
};
```

The WebSocket client supports the use of both path and query in the URI. Sample:

```
const esp_websocket_client_config_t ws_cfg = {
    .uri = "ws://echo.websocket.org/connectionhandler?id=104",
};
```

If there are any options related to the URI in *esp_websocket_client_config_t*, the option defined by the URI will be overridden. Sample:

```
const esp_websocket_client_config_t ws_cfg = {
    .uri = "ws://echo.websocket.org:123",
    .port = 4567,
};
//WebSocket client will connect to websocket.org using port 4567
```

TLS Configuration:

```
const esp_websocket_client_config_t ws_cfg = {
    .uri = "wss://echo.websocket.org",
    .cert_pem = (const char *)websocket_org_pem_start,
};
```

Note: If you want to verify the server, then you need to provide a certificate in PEM format, and provide to `cert_pem` in `websocket_client_config_t`. If no certficate is provided then the TLS connection will to default not requiring verification.

PEM certificate for this example could be extracted from an openssl *s_client* command connecting to websocket.org. In case a host operating system has *openssl* and *sed* packages installed, one could execute the following command to download and save the root or intermediate root certificate to a file (Note for Windows users: Both Linux like environment or Windows native packages may be used). ` echo "" | openssl s_client -showcerts -connect websocket.org:443 | sed -n "1,/Root/d; /BEGIN/,/END/p" | openssl x509 -outform PEM >websocket_org.pem `

This command will extract the second certificate in the chain and save it as a pem-file.

Subprotocol The subprotocol field in the config struct can be used to request a subprotocol

```
const esp_websocket_client_config_t ws_cfg = {
    .uri = "ws://websocket.org",
    .subprotocol = "soap",
};
```

Note: The client is indifferent to the subprotocol field in the server response and will accept the connection no matter what the server replies.

For more options on *esp_websocket_client_config_t*, please refer to API reference below

Events

- *WEBSOCKET_EVENT_CONNECTED*: The client has successfully established a connection to the server. The client is now ready to send and receive data. Contains no event data.
- *WEBSOCKET_EVENT_DISCONNECTED*: The client has aborted the connection due to the transport layer failing to read data, e.g. because the server is unavailable. Contains no event data.
- *WEBSOCKET_EVENT_DATA*: The client has successfully received and parsed a WebSocket frame. The event data contains a pointer to the payload data, the length of the payload data as well as the opcode of the received frame. A message may be fragmented into multiple events if the length exceeds the buffer size. This event will also be posted for non-payload frames, e.g. pong or connection close frames.
- *WEBSOCKET_EVENT_ERROR*: Not used in the current implementation of the client.

If the client handle is needed in the event handler it can be accessed through the pointer passed to the event handler:

```
esp_websocket_client_handle_t client = (esp_websocket_client_handle_t)handler_args;
```

Limitations and Known Issues

- The client is able to request the use of a subprotocol from the server during the handshake, but does not do any subprotocol related checks on the response from the server.

Application Example

A simple WebSocket example that uses esp_websocket_client to establish a websocket connection and send/receive data with the websocket.org server can be found here: protocols/websocket.

Sending Text Data The WebSocket client supports sending data as a text data frame, which informs the application layer that the payload data is text data encoded as UTF-8. Example:

```
esp_websocket_client_send_text(client, data, len, portMAX_DELAY);
```

API Reference

Header File

- components/esp_websocket_client/include/esp_websocket_client.h

Functions

esp_websocket_client_handle_t **esp_websocket_client_init** (const *esp_websocket_client_config_t* *config)

Start a Websocket session This function must be the first function to call, and it returns a esp_websocket_client_handle_t that you must use as input to other functions in the interface. This call MUST have a corresponding call to esp_websocket_client_destroy when the operation is complete.

Parameters `config` –**[in]** The configuration

Returns

- `esp_websocket_client_handle_t`
- NULL if any errors

esp_err_t **esp_websocket_client_set_uri** (*esp_websocket_client_handle_t* client, const char *uri)

Set URL for client, when performing this behavior, the options in the URL will replace the old ones Must stop the WebSocket client before set URI if the client has been connected.

Parameters
- **client** –**[in]** The client
- **uri** –**[in]** The uri

Returns esp_err_t

esp_err_t **esp_websocket_client_start** (*esp_websocket_client_handle_t* client)

Open the WebSocket connection.

Parameters **client** –**[in]** The client
Returns esp_err_t

esp_err_t **esp_websocket_client_stop** (*esp_websocket_client_handle_t* client)

Stops the WebSocket connection without websocket closing handshake.

This API stops ws client and closes TCP connection directly without sending close frames. It is a good practice to close the connection in a clean way using esp_websocket_client_close().

Notes:

- Cannot be called from the websocket event handler

Parameters **client** –**[in]** The client
Returns esp_err_t

esp_err_t **esp_websocket_client_destroy** (*esp_websocket_client_handle_t* client)

Destroy the WebSocket connection and free all resources. This function must be the last function to call for an session. It is the opposite of the esp_websocket_client_init function and must be called with the same handle as input that a esp_websocket_client_init call returned. This might close all connections this handle has used.

Notes:

- Cannot be called from the websocket event handler

Parameters **client** –**[in]** The client
Returns esp_err_t

int **esp_websocket_client_send** (*esp_websocket_client_handle_t* client, const char *data, int len, TickType_t timeout)

Generic write data to the WebSocket connection; defaults to binary send.

Parameters
- **client** –**[in]** The client
- **data** –**[in]** The data
- **len** –**[in]** The length
- **timeout** –**[in]** Write data timeout in RTOS ticks

Returns
- Number of data was sent
- (-1) if any errors

int **esp_websocket_client_send_bin** (*esp_websocket_client_handle_t* client, const char *data, int len, TickType_t timeout)

Write binary data to the WebSocket connection (data send with WS OPCODE=02, i.e. binary)

Parameters
- **client** –**[in]** The client
- **data** –**[in]** The data
- **len** –**[in]** The length
- **timeout** –**[in]** Write data timeout in RTOS ticks

Returns

- Number of data was sent
- (-1) if any errors

int **esp_websocket_client_send_text**(*esp_websocket_client_handle_t* client, const char *data, int len, TickType_t timeout)

Write textual data to the WebSocket connection (data send with WS OPCODE=01, i.e. text)

Parameters
- **client** –**[in]** The client
- **data** –**[in]** The data
- **len** –**[in]** The length
- **timeout** –**[in]** Write data timeout in RTOS ticks

Returns
- Number of data was sent
- (-1) if any errors

esp_err_t **esp_websocket_client_close**(*esp_websocket_client_handle_t* client, TickType_t timeout)

Close the WebSocket connection in a clean way.

Sequence of clean close initiated by client:

- Client sends CLOSE frame
- Client waits until server echos the CLOSE frame
- Client waits until server closes the connection
- Client is stopped the same way as by the `esp_websocket_client_stop()`
  Notes:
  - Cannot be called from the websocket event handler

Parameters
- **client** –**[in]** The client
- **timeout** –**[in]** Timeout in RTOS ticks for waiting

Returns esp_err_t

esp_err_t **esp_websocket_client_close_with_code**(*esp_websocket_client_handle_t* client, int code, const char *data, int len, TickType_t timeout)

Close the WebSocket connection in a clean way with custom code/data Closing sequence is the same as for esp_websocket_client_close()

Notes:

- Cannot be called from the websocket event handler

Parameters
- **client** –**[in]** The client
- **code** –**[in]** Close status code as defined in RFC6455 section-7.4
- **data** –**[in]** Additional data to closing message
- **len** –**[in]** The length of the additional data
- **timeout** –**[in]** Timeout in RTOS ticks for waiting

Returns esp_err_t

bool **esp_websocket_client_is_connected**(*esp_websocket_client_handle_t* client)

Check the WebSocket client connection state.

Parameters **client** –**[in]** The client handle

Returns
- true
- false

esp_err_t **esp_websocket_register_events**(*esp_websocket_client_handle_t* client, *esp_websocket_event_id_t* event, *esp_event_handler_t* event_handler, void *event_handler_arg)

Register the Websocket Events.

Parameters
- **client** –The client handle
- **event** –The event id
- **event_handler** –The callback function
- **event_handler_arg** –User context

Returns esp_err_t

Structures

struct **esp_websocket_event_data_t**

Websocket event data.

Public Members

const char ***data_ptr**

Data pointer

int **data_len**

Data length

uint8_t **op_code**

Received opcode

esp_websocket_client_handle_t **client**

esp_websocket_client_handle_t context

void ***user_context**

user_data context, from *esp_websocket_client_config_t* user_data

int **payload_len**

Total payload length, payloads exceeding buffer will be posted through multiple events

int **payload_offset**

Actual offset for the data associated with this event

struct **esp_websocket_client_config_t**

Websocket client setup configuration.

Public Members

const char ***uri**

Websocket URI, the information on the URI can be overrides the other fields below, if any

const char ***host**

Domain or IP as string

int **port**

Port to connect, default depend on esp_websocket_transport_t (80 or 443)

const char ***username**

Using for Http authentication - Not supported for now

const char ***password**

Using for Http authentication - Not supported for now

const char ***path**

HTTP Path, if not set, default is `/`

bool **disable_auto_reconnect**

Disable the automatic reconnect function when disconnected

void ***user_context**

HTTP user data context

int **task_prio**

Websocket task priority

int **task_stack**

Websocket task stack

int **buffer_size**

Websocket buffer size

const char ***cert_pem**

Pointer to certificate data in PEM or DER format for server verify (with SSL), default is NULL, not required to verify the server. PEM-format must have a terminating NULL-character. DER-format requires the length to be passed in cert_len.

size_t **cert_len**

Length of the buffer pointed to by cert_pem. May be 0 for null-terminated pem

const char ***client_cert**

Pointer to certificate data in PEM or DER format for SSL mutual authentication, default is NULL, not required if mutual authentication is not needed. If it is not NULL, also `client_key` has to be provided. PEM-format must have a terminating NULL-character. DER-format requires the length to be passed in client_cert_len.

size_t **client_cert_len**

Length of the buffer pointed to by client_cert. May be 0 for null-terminated pem

const char ***client_key**

Pointer to private key data in PEM or DER format for SSL mutual authentication, default is NULL, not required if mutual authentication is not needed. If it is not NULL, also `client_cert` has to be provided. PEM-format must have a terminating NULL-character. DER-format requires the length to be passed in client_key_len

size_t **client_key_len**

Length of the buffer pointed to by client_key_pem. May be 0 for null-terminated pem

esp_websocket_transport_t **transport**

Websocket transport type, see `esp_websocket_transport_t

const char ***subprotocol**

Websocket subprotocol

const char ***user_agent**

Websocket user-agent

const char ***headers**

Websocket additional headers

int **pingpong_timeout_sec**

Period before connection is aborted due to no PONGs received

bool **disable_pingpong_discon**

Disable auto-disconnect due to no PONG received within pingpong_timeout_sec

bool **use_global_ca_store**

Use a global ca_store for all the connections in which this bool is set.

bool **skip_cert_common_name_check**

Skip any validation of server certificate CN field

bool **keep_alive_enable**

Enable keep-alive timeout

int **keep_alive_idle**

Keep-alive idle time. Default is 5 (second)

int **keep_alive_interval**

Keep-alive interval time. Default is 5 (second)

int **keep_alive_count**

Keep-alive packet retry send count. Default is 3 counts

size_t **ping_interval_sec**

Websocket ping interval, defaults to 10 seconds if not set

struct ifreq ***if_name**

The name of interface for data to go through. Use the default interface without setting

Type Definitions

typedef struct esp_websocket_client ***esp_websocket_client_handle_t**

Enumerations

enum **esp_websocket_event_id_t**

Websocket Client events id.

Values:

enumerator **WEBSOCKET_EVENT_ANY**

enumerator **WEBSOCKET_EVENT_ERROR**

This event occurs when there are any errors during execution

enumerator **WEBSOCKET_EVENT_CONNECTED**

Once the Websocket has been connected to the server, no data exchange has been performed

enumerator **WEBSOCKET_EVENT_DISCONNECTED**

The connection has been disconnected

enumerator **WEBSOCKET_EVENT_DATA**

When receiving data from the server, possibly multiple portions of the packet

enumerator **WEBSOCKET_EVENT_CLOSED**

The connection has been closed cleanly

enumerator **WEBSOCKET_EVENT_MAX**

enum **esp_websocket_transport_t**

Websocket Client transport.

Values:

enumerator **WEBSOCKET_TRANSPORT_UNKNOWN**

Transport unknown

enumerator **WEBSOCKET_TRANSPORT_OVER_TCP**

Transport over tcp

enumerator **WEBSOCKET_TRANSPORT_OVER_SSL**

Transport over ssl

2.4.13 ESP Serial Slave Link

Overview

Espressif provides several chips that can work as slaves. These slave devices rely on some common buses, and have their own communication protocols over those buses. The *esp_serial_slave_link* component is designed for the master to communicate with ESP slave devices through those protocols over the bus drivers.

After an *esp_serial_slave_link* device is initialized properly, the application can use it to communicate with the ESP slave devices conveniently.

Espressif Device protocols

For more details about Espressif device protocols, see the following documents.

Communication with ESP SDIO Slave This document describes the process of initialization of an ESP SDIO Slave device and then provides details on the ESP SDIO Slave protocol - a non-standard protocol that allows an SDIO Host to communicate with an ESP SDIO slave.

The ESP SDIO Slave protocol was created to implement the communication between SDIO host and slave, because the SDIO specification only shows how to access the custom region of a card (by sending CMD52 and CMD53 to Functions 1-7) without any details regarding the underlying hardware implementation.

SDIO Slave Capabilities of Espressif chips The services provided by the SDIO Slave peripheral of the ESP32 chip are listed in the table below:

Services	ESP32
SDIO slave	Y
Tohost intr	8
Frhost intr	8
TX DMA	Y
RX DMA	Y
Shared registers	56*

- * Not including the interrupt registers

ESP SDIO Slave Initialization The host should initialize the ESP32 SDIO slave according to the standard SDIO initialization process (Section 3.1.2 of SDIO Simplified Specification). In this specification as well as below, the SDIO slave is called an (SD)IO card. Here is a brief example of an ESP SDIO Slave initialization process:

1. **SDIO reset** CMD52 (Write 0x6=0x8)
2. **SD reset** CMD0
3. **Check whether IO card (optional)** CMD8
4. **Send SDIO op cond and wait for card ready** CMD5 arg = 0x00000000
   CMD5 arg = 0x00ff8000 (according to the response above, poll until ready)
   Example: Arg of R4 after first CMD5 (arg=0x00000000) is 0xXXFFFF00.
   Keep sending CMD5 with arg=0x00FFFF00 until the R4 shows card ready (arg bit 31=1).
5. **Set address** CMD3
6. **Select card** CMD7 (arg address according to CMD3 response)
   Example: Arg of R6 after CMD3 is 0x0001xxxx.
   Arg of CMD7 should be 0x00010000.
7. **Select 4-bit mode (optional)** CMD52 (Write 0x07=0x02)
8. **Enable func1** CMD52 (Write 0x02=0x02)
9. **Enable SDIO interrupt (required if interrupt line (DAT1) is used)** CMD52 (Write 0x04=0x03)
10. **Set Func0 blocksize (optional, default value is 512 (0x200))** CMD52/53 (Read 0x10~0x11)
    CMD52/53 (Write 0x10=0x00)
    CMD52/53 (Write 0x11=0x02)
    CMD52/53 (Read 0x10~0x11, read to check the final value)
11. **Set Func1 blocksize (optional, default value is 512 (0x200))** CMD52/53 (Read 0x110~0x111)
    CMD52/53 (Write 0x110=0x00)
    CMD52/53 (Write 0x111=0x02)
    CMD52/53 (Read 0x110~0x111, read to check the final value)

ESP SDIO Slave Protocol The ESP SDIO Slave protocol is based on the SDIO Specification's I/O Read/Write commands, i.e., CMD52 and CMD53. The protocol offers the following services:

- Sending FIFO and receiving FIFO

- 52 8-bit R/W registers shared by host and slave (For details, see *ESP32 Technical Reference Manual* > *SDIO Slave Controller* > *Register Summary* > SDIO SLC Host registers [PDF]
- 16 general purpose interrupt sources, 8 from host to slave and 8 from slave to host

To begin communication, the host needs to enable the I/O Function 1 in the slave and access its registers as described below.

Check the code example peripherals/sdio.

The *ESP Serial Slave Link* component implements the logic of this protocol for ESP32 SDIO Host when communicating with an ESP32 SDIO slave.

Slave register table

32-bit

- 0x044 (TOKEN_RDATA): in which bit 27-16 holds the number of the receiving buffer.
- 0x058 (INT_ST): holds the interrupt source bits from slave to host.
- 0x060 (PKT_LEN): holds the accumulated data length (in bytes) already read by host plus the data copied to the buffer but yet to be read.
- 0x0D4 (INT_CLR): write 1 to clear interrupt bits corresponding to INT_ST.
- 0x0DC (INT_ENA): mask bits for interrupts from slave to host.

8-bit Shared general purpose registers:

- 0x06C-0x077: R/W registers 0-11 shared by slave and host.
- 0x07A-0x07B: R/W registers 14-15 shared by slave and host.
- 0x07E-0x07F: R/W registers 18-19 shared by slave and host.
- 0x088-0x08B: R/W registers 24-27 shared by slave and host.
- 0x09C-0x0BB: R/W registers 32-63 shared by slave and host.

Interrupt Registers: - 0x08D (SLAVE_INT): bits for host to interrupt slave. auto clear.

FIFO (sending and receiving) 0x090 - 0x1F7FF are reserved for FIFOs.

The address of CMD53 is related to the length requested to read from or write to the slave in a single transfer, as demonstrated by the equation below:

requested length = 0x1F800-address

The slave will respond with data that has a length equal to the length field of CMD53. In cases where the data is longer than the *requested length*, the data will be zero filled (when sending) or discarded (when receiving). This includes both the block and the byte mode of CMD53.

Note: The function number should be set to 1, OP Code should be set to 1 (for CMD53).

In order to achieve higher efficiency when accessing the FIFO by an arbitrary length, the block and byte modes of CMD53 can be used in combination. For example, given that the block size is set to 512 by default, you can write/get 1031 bytes of data from the FIFO by doing the following:

1. Send CMD53 in block mode, block count=2 (1024 bytes) to address 0x1F3F9=0x1F800-**1031**.
2. Then send CMD53 in byte mode, byte count=8 (or 7 if your controller supports that) to address 0x1F7F9=0x1F800-**7**.

Interrupts SDIO interrupts are "level sensitive". For host interrupts, the slave sends an interrupt by pulling the DAT1 line down at a proper time. The host detects when the interrupt line is pulled down and reads the INT_ST register to determine the source of the interrupt. After that, the host can clear the interrupt bits by writing the INT_CLR register and process the interrupt. The host can also mask unneeded sources by clearing the bits in the

INT_ENA register corresponding to the sources. If all the sources are cleared (or masked), the DAT1 line goes inactive.

On ESP32, the corresponding host_int bits are: bit 0 to bit 7.

For slave interrupts, the host sends a transfer to write the SLAVE_INT register. Once a bit is set to 1, the slave hardware and the driver will detect it and inform the application.

Receiving FIFO To write to the slave' s receiving FIFO, the host should complete the following steps:

1. **Read the TOKEN1 field (bits 27-16) of the register TOKEN_RDATA (0x044)**. The buffer number remaining is TOKEN1 minus the number of buffers used by host.
2. **Make sure the buffer number is sufficient** (*buffer_size* x *buffer_num* is greater than the data to write, *buffer_size* is pre-defined between the host and the slave before the communication starts). Otherwise, keep returning to Step 1 until the buffer size is sufficient.
3. **Write to the FIFO address with CMD53**. Note that the *requested length* should not exceed the length calculated at Step 2, and the FIFO address is related to *requested length*.
4. **Calculate used buffers**. Note that a partially used buffer at the tail is counted as used.

Sending FIFO To read the slave' s sending FIFO, the host should complete the following steps:

1. **Wait for the interrupt line to become active** (optional, low by default).
2. **Read (poll) the interrupt bits in the INT_ST register** to monitor if new packets exist.
3. **If new packets are ready, read the PKT_LEN register**. Before reading the packets, determine the length of data to be read. As the host keeps the length of data already read from the slave, subtract this value from PKT_LEN, the result will be the maximum length of data available for reading. If no data has been added to the sending FIFO yet, wait and poll until the slave is ready and update PKT_LEN.
4. **Read from the FIFO using CMD53**. Note that the *requested length* should not be greater than calculated at Step 3, and the FIFO address is related to *requested length*.
5. **Update the read length**.

Warning: The driver for ESP32 hasn' t been developed yet.

ESP SPI Slave HD (Half Duplex) Mode Protocol

SPI Slave Capabilities of Espressif chips

	ESP32	ESP32-S2	ESP32-C3
SPI Slave HD	N	Y (v2)	Y (v2)
Tohost intr		N	N
Frhost intr		2 *	2 *
TX DMA		Y	Y
RX DMA		Y	Y
Shared registers		72	64

Introduction In the half duplex mode, the master has to use the protocol defined by the slave to communicate with the slave. Each transaction may consist of the following phases (list by the order they should exist):

- Command: 8-bit, master to slave
  This phase determines the rest phases of the transactions. See *Supported Commands*.
- Address: 8-bit, master to slave, optional
  For some commands (WRBUF, RDBUF), this phase specifies the address of shared buffer to write to/read from. For other commands with this phase, they are meaningless, but still have to exist in the transaction.
- Dummy: 8-bit, floating, optional

This phase is the turn around time between the master and the slave on the bus, and also provides enough time for the slave to prepare the data to send to master.

- Data: variable length, the direction is also determined by the command.
  This may be a data OUT phase, in which the direction is slave to master, or a data IN phase, in which the direction is master to slave.

The *direction* means which side (master or slave) controls the MOSI, MISO, WP and HD pins.

Data IO Modes In some IO modes, more data wires can be use to send the data. As a result, the SPI clock cycles required for the same amount of data will be less than in 1-bit mode. For example, in QIO mode, address and data (IN and OUT) should be sent on all 4 data wires (MOSI, MISO, WP, and HD). Here's the modes supported by ESP32-S2 SPI slave and the wire number used in corresponding modes.

Mode	command WN	address WN	dummy cycles	data WN
1-bit	1	1	1	1
DOUT	1	1	4	2
DIO	1	2	4	2
QOUT	1	1	4	4
QIO	1	4	4	4
QPI	4	4	4	4

Normally, which mode is used is determined is determined by the command sent by the master (See *Supported Commands*), except from the QPI mode.

QPI Mode The QPI mode is a special state of the SPI Slave. The master can send ENQPI command to put the slave into the QPI mode state. In the QPI mode, the command is also sent in 4-bit, thus it's not compatible with the normal modes. The master should only send QPI commands when the slave is in the QPI mode. To exit form the QPI mode, master can send EXQPI command.

Supported Commands

Note: The command name are in a master-oriented direction. For example, WRBUF means master writes the buffer of slave.

Name	Description	Command	Address	Data
WRBUF	Write buffer	0x01	Buf addr	master to slave, no longer than buffer size
RDBUF	Read buffer	0x02	Buf addr	slave to master, no longer than buffer size
WRDMA	Write DMA	0x03	8 bits	master to slave, no longer than length provided by slave
RDDMA	Read DMA	0x04	8 bits	slave to master, no longer than length provided by slave
SEG_DONE	Segments done	0x05	•	•
ENQPI	Enter QPI mode	0x06	•	•
WR_DONE	Write segments done	0x07	•	•
CMD8	Interrupt	0x08	•	•
CMD9	Interrupt	0x09	•	•
CMDA	Interrupt	0x0A	•	•
EXQPI	Exit QPI mode	0xDD	•	•

Moreover, WRBUF, RDBUF, WRDMA, RDDMA commands have their 2-bit and 4-bit version. To do transactions in 2-bit or 4-bit mode, send the original command ORed by the corresponding command mask below. For example, command 0xA1 means WRBUF in QIO mode.

Mode	Mask
1-bit	0x00
DOUT	0x10
DIO	0x50
QOUT	0x20
QIO	0xA0
QPI	0xA0

Segment Transaction Mode Segment transaction mode is the only mode supported by the SPI Slave HD driver for now. In this mode, for a transaction the slave load onto the DMA, the master is allowed to read or write in segments. This way the master doesn't have to prepare large buffer as the size of data provided by the slave. After the master finish reading/writing a buffer, it has to send corresponding termination command to the slave as a synchronization signal. The slave driver will update new data (if exist) onto the DMA upon seeing the termination command.

The termination command is WR_DONE (0x07) for the WRDMA, and CMD8 (0x08) for the RDDMA.

Here's an example for the flow the master read data from the slave DMA:

1. The slave loads 4092 bytes of data onto the RDDMA
2. The master do seven RDDMA transactions, each of them are 512 bytes long, and reads the first 3584 bytes from the slave

3. The master do the last RDDMA transaction of 512 bytes (equal, longer or shorter than the total length loaded by the slave are all allowed). The first 508 bytes are valid data from the slave, while the last 4 bytes are meaningless bytes.
4. The master sends CMD8 to the slave
5. The slave loads another 4092 bytes of data onto the RDDMA
6. The master can start new reading transactions after it sends the CMD8

Terminology

- ESSL: Abbreviation for ESP Serial Slave Link, the component described by this document.
- Master: The device running the *esp_serial_slave_link* component.
- ESSL device: a virtual device on the master associated with an ESP slave device. The device context has the knowledge of the slave protocol above the bus, relying on some bus drivers to communicate with the slave.
- ESSL device handle: a handle to ESSL device context containing the configuration, status and data required by the ESSL component. The context stores the driver configurations, communication state, data shared by master and slave, etc.
  The context should be initialized before it is used, and get deinitialized if not used any more. The master application operates on the ESSL device through this handle.
- ESP slave: the slave device connected to the bus, which ESSL component is designed to communicate with.
- Bus: The bus over which the master and the slave communicate with each other.
- Slave protocol: The special communication protocol specified by Espressif HW/SW over the bus.
- TX buffer num: a counter, which is on the slave and can be read by the master, indicates the accumulated buffer numbers that the slave has loaded to the hardware to receive data from the master.
- RX data size: a counter, which is on the slave and can be read by the master, indicates the accumulated data size that the slave has loaded to the hardware to send to the master.

Services provided by ESP slave

There are some common services provided by the Espressif slaves:

1. Tohost Interrupts: The slave can inform the master about certain events by the interrupt line. (optional)
2. Frhost Interrupts: The master can inform the slave about certain events.
3. Tx FIFO (master to slave): the slave can send data in stream to the master. The SDIO slave can also indicate it has new data to send to master by the interrupt line.
   The slave updates the TX buffer num to inform the master how much data it can receive, and the master then read the TX buffer num, and take off the used buffer number to know how many buffers are remaining.
4. Rx FIFO (slave to master): the slave can receive data from the master in units of receiving buffers.
   The slave updates the RX data size to inform the master how much data it has prepared to send, and then the master read the data size, and take off the data length it has already received to know how many data is remaining.
5. Shared registers: the master can read some part of the registers on the slave, and also write these registers to let the slave read.

The services provided by the slave depends on the slave ' s model. See *SDIO Slave Capabilities of Espressif chips* and *SPI Slave Capabilities of Espressif chips* for more details.

Initialization of ESP Serial Slave Link

ESP SDIO Slave The ESP SDIO slave link (ESSL SDIO) devices relies on the sdmmc component. It includes the usage of communicating with ESP SDIO Slave device via SDSPI feature. The ESSL device should be initialized as below:

1. Initialize a sdmmc card (see :doc:` Document of SDMMC driver </api-reference/storage/sdmmc>`) structure.
2. Call `sdmmc_card_init()` to initialize the card.
3. Initialize the ESSL device with `essl_sdio_config_t`. The *card* member should be the `sdmmc_card_t` got in step 2, and the *recv_buffer_size* member should be filled correctly according to pre-negotiated value.

4. Call `essl_init()` to do initialization of the SDIO part.
5. Call `essl_wait_for_ready()` to wait for the slave to be ready.

ESP SPI Slave

Note: If you are communicating with the ESP SDIO Slave device through SPI interface, you should use the *SDIO interface* instead.

Hasn't been supported yet.

APIs

After the initialization process above is performed, you can call the APIs below to make use of the services provided by the slave:

Tohost Interrupts (optional)

1. Call `essl_get_intr_ena()` to know which events will trigger the interrupts to the master.
2. Call `essl_set_intr_ena()` to set the events that will trigger interrupts to the master.
3. Call `essl_wait_int()` to wait until interrupt from the slave, or timeout.
4. When interrupt is triggered, call `essl_get_intr()` to know which events are active, and call `essl_clear_intr()` to clear them.

Frhost Interrupts

1. Call `essl_send_slave_intr()` to trigger general purpose interrupt of the slave.

TX FIFO

1. Call `essl_get_tx_buffer_num()` to know how many buffers the slave has prepared to receive data from the master. This is optional. The master will poll *tx_buffer_num* when it try to send packets to the slave, until the slave has enough buffer or timeout.
2. Call `essl_send_paket()` to send data to the slave.

RX FIFO

1. Call `essl_get_rx_data_size()` to know how many data the slave has prepared to send to the master. This is optional. When the master tries to receive data from the slave, it will update the *rx_data_size* for once, if the current *rx_data_size* is shorter than the buffer size the master prepared to receive. And it may poll the *rx_data_size* if the *rx_dat_size* keeps 0, until timeout.
2. Call `essl_get_packet()` to receive data from the slave.

Reset counters (Optional) Call `essl_reset_cnt()` to reset the internal counter if you find the slave has reset its counter.

Application Example

The example below shows how ESP32 SDIO host and slave communicate with each other. The host use the ESSL SDIO.

peripherals/sdio.

Please refer to the specific example README.md for details.

API Reference

Header File

- components/esp_serial_slave_link/include/esp_serial_slave_link/essl.h

Functions

esp_err_t **essl_init** (*essl_handle_t* handle, uint32_t wait_ms)

Initialize the slave.

Parameters
- **handle** –Handle of an ESSL device.
- **wait_ms** –Millisecond to wait before timeout, will not wait at all if set to 0-9.

Returns
- ESP_OK: If success
- ESP_ERR_NOT_SUPPORTED: Current device does not support this function.
- Other value returned from lower layer `init`.

esp_err_t **essl_wait_for_ready** (*essl_handle_t* handle, uint32_t wait_ms)

Wait for interrupt of an ESSL slave device.

Parameters
- **handle** –Handle of an ESSL device.
- **wait_ms** –Millisecond to wait before timeout, will not wait at all if set to 0-9.

Returns
- ESP_OK: If success
- ESP_ERR_NOT_SUPPORTED: Current device does not support this function.
- One of the error codes from SDMMC host controller

esp_err_t **essl_get_tx_buffer_num** (*essl_handle_t* handle, uint32_t *out_tx_num, uint32_t wait_ms)

Get buffer num for the host to send data to the slave. The buffers are size of `buffer_size`.

Parameters
- **handle** –Handle of a ESSL device.
- **out_tx_num** –Output of buffer num that host can send data to ESSL slave.
- **wait_ms** –Millisecond to wait before timeout, will not wait at all if set to 0-9.

Returns
- ESP_OK: Success
- ESP_ERR_NOT_SUPPORTED: This API is not supported in this mode
- One of the error codes from SDMMC/SPI host controller

esp_err_t **essl_get_rx_data_size** (*essl_handle_t* handle, uint32_t *out_rx_size, uint32_t wait_ms)

Get the size, in bytes, of the data that the ESSL slave is ready to send

Parameters
- **handle** –Handle of an ESSL device.
- **out_rx_size** –Output of data size to read from slave, in bytes
- **wait_ms** –Millisecond to wait before timeout, will not wait at all if set to 0-9.

Returns
- ESP_OK: Success
- ESP_ERR_NOT_SUPPORTED: This API is not supported in this mode
- One of the error codes from SDMMC/SPI host controller

esp_err_t **essl_reset_cnt** (*essl_handle_t* handle)

Reset the counters of this component. Usually you don't need to do this unless you know the slave is reset.

Parameters **handle** –Handle of an ESSL device.

Returns
- ESP_OK: Success
- ESP_ERR_NOT_SUPPORTED: This API is not supported in this mode
- ESP_ERR_INVALID_ARG: Invalid argument, handle is not init.

esp_err_t **essl_send_packet** (*essl_handle_t* handle, const void *start, size_t length, uint32_t wait_ms)

Send a packet to the ESSL Slave. The Slave receives the packet into buffers whose size is `buffer_size` (configured during initialization).

Parameters

- **handle** –Handle of an ESSL device.
- **start** –Start address of the packet to send
- **length** –Length of data to send, if the packet is over-size, the it will be divided into blocks and hold into different buffers automatically.
- **wait_ms** –Millisecond to wait before timeout, will not wait at all if set to 0-9.

Returns

- ESP_OK Success
- ESP_ERR_INVALID_ARG: Invalid argument, handle is not init or other argument is not valid.
- ESP_ERR_TIMEOUT: No buffer to use, or error ftrom SDMMC host controller.
- ESP_ERR_NOT_FOUND: Slave is not ready for receiving.
- ESP_ERR_NOT_SUPPORTED: This API is not supported in this mode
- One of the error codes from SDMMC/SPI host controller.

esp_err_t **essl_get_packet** (*essl_handle_t* handle, void *out_data, size_t size, size_t *out_length, uint32_t wait_ms)

Get a packet from ESSL slave.

Parameters

- **handle** –Handle of an ESSL device.
- **out_data** –**[out]** Data output address
- **size** –The size of the output buffer, if the buffer is smaller than the size of data to receive from slave, the driver returns `ESP_ERR_NOT_FINISHED`
- **out_length** –**[out]** Output of length the data actually received from slave.
- **wait_ms** –Millisecond to wait before timeout, will not wait at all if set to 0-9.

Returns

- ESP_OK Success: All the data has been read from the slave.
- ESP_ERR_INVALID_ARG: Invalid argument, The handle is not initialized or the other arguments are invalid.
- ESP_ERR_NOT_FINISHED: Read was successful, but there is still data remaining.
- ESP_ERR_NOT_FOUND: Slave is not ready to send data.
- ESP_ERR_NOT_SUPPORTED: This API is not supported in this mode
- One of the error codes from SDMMC/SPI host controller.

esp_err_t **essl_write_reg** (*essl_handle_t* handle, uint8_t addr, uint8_t value, uint8_t *value_o, uint32_t wait_ms)

Write general purpose R/W registers (8-bit) of ESSL slave.

Note: sdio 28-31 are reserved, the lower API helps to skip.

Parameters

- **handle** –Handle of an ESSL device.
- **addr** –Address of register to write. For SDIO, valid address: 0-59. For SPI, see `essl_spi.h`
- **value** –Value to write to the register.
- **value_o** –Output of the returned written value.
- **wait_ms** –Millisecond to wait before timeout, will not wait at all if set to 0-9.

Returns

- ESP_OK Success
- One of the error codes from SDMMC/SPI host controller

esp_err_t **essl_read_reg** (*essl_handle_t* handle, uint8_t add, uint8_t *value_o, uint32_t wait_ms)

Read general purpose R/W registers (8-bit) of ESSL slave.

Parameters

- **handle** –Handle of a essl device.
- **add** –Address of register to read. For SDIO, Valid address: 0-27, 32-63 (28-31 reserved, return interrupt bits on read). For SPI, see essl_spi.h
- **value_o** –Output value read from the register.
- **wait_ms** –Millisecond to wait before timeout, will not wait at all if set to 0-9.

Returns

- ESP_OK Success
- One of the error codes from SDMMC/SPI host controller

esp_err_t **essl_wait_int**(*essl_handle_t* handle, uint32_t wait_ms)

wait for an interrupt of the slave

Parameters

- **handle** –Handle of an ESSL device.
- **wait_ms** –Millisecond to wait before timeout, will not wait at all if set to 0-9.

Returns

- ESP_OK: If interrupt is triggered.
- ESP_ERR_NOT_SUPPORTED: Current device does not support this function.
- ESP_ERR_TIMEOUT: No interrupts before timeout.

esp_err_t **essl_clear_intr**(*essl_handle_t* handle, uint32_t intr_mask, uint32_t wait_ms)

Clear interrupt bits of ESSL slave. All the bits set in the mask will be cleared, while other bits will stay the same.

Parameters

- **handle** –Handle of an ESSL device.
- **intr_mask** –Mask of interrupt bits to clear.
- **wait_ms** –Millisecond to wait before timeout, will not wait at all if set to 0-9.

Returns

- ESP_OK: Success
- ESP_ERR_NOT_SUPPORTED: Current device does not support this function.
- One of the error codes from SDMMC host controller

esp_err_t **essl_get_intr**(*essl_handle_t* handle, uint32_t *intr_raw, uint32_t *intr_st, uint32_t wait_ms)

Get interrupt bits of ESSL slave.

Parameters

- **handle** –Handle of an ESSL device.
- **intr_raw** –Output of the raw interrupt bits. Set to NULL if only masked bits are read.
- **intr_st** –Output of the masked interrupt bits. set to NULL if only raw bits are read.
- **wait_ms** –Millisecond to wait before timeout, will not wait at all if set to 0-9.

Returns

- ESP_OK: Success
- ESP_INVALID_ARG: If both intr_raw and intr_st are NULL.
- ESP_ERR_NOT_SUPPORTED: Current device does not support this function.
- One of the error codes from SDMMC host controller

esp_err_t **essl_set_intr_ena**(*essl_handle_t* handle, uint32_t ena_mask, uint32_t wait_ms)

Set interrupt enable bits of ESSL slave. The slave only sends interrupt on the line when there is a bit both the raw status and the enable are set.

Parameters

- **handle** –Handle of an ESSL device.
- **ena_mask** –Mask of the interrupt bits to enable.
- **wait_ms** –Millisecond to wait before timeout, will not wait at all if set to 0-9.

Returns

- ESP_OK: Success
- ESP_ERR_NOT_SUPPORTED: Current device does not support this function.
- One of the error codes from SDMMC host controller

esp_err_t **essl_get_intr_ena**(*essl_handle_t* handle, uint32_t *ena_mask_o, uint32_t wait_ms)

Get interrupt enable bits of ESSL slave.

Parameters
- **handle** –Handle of an ESSL device.
- **ena_mask_o** –Output of interrupt bit enable mask.
- **wait_ms** –Millisecond to wait before timeout, will not wait at all if set to 0-9.

Returns
- ESP_OK Success
- One of the error codes from SDMMC host controller

esp_err_t **essl_send_slave_intr**(*essl_handle_t* handle, uint32_t intr_mask, uint32_t wait_ms)

Send interrupts to slave. Each bit of the interrupt will be triggered.

Parameters
- **handle** –Handle of an ESSL device.
- **intr_mask** –Mask of interrupt bits to send to slave.
- **wait_ms** –Millisecond to wait before timeout, will not wait at all if set to 0-9.

Returns
- ESP_OK: Success
- ESP_ERR_NOT_SUPPORTED: Current device does not support this function.
- One of the error codes from SDMMC host controller

Type Definitions

typedef struct essl_dev_t ***essl_handle_t**

Handle of an ESSL device.

Header File

- components/esp_serial_slave_link/include/esp_serial_slave_link/essl_sdio.h

Functions

esp_err_t **essl_sdio_init_dev**(*essl_handle_t* *out_handle, const *essl_sdio_config_t* *config)

Initialize the ESSL SDIO device and get its handle.

Parameters
- **out_handle** –Output of the handle.
- **config** –Configuration for the ESSL SDIO device.

Returns
- ESP_OK: on success
- ESP_ERR_NO_MEM: memory exhausted.

esp_err_t **essl_sdio_deinit_dev**(*essl_handle_t* handle)

Deinitialize and free the space used by the ESSL SDIO device.

Parameters **handle** –Handle of the ESSL SDIO device to deinit.

Returns
- ESP_OK: on success
- ESP_ERR_INVALID_ARG: wrong handle passed

Structures

struct **essl_sdio_config_t**

Configuration for the ESSL SDIO device.

Public Members

sdmmc_card_t ***card**

The initialized sdmmc card pointer of the slave.

int **recv_buffer_size**

The pre-negotiated recv buffer size used by both the host and the slave.

Header File

- components/esp_serial_slave_link/include/esp_serial_slave_link/essl_spi.h

Functions

esp_err_t **essl_spi_init_dev**(*essl_handle_t* *out_handle, const *essl_spi_config_t* *init_config)

Initialize the ESSL SPI device function list and get its handle.

Parameters
- **out_handle** –**[out]** Output of the handle
- **init_config** –Configuration for the ESSL SPI device

Returns
- ESP_OK: On success
- ESP_ERR_NO_MEM: Memory exhausted
- ESP_ERR_INVALID_STATE: SPI driver is not initialized
- ESP_ERR_INVALID_ARG: Wrong register ID

esp_err_t **essl_spi_deinit_dev**(*essl_handle_t* handle)

Deinitialize the ESSL SPI device and free the memory used by the device.

Parameters **handle** –Handle of the ESSL SPI device

Returns
- ESP_OK: On success
- ESP_ERR_INVALID_STATE: ESSL SPI is not in use

esp_err_t **essl_spi_read_reg**(void *arg, uint8_t addr, uint8_t *out_value, uint32_t wait_ms)

Read from the shared registers.

Note: The registers for Master/Slave synchronization are reserved. Do not use them. (see `rx_sync_reg` in *`essl_spi_config_t`*)

Parameters
- **arg** –Context of the component. (Member `arg` from `essl_handle_t`)
- **addr** –Address of the shared registers. (Valid: 0 ~ SOC_SPI_MAXIMUM_BUFFER_SIZE, registers for M/S sync are reserved, see note1).
- **out_value** –**[out]** Read buffer for the shared registers.
- **wait_ms** –Time to wait before timeout (reserved for future use, user should set this to 0).

Returns
- ESP_OK: success
- ESP_ERR_INVALID_STATE: ESSL SPI has not been initialized.
- ESP_ERR_INVALID_ARG: The address argument is not valid. See note 1.
- or other return value from :cpp:func:`spi_device_transmit`.

esp_err_t **essl_spi_get_packet**(void *arg, void *out_data, size_t size, uint32_t wait_ms)

Get a packet from Slave.

Parameters

- **arg** –Context of the component. (Member `arg` from `essl_handle_t`)
- **out_data** –**[out]** Output data address
- **size** –The size of the output data.
- **wait_ms** –Time to wait before timeout (reserved for future use, user should set this to 0).

Returns

- ESP_OK: On Success
- ESP_ERR_INVALID_STATE: ESSL SPI has not been initialized.
- ESP_ERR_INVALID_ARG: The output data address is neither DMA capable nor 4 byte-aligned
- ESP_ERR_INVALID_SIZE: Master requires `size` bytes of data but Slave did not load enough bytes.

esp_err_t **essl_spi_write_reg**(void *arg, uint8_t addr, uint8_t value, uint8_t *out_value, uint32_t wait_ms)

Write to the shared registers.

Note: The registers for Master/Slave synchronization are reserved. Do not use them. (see `tx_sync_reg` in *essl_spi_config_t*)

Note: Feature of checking the actual written value (`out_value`) is not supported.

Parameters

- **arg** –Context of the component. (Member `arg` from `essl_handle_t`)
- **addr** –Address of the shared registers. (Valid: 0 ~ SOC_SPI_MAXIMUM_BUFFER_SIZE, registers for M/S sync are reserved, see note1)
- **value** –Buffer for data to send, should be align to 4.
- **out_value** –**[out]** Not supported, should be set to NULL.
- **wait_ms** –Time to wait before timeout (reserved for future use, user should set this to 0).

Returns

- ESP_OK: success
- ESP_ERR_INVALID_STATE: ESSL SPI has not been initialized.
- ESP_ERR_INVALID_ARG: The address argument is not valid. See note 1.
- ESP_ERR_NOT_SUPPORTED: Should set `out_value` to NULL. See note 2.
- or other return value from :cpp:func:`spi_device_transmit`.

esp_err_t **essl_spi_send_packet**(void *arg, const void *data, size_t size, uint32_t wait_ms)

Send a packet to Slave.

Parameters

- **arg** –Context of the component. (Member `arg` from `essl_handle_t`)
- **data** –Address of the data to send
- **size** –Size of the data to send.
- **wait_ms** –Time to wait before timeout (reserved for future use, user should set this to 0).

Returns

- ESP_OK: On success
- ESP_ERR_INVALID_STATE: ESSL SPI has not been initialized.
- ESP_ERR_INVALID_ARG: The data address is not DMA capable
- ESP_ERR_INVALID_SIZE: Master will send `size` bytes of data but Slave did not load enough RX buffer

void **essl_spi_reset_cnt**(void *arg)

Reset the counter in Master context.

Note: Shall only be called if the slave has reset its counter. Else, Slave and Master would be desynchronized

---

Parameters **arg** –Context of the component. (Member `arg` from `essl_handle_t`)

esp_err_t **essl_spi_rdbuf**(*spi_device_handle_t* spi, uint8_t *out_data, int addr, int len, uint32_t flags)

Read the shared buffer from the slave in ISR way.

Note: The slave's HW doesn't guarantee the data in one SPI transaction is consistent. It sends data in unit of byte. In other words, if the slave SW attempts to update the shared register when a rdbuf SPI transaction is in-flight, the data got by the master will be the combination of bytes of different writes of slave SW.

Note: `out_data` should be prepared in words and in the DRAM. The buffer may be written in words by the DMA. When a byte is written, the remaining bytes in the same word will also be overwritten, even the `len` is shorter than a word.

Parameters

- **spi** –SPI device handle representing the slave
- **out_data** –**[out]** Buffer for read data, strongly suggested to be in the DRAM and aligned to 4
- **addr** –Address of the slave shared buffer
- **len** –Length to read
- **flags** –`SPI_TRANS_*` flags to control the transaction mode of the transaction to send.

Returns

- ESP_OK: on success
- or other return value from :cpp:func:`spi_device_transmit`.

esp_err_t **essl_spi_rdbuf_polling**(*spi_device_handle_t* spi, uint8_t *out_data, int addr, int len, uint32_t flags)

Read the shared buffer from the slave in polling way.

Note: `out_data` should be prepared in words and in the DRAM. The buffer may be written in words by the DMA. When a byte is written, the remaining bytes in the same word will also be overwritten, even the `len` is shorter than a word.

Parameters

- **spi** –SPI device handle representing the slave
- **out_data** –**[out]** Buffer for read data, strongly suggested to be in the DRAM and aligned to 4
- **addr** –Address of the slave shared buffer
- **len** –Length to read
- **flags** –`SPI_TRANS_*` flags to control the transaction mode of the transaction to send.

Returns

- ESP_OK: on success
- or other return value from :cpp:func:`spi_device_transmit`.

esp_err_t **essl_spi_wrbuf**(*spi_device_handle_t* spi, const uint8_t *data, int addr, int len, uint32_t flags)

Write the shared buffer of the slave in ISR way.

Note: `out_data` should be prepared in words and in the DRAM. The buffer may be written in words by the DMA. When a byte is written, the remaining bytes in the same word will also be overwritten, even the `len` is shorter than a word.

Parameters

- **`spi`** –SPI device handle representing the slave
- **`data`** –Buffer for data to send, strongly suggested to be in the DRAM
- **`addr`** –Address of the slave shared buffer,
- **`len`** –Length to write
- **`flags`** –`SPI_TRANS_*` flags to control the transaction mode of the transaction to send.

Returns

- ESP_OK: success
- or other return value from :cpp:func:`spi_device_transmit`.

esp_err_t **`essl_spi_wrbuf_polling`**(*spi_device_handle_t* spi, const uint8_t *data, int addr, int len, uint32_t flags)

Write the shared buffer of the slave in polling way.

Note: `out_data` should be prepared in words and in the DRAM. The buffer may be written in words by the DMA. When a byte is written, the remaining bytes in the same word will also be overwritten, even the `len` is shorter than a word.

Parameters

- **`spi`** –SPI device handle representing the slave
- **`data`** –Buffer for data to send, strongly suggested to be in the DRAM
- **`addr`** –Address of the slave shared buffer,
- **`len`** –Length to write
- **`flags`** –`SPI_TRANS_*` flags to control the transaction mode of the transaction to send.

Returns

- ESP_OK: success
- or other return value from :cpp:func:`spi_device_polling_transmit`.

esp_err_t **`essl_spi_rddma`**(*spi_device_handle_t* spi, uint8_t *out_data, int len, int seg_len, uint32_t flags)

Receive long buffer in segments from the slave through its DMA.

Note: This function combines several :cpp:func:`essl_spi_rddma_seg` and one :cpp:func:`essl_spi_rddma_done` at the end. Used when the slave is working in segment mode.

Parameters

- **`spi`** –SPI device handle representing the slave
- **`out_data`** –**[out]** Buffer to hold the received data, strongly suggested to be in the DRAM and aligned to 4
- **`len`** –Total length of data to receive.
- **`seg_len`** –Length of each segment, which is not larger than the maximum transaction length allowed for the spi device. Suggested to be multiples of 4. When set < 0, means send all data in one segment (the `rddma_done` will still be sent.)
- **`flags`** –`SPI_TRANS_*` flags to control the transaction mode of the transaction to send.

Returns

- ESP_OK: success
- or other return value from :cpp:func:`spi_device_transmit`.

esp_err_t **essl_spi_rddma_seg** (*spi_device_handle_t* spi, uint8_t *out_data, int seg_len, uint32_t flags)

Read one data segment from the slave through its DMA.

Note: To read long buffer, call :cpp:func:`essl_spi_rddma` instead.

Parameters

- **spi** –SPI device handle representing the slave
- **out_data** –**[out]** Buffer to hold the received data. strongly suggested to be in the DRAM and aligned to 4
- **seg_len** –Length of this segment
- **flags** –`SPI_TRANS_*` flags to control the transaction mode of the transaction to send.

Returns

- ESP_OK: success
- or other return value from :cpp:func:`spi_device_transmit`.

esp_err_t **essl_spi_rddma_done** (*spi_device_handle_t* spi, uint32_t flags)

Send the `rddma_done` command to the slave. Upon receiving this command, the slave will stop sending the current buffer even there are data unsent, and maybe prepare the next buffer to send.

Note: This is required only when the slave is working in segment mode.

Parameters

- **spi** –SPI device handle representing the slave
- **flags** –`SPI_TRANS_*` flags to control the transaction mode of the transaction to send.

Returns

- ESP_OK: success
- or other return value from :cpp:func:`spi_device_transmit`.

esp_err_t **essl_spi_wrdma** (*spi_device_handle_t* spi, const uint8_t *data, int len, int seg_len, uint32_t flags)

Send long buffer in segments to the slave through its DMA.

Note: This function combines several :cpp:func:`essl_spi_wrdma_seg` and one :cpp:func:`essl_spi_wrdma_done` at the end. Used when the slave is working in segment mode.

Parameters

- **spi** –SPI device handle representing the slave
- **data** –Buffer for data to send, strongly suggested to be in the DRAM
- **len** –Total length of data to send.
- **seg_len** –Length of each segment, which is not larger than the maximum transaction length allowed for the spi device. Suggested to be multiples of 4. When set < 0, means send all data in one segment (the `wrdma_done` will still be sent.)
- **flags** –`SPI_TRANS_*` flags to control the transaction mode of the transaction to send.

Returns

- ESP_OK: success
- or other return value from :cpp:func:`spi_device_transmit`.

esp_err_t **essl_spi_wrdma_seg** (*spi_device_handle_t* spi, const uint8_t *data, int seg_len, uint32_t flags)

Send one data segment to the slave through its DMA.

Note: To send long buffer, call :cpp:func:`essl_spi_wrdma` instead.

Parameters

- **spi** –SPI device handle representing the slave
- **data** –Buffer for data to send, strongly suggested to be in the DRAM
- **seg_len** –Length of this segment
- **flags** –SPI_TRANS_* flags to control the transaction mode of the transaction to send.

Returns

- ESP_OK: success
- or other return value from :cpp:func:spi_device_transmit.

esp_err_t **essl_spi_wrdma_done**(*spi_device_handle_t* spi, uint32_t flags)

Send the wrdma_done command to the slave. Upon receiving this command, the slave will stop receiving, process the received data, and maybe prepare the next buffer to receive.

Note: This is required only when the slave is working in segment mode.

Parameters

- **spi** –SPI device handle representing the slave
- **flags** –SPI_TRANS_* flags to control the transaction mode of the transaction to send.

Returns

- ESP_OK: success
- or other return value from :cpp:func:spi_device_transmit.

Structures

struct **essl_spi_config_t**

Configuration of ESSL SPI device.

Public Members

spi_device_handle_t ***spi**

Pointer to SPI device handle.

uint32_t **tx_buf_size**

The pre-negotiated Master TX buffer size used by both the host and the slave.

uint8_t **tx_sync_reg**

The pre-negotiated register ID for Master-TX-SLAVE-RX synchronization. 1 word (4 Bytes) will be reserved for the synchronization.

uint8_t **rx_sync_reg**

The pre-negotiated register ID for Master-RX-Slave-TX synchronization. 1 word (4 Bytes) will be reserved for the synchronization.

2.4.14 ESP x509 Certificate Bundle

Overview

The ESP x509 Certificate Bundle API provides an easy way to include a bundle of custom x509 root certificates for TLS server verification.

Note: The bundle is currently not available when using WolfSSL.

The bundle comes with the complete list of root certificates from Mozilla's NSS root certificate store. Using the gen_crt_bundle.py python utility the certificates' subject name and public key are stored in a file and embedded in the ESP32 binary.

When generating the bundle you may choose between:

- The full root certificate bundle from Mozilla, containing more than 130 certificates. The current bundle was updated Tue Apr 26 03:12:05 2022 GMT.
- A pre-selected filter list of the name of the most commonly used root certificates, reducing the amount of certificates to around 35 while still having around 90 % coverage according to market share statistics.

In addition it is possible to specify a path to a certificate file or a directory containing certificates which then will be added to the generated bundle.

Note: Trusting all root certificates means the list will have to be updated if any of the certificates are retracted. This includes removing them from *cacrt_all.pem*.

Configuration

Most configuration is done through menuconfig. Make and CMake will generate the bundle according to the configuration and embed it.

- *CONFIG_MBEDTLS_CERTIFICATE_BUNDLE*: automatically build and attach the bundle.
- *CONFIG_MBEDTLS_DEFAULT_CERTIFICATE_BUNDLE*: decide which certificates to include from the complete root list.
- *CONFIG_MBEDTLS_CUSTOM_CERTIFICATE_BUNDLE_PATH*: specify the path of any additional certificates to embed in the bundle.

To enable the bundle when using ESP-TLS simply pass the function pointer to the bundle attach function:

```
esp_tls_cfg_t cfg = {
     .crt_bundle_attach = esp_crt_bundle_attach,
};
```

This is done to avoid embedding the certificate bundle unless activated by the user.

If using mbedTLS directly then the bundle may be activated by directly calling the attach function during the setup process:

```
mbedtls_ssl_config conf;
mbedtls_ssl_config_init(&conf);

esp_crt_bundle_attach(&conf);
```

Generating the List of Root Certificates

The list of root certificates comes from Mozilla's NSS root certificate store, which can be found here The list can be downloaded and created by running the script `mk-ca-bundle.pl` that is distributed as a part of curl. Another alternative would be to download the finished list directly from the curl website: CA certificates extracted from Mozilla

The common certificates bundle were made by selecting the authorities with a market share of more than 1 % from w3tech's SSL Survey. These authorities were then used to pick the names of the certificates for the filter list, *cmn_crt_authorities.csv*, from this list provided by Mozilla.

Updating the Certificate Bundle

The bundle is embedded into the app and can be updated along with the app by an OTA update. If you want to include a more up-to-date bundle than the bundle currently included in IDF, then the certificate list can be downloaded from Mozilla as described in *Updating the Certificate Bundle*.

Application Example

Simple HTTPS example that uses ESP-TLS to establish a secure socket connection using the certificate bundle with two custom certificates added for verification: protocols/https_x509_bundle.

HTTPS example that uses ESP-TLS and the default bundle: protocols/https_request.

HTTPS example that uses mbedTLS and the default bundle: protocols/https_mbedtls.

API Reference

Header File

- components/mbedtls/esp_crt_bundle/include/esp_crt_bundle.h

Functions

esp_err_t **esp_crt_bundle_attach**(void *conf)

Attach and enable use of a bundle for certificate verification.

Attach and enable use of a bundle for certificate verification through a verification callback. If no specific bundle has been set through esp_crt_bundle_set() it will default to the bundle defined in menuconfig and embedded in the binary.

Parameters **conf** –**[in]** The config struct for the SSL connection.

Returns

- ESP_OK if adding certificates was successful.
- Other if an error occured or an action must be taken by the calling process.

void **esp_crt_bundle_detach**(mbedtls_ssl_config *conf)

Disable and dealloc the certification bundle.

Removes the certificate verification callback and deallocates used resources

Parameters **conf** –**[in]** The config struct for the SSL connection.

esp_err_t **esp_crt_bundle_set**(const uint8_t *x509_bundle, size_t bundle_size)

Set the default certificate bundle used for verification.

Overrides the default certificate bundle only in case of successful initialization. In most use cases the bundle should be set through menuconfig. The bundle needs to be sorted by subject name since binary search is used to find certificates.

Parameters

- **x509_bundle** –**[in]** A pointer to the certificate bundle.
- **bundle_size** –**[in]** Size of the certificate bundle in bytes.

Returns

- ESP_OK if adding certificates was successful.
- Other if an error occured or an action must be taken by the calling process.

Code examples for this API section are provided in the protocols directory of ESP-IDF examples.

2.4.15 IP Network Layer

Documentation for IP Network Layer protocols (below the Application Protocol layer) are provided in *Networking APIs*.

2.5 Provisioning API

2.5.1 Protocol Communication

Overview

Protocol Communication (protocomm) component manages secure sessions and provides framework for multiple transports. The application can also use protocomm layer directly to have application specific extensions for the provisioning (or non-provisioning) use cases.

Following features are available for provisioning :

- **Communication security at application level -**
  - protocomm_security0 (no security)
  - protocomm_security1 (curve25519 key exchange + AES-CTR encryption)
- Proof-of-possession (support with protocomm_security1 only)

Protocomm internally uses protobuf (protocol buffers) for secure session establishment. Though users can implement their own security (even without using protobuf). One can even use protocomm without any security layer.

Protocomm provides framework for various transports - WiFi (SoftAP+HTTPD), BLE, console - in which case the handler invocation is automatically taken care of on the device side (see Transport Examples below for code snippets).

Note that the client still needs to establish session (only for protocomm_security1) by performing the two way handshake. See *Unified Provisioning* for more details about the secure handshake logic.

Transport Example (SoftAP + HTTP) with Security 1

For complete example see provisioning/legacy/softap_prov

```
/* Endpoint handler to be registered with protocomm.
 * This simply echoes back the received data. */
esp_err_t echo_req_handler (uint32_t session_id,
                            const uint8_t *inbuf, ssize_t inlen,
                            uint8_t **outbuf, ssize_t *outlen,
                            void *priv_data)
{
    /* Session ID may be used for persistence */
    printf("Session ID : %d", session_id);

    /* Echo back the received data */
    *outlen = inlen;            /* Output data length updated */
    *outbuf = malloc(inlen);    /* This will be deallocated outside */
    memcpy(*outbuf, inbuf, inlen);

    /* Private data that was passed at the time of endpoint creation */
    uint32_t *priv = (uint32_t *) priv_data;
    if (priv) {
        printf("Private data : %d", *priv);
    }

    return ESP_OK;
}

/* Example function for launching a protocomm instance over HTTP */
protocomm_t *start_pc(const char *pop_string)
{
    protocomm_t *pc = protocomm_new();
```

(continues on next page)

(continued from previous page)

```
    /* Config for protocomm_httpd_start() */
    protocomm_httpd_config_t pc_config = {
        .data = {
        .config = PROTOCOMM_HTTPD_DEFAULT_CONFIG()
        }
    };

    /* Start protocomm server on top of HTTP */
    protocomm_httpd_start(pc, &pc_config);

    /* Create Proof of Possession object from pop_string. It must be valid
     * throughout the scope of protocomm endpoint. This need not be static,
     * ie. could be dynamically allocated and freed at the time of endpoint
     * removal */
    const static protocomm_security_pop_t pop_obj = {
        .data = (const uint8_t *) strdup(pop_string),
        .len = strlen(pop_string)
    };

    /* Set security for communication at application level. Just like for
     * request handlers, setting security creates an endpoint and registers
     * the handler provided by protocomm_security1. One can similarly use
     * protocomm_security0. Only one type of security can be set for a
     * protocomm instance at a time. */
    protocomm_set_security(pc, "security_endpoint", &protocomm_security1, &pop_obj);

    /* Private data passed to the endpoint must be valid throughout the scope
     * of protocomm endpoint. This need not be static, ie. could be dynamically
     * allocated and freed at the time of endpoint removal */
    static uint32_t priv_data = 1234;

    /* Add a new endpoint for the protocomm instance, identified by a unique name
     * and register a handler function along with private data to be passed at the
     * time of handler execution. Multiple endpoints can be added as long as they
     * are identified by unique names */
    protocomm_add_endpoint(pc, "echo_req_endpoint",
                           echo_req_handler, (void *) &priv_data);
    return pc;
}

/* Example function for stopping a protocomm instance */
void stop_pc(protocomm_t *pc)
{
    /* Remove endpoint identified by it's unique name */
    protocomm_remove_endpoint(pc, "echo_req_endpoint");

    /* Remove security endpoint identified by it's name */
    protocomm_unset_security(pc, "security_endpoint");

    /* Stop HTTP server */
    protocomm_httpd_stop(pc);
```

(continues on next page)

(continued from previous page)

```
    /* Delete (deallocate) the protocomm instance */
    protocomm_delete(pc);
}
```

Transport Example (BLE) with Security 0

For complete example see provisioning/legacy/ble_prov

```
/* Example function for launching a secure protocomm instance over BLE */
protocomm_t *start_pc()
{
    protocomm_t *pc = protocomm_new();

    /* Endpoint UUIDs */
    protocomm_ble_name_uuid_t nu_lookup_table[] = {
        {"security_endpoint", 0xFF51},
        {"echo_req_endpoint", 0xFF52}
    };

    /* Config for protocomm_ble_start() */
    protocomm_ble_config_t config = {
        .service_uuid = {
            /* LSB <---------------------------------------
            * ---------------------------------------> MSB */
            0xfb, 0x34, 0x9b, 0x5f, 0x80, 0x00, 0x00, 0x80,
            0x00, 0x10, 0x00, 0x00, 0xFF, 0xFF, 0x00, 0x00,
        },
        .nu_lookup_count = sizeof(nu_lookup_table)/sizeof(nu_lookup_
↪table[0]),
        .nu_lookup = nu_lookup_table
    };

    /* Start protocomm layer on top of BLE */
    protocomm_ble_start(pc, &config);

    /* For protocomm_security0, Proof of Possession is not used, and can␣
↪be kept NULL */
    protocomm_set_security(pc, "security_endpoint", &protocomm_security0,␣
↪NULL);
    protocomm_add_endpoint(pc, "echo_req_endpoint", echo_req_handler,␣
↪NULL);
    return pc;
}

/* Example function for stopping a protocomm instance */
void stop_pc(protocomm_t *pc)
{
    protocomm_remove_endpoint(pc, "echo_req_endpoint");
    protocomm_unset_security(pc, "security_endpoint");

    /* Stop BLE protocomm service */
    protocomm_ble_stop(pc);

    protocomm_delete(pc);
}
```

API Reference

Header File

- components/protocomm/include/common/protocomm.h

Functions

protocomm_t ***protocomm_new** (void)

Create a new protocomm instance.

This API will return a new dynamically allocated protocomm instance with all elements of the protocomm_t structure initialized to NULL.

Returns

- protocomm_t* : On success
- NULL : No memory for allocating new instance

void **protocomm_delete** (*protocomm_t* *pc)

Delete a protocomm instance.

This API will deallocate a protocomm instance that was created using `protocomm_new()`.

Parameters **pc** –**[in]** Pointer to the protocomm instance to be deleted

esp_err_t **protocomm_add_endpoint** (*protocomm_t* *pc, const char *ep_name, *protocomm_req_handler_t* h, void *priv_data)

Add endpoint request handler for a protocomm instance.

This API will bind an endpoint handler function to the specified endpoint name, along with any private data that needs to be pass to the handler at the time of call.

Note:

- An endpoint must be bound to a valid protocomm instance, created using `protocomm_new()`.
- This function internally calls the registered `add_endpoint()` function of the selected transport which is a member of the protocomm_t instance structure.

Parameters

- **pc** –**[in]** Pointer to the protocomm instance
- **ep_name** –**[in]** Endpoint identifier(name) string
- **h** –**[in]** Endpoint handler function
- **priv_data** –**[in]** Pointer to private data to be passed as a parameter to the handler function on call. Pass NULL if not needed.

Returns

- ESP_OK : Success
- ESP_FAIL : Error adding endpoint / Endpoint with this name already exists
- ESP_ERR_NO_MEM : Error allocating endpoint resource
- ESP_ERR_INVALID_ARG : Null instance/name/handler arguments

esp_err_t **protocomm_remove_endpoint** (*protocomm_t* *pc, const char *ep_name)

Remove endpoint request handler for a protocomm instance.

This API will remove a registered endpoint handler identified by an endpoint name.

Note:

- This function internally calls the registered `remove_endpoint()` function which is a member of the protocomm_t instance structure.

Parameters

- **pc** –**[in]** Pointer to the protocomm instance

- **ep_name** –**[in]** Endpoint identifier(name) string

Returns

- ESP_OK : Success
- ESP_ERR_NOT_FOUND : Endpoint with specified name doesn’ t exist
- ESP_ERR_INVALID_ARG : Null instance/name arguments

esp_err_t **protocomm_open_session** (*protocomm_t* *pc, uint32_t session_id)

Allocates internal resources for new transport session.

Note:

- An endpoint must be bound to a valid protocomm instance, created using `protocomm_new()`.

Parameters

- **pc** –**[in]** Pointer to the protocomm instance
- **session_id** –**[in]** Unique ID for a communication session

Returns

- ESP_OK : Request handled successfully
- ESP_ERR_NO_MEM : Error allocating internal resource
- ESP_ERR_INVALID_ARG : Null instance/name arguments

esp_err_t **protocomm_close_session** (*protocomm_t* *pc, uint32_t session_id)

Frees internal resources used by a transport session.

Note:

- An endpoint must be bound to a valid protocomm instance, created using `protocomm_new()`.

Parameters

- **pc** –**[in]** Pointer to the protocomm instance
- **session_id** –**[in]** Unique ID for a communication session

Returns

- ESP_OK : Request handled successfully
- ESP_ERR_INVALID_ARG : Null instance/name arguments

esp_err_t **protocomm_req_handle** (*protocomm_t* *pc, const char *ep_name, uint32_t session_id, const uint8_t *inbuf, ssize_t inlen, uint8_t **outbuf, ssize_t *outlen)

Calls the registered handler of an endpoint session for processing incoming data and generating the response.

Note:

- An endpoint must be bound to a valid protocomm instance, created using `protocomm_new()`.
- Resulting output buffer must be deallocated by the caller.

Parameters

- **pc** –**[in]** Pointer to the protocomm instance
- **ep_name** –**[in]** Endpoint identifier(name) string
- **session_id** –**[in]** Unique ID for a communication session
- **inbuf** –**[in]** Input buffer contains input request data which is to be processed by the registered handler
- **inlen** –**[in]** Length of the input buffer
- **outbuf** –**[out]** Pointer to internally allocated output buffer, where the resulting response data output from the registered handler is to be stored
- **outlen** –**[out]** Buffer length of the allocated output buffer

Returns

- ESP_OK : Request handled successfully
- ESP_FAIL : Internal error in execution of registered handler
- ESP_ERR_NO_MEM : Error allocating internal resource
- ESP_ERR_NOT_FOUND : Endpoint with specified name doesn't exist
- ESP_ERR_INVALID_ARG : Null instance/name arguments

esp_err_t **protocomm_set_security** (*protocomm_t* *pc, const char *ep_name, const *protocomm_security_t* *sec, const *protocomm_security_pop_t* *pop)

Add endpoint security for a protocomm instance.

This API will bind a security session establisher to the specified endpoint name, along with any proof of possession that may be required for authenticating a session client.

Note:

- An endpoint must be bound to a valid protocomm instance, created using `protocomm_new()`.
- The choice of security can be any `protocomm_security_t` instance. Choices `protocomm_security0` and `protocomm_security1` are readily available.

Parameters

- **pc** –**[in]** Pointer to the protocomm instance
- **ep_name** –**[in]** Endpoint identifier(name) string
- **sec** –**[in]** Pointer to endpoint security instance
- **pop** –**[in]** Pointer to proof of possession for authenticating a client

Returns

- ESP_OK : Success
- ESP_FAIL : Error adding endpoint / Endpoint with this name already exists
- ESP_ERR_INVALID_STATE : Security endpoint already set
- ESP_ERR_NO_MEM : Error allocating endpoint resource
- ESP_ERR_INVALID_ARG : Null instance/name/handler arguments

esp_err_t **protocomm_unset_security** (*protocomm_t* *pc, const char *ep_name)

Remove endpoint security for a protocomm instance.

This API will remove a registered security endpoint identified by an endpoint name.

Parameters

- **pc** –**[in]** Pointer to the protocomm instance
- **ep_name** –**[in]** Endpoint identifier(name) string

Returns

- ESP_OK : Success
- ESP_ERR_NOT_FOUND : Endpoint with specified name doesn't exist
- ESP_ERR_INVALID_ARG : Null instance/name arguments

esp_err_t **protocomm_set_version** (*protocomm_t* *pc, const char *ep_name, const char *version)

Set endpoint for version verification.

This API can be used for setting an application specific protocol version which can be verified by clients through the endpoint.

Note:

- An endpoint must be bound to a valid protocomm instance, created using `protocomm_new()`.

Parameters

- **pc** –**[in]** Pointer to the protocomm instance
- **ep_name** –**[in]** Endpoint identifier(name) string

- **version** –**[in]** Version identifier(name) string

Returns

- ESP_OK : Success
- ESP_FAIL : Error adding endpoint / Endpoint with this name already exists
- ESP_ERR_INVALID_STATE : Version endpoint already set
- ESP_ERR_NO_MEM : Error allocating endpoint resource
- ESP_ERR_INVALID_ARG : Null instance/name/handler arguments

esp_err_t **protocomm_unset_version**(*protocomm_t* *pc, const char *ep_name)

Remove version verification endpoint from a protocomm instance.

This API will remove a registered version endpoint identified by an endpoint name.

Parameters

- **pc** –**[in]** Pointer to the protocomm instance
- **ep_name** –**[in]** Endpoint identifier(name) string

Returns

- ESP_OK : Success
- ESP_ERR_NOT_FOUND : Endpoint with specified name doesn't exist
- ESP_ERR_INVALID_ARG : Null instance/name arguments

Type Definitions

typedef *esp_err_t* (***protocomm_req_handler_t**)(uint32_t session_id, const uint8_t *inbuf, ssize_t inlen, uint8_t **outbuf, ssize_t *outlen, void *priv_data)

Function prototype for protocomm endpoint handler.

typedef struct protocomm **protocomm_t**

This structure corresponds to a unique instance of protocomm returned when the API `protocomm_new()` is called. The remaining Protocomm APIs require this object as the first parameter.

Note: Structure of the protocomm object is kept private

Header File

- components/protocomm/include/security/protocomm_security.h

Structures

struct **protocomm_security_pop**

Proof Of Possession for authenticating a secure session.

Public Members

const uint8_t ***data**

Pointer to buffer containing the proof of possession data

uint16_t **len**

Length (in bytes) of the proof of possession data

struct **protocomm_security**

Protocomm security object structure.

The member functions are used for implementing secure protocomm sessions.

Note: This structure should not have any dynamic members to allow re-entrancy

Public Members

int **ver**

Unique version number of security implementation

esp_err_t (***init**)(*protocomm_security_handle_t* *handle)

Function for initializing/allocating security infrastructure

esp_err_t (***cleanup**)(*protocomm_security_handle_t* handle)

Function for deallocating security infrastructure

esp_err_t (***new_transport_session**)(*protocomm_security_handle_t* handle, uint32_t session_id)

Starts new secure transport session with specified ID

esp_err_t (***close_transport_session**)(*protocomm_security_handle_t* handle, uint32_t session_id)

Closes a secure transport session with specified ID

esp_err_t (***security_req_handler**)(*protocomm_security_handle_t* handle, const *protocomm_security_pop_t* *pop, uint32_t session_id, const uint8_t *inbuf, ssize_t inlen, uint8_t **outbuf, ssize_t *outlen, void *priv_data)

Handler function for authenticating connection request and establishing secure session

esp_err_t (***encrypt**)(*protocomm_security_handle_t* handle, uint32_t session_id, const uint8_t *inbuf, ssize_t inlen, uint8_t *outbuf, ssize_t *outlen)

Function which implements the encryption algorithm

esp_err_t (***decrypt**)(*protocomm_security_handle_t* handle, uint32_t session_id, const uint8_t *inbuf, ssize_t inlen, uint8_t *outbuf, ssize_t *outlen)

Function which implements the decryption algorithm

Type Definitions

typedef struct *protocomm_security_pop* **protocomm_security_pop_t**

Proof Of Possession for authenticating a secure session.

typedef void ***protocomm_security_handle_t**

typedef struct *protocomm_security* **protocomm_security_t**

Protocomm security object structure.

The member functions are used for implementing secure protocomm sessions.

Note: This structure should not have any dynamic members to allow re-entrancy

Header File

- components/protocomm/include/security/protocomm_security0.h

Header File

- components/protocomm/include/security/protocomm_security1.h

Header File

- components/protocomm/include/transports/protocomm_httpd.h

Functions

esp_err_t **protocomm_httpd_start** (*protocomm_t* *pc, const *protocomm_httpd_config_t* *config)

Start HTTPD protocomm transport.

This API internally creates a framework to allow endpoint registration and security configuration for the protocomm.

Note: This is a singleton. ie. Protocomm can have multiple instances, but only one instance can be bound to an HTTP transport layer.

Parameters

- **pc** –**[in]** Protocomm instance pointer obtained from protocomm_new()
- **config** –**[in]** Pointer to config structure for initializing HTTP server

Returns

- ESP_OK : Success
- ESP_ERR_INVALID_ARG : Null arguments
- ESP_ERR_NOT_SUPPORTED : Transport layer bound to another protocomm instance
- ESP_ERR_INVALID_STATE : Transport layer already bound to this protocomm instance
- ESP_ERR_NO_MEM : Memory allocation for server resource failed
- ESP_ERR_HTTPD_* : HTTP server error on start

esp_err_t **protocomm_httpd_stop** (*protocomm_t* *pc)

Stop HTTPD protocomm transport.

This API cleans up the HTTPD transport protocomm and frees all the handlers registered with the protocomm.

Parameters **pc** –**[in]** Same protocomm instance that was passed to protocomm_httpd_start()

Returns

- ESP_OK : Success
- ESP_ERR_INVALID_ARG : Null / incorrect protocomm instance pointer

Unions

union **protocomm_httpd_config_data_t**

#include <protocomm_httpd.h> Protocomm HTTPD Configuration Data

Public Members

void ***handle**

HTTP Server Handle, if ext_handle_provided is set to true

protocomm_http_server_config_t **config**

HTTP Server Configuration, if a server is not already active

Structures

struct **protocomm_http_server_config_t**

Config parameters for protocomm HTTP server.

Public Members

uint16_t **port**

Port on which the HTTP server will listen

size_t **stack_size**

Stack size of server task, adjusted depending upon stack usage of endpoint handler

unsigned **task_priority**

Priority of server task

struct **protocomm_httpd_config_t**

Config parameters for protocomm HTTP server.

Public Members

bool **ext_handle_provided**

Flag to indicate of an external HTTP Server Handle has been provided. In such as case, protocomm will use the same HTTP Server and not start a new one internally.

protocomm_httpd_config_data_t **data**

Protocomm HTTPD Configuration Data

Macros

PROTOCOMM_HTTPD_DEFAULT_CONFIG()

Header File

- components/protocomm/include/transports/protocomm_ble.h

Functions

esp_err_t **protocomm_ble_start**(*protocomm_t* *pc, const *protocomm_ble_config_t* *config)

Start Bluetooth Low Energy based transport layer for provisioning.

Initialize and start required BLE service for provisioning. This includes the initialization for characteristics/service for BLE.

Parameters

- **pc** –**[in]** Protocomm instance pointer obtained from protocomm_new()
- **config** –**[in]** Pointer to config structure for initializing BLE

Returns

- ESP_OK : Success
- ESP_FAIL : Simple BLE start error
- ESP_ERR_NO_MEM : Error allocating memory for internal resources
- ESP_ERR_INVALID_STATE : Error in ble config
- ESP_ERR_INVALID_ARG : Null arguments

esp_err_t **protocomm_ble_stop**(*protocomm_t* *pc)

Stop Bluetooth Low Energy based transport layer for provisioning.

Stops service/task responsible for BLE based interactions for provisioning

---

Note: You might want to optionally reclaim memory from Bluetooth. Refer to the documentation of `esp_bt_mem_release` in that case.

Parameters **pc** –**[in]** Same protocomm instance that was passed to protocomm_ble_start()

Returns

- ESP_OK : Success
- ESP_FAIL : Simple BLE stop error
- ESP_ERR_INVALID_ARG : Null / incorrect protocomm instance

Structures

struct **name_uuid**

This structure maps handler required by protocomm layer to UUIDs which are used to uniquely identify BLE characteristics from a smartphone or a similar client device.

Public Members

const char ***name**

Name of the handler, which is passed to protocomm layer

uint16_t **uuid**

UUID to be assigned to the BLE characteristic which is mapped to the handler

struct **protocomm_ble_config**

Config parameters for protocomm BLE service.

Public Members

char **device_name**[29 + 1]

BLE device name being broadcast at the time of provisioning

uint8_t **service_uuid**[16]

128 bit UUID of the provisioning service

uint8_t ***manufacturer_data**

BLE device manufacturer data pointer in advertisement

ssize_t **manufacturer_data_len**

BLE device manufacturer data length in advertisement

ssize_t **nu_lookup_count**

Number of entries in the Name-UUID lookup table

protocomm_ble_name_uuid_t ***nu_lookup**

Pointer to the Name-UUID lookup table

unsigned **ble_bonding**

BLE bonding

unsigned **ble_sm_sc**

BLE security flag

Macros

MAX_BLE_DEVNAME_LEN

BLE device name cannot be larger than this value 31 bytes (max scan response size) - 1 byte (length) - 1 byte (type) = 29 bytes

BLE_UUID128_VAL_LENGTH

MAX_BLE_MANUFACTURER_DATA_LEN

Theoretically, the limit for max manufacturer length remains same as BLE device name i.e. 31 bytes (max scan response size) - 1 byte (length) - 1 byte (type) = 29 bytes However, manufacturer data goes along with BLE device name in scan response. So, it is important to understand the actual length should be smaller than (29 - (BLE device name length) - 2).

Type Definitions

typedef struct *name_uuid* **protocomm_ble_name_uuid_t**

This structure maps handler required by protocomm layer to UUIDs which are used to uniquely identify BLE characteristics from a smartphone or a similar client device.

typedef struct *protocomm_ble_config* **protocomm_ble_config_t**

Config parameters for protocomm BLE service.

2.5.2 Unified Provisioning

Overview

Unified provisioning support in the ESP-IDF provides an extensible mechanism to the developers to configure the device with the Wi-Fi credentials and/or other custom configuration using various transports and different security schemes. Depending on the use-case it provides a complete and ready solution for Wi-Fi network provisioning along with example iOS and Android applications. Or developers can extend the device-side and phone-app side implementations to accommodate their requirements for sending additional configuration data. Following are the important features of this implementation.

1. *Extensible Protocol:* The protocol is completely flexible and it offers the ability for the developers to send custom configuration in the provisioning process. The data representation too is left to the application to decide.
2. *Transport Flexibility:* The protocol can work on Wi-Fi (SoftAP + HTTP server) or on BLE as a transport protocol. The framework provides an ability to add support for any other transport easily as long as command-response behaviour can be supported on the transport.
3. *Security Scheme Flexibility:* It's understood that each use-case may require different security scheme to secure the data that is exchanged in the provisioning process. Some applications may work with SoftAP that's WPA2 protected or BLE with "just-works" security. Or the applications may consider the transport to be insecure and may want application level security. The unified provisioning framework allows application to choose the security as deemed suitable.

4. *Compact Data Representation:* The protocol uses Google Protobufs as a data representation for session setup and Wi-Fi provisioning. They provide a compact data representation and ability to parse the data in multiple programming languages in native format. Please note that this data representation is not forced on application specific data and the developers may choose the representation of their choice.

Typical Provisioning Process

Deciding on Transport

Unified provisioning subsystem supports Wi-Fi (SoftAP+HTTP server) and BLE (GATT based) transport schemes. Following points need to be considered while selecting the best possible transport for provisioning.

1. BLE based transport has an advantage that in the provisioning process, the BLE communication channel stays intact between the device and the client. That provides reliable provisioning feedback.
2. BLE based provisioning implementation makes the user-experience better from the phone apps as on Android and iOS both, the phone app can discover and connect to the device without requiring user to go out of the phone app
3. BLE transport however consumes ~110KB memory at runtime. If the product does not use the BLE or BT functionality after provisioning is done, almost all the memory can be reclaimed back and can be added into the heap.
4. SoftAP based transport is highly interoperable; however as the same radio is shared between SoftAP and Station interface, the transport is not reliable in the phase when the Wi-Fi connection to external AP is attempted. Also, the client may roam back to different network when the SoftAP changes the channel at the time of Station connection.
5. SoftAP transport does not require much additional memory for the Wi-Fi use-cases
6. SoftAP based provisioning requires the phone app user to go to "System Settings" to connect to Wi-Fi network hosted by the device in case of iOS. The discovery (scanning) as well as connection API is not available for the iOS applications.

Deciding on Security

Depending on the transport and other constraints the security scheme needs to be selected by the application developers. Following considerations need to be given from the provisioning security perspective: 1. The configuration data sent from the client to the device and the response has to be secured. 2. The client should authenticate the device it is connected to. 3. The device manufacturer may choose proof-of-possession - a unique per device secret to be entered on the provisioning client as a security measure to make sure that the user can provisions the device in the possession.

There are two levels of security schemes. The developer may select one or combination depending on requirements.

1. *Transport Security:* SoftAP provisioning may choose WPA2 protected security with unique per-device passphrase. Per-device unique passphrase can also act as a proof-of-possession. For BLE, "just-works" security can be used as a transport level security after understanding the level of security it provides.
2. *Application Security:* The unified provisioning subsystem provides application level security (*security1*) that provides data protection and authentication (through proof-of-possession) if the application does not use the transport level security or if the transport level security is not sufficient for the use-case.

Device Discovery

The advertisement and device discovery is left to the application and depending on the protocol chosen, the phone apps and device firmware application can choose appropriate method to advertise and discovery.

For the SoftAP+HTTP transport, typically the SSID (network name) of the AP hosted by the device can be used for discovery.

For the BLE transport device name or primary service included in the advertisement or combination of both can be used for discovery.

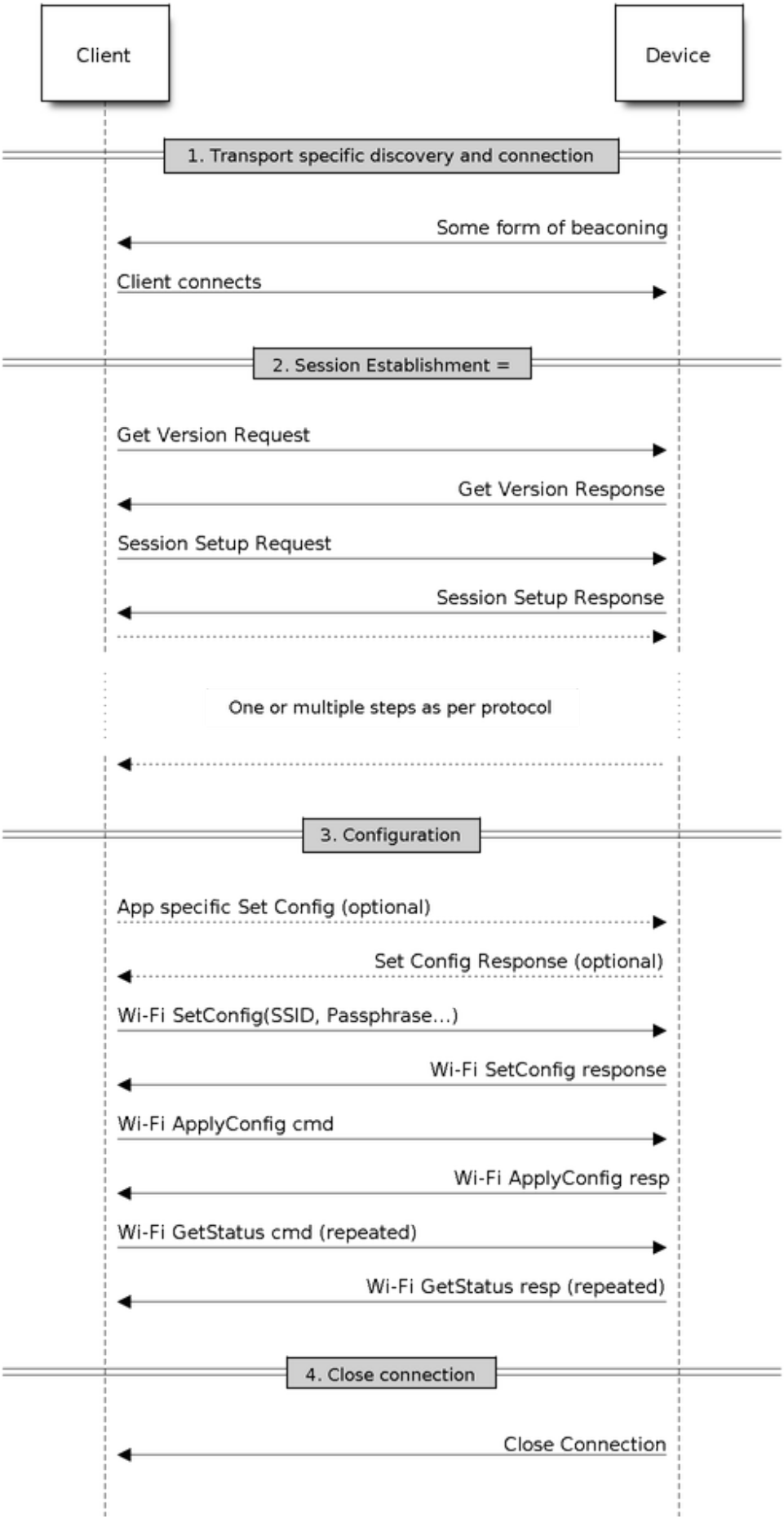

Fig. 28: Typical Provisioning Process

Architecture

The below diagram shows architecture of unified provisioning.

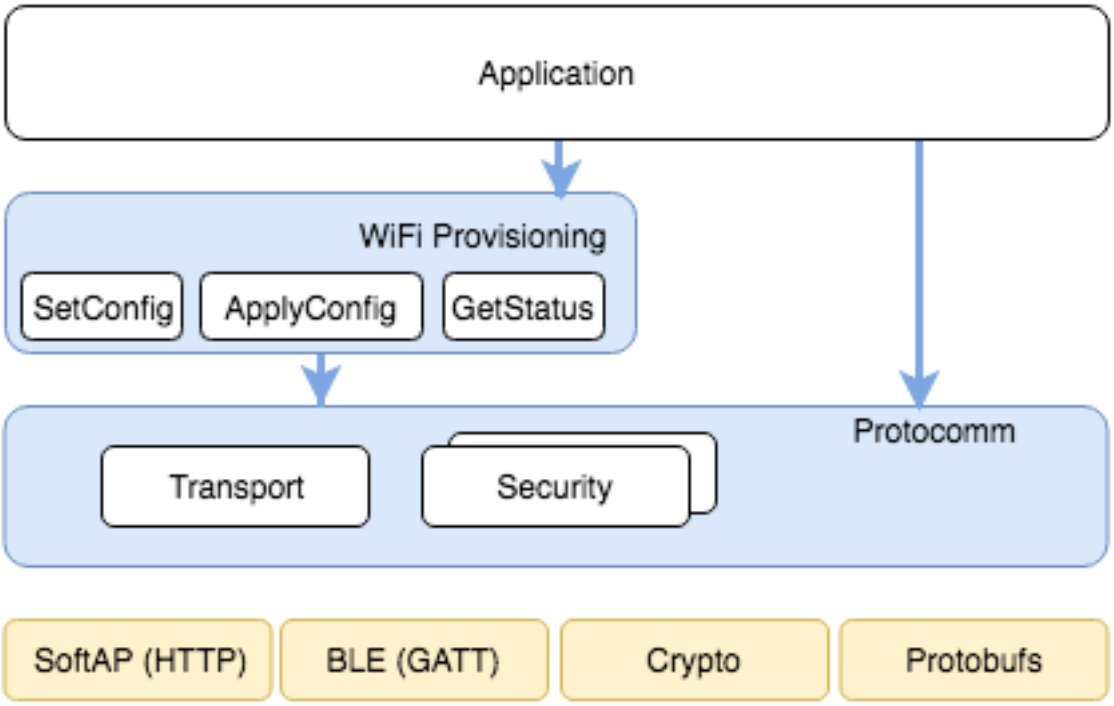

Fig. 29: Unified Provisioning Architecture

It relies on the base layer called *Protocol Communication* (Protocol Communication) which provides a framework for security schemes and transport mechanisms. Wi-Fi Provisioning layer uses Protocomm to provide simple callbacks to the application for setting the configuration and getting the Wi-Fi status. The application has control over implementation of these callbacks. In addition application can directly use protocomm to register custom handlers.

Application creates a protocomm instance which is mapped to a specific transport and specific security scheme. Each transport in the protocomm has a concept of an "end-point" which corresponds to logical channel for communication for specific type of information. For example security handshake happens on a different endpoint than the Wi-Fi configuration endpoint. Each end-point is identified using a string and depending on the transport internal representation of the end-point changes. In case of SoftAP+HTTP transport the end-point corresponds to URI whereas in case of BLE the end-point corresponds to GATT characteristic with specific UUID. Developers can create custom end-points and implement handler for the data that is received or sent over the same end-point.

Security Schemes

At present unified provisioning supports two security schemes: 1. Security0 - No security (No encryption) 2. Security1 - Curve25519 based key exchange, shared key derivation and AES256-CTR mode encryption of the data. It supports two modes :

a. Authorized - Proof of Possession (PoP) string used to authorize session and derive shared key
b. No Auth (Null PoP) - Shared key derived through key exchange only

Security1 scheme details are shown in the below sequence diagram

Sample Code

Please refer to *Protocol Communication* and *Wi-Fi Provisioning* for API guides and code snippets on example usage.

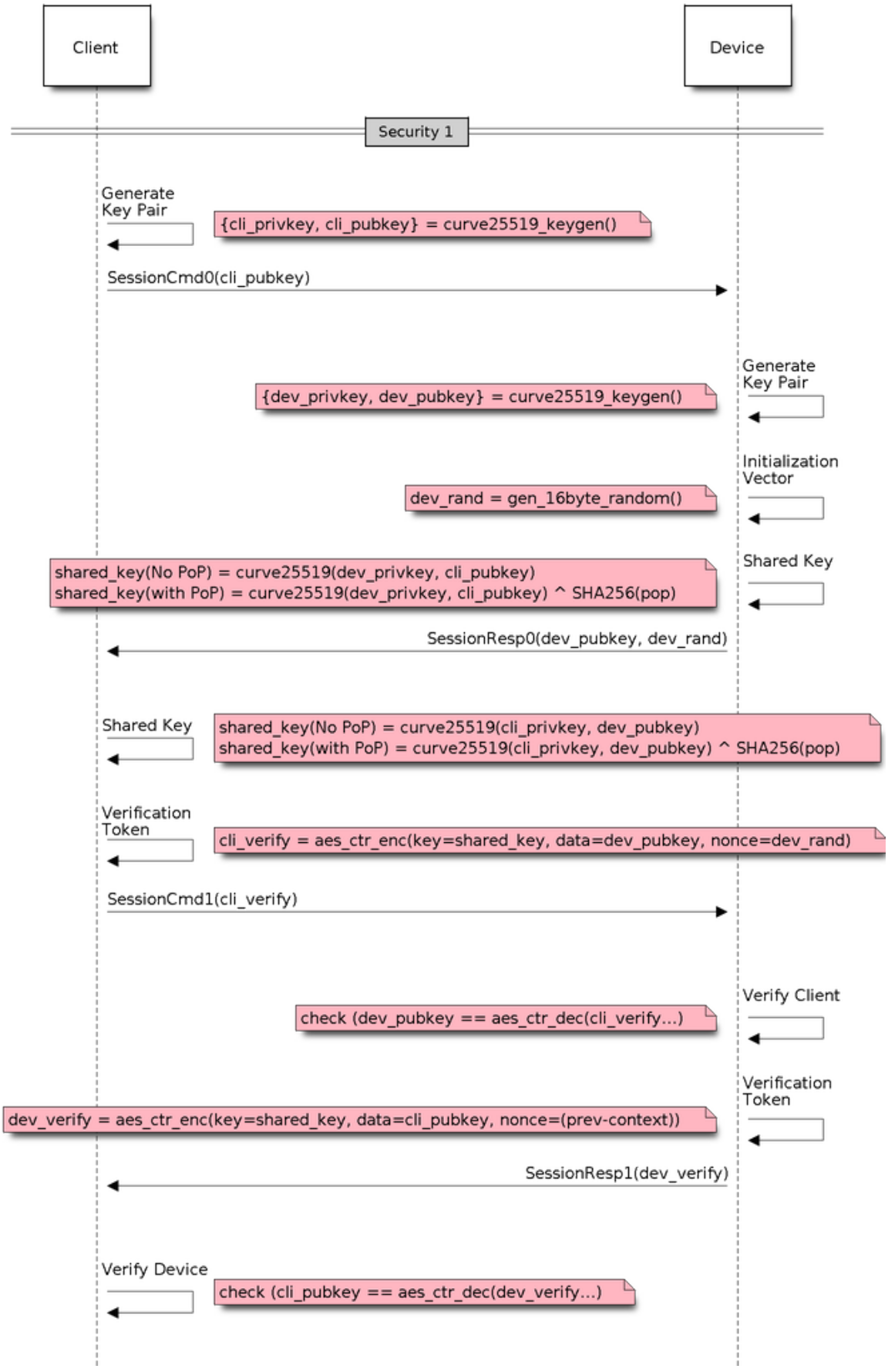

Fig. 30: Security1

Application implementation can be found as an example under provisioning.

Provisioning Tools

Provisioning applications are available for various platforms, along with source code:

- **Android:**
  - BLE Provisioning app on Play Store.
  - SoftAP Provisioning app on Play Store.
  - Source code on GitHub: esp-idf-provisioning-android.
- **iOS:**
  - BLE Provisioning app on app store.
  - SoftAP Provisioning app on app Store.
  - Source code on GitHub: esp-idf-provisioning-ios.
- Linux/MacOS/Windows : tools/esp_prov (a python based command line tool for provisioning)

The phone applications offer simple UI and thus more user centric, while the command line application is useful as a debugging tool for developers.

2.5.3 Wi-Fi Provisioning

Overview

This component provides APIs that control Wi-Fi provisioning service for receiving and configuring Wi-Fi credentials over SoftAP or BLE transport via secure *Protocol Communication (protocomm)* sessions. The set of `wifi_prov_mgr_` APIs help in quickly implementing a provisioning service having necessary features with minimal amount of code and sufficient flexibility.

Initialization *`wifi_prov_mgr_init()`* is called to configure and initialize the provisioning manager and thus this must be called prior to invoking any other `wifi_prov_mgr_` APIs. Note that the manager relies on other components of IDF, namely NVS, TCP/IP, Event Loop and Wi-Fi (and optionally mDNS), hence these must be initialized beforehand. The manager can be de-initialized at any moment by making a call to *`wifi_prov_mgr_deinit()`*.

```
wifi_prov_mgr_config_t config = {
    .scheme = wifi_prov_scheme_ble,
    .scheme_event_handler = WIFI_PROV_SCHEME_BLE_EVENT_HANDLER_FREE_BTDM
};

ESP_ERROR_CHECK( wifi_prov_mgr_init(config) );
```

The configuration structure `wifi_prov_mgr_config_t` has a few fields to specify the behavior desired of the manager :

- *scheme* : This is used to specify the provisioning scheme. Each scheme corresponds to one of the modes of transport supported by protocomm. Hence, we have three options :
  - `wifi_prov_scheme_ble` : BLE transport and GATT Server for handling provisioning commands
  - `wifi_prov_scheme_softap` : Wi-Fi SoftAP transport and HTTP Server for handling provisioning commands
  - `wifi_prov_scheme_console` : Serial transport and console for handling provisioning commands
- *scheme_event_handler* : An event handler defined along with scheme. Choosing appropriate scheme specific event handler allows the manager to take care of certain matters automatically. Presently this is not used for either SoftAP or Console based provisioning, but is very convenient for BLE. To understand how, we must recall that Bluetooth requires quite some amount of memory to function and once provisioning is finished, the main application may want to reclaim back this memory (or part of it, if it needs to use either BLE or classic BT). Also, upon every future reboot of a provisioned device, this reclamation of memory needs to be performed again. To reduce

this complication in using `wifi_prov_scheme_ble`, the scheme specific handlers have been defined, and depending upon the chosen handler, the BLE / classic BT / BTDM memory will be freed automatically when the provisioning manager is de-initialized. The available options are:

  - `WIFI_PROV_SCHEME_BLE_EVENT_HANDLER_FREE_BTDM` - Free both classic BT and BLE (BTDM) memory. Used when main application doesn't require Bluetooth at all.
  - `WIFI_PROV_SCHEME_BLE_EVENT_HANDLER_FREE_BLE` - Free only BLE memory. Used when main application requires classic BT.
  - `WIFI_PROV_SCHEME_BLE_EVENT_HANDLER_FREE_BT` - Free only classic BT. Used when main application requires BLE. In this case freeing happens right when the manager is initialized.
  - `WIFI_PROV_EVENT_HANDLER_NONE` - Don't use any scheme specific handler. Used when provisioning scheme is not BLE (i.e. SoftAP or Console), or when main application wants to handle the memory reclaiming on its own, or needs both BLE and classic BT to function.

- *app_event_handler* (Deprecated) : It is now recommended to catch `WIFI_PROV_EVENT``s that are emitted to the default event loop handler. See definition of ``wifi_prov_cb_event_t` for the list of events that are generated by the provisioning service. Here is an excerpt showing some of the provisioning events:

```
static void event_handler(void* arg, esp_event_base_t event_base,
                          int event_id, void* event_data)
{
    if (event_base == WIFI_PROV_EVENT) {
        switch (event_id) {
            case WIFI_PROV_START:
                ESP_LOGI(TAG, "Provisioning started");
                break;
            case WIFI_PROV_CRED_RECV: {
                wifi_sta_config_t *wifi_sta_cfg = (wifi_sta_config_t␣
↪*)event_data;
                ESP_LOGI(TAG, "Received Wi-Fi credentials"
                         "\n\tSSID     : %s\n\tPassword : %s",
                         (const char *) wifi_sta_cfg->ssid,
                         (const char *) wifi_sta_cfg->password);
                break;
            }
            case WIFI_PROV_CRED_FAIL: {
                wifi_prov_sta_fail_reason_t *reason = (wifi_prov_sta_fail_
↪reason_t *)event_data;
                ESP_LOGE(TAG, "Provisioning failed!\n\tReason : %s"
                         "\n\tPlease reset to factory and retry␣
↪provisioning",
                         (*reason == WIFI_PROV_STA_AUTH_ERROR) ?
                         "Wi-Fi station authentication failed" : "Wi-Fi␣
↪access-point not found");
                break;
            }
            case WIFI_PROV_CRED_SUCCESS:
                ESP_LOGI(TAG, "Provisioning successful");
                break;
            case WIFI_PROV_END:
                /* De-initialize manager once provisioning is finished */
                wifi_prov_mgr_deinit();
                break;
            default:
                break;
        }
    }
}
```

The manager can be de-initialized at any moment by making a call to *wifi_prov_mgr_deinit()*.

Check Provisioning State Whether device is provisioned or not can be checked at runtime by calling *wifi_prov_mgr_is_provisioned()*. This internally checks if the Wi-Fi credentials are stored in NVS.

Note that presently manager does not have its own NVS namespace for storage of Wi-Fi credentials, instead it relies on the esp_wifi_ APIs to set and get the credentials stored in NVS from the default location.

If provisioning state needs to be reset, any of the following approaches may be taken :

- the associated part of NVS partition has to be erased manually
- main application must implement some logic to call esp_wifi_ APIs for erasing the credentials at runtime
- main application must implement some logic to force start the provisioning irrespective of the provisioning state

```
bool provisioned = false;
ESP_ERROR_CHECK( wifi_prov_mgr_is_provisioned(&provisioned) );
```

Start Provisioning Service At the time of starting provisioning we need to specify a service name and the corresponding key. These translate to :

- Wi-Fi SoftAP SSID and passphrase, respectively, when scheme is wifi_prov_scheme_softap
- BLE Device name (service key is ignored) when scheme is wifi_prov_scheme_ble

Also, since internally the manager uses *protocomm*, we have the option of choosing one of the security features provided by it :

- Security 1 is secure communication which consists of a prior handshake involving X25519 key exchange along with authentication using a proof of possession (*pop*), followed by AES-CTR for encryption/decryption of subsequent messages
- Security 0 is simply plain text communication. In this case the *pop* is simply ignored

See *Provisioning* for details about the security features.

```
const char *service_name = "my_device";
const char *service_key  = "password";

wifi_prov_security_t security = WIFI_PROV_SECURITY_1;
const char *pop = "abcd1234";

ESP_ERROR_CHECK( wifi_prov_mgr_start_provisioning(security, pop, service_
↪name, service_key) );
```

The provisioning service will automatically finish only if it receives valid Wi-Fi AP credentials followed by successfully connection of device to the AP (IP obtained). Regardless of that, the provisioning service can be stopped at any moment by making a call to *wifi_prov_mgr_stop_provisioning()*.

Note: If the device fails to connect with the provided credentials, it won't accept new credentials anymore, but the provisioning service will keep on running (only to convey failure to the client), until the device is restarted. Upon restart the provisioning state will turn out to be true this time (as credentials will be found in NVS), but device will again fail to connect with those same credentials (unless an AP with the matching credentials somehow does become available). This situation can be fixed by resetting the credentials in NVS or force starting the provisioning service. This has been explained above in *Check Provisioning State*.

Waiting For Completion Typically, the main application will wait for the provisioning to finish, then de-initialize the manager to free up resources and finally start executing its own logic.

There are two ways for making this possible. The simpler way is to use a blocking call to *wifi_prov_mgr_wait()*.

```
// Start provisioning service
ESP_ERROR_CHECK( wifi_prov_mgr_start_provisioning(security, pop, service_
↪name, service_key) );

// Wait for service to complete
wifi_prov_mgr_wait();

// Finally de-initialize the manager
wifi_prov_mgr_deinit();
```

The other way is to use the default event loop handler to catch `WIFI_PROV_EVENT``s and call :cpp:func:`wifi_prov_mgr_deinit()` when event ID is ``WIFI_PROV_END:

```
static void event_handler(void* arg, esp_event_base_t event_base,
                          int event_id, void* event_data)
{
    if (event_base == WIFI_PROV_EVENT && event_id == WIFI_PROV_END) {
        /* De-initialize manager once provisioning is finished */
        wifi_prov_mgr_deinit();
    }
}
```

User Side Implementation When the service is started, the device to be provisioned is identified by the advertised service name which, depending upon the selected transport, is either the BLE device name or the SoftAP SSID.

When using SoftAP transport, for allowing service discovery, mDNS must be initialized before starting provisioning. In this case the hostname set by the main application is used, and the service type is internally set to *_esp_wifi_prov*.

When using BLE transport, a custom 128 bit UUID should be set using *wifi_prov_scheme_ble_set_service_uuid()*. This UUID will be included in the BLE advertisement and will correspond to the primary GATT service that provides provisioning endpoints as GATT characteristics. Each GATT characteristic will be formed using the primary service UUID as base, with different auto assigned 12th and 13th bytes (assume counting starts from 0th byte). Since, an endpoint characteristic UUID is auto assigned, it shouldn't be used to identify the endpoint. Instead, client side applications should identify the endpoints by reading the User Characteristic Description (0x2901) descriptor for each characteristic, which contains the endpoint name of the characteristic. For example, if the service UUID is set to *55cc035e-fb27-4f80-be02-3c60828b7451*, each endpoint characteristic will be assigned a UUID like *55cc____-fb27-4f80-be02-3c60828b7451*, with unique values at the 12th and 13th bytes.

Once connected to the device, the provisioning related protocomm endpoints can be identified as follows :

Table 13: Endpoints provided by Provisioning Service

Endpoint Name (BLE + GATT Server)	URI (SoftAP + HTTP Server + mDNS)	Description
prov-session	http://<mdns-hostname>.local/prov-session	Security endpoint used for session establishment
prov-scan	http://wifi-prov.local/prov-scan	Endpoint used for starting Wi-Fi scan and receiving scan results
prov-config	http://<mdns-hostname>.local/prov-config	Endpoint used for configuring Wi-Fi credentials on device
proto-ver	http://<mdns-hostname>.local/proto-ver	Endpoint for retrieving version info

Immediately after connecting, the client application may fetch the version / capabilities information from the *proto-ver* endpoint. All communications to this endpoint are un-encrypted, hence necessary information (that may be relevant for deciding compatibility) can be retrieved before establishing a secure session. The response is in JSON format

and looks like : `prov: { ver: v1.1, cap: [no_pop] }, my_app: { ver: 1.345, cap: [cloud, local_ctrl] },.....` Here label *prov* provides provisioning service version (*ver*) and capabilities (*cap*). For now, only *no_pop* capability is supported, which indicates that the service doesn't require proof of possession for authentication. Any application related version / capabilities will be given by other labels (like *my_app* in this example). These additional fields are set using `wifi_prov_mgr_set_app_info()`.

User side applications need to implement the signature handshaking required for establishing and authenticating secure protocomm sessions as per the security scheme configured for use (this is not needed when manager is configured to use protocomm security 0).

See Unified Provisioning for more details about the secure handshake and encryption used. Applications must use the *.proto* files found under protocomm/proto, which define the Protobuf message structures supported by *prov-session* endpoint.

Once a session is established, Wi-Fi credentials are configured using the following set of *wifi_config* commands, serialized as Protobuf messages (the corresponding *.proto* files can be found under wifi_provisioning/proto) :

- *get_status* - For querying the Wi-Fi connection status. The device will respond with a status which will be one of connecting / connected / disconnected. If status is disconnected, a disconnection reason will also be included in the status response.
- *set_config* - For setting the Wi-Fi connection credentials
- *apply_config* - For applying the credentials saved during *set_config* and start the Wi-Fi station

After session establishment, client can also request Wi-Fi scan results from the device. The results returned is a list of AP SSIDs, sorted in descending order of signal strength. This allows client applications to display APs nearby to the device at the time of provisioning, and users can select one of the SSIDs and provide the password which is then sent using the *wifi_config* commands described above. The *wifi_scan* endpoint supports the following protobuf commands :

- *scan_start* - For starting Wi-Fi scan with various options :
  - *blocking* (input) - If true, the command returns only when the scanning is finished
  - *passive* (input) - If true scan is started in passive mode (this may be slower) instead of active mode
  - *group_channels* (input) - This specifies whether to scan all channels in one go (when zero) or perform scanning of channels in groups, with 120ms delay between scanning of consecutive groups, and the value of this parameter sets the number of channels in each group. This is useful when transport mode is SoftAP, where scanning all channels in one go may not give the Wi-Fi driver enough time to send out beacons, and hence may cause disconnection with any connected stations. When scanning in groups, the manager will wait for atleast 120ms after completing scan on a group of channels, and thus allow the driver to send out the beacons. For example, given that the total number of Wi-Fi channels is 14, then setting group_channels to 4, will create 5 groups, with each group having 3 channels, except the last one which will have 14 % 3 = 2 channels. So, when scan is started, the first 3 channels will be scanned, followed by a 120ms delay, and then the next 3 channels, and so on, until all the 14 channels have been scanned. One may need to adjust this parameter as having only few channels in a group may slow down the overall scan time, while having too many may again cause disconnection. Usually a value of 4 should work for most cases. Note that for any other mode of transport, e.g. BLE, this can be safely set to 0, and hence achieve the fastest overall scanning time.
  - *period_ms* (input) - Scan parameter specifying how long to wait on each channel
- *scan_status* - Gives the status of scanning process :
  - *scan_finished* (output) - When scan has finished this returns true
  - *result_count* (output) - This gives the total number of results obtained till now. If scan is yet happening this number will keep on updating
- *scan_result* - For fetching scan results. This can be called even if scan is still on going
  - *start_index* (input) - Starting index from where to fetch the entries from the results list
  - *count* (input) - Number of entries to fetch from the starting index
  - *entries* (output) - List of entries returned. Each entry consists of *ssid*, *channel* and *rssi* information

Additional Endpoints In case users want to have some additional protocomm endpoints customized to their requirements, this is done in two steps. First is creation of an endpoint with a specific name, and the second step is the registration of a handler for this endpoint. See *protocomm* for the function signature of an endpoint handler. A custom endpoint must be created after initialization and before starting the provisioning service. Whereas, the

protocomm handler is registered for this endpoint only after starting the provisioning service.

```
wifi_prov_mgr_init(config);
wifi_prov_mgr_endpoint_create("custom-endpoint");
wifi_prov_mgr_start_provisioning(security, pop, service_name, service_
↪key);
wifi_prov_mgr_endpoint_register("custom-endpoint", custom_ep_handler,␣
↪custom_ep_data);
```

When the provisioning service stops, the endpoint is unregistered automatically.

One can also choose to call *wifi_prov_mgr_endpoint_unregister()* to manually deactivate an endpoint at runtime. This can also be used to deactivate the internal endpoints used by the provisioning service.

When / How To Stop Provisioning Service? The default behavior is that once the device successfully connects using the Wi-Fi credentials set by the *apply_config* command, the provisioning service will be stopped (and BLE / SoftAP turned off) automatically after responding to the next *get_status* command. If *get_status* command is not received by the device, the service will be stopped after a 30s timeout.

On the other hand, if device was not able to connect using the provided Wi-Fi credentials, due to incorrect SSID / passphrase, the service will keep running, and *get_status* will keep responding with disconnected status and reason for disconnection. Any further attempts to provide another set of Wi-Fi credentials, will be rejected. These credentials will be preserved, unless the provisioning service is force started, or NVS erased.

If this default behavior is not desired, it can be disabled by calling *wifi_prov_mgr_disable_auto_stop()*. Now the provisioning service will only be stopped after an explicit call to *wifi_prov_mgr_stop_provisioning()*, which returns immediately after scheduling a task for stopping the service. The service stops after a certain delay and WIFI_PROV_END event gets emitted. This delay is specified by the argument to *wifi_prov_mgr_disable_auto_stop()*.

The customized behavior is useful for applications which want the provisioning service to be stopped some time after the Wi-Fi connection is successfully established. For example, if the application requires the device to connect to some cloud service and obtain another set of credentials, and exchange this credentials over a custom protocomm endpoint, then after successfully doing so stop the provisioning service by calling *wifi_prov_mgr_stop_provisioning()* inside the protocomm handler itself. The right amount of delay ensures that the transport resources are freed only after the response from the protocomm handler reaches the client side application.

Application Examples

For complete example implementation see provisioning/wifi_prov_mgr

Provisioning Tools

Provisioning applications are available for various platforms, along with source code:

- **Android:**
  - BLE Provisioning app on Play Store.
  - SoftAP Provisioning app on Play Store.
  - Source code on GitHub: esp-idf-provisioning-android.
- **iOS:**
  - BLE Provisioning app on app store.
  - SoftAP Provisioning app on app Store.
  - Source code on GitHub: esp-idf-provisioning-ios.
- Linux/MacOS/Windows : tools/esp_prov (a python based command line tool for provisioning)

The phone applications offer simple UI and thus more user centric, while the command line application is useful as a debugging tool for developers.

API Reference

Header File

- components/wifi_provisioning/include/wifi_provisioning/manager.h

Functions

esp_err_t **wifi_prov_mgr_init** (*wifi_prov_mgr_config_t* config)

Initialize provisioning manager instance.

Configures the manager and allocates internal resources

Configuration specifies the provisioning scheme (transport) and event handlers

Event WIFI_PROV_INIT is emitted right after initialization is complete

Parameters **config** –**[in]** Configuration structure

Returns

- ESP_OK : Success
- ESP_FAIL : Fail

void **wifi_prov_mgr_deinit** (void)

Stop provisioning (if running) and release resource used by the manager.

Event WIFI_PROV_DEINIT is emitted right after de-initialization is finished

If provisioning service is still active when this API is called, it first stops the service, hence emitting WIFI_PROV_END, and then performs the de-initialization

esp_err_t **wifi_prov_mgr_is_provisioned** (bool *provisioned)

Checks if device is provisioned.

This checks if Wi-Fi credentials are present on the NVS

The Wi-Fi credentials are assumed to be kept in the same NVS namespace as used by esp_wifi component

If one were to call esp_wifi_set_config() directly instead of going through the provisioning process, this function will still yield true (i.e. device will be found to be provisioned)

Note: Calling wifi_prov_mgr_start_provisioning() automatically resets the provision state, irrespective of what the state was prior to making the call.

Parameters **provisioned** –**[out]** True if provisioned, else false

Returns

- ESP_OK : Retrieved provision state successfully
- ESP_FAIL : Wi-Fi not initialized
- ESP_ERR_INVALID_ARG : Null argument supplied
- ESP_ERR_INVALID_STATE : Manager not initialized

esp_err_t **wifi_prov_mgr_start_provisioning** (*wifi_prov_security_t* security, const char *pop, const char *service_name, const char *service_key)

Start provisioning service.

This starts the provisioning service according to the scheme configured at the time of initialization. For scheme :

- wifi_prov_scheme_ble : This starts protocomm_ble, which internally initializes BLE transport and starts GATT server for handling provisioning requests
- wifi_prov_scheme_softap : This activates SoftAP mode of Wi-Fi and starts protocomm_httpd, which internally starts an HTTP server for handling provisioning requests (If mDNS is active it also starts advertising service with type _esp_wifi_prov._tcp)

Event WIFI_PROV_START is emitted right after provisioning starts without failure

---

Note: This API will start provisioning service even if device is found to be already provisioned, i.e. wifi_prov_mgr_is_provisioned() yields true

---

Parameters

- **`security`** –**[in]** Specify which protocomm security scheme to use :
  - WIFI_PROV_SECURITY_0 : For no security
  - WIFI_PROV_SECURITY_1 : x25519 secure handshake for session establishment followed by AES-CTR encryption of provisioning messages
- **`pop`** –**[in]** Pointer to proof of possession string (NULL if not needed). This is relevant only for protocomm security 1, in which case it is used for authenticating secure session
- **`service_name`** –**[in]** Unique name of the service. This translates to:
  - Wi-Fi SSID when provisioning mode is softAP
  - Device name when provisioning mode is BLE
- **`service_key`** –**[in]** Key required by client to access the service (NULL if not needed). This translates to:
  - Wi-Fi password when provisioning mode is softAP
  - ignored when provisioning mode is BLE

Returns

- ESP_OK : Provisioning started successfully
- ESP_FAIL : Failed to start provisioning service
- ESP_ERR_INVALID_STATE : Provisioning manager not initialized or already started

void **`wifi_prov_mgr_stop_provisioning`**(void)

Stop provisioning service.

If provisioning service is active, this API will initiate a process to stop the service and return. Once the service actually stops, the event WIFI_PROV_END will be emitted.

If wifi_prov_mgr_deinit() is called without calling this API first, it will automatically stop the provisioning service and emit the WIFI_PROV_END, followed by WIFI_PROV_DEINIT, before returning.

This API will generally be used along with wifi_prov_mgr_disable_auto_stop() in the scenario when the main application has registered its own endpoints, and wishes that the provisioning service is stopped only when some protocomm command from the client side application is received.

Calling this API inside an endpoint handler, with sufficient cleanup_delay, will allow the response / acknowledgment to be sent successfully before the underlying protocomm service is stopped.

Cleaup_delay is set when calling wifi_prov_mgr_disable_auto_stop(). If not specified, it defaults to 1000ms.

For straightforward cases, using this API is usually not necessary as provisioning is stopped automatically once WIFI_PROV_CRED_SUCCESS is emitted. Stopping is delayed (maximum 30 seconds) thus allowing the client side application to query for Wi-Fi state, i.e. after receiving the first query and sending `Wi-Fi state connected` response the service is stopped immediately.

void **`wifi_prov_mgr_wait`**(void)

Wait for provisioning service to finish.

Calling this API will block until provisioning service is stopped i.e. till event WIFI_PROV_END is emitted.

This will not block if provisioning is not started or not initialized.

esp_err_t **`wifi_prov_mgr_disable_auto_stop`**(uint32_t cleanup_delay)

Disable auto stopping of provisioning service upon completion.

By default, once provisioning is complete, the provisioning service is automatically stopped, and all endpoints (along with those registered by main application) are deactivated.

This API is useful in the case when main application wishes to close provisioning service only after it receives some protocomm command from the client side app. For example, after connecting to Wi-Fi, the device may

want to connect to the cloud, and only once that is successfully, the device is said to be fully configured. But, then it is upto the main application to explicitly call wifi_prov_mgr_stop_provisioning() later when the device is fully configured and the provisioning service is no longer required.

Note: This must be called before executing wifi_prov_mgr_start_provisioning()

Parameters **`cleanup_delay`** –**[in]** Sets the delay after which the actual cleanup of transport related resources is done after a call to wifi_prov_mgr_stop_provisioning() returns. Minimum allowed value is 100ms. If not specified, this will default to 1000ms.

Returns

- ESP_OK : Success
- ESP_ERR_INVALID_STATE : Manager not initialized or provisioning service already started

esp_err_t **`wifi_prov_mgr_set_app_info`**(const char *label, const char *version, const char **capabilities, size_t total_capabilities)

Set application version and capabilities in the JSON data returned by proto-ver endpoint.

This function can be called multiple times, to specify information about the various application specific services running on the device, identified by unique labels.

The provisioning service itself registers an entry in the JSON data, by the label "prov", containing only provisioning service version and capabilities. Application services should use a label other than "prov" so as not to overwrite this.

Note: This must be called before executing wifi_prov_mgr_start_provisioning()

Parameters

- **`label`** –**[in]** String indicating the application name.
- **`version`** –**[in]** String indicating the application version. There is no constraint on format.
- **`capabilities`** –**[in]** Array of strings with capabilities. These could be used by the client side app to know the application registered endpoint capabilities
- **`total_capabilities`** –**[in]** Size of capabilities array

Returns

- ESP_OK : Success
- ESP_ERR_INVALID_STATE : Manager not initialized or provisioning service already started
- ESP_ERR_NO_MEM : Failed to allocate memory for version string
- ESP_ERR_INVALID_ARG : Null argument

esp_err_t **`wifi_prov_mgr_endpoint_create`**(const char *ep_name)

Create an additional endpoint and allocate internal resources for it.

This API is to be called by the application if it wants to create an additional endpoint. All additional endpoints will be assigned UUIDs starting from 0xFF54 and so on in the order of execution.

protocomm handler for the created endpoint is to be registered later using wifi_prov_mgr_endpoint_register() after provisioning has started.

Note: This API can only be called BEFORE provisioning is started

---

Note: Additional endpoints can be used for configuring client provided parameters other than Wi-Fi credentials, that are necessary for the main application and hence must be set prior to starting the application

---

Note: After session establishment, the additional endpoints must be targeted first by the client side application before sending Wi-Fi configuration, because once Wi-Fi configuration finishes the provisioning service is stopped and hence all endpoints are unregistered

Parameters **ep_name** –**[in]** unique name of the endpoint

Returns

- ESP_OK : Success
- ESP_FAIL : Failure

esp_err_t **wifi_prov_mgr_endpoint_register**(const char *ep_name, *protocomm_req_handler_t* handler, void *user_ctx)

Register a handler for the previously created endpoint.

This API can be called by the application to register a protocomm handler to any endpoint that was created using wifi_prov_mgr_endpoint_create().

Note: This API can only be called AFTER provisioning has started

Note: Additional endpoints can be used for configuring client provided parameters other than Wi-Fi credentials, that are necessary for the main application and hence must be set prior to starting the application

Note: After session establishment, the additional endpoints must be targeted first by the client side application before sending Wi-Fi configuration, because once Wi-Fi configuration finishes the provisioning service is stopped and hence all endpoints are unregistered

Parameters

- **ep_name** –**[in]** Name of the endpoint
- **handler** –**[in]** Endpoint handler function
- **user_ctx** –**[in]** User data

Returns

- ESP_OK : Success
- ESP_FAIL : Failure

void **wifi_prov_mgr_endpoint_unregister**(const char *ep_name)

Unregister the handler for an endpoint.

This API can be called if the application wants to selectively unregister the handler of an endpoint while the provisioning is still in progress.

All the endpoint handlers are unregistered automatically when the provisioning stops.

Parameters **ep_name** –**[in]** Name of the endpoint

esp_err_t **wifi_prov_mgr_event_handler**(void *ctx, *system_event_t* *event)

Event handler for provisioning manager.

This is called from the main event handler and controls the provisioning manager' s internal state machine depending on incoming Wi-Fi events

Note: : This function is DEPRECATED, because events are now handled internally using the event loop library, esp_event. Calling this will do nothing and simply return ESP_OK.

Parameters
- **ctx** –**[in]** Event context data
- **event** –**[in]** Event info

Returns
- ESP_OK : Event handled successfully

esp_err_t **wifi_prov_mgr_get_wifi_state**(*wifi_prov_sta_state_t* *state)

Get state of Wi-Fi Station during provisioning.

Parameters **state** –**[out]** Pointer to wifi_prov_sta_state_t variable to be filled

Returns
- ESP_OK : Successfully retrieved Wi-Fi state
- ESP_FAIL : Provisioning app not running

esp_err_t **wifi_prov_mgr_get_wifi_disconnect_reason**(*wifi_prov_sta_fail_reason_t* *reason)

Get reason code in case of Wi-Fi station disconnection during provisioning.

Parameters **reason** –**[out]** Pointer to wifi_prov_sta_fail_reason_t variable to be filled

Returns
- ESP_OK : Successfully retrieved Wi-Fi disconnect reason
- ESP_FAIL : Provisioning app not running

esp_err_t **wifi_prov_mgr_configure_sta**(*wifi_config_t* *wifi_cfg)

Runs Wi-Fi as Station with the supplied configuration.

Configures the Wi-Fi station mode to connect to the AP with SSID and password specified in config structure and sets Wi-Fi to run as station.

This is automatically called by provisioning service upon receiving new credentials.

If credentials are to be supplied to the manager via a different mode other than through protocomm, then this API needs to be called.

Event WIFI_PROV_CRED_RECV is emitted after credentials have been applied and Wi-Fi station started

Parameters **wifi_cfg** –**[in]** Pointer to Wi-Fi configuration structure

Returns
- ESP_OK : Wi-Fi configured and started successfully
- ESP_FAIL : Failed to set configuration

esp_err_t **wifi_prov_mgr_reset_provisioning**(void)

Reset Wi-Fi provisioning config.

Calling this API will restore WiFi stack persistent settings to default values.

Returns
- ESP_OK : Reset provisioning config successfully
- ESP_FAIL : Failed to reset provisioning config

esp_err_t **wifi_prov_mgr_reset_sm_state_on_failure**(void)

Reset internal state machine and clear provisioned credentials.

This API can be used to restart provisioning in case invalid credentials are entered.

Returns
- ESP_OK : Reset provisioning state machine successfully
- ESP_FAIL : Failed to reset provisioning state machine
- ESP_ERR_INVALID_STATE : Manager not initialized

Structures

struct **wifi_prov_event_handler_t**

Event handler that is used by the manager while provisioning service is active.

Public Members

wifi_prov_cb_func_t **event_cb**

Callback function to be executed on provisioning events

void ***user_data**

User context data to pass as parameter to callback function

struct **wifi_prov_scheme**

Structure for specifying the provisioning scheme to be followed by the manager.

Note: Ready to use schemes are available:

- wifi_prov_scheme_ble : for provisioning over BLE transport + GATT server
- wifi_prov_scheme_softap : for provisioning over SoftAP transport + HTTP server
- wifi_prov_scheme_console : for provisioning over Serial UART transport + Console (for debugging)

Public Members

esp_err_t (***prov_start**)(*protocomm_t* *pc, void *config)

Function which is to be called by the manager when it is to start the provisioning service associated with a protocomm instance and a scheme specific configuration

esp_err_t (***prov_stop**)(*protocomm_t* *pc)

Function which is to be called by the manager to stop the provisioning service previously associated with a protocomm instance

void *(***new_config**)(void)

Function which is to be called by the manager to generate a new configuration for the provisioning service, that is to be passed to *prov_start()*

void (***delete_config**)(void *config)

Function which is to be called by the manager to delete a configuration generated using *new_config()*

esp_err_t (***set_config_service**)(void *config, const char *service_name, const char *service_key)

Function which is to be called by the manager to set the service name and key values in the configuration structure

esp_err_t (***set_config_endpoint**)(void *config, const char *endpoint_name, uint16_t uuid)

Function which is to be called by the manager to set a protocomm endpoint with an identifying name and UUID in the configuration structure

wifi_mode_t **wifi_mode**

Sets mode of operation of Wi-Fi during provisioning This is set to :

- WIFI_MODE_APSTA for SoftAP transport
- WIFI_MODE_STA for BLE transport

struct **wifi_prov_mgr_config_t**

Structure for specifying the manager configuration.

Public Members

wifi_prov_scheme_t **scheme**

Provisioning scheme to use. Following schemes are already available:

- wifi_prov_scheme_ble : for provisioning over BLE transport + GATT server
- wifi_prov_scheme_softap : for provisioning over SoftAP transport + HTTP server + mDNS (optional)
- wifi_prov_scheme_console : for provisioning over Serial UART transport + Console (for debugging)

wifi_prov_event_handler_t **scheme_event_handler**

Event handler required by the scheme for incorporating scheme specific behavior while provisioning manager is running. Various options may be provided by the scheme for setting this field. Use WIFI_PROV_EVENT_HANDLER_NONE when not used. When using scheme wifi_prov_scheme_ble, the following options are available:

- WIFI_PROV_SCHEME_BLE_EVENT_HANDLER_FREE_BTDM
- WIFI_PROV_SCHEME_BLE_EVENT_HANDLER_FREE_BLE
- WIFI_PROV_SCHEME_BLE_EVENT_HANDLER_FREE_BT

wifi_prov_event_handler_t **app_event_handler**

Event handler that can be set for the purpose of incorporating application specific behavior. Use WIFI_PROV_EVENT_HANDLER_NONE when not used.

Macros

WIFI_PROV_EVENT_HANDLER_NONE

Event handler can be set to none if not used.

Type Definitions

typedef void (***wifi_prov_cb_func_t**)(void *user_data, *wifi_prov_cb_event_t* event, void *event_data)

typedef struct *wifi_prov_scheme* **wifi_prov_scheme_t**

Structure for specifying the provisioning scheme to be followed by the manager.

Note: Ready to use schemes are available:

- wifi_prov_scheme_ble : for provisioning over BLE transport + GATT server
- wifi_prov_scheme_softap : for provisioning over SoftAP transport + HTTP server
- wifi_prov_scheme_console : for provisioning over Serial UART transport + Console (for debugging)

---

typedef enum *wifi_prov_security* **wifi_prov_security_t**

Security modes supported by the Provisioning Manager.

These are same as the security modes provided by protocomm

Enumerations

enum **wifi_prov_cb_event_t**

Events generated by manager.

These events are generated in order of declaration and, for the stretch of time between initialization and deinitialization of the manager, each event is signaled only once

Values:

enumerator **WIFI_PROV_INIT**

Emitted when the manager is initialized

enumerator **WIFI_PROV_START**

Indicates that provisioning has started

enumerator **WIFI_PROV_CRED_RECV**

Emitted when Wi-Fi AP credentials are received via `protocomm` endpoint `wifi_config`. The event data in this case is a pointer to the corresponding *`wifi_sta_config_t`* structure

enumerator **WIFI_PROV_CRED_FAIL**

Emitted when device fails to connect to the AP of which the credentials were received earlier on event `WIFI_PROV_CRED_RECV`. The event data in this case is a pointer to the disconnection reason code with type `wifi_prov_sta_fail_reason_t`

enumerator **WIFI_PROV_CRED_SUCCESS**

Emitted when device successfully connects to the AP of which the credentials were received earlier on event `WIFI_PROV_CRED_RECV`

enumerator **WIFI_PROV_END**

Signals that provisioning service has stopped

enumerator **WIFI_PROV_DEINIT**

Signals that manager has been de-initialized

enum **wifi_prov_security**

Security modes supported by the Provisioning Manager.

These are same as the security modes provided by protocomm

Values:

enumerator **WIFI_PROV_SECURITY_0**

No security (plain-text communication)

enumerator **WIFI_PROV_SECURITY_1**

This secure communication mode consists of X25519 key exchange

- proof of possession (pop) based authentication
- AES-CTR encryption

Header File

- components/wifi_provisioning/include/wifi_provisioning/scheme_ble.h

Functions

void **wifi_prov_scheme_ble_event_cb_free_btdm**(void *user_data, *wifi_prov_cb_event_t* event, void *event_data)

void **wifi_prov_scheme_ble_event_cb_free_ble**(void *user_data, *wifi_prov_cb_event_t* event, void *event_data)

void **wifi_prov_scheme_ble_event_cb_free_bt**(void *user_data, *wifi_prov_cb_event_t* event, void *event_data)

esp_err_t **wifi_prov_scheme_ble_set_service_uuid**(uint8_t *uuid128)

Set the 128 bit GATT service UUID used for provisioning.

This API is used to override the default 128 bit provisioning service UUID, which is 0000ffff-0000-1000-8000-00805f9b34fb.

This must be called before starting provisioning, i.e. before making a call to wifi_prov_mgr_start_provisioning(), otherwise the default UUID will be used.

Note: The data being pointed to by the argument must be valid atleast till provisioning is started. Upon start, the manager will store an internal copy of this UUID, and this data can be freed or invalidated afterwords.

Parameters **uuid128** –**[in]** A custom 128 bit UUID

Returns

- ESP_OK : Success
- ESP_ERR_INVALID_ARG : Null argument

esp_err_t **wifi_prov_scheme_ble_set_mfg_data**(uint8_t *mfg_data, ssize_t mfg_data_len)

Set manufacturer specific data in scan response.

This must be called before starting provisioning, i.e. before making a call to wifi_prov_mgr_start_provisioning().

Note: It is important to understand that length of custom manufacturer data should be within limits. The manufacturer data goes into scan response along with BLE device name. By default, BLE device name length is of 11 Bytes, however it can vary as per application use case. So, one has to honour the scan response data size limits i.e. (mfg_data_len + 2) < 31 - (device_name_length + 2). If the mfg_data length exceeds this limit, the length will be truncated.

Parameters

- **mfg_data** –**[in]** Custom manufacturer data
- **mfg_data_len** –**[in]** Manufacturer data length

Returns

- ESP_OK : Success
- ESP_ERR_INVALID_ARG : Null argument

Macros

WIFI_PROV_SCHEME_BLE_EVENT_HANDLER_FREE_BTDM

WIFI_PROV_SCHEME_BLE_EVENT_HANDLER_FREE_BLE

WIFI_PROV_SCHEME_BLE_EVENT_HANDLER_FREE_BT

Header File

- components/wifi_provisioning/include/wifi_provisioning/scheme_softap.h

Functions

void **wifi_prov_scheme_softap_set_httpd_handle**(void *handle)

Provide HTTPD Server handle externally.

Useful in cases wherein applications need the webserver for some different operations, and do not want the wifi provisioning component to start/stop a new instance.

Note: This API should be called before wifi_prov_mgr_start_provisioning()

Parameters **handle** –**[in]** Handle to HTTPD server instance

Header File

- components/wifi_provisioning/include/wifi_provisioning/scheme_console.h

Header File

- components/wifi_provisioning/include/wifi_provisioning/wifi_config.h

Functions

esp_err_t **wifi_prov_config_data_handler**(uint32_t session_id, const uint8_t *inbuf, ssize_t inlen, uint8_t **outbuf, ssize_t *outlen, void *priv_data)

Handler for receiving and responding to requests from master.

This is to be registered as the `wifi_config` endpoint handler (protocomm `protocomm_req_handler_t`) using `protocomm_add_endpoint()`

Structures

struct **wifi_prov_sta_conn_info_t**

WiFi STA connected status information.

Public Members

char **ip_addr**[IP4ADDR_STRLEN_MAX]

IP Address received by station

char **bssid**[6]

BSSID of the AP to which connection was estalished

char **ssid**[33]

SSID of the to which connection was estalished

uint8_t **channel**

Channel of the AP

uint8_t **auth_mode**

Authorization mode of the AP

struct **wifi_prov_config_get_data_t**

WiFi status data to be sent in response to `get_status` request from master.

Public Members

wifi_prov_sta_state_t **wifi_state**
WiFi state of the station

wifi_prov_sta_fail_reason_t **fail_reason**
Reason for disconnection (valid only when `wifi_state` is `WIFI_STATION_DISCONNECTED`)

wifi_prov_sta_conn_info_t **conn_info**
Connection information (valid only when `wifi_state` is `WIFI_STATION_CONNECTED`)

struct **wifi_prov_config_set_data_t**
WiFi config data received by slave during `set_config` request from master.

Public Members

char **ssid**[33]
SSID of the AP to which the slave is to be connected

char **password**[64]
Password of the AP

char **bssid**[6]
BSSID of the AP

uint8_t **channel**
Channel of the AP

struct **wifi_prov_config_handlers**
Internal handlers for receiving and responding to protocomm requests from master.

This is to be passed as priv_data for protocomm request handler (refer to `wifi_prov_config_data_handler()`) when calling `protocomm_add_endpoint()`.

Public Members

esp_err_t (***get_status_handler**)(*wifi_prov_config_get_data_t* *resp_data, *wifi_prov_ctx_t* **ctx)
Handler function called when connection status of the slave (in WiFi station mode) is requested

esp_err_t (***set_config_handler**)(const *wifi_prov_config_set_data_t* *req_data, *wifi_prov_ctx_t* **ctx)
Handler function called when WiFi connection configuration (eg. AP SSID, password, etc.) of the slave (in WiFi station mode) is to be set to user provided values

esp_err_t (***apply_config_handler**)(*wifi_prov_ctx_t* **ctx)
Handler function for applying the configuration that was set in `set_config_handler`. After applying the station may get connected to the AP or may fail to connect. The slave must be ready to convey the updated connection status information when `get_status_handler` is invoked again by the master.

wifi_prov_ctx_t ***ctx**
Context pointer to be passed to above handler functions upon invocation

Type Definitions

typedef struct wifi_prov_ctx **wifi_prov_ctx_t**

Type of context data passed to each get/set/apply handler function set in *wifi_prov_config_handlers* structure.

This is passed as an opaque pointer, thereby allowing it be defined later in application code as per requirements.

typedef struct *wifi_prov_config_handlers* **wifi_prov_config_handlers_t**

Internal handlers for receiving and responding to protocomm requests from master.

This is to be passed as priv_data for protocomm request handler (refer to `wifi_prov_config_data_handler()`) when calling `protocomm_add_endpoint()`.

Enumerations

enum **wifi_prov_sta_state_t**

WiFi STA status for conveying back to the provisioning master.

Values:

enumerator **WIFI_PROV_STA_CONNECTING**

enumerator **WIFI_PROV_STA_CONNECTED**

enumerator **WIFI_PROV_STA_DISCONNECTED**

enum **wifi_prov_sta_fail_reason_t**

WiFi STA connection fail reason.

Values:

enumerator **WIFI_PROV_STA_AUTH_ERROR**

enumerator **WIFI_PROV_STA_AP_NOT_FOUND**

Code examples for above API are provided in the provisioning directory of ESP-IDF examples.

Code example for above API is provided in wifi/smart_config

Code example for above API is provided in wifi/wifi_easy_connect/dpp-enrollee

2.6 Storage API

2.6.1 FAT Filesystem Support

ESP-IDF uses the FatFs library to work with FAT filesystems. FatFs resides in the `fatfs` component. Although the library can be used directly, many of its features can be accessed via VFS, using the C standard library and POSIX API functions.

Additionally, FatFs has been modified to support the runtime pluggable disk I/O layer. This allows mapping of FatFs drives to physical disks at runtime.

Using FatFs with VFS

The header file fatfs/vfs/esp_vfs_fat.h defines the functions for connecting FatFs and VFS.

The function *esp_vfs_fat_register()* allocates a FATFS structure and registers a given path prefix in VFS. Subsequent operations on files starting with this prefix are forwarded to FatFs APIs. The function *esp_vfs_fat_unregister_path()* deletes the registration with VFS, and frees the FATFS structure.

Most applications use the following workflow when working with esp_vfs_fat_ functions:

1. **Call *esp_vfs_fat_register()* to specify:**
   - Path prefix where to mount the filesystem (e.g. "/sdcard", "/spiflash")
   - FatFs drive number
   - A variable which will receive the pointer to the FATFS structure
2. Call *ff_diskio_register()* to register the disk I/O driver for the drive number used in Step 1.
3. Call the FatFs function f_mount, and optionally f_fdisk, f_mkfs, to mount the filesystem using the same drive number which was passed to *esp_vfs_fat_register()*. For more information, see FatFs documentation.
4. Call the C standard library and POSIX API functions to perform such actions on files as open, read, write, erase, copy, etc. Use paths starting with the path prefix passed to *esp_vfs_register()* (for example, "/sdcard/hello.txt"). The filesystem uses 8.3 filenames format (SFN) by default. If you need to use long filenames (LFN), enable the *CONFIG_FATFS_LONG_FILENAMES* option. More details on the FatFs filenames are available here.
5. Optionally, by enabling the option *CONFIG_FATFS_USE_FASTSEEK*, use the POSIX lseek function to perform it faster, the fast seek will not work for files in write mode, so to take advantage of fast seek, you should open (or close and then reopen) the file in read-only mode.
6. Optionally, call the FatFs library functions directly. In this case, use paths without a VFS prefix (for example, "/hello.txt").
7. Close all open files.
8. Call the FatFs function f_mount for the same drive number, with NULL FATFS* argument, to unmount the filesystem.
9. Call the FatFs function *ff_diskio_register()* with NULL ff_diskio_impl_t* argument and the same drive number to unregister the disk I/O driver.
10. Call *esp_vfs_fat_unregister_path()* with the path where the file system is mounted to remove FatFs from VFS, and free the FATFS structure allocated in Step 1.

The convenience functions esp_vfs_fat_sdmmc_mount, esp_vfs_fat_sdspi_mount and esp_vfs_fat_sdcard_unmount wrap the steps described above and also handle SD card initialization. These two functions are described in the next section.

esp_err_t **esp_vfs_fat_register**(const char *base_path, const char *fat_drive, size_t max_files, FATFS **out_fs)

Register FATFS with VFS component.

This function registers given FAT drive in VFS, at the specified base path. If only one drive is used, fat_drive argument can be an empty string. Refer to FATFS library documentation on how to specify FAT drive. This function also allocates FATFS structure which should be used for f_mount call.

Note: This function doesn't mount the drive into FATFS, it just connects POSIX and C standard library IO function with FATFS. You need to mount desired drive into FATFS separately.

Parameters

- **base_path** –path prefix where FATFS should be registered
- **fat_drive** –FATFS drive specification; if only one drive is used, can be an empty string
- **max_files** –maximum number of files which can be open at the same time
- **out_fs** –**[out]** pointer to FATFS structure which can be used for FATFS f_mount call is returned via this argument.

Returns

- ESP_OK on success

- ESP_ERR_INVALID_STATE if esp_vfs_fat_register was already called
- ESP_ERR_NO_MEM if not enough memory or too many VFSes already registered

esp_err_t **esp_vfs_fat_unregister_path**(const char *base_path)

Un-register FATFS from VFS.

Note: FATFS structure returned by esp_vfs_fat_register is destroyed after this call. Make sure to call f_mount function to unmount it before calling esp_vfs_fat_unregister_ctx. Difference between this function and the one above is that this one will release the correct drive, while the one above will release the last registered one

---

Parameters **base_path** –path prefix where FATFS is registered. This is the same used when esp_vfs_fat_register was called

Returns

- ESP_OK on success
- ESP_ERR_INVALID_STATE if FATFS is not registered in VFS

Using FatFs with VFS and SD cards

The header file fatfs/vfs/esp_vfs_fat.h defines convenience functions *esp_vfs_fat_sdmmc_mount()*, *esp_vfs_fat_sdspi_mount()* and *esp_vfs_fat_sdcard_unmount()*. These function perform Steps 1–3 and 7–9 respectively and handle SD card initialization, but provide only limited error handling. Developers are encouraged to check its source code and incorporate more advanced features into production applications.

The convenience function `esp_vfs_fat_sdmmc_unmount()` unmounts the filesystem and releases the resources acquired by *esp_vfs_fat_sdmmc_mount()*.

esp_err_t **esp_vfs_fat_sdmmc_mount**(const char *base_path, const *sdmmc_host_t* *host_config, const void *slot_config, const *esp_vfs_fat_mount_config_t* *mount_config, *sdmmc_card_t* **out_card)

Convenience function to get FAT filesystem on SD card registered in VFS.

This is an all-in-one function which does the following:

- initializes SDMMC driver or SPI driver with configuration in host_config
- initializes SD card with configuration in slot_config
- mounts FAT partition on SD card using FATFS library, with configuration in mount_config
- registers FATFS library with VFS, with prefix given by base_prefix variable

This function is intended to make example code more compact. For real world applications, developers should implement the logic of probing SD card, locating and mounting partition, and registering FATFS in VFS, with proper error checking and handling of exceptional conditions.

Note: Use this API to mount a card through SDSPI is deprecated. Please call `esp_vfs_fat_sdspi_mount()` instead for that case.

Parameters

- **base_path** –path where partition should be registered (e.g. "/sdcard")
- **host_config** –Pointer to structure describing SDMMC host. When using SDMMC peripheral, this structure can be initialized using SDMMC_HOST_DEFAULT() macro. When using SPI peripheral, this structure can be initialized using SDSPI_HOST_DEFAULT() macro.
- **slot_config** –Pointer to structure with slot configuration. For SDMMC peripheral, pass a pointer to *sdmmc_slot_config_t* structure initialized using SDMMC_SLOT_CONFIG_DEFAULT. (Deprecated) For SPI peripheral, pass a pointer to *sdspi_slot_config_t* structure initialized using SDSPI_SLOT_CONFIG_DEFAULT().
- **mount_config** –pointer to structure with extra parameters for mounting FATFS

- **out_card** –**[out]** if not NULL, pointer to the card information structure will be returned via this argument

Returns

- ESP_OK on success
- ESP_ERR_INVALID_STATE if esp_vfs_fat_sdmmc_mount was already called
- ESP_ERR_NO_MEM if memory can not be allocated
- ESP_FAIL if partition can not be mounted
- other error codes from SDMMC or SPI drivers, SDMMC protocol, or FATFS drivers

esp_err_t **esp_vfs_fat_sdspi_mount**(const char *base_path, const *sdmmc_host_t* *host_config_input, const *sdspi_device_config_t* *slot_config, const *esp_vfs_fat_mount_config_t* *mount_config, *sdmmc_card_t* **out_card)

Convenience function to get FAT filesystem on SD card registered in VFS.

This is an all-in-one function which does the following:

- initializes an SPI Master device based on the SPI Master driver with configuration in slot_config, and attach it to an initialized SPI bus.
- initializes SD card with configuration in host_config_input
- mounts FAT partition on SD card using FATFS library, with configuration in mount_config
- registers FATFS library with VFS, with prefix given by base_prefix variable

This function is intended to make example code more compact. For real world applications, developers should implement the logic of probing SD card, locating and mounting partition, and registering FATFS in VFS, with proper error checking and handling of exceptional conditions.

Note: This function try to attach the new SD SPI device to the bus specified in host_config. Make sure the SPI bus specified in `host_config->slot` have been initialized by `spi_bus_initialize()` before.

Parameters

- **base_path** –path where partition should be registered (e.g. "/sdcard")
- **host_config_input** –Pointer to structure describing SDMMC host. This structure can be initialized using SDSPI_HOST_DEFAULT() macro.
- **slot_config** –Pointer to structure with slot configuration. For SPI peripheral, pass a pointer to *sdspi_device_config_t* structure initialized using SDSPI_DEVICE_CONFIG_DEFAULT().
- **mount_config** –pointer to structure with extra parameters for mounting FATFS
- **out_card** –**[out]** If not NULL, pointer to the card information structure will be returned via this argument. It is suggested to hold this handle and use it to unmount the card later if needed. Otherwise it's not suggested to use more than one card at the same time and unmount one of them in your application.

Returns

- ESP_OK on success
- ESP_ERR_INVALID_STATE if esp_vfs_fat_sdmmc_mount was already called
- ESP_ERR_NO_MEM if memory can not be allocated
- ESP_FAIL if partition can not be mounted
- other error codes from SDMMC or SPI drivers, SDMMC protocol, or FATFS drivers

struct **esp_vfs_fat_mount_config_t**

Configuration arguments for esp_vfs_fat_sdmmc_mount and esp_vfs_fat_spiflash_mount functions.

Public Members

bool **format_if_mount_failed**

If FAT partition can not be mounted, and this parameter is true, create partition table and format the filesystem.

int **max_files**

Max number of open files.

size_t **allocation_unit_size**

If format_if_mount_failed is set, and mount fails, format the card with given allocation unit size. Must be a power of 2, between sector size and 128 * sector size. For SD cards, sector size is always 512 bytes. For wear_levelling, sector size is determined by CONFIG_WL_SECTOR_SIZE option.

Using larger allocation unit size will result in higher read/write performance and higher overhead when storing small files.

Setting this field to 0 will result in allocation unit set to the sector size.

esp_err_t **esp_vfs_fat_sdcard_unmount**(const char *base_path, *sdmmc_card_t* *card)

Unmount an SD card from the FAT filesystem and release resources acquired using `esp_vfs_fat_sdmmc_mount()` or `esp_vfs_fat_sdspi_mount()`

Returns

- ESP_OK on success
- ESP_ERR_INVALID_ARG if the card argument is unregistered
- ESP_ERR_INVALID_STATE if esp_vfs_fat_sdmmc_mount hasn't been called

Using FatFs with VFS in read-only mode

The header file fatfs/vfs/esp_vfs_fat.h also defines the convenience functions *`esp_vfs_fat_rawflash_mount()`* and *`esp_vfs_fat_rawflash_unmount()`*. These functions perform Steps 1-3 and 7-9 respectively for read-only FAT partitions. These are particularly helpful for data partitions written only once during factory provisioning which will not be changed by production application throughout the lifetime of the hardware.

esp_err_t **esp_vfs_fat_rawflash_mount**(const char *base_path, const char *partition_label, const *esp_vfs_fat_mount_config_t* *mount_config)

Convenience function to initialize read-only FAT filesystem and register it in VFS.

This is an all-in-one function which does the following:

- finds the partition with defined partition_label. Partition label should be configured in the partition table.
- mounts FAT partition using FATFS library
- registers FATFS library with VFS, with prefix given by base_prefix variable

---

Note: Wear levelling is not used when FAT is mounted in read-only mode using this function.

Parameters

- **base_path** –path where FATFS partition should be mounted (e.g. "/spiflash")
- **partition_label** –label of the partition which should be used
- **mount_config** –pointer to structure with extra parameters for mounting FATFS

Returns

- ESP_OK on success
- ESP_ERR_NOT_FOUND if the partition table does not contain FATFS partition with given label
- ESP_ERR_INVALID_STATE if esp_vfs_fat_rawflash_mount was already called for the same partition

- ESP_ERR_NO_MEM if memory can not be allocated
- ESP_FAIL if partition can not be mounted
- other error codes from SPI flash driver, or FATFS drivers

esp_err_t **esp_vfs_fat_rawflash_unmount**(const char *base_path, const char *partition_label)

Unmount FAT filesystem and release resources acquired using esp_vfs_fat_rawflash_mount.

Parameters

- **base_path** –path where partition should be registered (e.g. "/spiflash")
- **partition_label** –label of partition to be unmounted

Returns

- ESP_OK on success
- ESP_ERR_INVALID_STATE if esp_vfs_fat_spiflash_mount hasn't been called

FatFS disk IO layer

FatFs has been extended with API functions that register the disk I/O driver at runtime.

They provide implementation of disk I/O functions for SD/MMC cards and can be registered for the given FatFs drive number using the function *ff_diskio_register_sdmmc()*.

void **ff_diskio_register**(BYTE pdrv, const *ff_diskio_impl_t* *discio_impl)

Register or unregister diskio driver for given drive number.

When FATFS library calls one of disk_xxx functions for driver number pdrv, corresponding function in discio_impl for given pdrv will be called.

Parameters

- **pdrv** –drive number
- **discio_impl** –pointer to *ff_diskio_impl_t* structure with diskio functions or NULL to unregister and free previously registered drive

struct **ff_diskio_impl_t**

Structure of pointers to disk IO driver functions.

See FatFs documentation for details about these functions

Public Members

DSTATUS (***init**)(unsigned char pdrv)

disk initialization function

DSTATUS (***status**)(unsigned char pdrv)

disk status check function

DRESULT (***read**)(unsigned char pdrv, unsigned char *buff, uint32_t sector, unsigned count)

sector read function

DRESULT (***write**)(unsigned char pdrv, const unsigned char *buff, uint32_t sector, unsigned count)

sector write function

DRESULT (***ioctl**)(unsigned char pdrv, unsigned char cmd, void *buff)

function to get info about disk and do some misc operations

void **ff_diskio_register_sdmmc**(unsigned char pdrv, *sdmmc_card_t* *card)

Register SD/MMC diskio driver

Parameters

- **pdrv** –drive number
- **card** –pointer to *sdmmc_card_t* structure describing a card; card should be initialized before calling f_mount.

esp_err_t **ff_diskio_register_wl_partition**(unsigned char pdrv, *wl_handle_t* flash_handle)

Register spi flash partition

Parameters

- **pdrv** –drive number
- **flash_handle** –handle of the wear levelling partition.

esp_err_t **ff_diskio_register_raw_partition**(unsigned char pdrv, const *esp_partition_t* *part_handle)

Register spi flash partition

Parameters

- **pdrv** –drive number
- **part_handle** –pointer to raw flash partition.

2.6.2 Manufacturing Utility

Introduction

This utility is designed to create instances of factory NVS partition images on a per-device basis for mass manufacturing purposes. The NVS partition images are created from CSV files containing user-provided configurations and values.

Please note that this utility only creates manufacturing binary images which then need to be flashed onto your devices using:

- esptool.py
- Flash Download tool (available on Windows only).Just download it, unzip, and follow the instructions inside the *doc* folder.
- Direct flash programming using custom production tools.

Prerequisites

This utility is dependent on esp-idf's NVS partition utility.

- **Operating System requirements:**
  - Linux / MacOS / Windows (standard distributions)
- **The following packages are needed to use this utility:**
  - Python

Note:

Before using this utility, please make sure that:

- The path to Python is added to the PATH environment variable.
- You have installed the packages from *requirement.txt*, the file in the root of the esp-idf directory.

Workflow

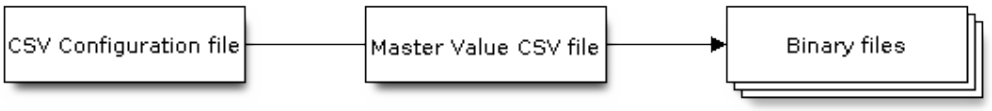

CSV Configuration File

This file contains the configuration of the device to be flashed.

The data in the configuration file has the following format (the *REPEAT* tag is optional):

```
name1,namespace,    <-- First entry should be of type "namespace"
key1,type1,encoding1
key2,type2,encoding2,REPEAT
name2,namespace,
key3,type3,encoding3
key4,type4,encoding4
```

Note: The first line in this file should always be the `namespace` entry.

Each line should have three parameters: `key,type,encoding`, separated by a comma. If the `REPEAT` tag is present, the value corresponding to this key in the master value CSV file will be the same for all devices.

Please refer to README of the NVS Partition Generator utility for detailed description of each parameter.

Below is a sample example of such a configuration file:

```
app,namespace,
firmware_key,data,hex2bin
serial_no,data,string,REPEAT
device_no,data,i32
```

Note:

Make sure there are no spaces:

- before and after ‘,’
- at the end of each line in a CSV file

Master Value CSV File

This file contains details of the devices to be flashed. Each line in this file corresponds to a device instance.

The data in the master value CSV file has the following format:

```
key1,key2,key3,.....
value1,value2,value3,....
```

Note: The first line in the file should always contain the `key` names. All the keys from the configuration file should be present here in the **same order**. This file can have additional columns (keys). The additional keys will be treated as metadata and would not be part of the final binary files.

Each line should contain the `value` of the corresponding keys, separated by a comma. If the key has the `REPEAT` tag, its corresponding value **must** be entered in the second line only. Keep the entry empty for this value in the following lines.

The description of this parameter is as follows:

`value` Data value

Data value is the value of data corresponding to the key.

Below is a sample example of a master value CSV file:

```
id,firmware_key,serial_no,device_no
1,1a2b3c4d5e6faabb,A1,101
2,1a2b3c4d5e6fccdd,,102
3,1a2b3c4d5e6feeff,,103
```

Note: *If the 'REPEAT' tag is present, a new master value CSV file will be created in the same folder as the input Master CSV File with the values inserted at each line for the key with the 'REPEAT' tag.*

This utility creates intermediate CSV files which are used as input for the NVS partition utility to generate the binary files.

The format of this intermediate CSV file is as follows:

```
key,type,encoding,value
key,namespace, ,
key1,type1,encoding1,value1
key2,type2,encoding2,value2
```

An instance of an intermediate CSV file will be created for each device on an individual basis.

Running the utility

Usage:

```
python mfg_gen.py [-h] {generate,generate-key} ...

Optional Arguments:
+-----+------------+-------------------------------------------------------------
↪-------+
| No. | Parameter  |                           Description                       ␣
↪       |
+=====+============+=============================================================================+
| 1   | -h, --help |        show this help message and exit                       ␣
↪       |
+-----+------------+-------------------------------------------------------------
↪-------+

Commands:
        Run mfg_gen.py {command} -h for additional help
+-----+-------------+-------------------------------------------------------------
↪-------+
| No. | Parameter   |                             Description                   ␣
↪       |
+=====+=============+=============================================================================+
| 1   | generate    |      Generate NVS partition                                  ␣
↪       |
+-----+-------------+-------------------------------------------------------------
↪-------+
```

(continues on next page)

(continued from previous page)

```
| 2   | generate-key |      Generate keys for encryption                          ␣
↪       |
+-----+--------------+-------------------------------------------------------------
↪-------+
```

To generate factory images for each device (Default): Usage:

```
python mfg_gen.py generate [-h] [--fileid FILEID] [--version {1,2}] [--keygen]
                                [--keyfile KEYFILE] [--inputkey INPUTKEY]
                                [--outdir OUTDIR]
                                conf values prefix size

Positional Arguments:
+--------------+-------------------------------------------------------------
↪-------+
| Parameter    |                          Description                        ␣
↪       |
+==============+=============================================================+
| conf         |        Path to configuration csv file to parse              ␣
↪       |
+--------------+-------------------------------------------------------------
↪-------+
| values       |        Path to values csv file to parse                     ␣
↪       |
+--------------+-------------------------------------------------------------
↪-------+
| prefix       |        Unique name for each output filename prefix          ␣
↪       |
+-----+--------------+-------------------------------------------------------
↪-------+
| size         |        Size of NVS partition in bytes                       ␣
↪       |
|              |        (must be multiple of 4096)                           ␣
↪       |
+--------------+-------------------------------------------------------------
↪-------+

Optional Arguments:
+---------------------+-------------------------------------------------------
↪------------+
| Parameter           |                          Description                 ␣
↪            |
+=====================+=============================================================+
| -h, --help          |     show this help message and exit                  ␣
↪            |
+---------------------+-------------------------------------------------------
↪------------+
| --fileid FILEID     |     Unique file identifier(any key in values file)   ␣
↪            |
|                     |     for each filename suffix (Default: numeric value(1,
↪2,3...)     |
+---------------------+-------------------------------------------------------
↪------------+
| --version {1,2}     |     Set multipage blob version.                      ␣
↪            |
|                     |     Version 1 - Multipage blob support disabled.     ␣
↪            |
|                     |     Version 2 - Multipage blob support enabled.      ␣
↪            |
|                     |     Default: Version 2                               ␣
↪            |
```

(continues on next page)

(continued from previous page)

```
+--------------------+-------------------------------------------------------------
↪------------+
| --keygen           |     Generates key for encrypting NVS partition              ␣
↪            |
+--------------------+-------------------------------------------------------------
↪------------+
| --inputkey INPUTKEY |     File having key for encrypting NVS partition            ␣
↪            |
+--------------------+-------------------------------------------------------------
↪------------+
| --outdir OUTDIR    |     Output directory to store files created                 ␣
↪            |
|                    |     (Default: current directory)                            ␣
↪            |
+--------------------+-------------------------------------------------------------
↪------------+
```

You can run the utility to generate factory images for each device using the command below. A sample CSV file is provided with the utility:

```
python mfg_gen.py generate samples/sample_config.csv samples/sample_values_
↪singlepage_blob.csv Sample 0x3000
```

The master value CSV file should have the path in the `file` type relative to the directory from which you are running the utility.

To generate encrypted factory images for each device:

You can run the utility to encrypt factory images for each device using the command below. A sample CSV file is provided with the utility:

- Encrypt by allowing the utility to generate encryption keys:

```
python mfg_gen.py generate samples/sample_config.csv samples/sample_values_
↪singlepage_blob.csv Sample 0x3000 --keygen
```

Note: Encryption key of the following format `<outdir>/keys/keys-<prefix>-<fileid>.bin` is created.

Note: This newly created file having encryption keys in `keys/` directory is compatible with NVS key-partition structure. Refer to *NVS key partition* for more details.

- Encrypt by providing the encryption keys as input binary file:

```
python mfg_gen.py generate samples/sample_config.csv samples/sample_values_
↪singlepage_blob.csv Sample 0x3000 --inputkey keys/sample_keys.bin
```

To generate only encryption keys: Usage:

```
python mfg_gen.py generate-key [-h] [--keyfile KEYFILE] [--outdir OUTDIR]

Optional Arguments:
+--------------------+-------------------------------------------------------------
↪-------------+
| Parameter          |                          Description                        ␣
↪             |
+====================+=============================================================
| -h, --help         |     show this help message and exit                         ␣
↪             |
```

(continues on next page)

(continued from previous page)

```
+--------------------+------------------------------------------------------------
↪-------------+
| --keyfile KEYFILE  |      Path to output encryption keys file                  ␣
↪             |
+--------------------+------------------------------------------------------------
↪-------------+
| --outdir OUTDIR    |      Output directory to store files created.             ␣
↪             |
|                    |      (Default: current directory)                         ␣
↪             |
+--------------------+------------------------------------------------------------
↪-------------+
```

You can run the utility to generate only encryption keys using the command below:

```
python mfg_gen.py generate-key
```

Note: Encryption key of the following format `<outdir>/keys/keys-<timestamp>.bin` is created. Timestamp format is: `%m-%d_%H-%M`.

Note: To provide custom target filename use the –keyfile argument.

Generated encryption key binary file can further be used to encrypt factory images created on the per device basis.

The default numeric value: 1,2,3⋯of the `fileid` argument corresponds to each line bearing device instance values in the master value CSV file.

While running the manufacturing utility, the following folders will be created in the specified `outdir` directory:

- `bin/` for storing the generated binary files
- `csv/` for storing the generated intermediate CSV files
- `keys/` for storing encryption keys (when generating encrypted factory images)

2.6.3 Non-volatile storage library

Introduction

Non-volatile storage (NVS) library is designed to store key-value pairs in flash. This section introduces some concepts used by NVS.

Underlying storage Currently, NVS uses a portion of main flash memory through the *esp_partition* API. The library uses all the partitions with `data` type and `nvs` subtype. The application can choose to use the partition with the label `nvs` through the *`nvs_open()`* API function or any other partition by specifying its name using the *`nvs_open_from_partition()`* API function.

Future versions of this library may have other storage backends to keep data in another flash chip (SPI or I2C), RTC, FRAM, etc.

Note: if an NVS partition is truncated (for example, when the partition table layout is changed), its contents should be erased. ESP-IDF build system provides a `idf.py erase-flash` target to erase all contents of the flash chip.

Note: NVS works best for storing many small values, rather than a few large values of the type 'string' and 'blob'. If you need to store large blobs or strings, consider using the facilities provided by the FAT filesystem on top of the wear levelling library.

Keys and values NVS operates on key-value pairs. Keys are ASCII strings; the maximum key length is currently 15 characters. Values can have one of the following types:

- integer types: `uint8_t`, `int8_t`, `uint16_t`, `int16_t`, `uint32_t`, `int32_t`, `uint64_t`, `int64_t`
- zero-terminated string
- variable length binary data (blob)

Note: String values are currently limited to 4000 bytes. This includes the null terminator. Blob values are limited to 508,000 bytes or 97.6% of the partition size - 4000 bytes, whichever is lower.

Additional types, such as `float` and `double` might be added later.

Keys are required to be unique. Assigning a new value to an existing key works as follows:

- If the new value is of the same type as the old one, value is updated.
- If the new value has a different data type, an error is returned.

Data type check is also performed when reading a value. An error is returned if the data type of the read operation does not match the data type of the value.

Namespaces To mitigate potential conflicts in key names between different components, NVS assigns each key-value pair to one of namespaces. Namespace names follow the same rules as key names, i.e., the maximum length is 15 characters. Furthermore, there can be no more than 254 different namespaces in one NVS partition. Namespace name is specified in the *`nvs_open()`* or *`nvs_open_from_partition`* call. This call returns an opaque handle, which is used in subsequent calls to the `nvs_get_*`, `nvs_set_*`, and *`nvs_commit()`* functions. This way, a handle is associated with a namespace, and key names will not collide with same names in other namespaces. Please note that the namespaces with the same name in different NVS partitions are considered as separate namespaces.

NVS iterators Iterators allow to list key-value pairs stored in NVS, based on specified partition name, namespace, and data type.

There are the following functions available:

- *`nvs_entry_find()`* returns an opaque handle, which is used in subsequent calls to the *`nvs_entry_next()`* and *`nvs_entry_info()`* functions.
- *`nvs_entry_next()`* returns iterator to the next key-value pair.
- *`nvs_entry_info()`* returns information about each key-value pair

If none or no other key-value pair was found for given criteria, *`nvs_entry_find()`* and *`nvs_entry_next()`* return NULL. In that case, the iterator does not have to be released. If the iterator is no longer needed, you can release it by using the function *`nvs_release_iterator()`*.

Security, tampering, and robustness NVS is not directly compatible with the ESP32 flash encryption system. However, data can still be stored in encrypted form if NVS encryption is used together with ESP32 flash encryption. Please refer to *NVS Encryption* for more details.

If NVS encryption is not used, it is possible for anyone with physical access to the flash chip to alter, erase, or add key-value pairs. With NVS encryption enabled, it is not possible to alter or add a key-value pair and get recognized as a valid pair without knowing corresponding NVS encryption keys. However, there is no tamper-resistance against the erase operation.

The library does try to recover from conditions when flash memory is in an inconsistent state. In particular, one should be able to power off the device at any point and time and then power it back on. This should not result in loss of data, except for the new key-value pair if it was being written at the moment of powering off. The library should also be able to initialize properly with any random data present in flash memory.

NVS Encryption

Data stored in NVS partitions can be encrypted using AES-XTS in the manner similar to the one mentioned in disk encryption standard IEEE P1619. For the purpose of encryption, each entry is treated as one *sector* and relative address of the entry (w.r.t. partition-start) is fed to the encryption algorithm as *sector-number*. The NVS Encryption can be enabled by enabling *CONFIG_NVS_ENCRYPTION*. The keys required for NVS encryption are stored in yet another partition, which is protected using *Flash Encryption*. Therefore, enabling *Flash Encryption* is a prerequisite for NVS encryption.

The NVS Encryption is enabled by default when *Flash Encryption* is enabled. This is done because Wi-Fi driver stores credentials (like SSID and passphrase) in the default NVS partition. It is important to encrypt them as default choice if platform level encryption is already enabled.

For using NVS encryption, the partition table must contain the *NVS key partition*. Two partition tables containing the *NVS key partition* are provided for NVS encryption under the partition table option (menuconfig->Partition Table). They can be selected with the project configuration menu (`idf.py menuconfig`). Please refer to the example security/flash_encryption for how to configure and use NVS encryption feature.

NVS key partition

An application requiring NVS encryption support needs to be compiled with a key-partition of the type *data* and subtype *key*. This partition should be marked as *encrypted* and its size should be the minimum partition size (4KB). Refer to *Partition Tables* for more details. Two additional partition tables which contain the *NVS key partition* are provided under the partition table option (menuconfig->Partition Table). They can be directly used for *NVS Encryption*. The structure of these partitions is depicted below.

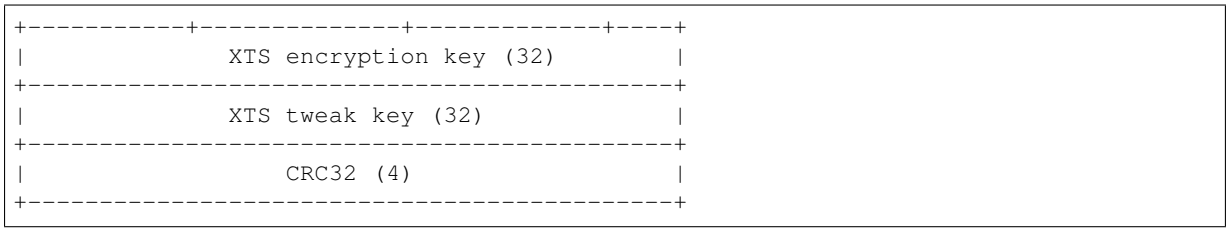

The XTS encryption keys in the *NVS key partition* can be generated in one of the following two ways.

1. Generate the keys on the ESP chip:
   When NVS encryption is enabled the `nvs_flash_init()` API function can be used to initialize the encrypted default NVS partition. The API function internally generates the XTS encryption keys on the ESP chip. The API function finds the first *NVS key partition*. Then the API function automatically generates and stores the NVS keys in that partition by making use of the `nvs_flash_generate_keys()` API function provided by nvs_flash/include/nvs_flash.h. New keys are generated and stored only when the respective key partiton is empty. The same key partition can then be used to read the security configurations for initializing a custom encrypted NVS partition with help of `nvs_flash_secure_init_partition()`.
   The API functions `nvs_flash_secure_init()` and `nvs_flash_secure_init_partition()` do not generate the keys internally. When these API functions are used for initializing encrypted NVS partitions, the keys can be generated after startup using the `nvs_flash_generate_keys()` API function provided by `nvs_flash.h`. The API function will then write those keys onto the key-partition in encrypted form.
2. Use pre-generated key partition:
   This option will be required by the user when keys in the *NVS key partition* are not generated by the application. The *NVS key partition* containing the XTS encryption keys can be generated with the

help of *NVS Partition Generator Utility*. Then the user can store the pre generated key partition on the flash with help of the following two commands:
i) Build and flash the partition table

```
idf.py partition-table partition-table-flash
```

ii) Store the keys in the *NVS key partition* (on the flash) with the help of parttool.py (see Partition Tool section in *partition-tables* for more details)

```
parttool.py --port /dev/ttyUSB0 --partition-table-offset "nvs_key␣
↪partition offset" write_partition --partition-name="name of nvs_key␣
↪partition" --input "nvs_key partition"
```

Since the key partition is marked as *encrypted* and *Flash Encryption* is enabled, the bootloader will encrypt this partition using flash encryption key on the first boot.

It is possible for an application to use different keys for different NVS partitions and thereby have multiple key-partitions. However, it is a responsibility of the application to provide correct key-partition/keys for the purpose of encryption/decryption.

Encrypted Read/Write The same NVS API functions `nvs_get_*` or `nvs_set_*` can be used for reading of, and writing to an encrypted nvs partition as well.

Encrypt the default NVS partition: To enable encryption for the default NVS partition no additional steps are necessary. When *CONFIG_NVS_ENCRYPTION* is enabled, the *`nvs_flash_init()`* API function internally performs some additional steps using the first *NVS key partition* found to enable encryption for the default NVS partition (refer to the API documentation for more details). Alternatively, *`nvs_flash_secure_init()`* API function can also be used to enable encryption for the default NVS partition.

Encrypt a custom NVS partition: To enable encryption for a custom NVS partition, *`nvs_flash_secure_init_partition()`* API function is used instead of *`nvs_flash_init_partition()`*.

When *`nvs_flash_secure_init()`* and *`nvs_flash_secure_init_partition()`* API functions are used, the applications are expected to follow the steps below in order to perform NVS read/write operations with encryption enabled.

1. Find key partition and NVS data partition using `esp_partition_find*` API functions.
2. Populate the *`nvs_sec_cfg_t`* struct using the *`nvs_flash_read_security_cfg()`* or *`nvs_flash_generate_keys()`* API functions.
3. Initialise NVS flash partition using the *`nvs_flash_secure_init()`* or *`nvs_flash_secure_init_partition()`* API functions.
4. Open a namespace using the *`nvs_open()`* or *`nvs_open_from_partition()`* API functions.
5. Perform NVS read/write operations using `nvs_get_*` or `nvs_set_*`.
6. Deinitialise an NVS partition using *`nvs_flash_deinit()`*.

NVS Partition Generator Utility

This utility helps generate NVS partition binary files which can be flashed separately on a dedicated partition via a flashing utility. Key-value pairs to be flashed onto the partition can be provided via a CSV file. For more details, please refer to *NVS Partition Generator Utility*.

Application Example

You can find code examples in the storage directory of ESP-IDF examples:

storage/nvs_rw_value

Demonstrates how to read a single integer value from, and write it to NVS.

The value checked in this example holds the number of the ESP32 module restarts. The value ' s function as a counter is only possible due to its storing in NVS.

The example also shows how to check if a read / write operation was successful, or if a certain value has not been initialized in NVS. The diagnostic procedure is provided in plain text to help you track the program flow and capture any issues on the way.

storage/nvs_rw_blob

Demonstrates how to read a single integer value and a blob (binary large object), and write them to NVS to preserve this value between ESP32 module restarts.

- value - tracks the number of the ESP32 module soft and hard restarts.
- blob - contains a table with module run times. The table is read from NVS to dynamically allocated RAM. A new run time is added to the table on each manually triggered soft restart, and then the added run time is written to NVS. Triggering is done by pulling down GPIO0.

The example also shows how to implement the diagnostic procedure to check if the read / write operation was successful.

storage/nvs_rw_value_cxx

This example does exactly the same as storage/nvs_rw_value, except that it uses the C++ NVS handle class.

Internals

Log of key-value pairs NVS stores key-value pairs sequentially, with new key-value pairs being added at the end. When a value of any given key has to be updated, a new key-value pair is added at the end of the log and the old key-value pair is marked as erased.

Pages and entries NVS library uses two main entities in its operation: pages and entries. Page is a logical structure which stores a portion of the overall log. Logical page corresponds to one physical sector of flash memory. Pages which are in use have a *sequence number* associated with them. Sequence numbers impose an ordering on pages. Higher sequence numbers correspond to pages which were created later. Each page can be in one of the following states:

Empty/uninitialized Flash storage for the page is empty (all bytes are `0xff`). Page is not used to store any data at this point and does not have a sequence number.

Active Flash storage is initialized, page header has been written to flash, page has a valid sequence number. Page has some empty entries and data can be written there. No more than one page can be in this state at any given moment.

Full Flash storage is in a consistent state and is filled with key-value pairs. Writing new key-value pairs into this page is not possible. It is still possible to mark some key-value pairs as erased.

Erasing Non-erased key-value pairs are being moved into another page so that the current page can be erased. This is a transient state, i.e., page should never stay in this state at the time when any API call returns. In case of a sudden power off, the move-and-erase process will be completed upon the next power-on.

Corrupted Page header contains invalid data, and further parsing of page data was canceled. Any items previously written into this page will not be accessible. The corresponding flash sector will not be erased immediately and will be kept along with sectors in *uninitialized* state for later use. This may be useful for debugging.

Mapping from flash sectors to logical pages does not have any particular order. The library will inspect sequence numbers of pages found in each flash sector and organize pages in a list based on these numbers.

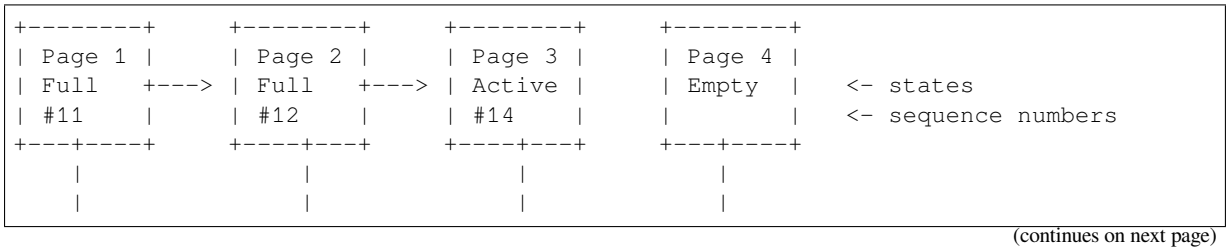

(continues on next page)

(continued from previous page)

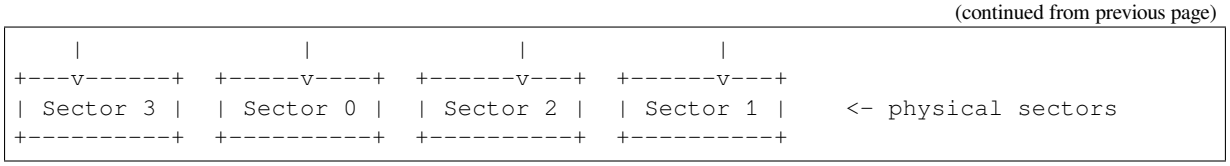

Structure of a page For now, we assume that flash sector size is 4096 bytes and that ESP32 flash encryption hardware operates on 32-byte blocks. It is possible to introduce some settings configurable at compile-time (e.g., via menuconfig) to accommodate flash chips with different sector sizes (although it is not clear if other components in the system, e.g., SPI flash driver and SPI flash cache can support these other sizes).

Page consists of three parts: header, entry state bitmap, and entries themselves. To be compatible with ESP32 flash encryption, the entry size is 32 bytes. For integer types, an entry holds one key-value pair. For strings and blobs, an entry holds part of key-value pair (more on that in the entry structure description).

The following diagram illustrates the page structure. Numbers in parentheses indicate the size of each part in bytes.

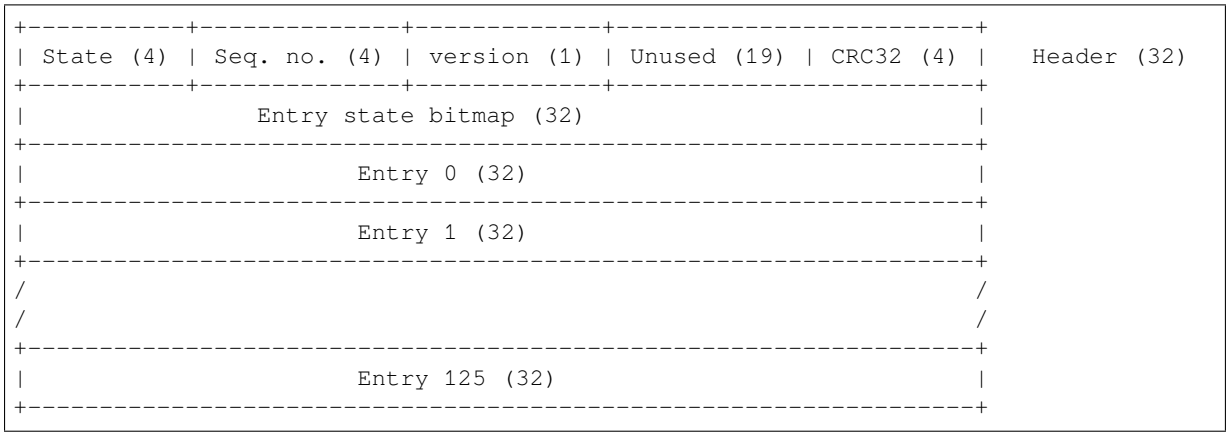

Page header and entry state bitmap are always written to flash unencrypted. Entries are encrypted if flash encryption feature of ESP32 is used.

Page state values are defined in such a way that changing state is possible by writing 0 into some of the bits. Therefore it is not necessary to erase the page to change its state unless that is a change to the *erased* state.

The version field in the header reflects the NVS format version used. For backward compatibility reasons, it is decremented for every version upgrade starting at 0xff (i.e., 0xff for version-1, 0xfe for version-2 and so on).

CRC32 value in the header is calculated over the part which does not include a state value (bytes 4 to 28). The unused part is currently filled with `0xff` bytes.

The following sections describe the structure of entry state bitmap and entry itself.

Entry and entry state bitmap Each entry can be in one of the following three states represented with two bits in the entry state bitmap. The final four bits in the bitmap (256 - 2 * 126) are not used.

Empty (2' b11) Nothing is written into the specific entry yet. It is in an uninitialized state (all bytes are `0xff`).

Written (2' b10) A key-value pair (or part of key-value pair which spans multiple entries) has been written into the entry.

Erased (2' b00) A key-value pair in this entry has been discarded. Contents of this entry will not be parsed anymore.

Structure of entry For values of primitive types (currently integers from 1 to 8 bytes long), entry holds one key-value pair. For string and blob types, entry holds part of the whole key-value pair. For strings, in case when a key-value pair spans multiple entries, all entries are stored in the same page. Blobs are allowed to span over multiple pages by dividing them into smaller chunks. For tracking these chunks, an additional fixed length metadata entry is stored called "blob index". Earlier formats of blobs are still supported (can be read and modified). However, once the blobs are modified, they are stored using the new format.

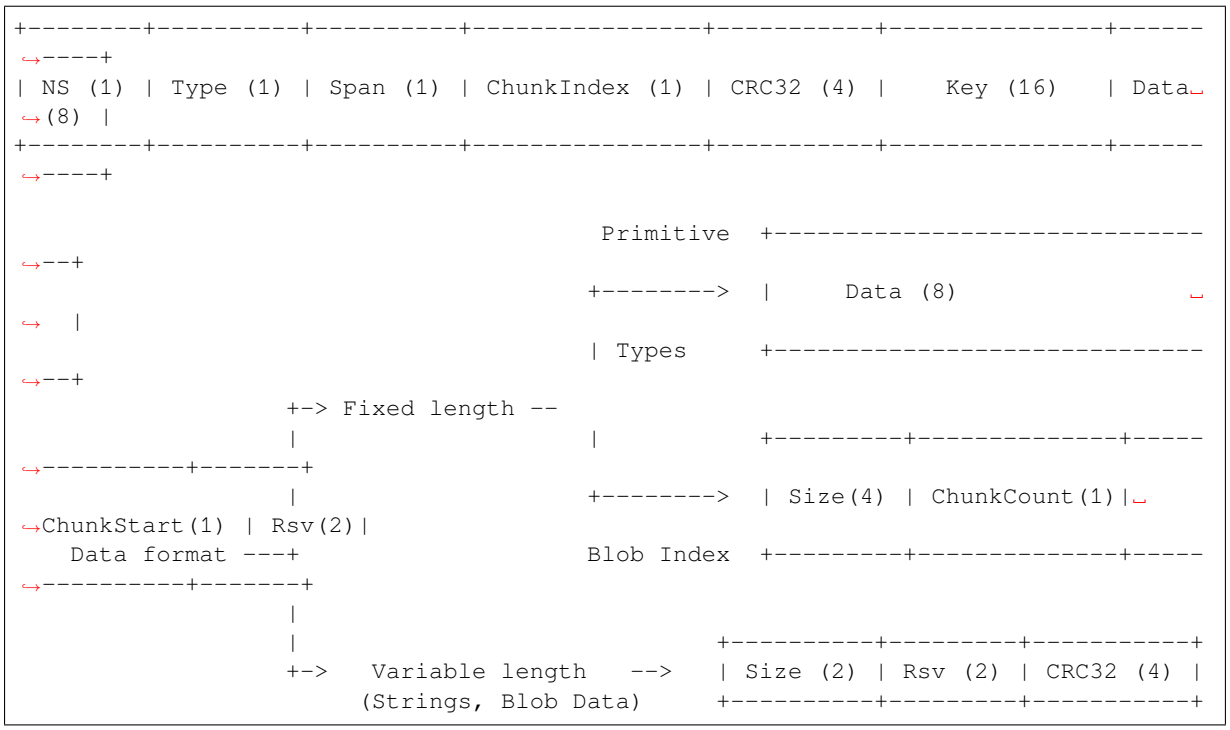

Individual fields in entry structure have the following meanings:

NS Namespace index for this entry. For more information on this value, see the section on namespaces implementation.

Type One byte indicating the value data type. See the `ItemType` enumeration in nvs_flash/include/nvs_handle.hpp for possible values.

Span Number of entries used by this key-value pair. For integer types, this is equal to 1. For strings and blobs, this depends on value length.

ChunkIndex Used to store the index of a blob-data chunk for blob types. For other types, this should be `0xff`.

CRC32 Checksum calculated over all the bytes in this entry, except for the CRC32 field itself.

Key Zero-terminated ASCII string containing a key name. Maximum string length is 15 bytes, excluding a zero terminator.

Data For integer types, this field contains the value itself. If the value itself is shorter than 8 bytes, it is padded to the right, with unused bytes filled with `0xff`.

For "blob index" entry, these 8 bytes hold the following information about data-chunks:

- **Size** (Only for blob index.) Size, in bytes, of complete blob data.
- **ChunkCount** (Only for blob index.) Total number of blob-data chunks into which the blob was divided during storage.
- **ChunkStart** (Only for blob index.) ChunkIndex of the first blob-data chunk of this blob. Subsequent chunks have chunkIndex incrementally allocated (step of 1).

For string and blob data chunks, these 8 bytes hold additional data about the value, which are described below:

- **Size** (Only for strings and blobs.) Size, in bytes, of actual data. For strings, this includes zero terminators.
- **CRC32** (Only for strings and blobs.) Checksum calculated over all bytes of data.

Variable length values (strings and blobs) are written into subsequent entries, 32 bytes per entry. The *Span* field of the first entry indicates how many entries are used.

Namespaces As mentioned above, each key-value pair belongs to one of the namespaces. Namespace identifiers (strings) are stored as keys of key-value pairs in namespace with index 0. Values corresponding to these keys are indexes of these namespaces.

```
+-----------------------------------------+
| NS=0 Type=uint8_t Key="wifi" Value=1    |   Entry describing namespace "wifi"
+-----------------------------------------+
| NS=1 Type=uint32_t Key="channel" Value=6  |   Key "channel" in namespace "wifi"
```

(continues on next page)

(continued from previous page)

```
+----------------------------------------+
| NS=0 Type=uint8_t Key="pwm" Value=2    |   Entry describing namespace "pwm"
+----------------------------------------+
| NS=2 Type=uint16_t Key="channel" Value=20 |   Key "channel" in namespace "pwm"
+----------------------------------------+
```

Item hash list To reduce the number of reads from flash memory, each member of the Page class maintains a list of pairs: item index; item hash. This list makes searches much quicker. Instead of iterating over all entries, reading them from flash one at a time, *Page::findItem* first performs a search for the item hash in the hash list. This gives the item index within the page if such an item exists. Due to a hash collision, it is possible that a different item will be found. This is handled by falling back to iteration over items in flash.

Each node in the hash list contains a 24-bit hash and 8-bit item index. Hash is calculated based on item namespace, key name, and ChunkIndex. CRC32 is used for calculation; the result is truncated to 24 bits. To reduce the overhead for storing 32-bit entries in a linked list, the list is implemented as a double-linked list of arrays. Each array holds 29 entries, for the total size of 128 bytes, together with linked list pointers and a 32-bit count field. The minimum amount of extra RAM usage per page is therefore 128 bytes; maximum is 640 bytes.

API Reference

Header File

- components/nvs_flash/include/nvs_flash.h

Functions

esp_err_t **nvs_flash_init** (void)

Initialize the default NVS partition.

This API initialises the default NVS partition. The default NVS partition is the one that is labeled "nvs" in the partition table.

When "NVS_ENCRYPTION" is enabled in the menuconfig, this API enables the NVS encryption for the default NVS partition as follows

a. Read security configurations from the first NVS key partition listed in the partition table. (NVS key partition is any "data" type partition which has the subtype value set to "nvs_keys")
b. If the NVS key partiton obtained in the previous step is empty, generate and store new keys in that NVS key partiton.
c. Internally call "nvs_flash_secure_init()" with the security configurations obtained/generated in the previous steps.

Post initialization NVS read/write APIs remain the same irrespective of NVS encryption.

Returns

- ESP_OK if storage was successfully initialized.
- ESP_ERR_NVS_NO_FREE_PAGES if the NVS storage contains no empty pages (which may happen if NVS partition was truncated)
- ESP_ERR_NOT_FOUND if no partition with label "nvs" is found in the partition table
- ESP_ERR_NO_MEM in case memory could not be allocated for the internal structures
- one of the error codes from the underlying flash storage driver
- error codes from nvs_flash_read_security_cfg API (when "NVS_ENCRYPTION" is enabled).
- error codes from nvs_flash_generate_keys API (when "NVS_ENCRYPTION" is enabled).
- error codes from nvs_flash_secure_init_partition API (when "NVS_ENCRYPTION" is enabled) .

esp_err_t **nvs_flash_init_partition** (const char *partition_label)

Initialize NVS flash storage for the specified partition.

Parameters **partition_label** –**[in]** Label of the partition. Must be no longer than 16 characters.

Returns

- ESP_OK if storage was successfully initialized.
- ESP_ERR_NVS_NO_FREE_PAGES if the NVS storage contains no empty pages (which may happen if NVS partition was truncated)
- ESP_ERR_NOT_FOUND if specified partition is not found in the partition table
- ESP_ERR_NO_MEM in case memory could not be allocated for the internal structures
- one of the error codes from the underlying flash storage driver

esp_err_t **nvs_flash_init_partition_ptr** (const *esp_partition_t* *partition)

Initialize NVS flash storage for the partition specified by partition pointer.

Parameters **partition** –**[in]** pointer to a partition obtained by the ESP partition API.

Returns

- ESP_OK if storage was successfully initialized
- ESP_ERR_NVS_NO_FREE_PAGES if the NVS storage contains no empty pages (which may happen if NVS partition was truncated)
- ESP_ERR_INVALID_ARG in case partition is NULL
- ESP_ERR_NO_MEM in case memory could not be allocated for the internal structures
- one of the error codes from the underlying flash storage driver

esp_err_t **nvs_flash_deinit** (void)

Deinitialize NVS storage for the default NVS partition.

Default NVS partition is the partition with "nvs" label in the partition table.

Returns

- ESP_OK on success (storage was deinitialized)
- ESP_ERR_NVS_NOT_INITIALIZED if the storage was not initialized prior to this call

esp_err_t **nvs_flash_deinit_partition** (const char *partition_label)

Deinitialize NVS storage for the given NVS partition.

Parameters **partition_label** –**[in]** Label of the partition

Returns

- ESP_OK on success
- ESP_ERR_NVS_NOT_INITIALIZED if the storage for given partition was not initialized prior to this call

esp_err_t **nvs_flash_erase** (void)

Erase the default NVS partition.

Erases all contents of the default NVS partition (one with label "nvs").

Note: If the partition is initialized, this function first de-initializes it. Afterwards, the partition has to be initialized again to be used.

Returns

- ESP_OK on success
- ESP_ERR_NOT_FOUND if there is no NVS partition labeled "nvs" in the partition table
- different error in case de-initialization fails (shouldn't happen)

esp_err_t **nvs_flash_erase_partition** (const char *part_name)

Erase specified NVS partition.

Erase all content of a specified NVS partition

Note: If the partition is initialized, this function first de-initializes it. Afterwards, the partition has to be initialized again to be used.

Parameters **`part_name`** –**[in]** Name (label) of the partition which should be erased

Returns

- ESP_OK on success
- ESP_ERR_NOT_FOUND if there is no NVS partition with the specified name in the partition table
- different error in case de-initialization fails (shouldn't happen)

esp_err_t **`nvs_flash_erase_partition_ptr`**(const *esp_partition_t* *partition)

Erase custom partition.

Erase all content of specified custom partition.

Note: If the partition is initialized, this function first de-initializes it. Afterwards, the partition has to be initialized again to be used.

Parameters **`partition`** –**[in]** pointer to a partition obtained by the ESP partition API.

Returns

- ESP_OK on success
- ESP_ERR_NOT_FOUND if there is no partition with the specified parameters in the partition table
- ESP_ERR_INVALID_ARG in case partition is NULL
- one of the error codes from the underlying flash storage driver

esp_err_t **`nvs_flash_secure_init`**(*nvs_sec_cfg_t* *cfg)

Initialize the default NVS partition.

This API initialises the default NVS partition. The default NVS partition is the one that is labeled "nvs" in the partition table.

Parameters **`cfg`** –**[in]** Security configuration (keys) to be used for NVS encryption/decryption. If cfg is NULL, no encryption is used.

Returns

- ESP_OK if storage has been initialized successfully.
- ESP_ERR_NVS_NO_FREE_PAGES if the NVS storage contains no empty pages (which may happen if NVS partition was truncated)
- ESP_ERR_NOT_FOUND if no partition with label "nvs" is found in the partition table
- ESP_ERR_NO_MEM in case memory could not be allocated for the internal structures
- one of the error codes from the underlying flash storage driver

esp_err_t **`nvs_flash_secure_init_partition`**(const char *partition_label, *nvs_sec_cfg_t* *cfg)

Initialize NVS flash storage for the specified partition.

Parameters

- **`partition_label`** –**[in]** Label of the partition. Note that internally, a reference to passed value is kept and it should be accessible for future operations
- **`cfg`** –**[in]** Security configuration (keys) to be used for NVS encryption/decryption. If cfg is null, no encryption/decryption is used.

Returns

- ESP_OK if storage has been initialized successfully.
- ESP_ERR_NVS_NO_FREE_PAGES if the NVS storage contains no empty pages (which may happen if NVS partition was truncated)
- ESP_ERR_NOT_FOUND if specified partition is not found in the partition table
- ESP_ERR_NO_MEM in case memory could not be allocated for the internal structures

- one of the error codes from the underlying flash storage driver

esp_err_t **nvs_flash_generate_keys**(const *esp_partition_t* *partition, *nvs_sec_cfg_t* *cfg)

Generate and store NVS keys in the provided esp partition.

Parameters

- **partition** –**[in]** Pointer to partition structure obtained using esp_partition_find_first or esp_partition_get. Must be non-NULL.
- **cfg** –**[out]** Pointer to nvs security configuration structure. Pointer must be non-NULL. Generated keys will be populated in this structure.

Returns -ESP_OK, if cfg was read successfully; -ESP_INVALID_ARG, if partition or cfg; -or error codes from esp_partition_write/erase APIs.

esp_err_t **nvs_flash_read_security_cfg**(const *esp_partition_t* *partition, *nvs_sec_cfg_t* *cfg)

Read NVS security configuration from a partition.

Note: Provided partition is assumed to be marked ‘encrypted’.

Parameters

- **partition** –**[in]** Pointer to partition structure obtained using esp_partition_find_first or esp_partition_get. Must be non-NULL.
- **cfg** –**[out]** Pointer to nvs security configuration structure. Pointer must be non-NULL.

Returns -ESP_OK, if cfg was read successfully; -ESP_INVALID_ARG, if partition or cfg; -ESP_ERR_NVS_KEYS_NOT_INITIALIZED, if the partition is not yet written with keys. -ESP_ERR_NVS_CORRUPT_KEY_PART, if the partition containing keys is found to be corrupt -or error codes from esp_partition_read API.

Structures

struct **nvs_sec_cfg_t**

Key for encryption and decryption.

Public Members

uint8_t **eky**[32]

XTS encryption and decryption key

uint8_t **tky**[32]

XTS tweak key

Macros

NVS_KEY_SIZE

Header File

- components/nvs_flash/include/nvs.h

Functions

esp_err_t **nvs_set_i8**(*nvs_handle_t* handle, const char *key, int8_t value)

set int8_t value for given key

Set value for the key, given its name. Note that the actual storage will not be updated until `nvs_commit` is called.

Parameters

- **handle** –**[in]** Handle obtained from nvs_open function. Handles that were opened read only cannot be used.
- **key** –**[in]** Key name. Maximal length is (NVS_KEY_NAME_MAX_SIZE-1) characters. Shouldn't be empty.
- **value** –**[in]** The value to set.

Returns

- ESP_OK if value was set successfully
- ESP_FAIL if there is an internal error; most likely due to corrupted NVS partition (only if NVS assertion checks are disabled)
- ESP_ERR_NVS_INVALID_HANDLE if handle has been closed or is NULL
- ESP_ERR_NVS_READ_ONLY if storage handle was opened as read only
- ESP_ERR_NVS_INVALID_NAME if key name doesn't satisfy constraints
- ESP_ERR_NVS_NOT_ENOUGH_SPACE if there is not enough space in the underlying storage to save the value
- ESP_ERR_NVS_REMOVE_FAILED if the value wasn't updated because flash write operation has failed. The value was written however, and update will be finished after re-initialization of nvs, provided that flash operation doesn't fail again.

esp_err_t **nvs_set_u8** (*nvs_handle_t* handle, const char *key, uint8_t value)

set uint8_t value for given key

This function is the same as `nvs_set_i8` except for the data type.

esp_err_t **nvs_set_i16** (*nvs_handle_t* handle, const char *key, int16_t value)

set int16_t value for given key

This function is the same as `nvs_set_i8` except for the data type.

esp_err_t **nvs_set_u16** (*nvs_handle_t* handle, const char *key, uint16_t value)

set uint16_t value for given key

This function is the same as `nvs_set_i8` except for the data type.

esp_err_t **nvs_set_i32** (*nvs_handle_t* handle, const char *key, int32_t value)

set int32_t value for given key

This function is the same as `nvs_set_i8` except for the data type.

esp_err_t **nvs_set_u32** (*nvs_handle_t* handle, const char *key, uint32_t value)

set uint32_t value for given key

This function is the same as `nvs_set_i8` except for the data type.

esp_err_t **nvs_set_i64** (*nvs_handle_t* handle, const char *key, int64_t value)

set int64_t value for given key

This function is the same as `nvs_set_i8` except for the data type.

esp_err_t **nvs_set_u64** (*nvs_handle_t* handle, const char *key, uint64_t value)

set uint64_t value for given key

This function is the same as `nvs_set_i8` except for the data type.

esp_err_t **nvs_set_str** (*nvs_handle_t* handle, const char *key, const char *value)

set string for given key

Set value for the key, given its name. Note that the actual storage will not be updated until `nvs_commit` is called.

Parameters

- **handle** –**[in]** Handle obtained from nvs_open function. Handles that were opened read only cannot be used.
- **key** –**[in]** Key name. Maximal length is (NVS_KEY_NAME_MAX_SIZE-1) characters. Shouldn't be empty.

- **value** –**[in]** The value to set. For strings, the maximum length (including null character) is 4000 bytes, if there is one complete page free for writing. This decreases, however, if the free space is fragmented.

Returns

- ESP_OK if value was set successfully
- ESP_ERR_NVS_INVALID_HANDLE if handle has been closed or is NULL
- ESP_ERR_NVS_READ_ONLY if storage handle was opened as read only
- ESP_ERR_NVS_INVALID_NAME if key name doesn't satisfy constraints
- ESP_ERR_NVS_NOT_ENOUGH_SPACE if there is not enough space in the underlying storage to save the value
- ESP_ERR_NVS_REMOVE_FAILED if the value wasn't updated because flash write operation has failed. The value was written however, and update will be finished after re-initialization of nvs, provided that flash operation doesn't fail again.
- ESP_ERR_NVS_VALUE_TOO_LONG if the string value is too long

esp_err_t **nvs_get_i8** (*nvs_handle_t* handle, const char *key, int8_t *out_value)

get int8_t value for given key

These functions retrieve value for the key, given its name. If `key` does not exist, or the requested variable type doesn't match the type which was used when setting a value, an error is returned.

In case of any error, out_value is not modified.

`out_value` has to be a pointer to an already allocated variable of the given type.

```
// Example of using nvs_get_i32:
int32_t max_buffer_size = 4096; // default value
esp_err_t err = nvs_get_i32(my_handle, "max_buffer_size", &max_buffer_size);
assert(err == ESP_OK || err == ESP_ERR_NVS_NOT_FOUND);
// if ESP_ERR_NVS_NOT_FOUND was returned, max_buffer_size will still
// have its default value.
```

Parameters

- **handle** –**[in]** Handle obtained from nvs_open function.
- **key** –**[in]** Key name. Maximal length is (NVS_KEY_NAME_MAX_SIZE-1) characters. Shouldn't be empty.
- **out_value** –Pointer to the output value. May be NULL for nvs_get_str and nvs_get_blob, in this case required length will be returned in length argument.

Returns

- ESP_OK if the value was retrieved successfully
- ESP_FAIL if there is an internal error; most likely due to corrupted NVS partition (only if NVS assertion checks are disabled)
- ESP_ERR_NVS_NOT_FOUND if the requested key doesn't exist
- ESP_ERR_NVS_INVALID_HANDLE if handle has been closed or is NULL
- ESP_ERR_NVS_INVALID_NAME if key name doesn't satisfy constraints
- ESP_ERR_NVS_INVALID_LENGTH if length is not sufficient to store data

esp_err_t **nvs_get_u8** (*nvs_handle_t* handle, const char *key, uint8_t *out_value)

get uint8_t value for given key

This function is the same as `nvs_get_i8` except for the data type.

esp_err_t **nvs_get_i16** (*nvs_handle_t* handle, const char *key, int16_t *out_value)

get int16_t value for given key

This function is the same as `nvs_get_i8` except for the data type.

esp_err_t **nvs_get_u16** (*nvs_handle_t* handle, const char *key, uint16_t *out_value)

get uint16_t value for given key

This function is the same as `nvs_get_i8` except for the data type.

esp_err_t **nvs_get_i32** (*nvs_handle_t* handle, const char *key, int32_t *out_value)

get int32_t value for given key

This function is the same as `nvs_get_i8` except for the data type.

esp_err_t **nvs_get_u32** (*nvs_handle_t* handle, const char *key, uint32_t *out_value)

get uint32_t value for given key

This function is the same as `nvs_get_i8` except for the data type.

esp_err_t **nvs_get_i64** (*nvs_handle_t* handle, const char *key, int64_t *out_value)

get int64_t value for given key

This function is the same as `nvs_get_i8` except for the data type.

esp_err_t **nvs_get_u64** (*nvs_handle_t* handle, const char *key, uint64_t *out_value)

get uint64_t value for given key

This function is the same as `nvs_get_i8` except for the data type.

esp_err_t **nvs_get_str** (*nvs_handle_t* handle, const char *key, char *out_value, size_t *length)

get string value for given key

These functions retrieve the data of an entry, given its key. If key does not exist, or the requested variable type doesn't match the type which was used when setting a value, an error is returned.

In case of any error, out_value is not modified.

All functions expect out_value to be a pointer to an already allocated variable of the given type.

nvs_get_str and nvs_get_blob functions support WinAPI-style length queries. To get the size necessary to store the value, call nvs_get_str or nvs_get_blob with zero out_value and non-zero pointer to length. Variable pointed to by length argument will be set to the required length. For nvs_get_str, this length includes the zero terminator. When calling nvs_get_str and nvs_get_blob with non-zero out_value, length has to be non-zero and has to point to the length available in out_value. It is suggested that nvs_get/set_str is used for zero-terminated C strings, and nvs_get/set_blob used for arbitrary data structures.

```
// Example (without error checking) of using nvs_get_str to get a string into␣
↪dynamic array:
size_t required_size;
nvs_get_str(my_handle, "server_name", NULL, &required_size);
char* server_name = malloc(required_size);
nvs_get_str(my_handle, "server_name", server_name, &required_size);

// Example (without error checking) of using nvs_get_blob to get a binary data
into a static array:
uint8_t mac_addr[6];
size_t size = sizeof(mac_addr);
nvs_get_blob(my_handle, "dst_mac_addr", mac_addr, &size);
```

Parameters

- **handle** –**[in]** Handle obtained from nvs_open function.
- **key** –**[in]** Key name. Maximal length is (NVS_KEY_NAME_MAX_SIZE-1) characters. Shouldn't be empty.
- **out_value** –**[out]** Pointer to the output value. May be NULL for nvs_get_str and nvs_get_blob, in this case required length will be returned in length argument.
- **length** –**[inout]** A non-zero pointer to the variable holding the length of out_value. In case out_value a zero, will be set to the length required to hold the value. In case out_value is not zero, will be set to the actual length of the value written. For nvs_get_str this includes zero terminator.

Returns

- ESP_OK if the value was retrieved successfully

- ESP_FAIL if there is an internal error; most likely due to corrupted NVS partition (only if NVS assertion checks are disabled)
- ESP_ERR_NVS_NOT_FOUND if the requested key doesn't exist
- ESP_ERR_NVS_INVALID_HANDLE if handle has been closed or is NULL
- ESP_ERR_NVS_INVALID_NAME if key name doesn't satisfy constraints
- ESP_ERR_NVS_INVALID_LENGTH if `length` is not sufficient to store data

esp_err_t **nvs_get_blob**(*nvs_handle_t* handle, const char *key, void *out_value, size_t *length)

get blob value for given key

This function behaves the same as `nvs_get_str`, except for the data type.

esp_err_t **nvs_open**(const char *name, *nvs_open_mode_t* open_mode, *nvs_handle_t* *out_handle)

Open non-volatile storage with a given namespace from the default NVS partition.

Multiple internal ESP-IDF and third party application modules can store their key-value pairs in the NVS module. In order to reduce possible conflicts on key names, each module can use its own namespace. The default NVS partition is the one that is labelled "nvs" in the partition table.

Parameters

- **name** – **[in]** Namespace name. Maximal length is (NVS_KEY_NAME_MAX_SIZE-1) characters. Shouldn't be empty.
- **open_mode** – **[in]** NVS_READWRITE or NVS_READONLY. If NVS_READONLY, will open a handle for reading only. All write requests will be rejected for this handle.
- **out_handle** – **[out]** If successful (return code is zero), handle will be returned in this argument.

Returns

- ESP_OK if storage handle was opened successfully
- ESP_FAIL if there is an internal error; most likely due to corrupted NVS partition (only if NVS assertion checks are disabled)
- ESP_ERR_NVS_NOT_INITIALIZED if the storage driver is not initialized
- ESP_ERR_NVS_PART_NOT_FOUND if the partition with label "nvs" is not found
- ESP_ERR_NVS_NOT_FOUND id namespace doesn't exist yet and mode is NVS_READONLY
- ESP_ERR_NVS_INVALID_NAME if namespace name doesn't satisfy constraints
- ESP_ERR_NO_MEM in case memory could not be allocated for the internal structures
- ESP_ERR_NVS_NOT_ENOUGH_SPACE if there is no space for a new entry or there are too many different namespaces (maximum allowed different namespaces: 254)
- other error codes from the underlying storage driver

esp_err_t **nvs_open_from_partition**(const char *part_name, const char *name, *nvs_open_mode_t* open_mode, *nvs_handle_t* *out_handle)

Open non-volatile storage with a given namespace from specified partition.

The behaviour is same as nvs_open() API. However this API can operate on a specified NVS partition instead of default NVS partition. Note that the specified partition must be registered with NVS using nvs_flash_init_partition() API.

Parameters

- **part_name** – **[in]** Label (name) of the partition of interest for object read/write/erase
- **name** – **[in]** Namespace name. Maximal length is (NVS_KEY_NAME_MAX_SIZE-1) characters. Shouldn't be empty.
- **open_mode** – **[in]** NVS_READWRITE or NVS_READONLY. If NVS_READONLY, will open a handle for reading only. All write requests will be rejected for this handle.
- **out_handle** – **[out]** If successful (return code is zero), handle will be returned in this argument.

Returns

- ESP_OK if storage handle was opened successfully
- ESP_FAIL if there is an internal error; most likely due to corrupted NVS partition (only if NVS assertion checks are disabled)
- ESP_ERR_NVS_NOT_INITIALIZED if the storage driver is not initialized

- ESP_ERR_NVS_PART_NOT_FOUND if the partition with specified name is not found
- ESP_ERR_NVS_NOT_FOUND id namespace doesn't exist yet and mode is NVS_READONLY
- ESP_ERR_NVS_INVALID_NAME if namespace name doesn't satisfy constraints
- ESP_ERR_NO_MEM in case memory could not be allocated for the internal structures
- ESP_ERR_NVS_NOT_ENOUGH_SPACE if there is no space for a new entry or there are too many different namespaces (maximum allowed different namespaces: 254)
- other error codes from the underlying storage driver

esp_err_t **nvs_set_blob** (*nvs_handle_t* handle, const char *key, const void *value, size_t length)

set variable length binary value for given key

This family of functions set value for the key, given its name. Note that actual storage will not be updated until nvs_commit function is called.

Parameters

- **handle** –**[in]** Handle obtained from nvs_open function. Handles that were opened read only cannot be used.
- **key** –**[in]** Key name. Maximal length is (NVS_KEY_NAME_MAX_SIZE-1) characters. Shouldn't be empty.
- **value** –**[in]** The value to set.
- **length** –**[in]** length of binary value to set, in bytes; Maximum length is 508000 bytes or (97.6% of the partition size - 4000) bytes whichever is lower.

Returns

- ESP_OK if value was set successfully
- ESP_FAIL if there is an internal error; most likely due to corrupted NVS partition (only if NVS assertion checks are disabled)
- ESP_ERR_NVS_INVALID_HANDLE if handle has been closed or is NULL
- ESP_ERR_NVS_READ_ONLY if storage handle was opened as read only
- ESP_ERR_NVS_INVALID_NAME if key name doesn't satisfy constraints
- ESP_ERR_NVS_NOT_ENOUGH_SPACE if there is not enough space in the underlying storage to save the value
- ESP_ERR_NVS_REMOVE_FAILED if the value wasn't updated because flash write operation has failed. The value was written however, and update will be finished after re-initialization of nvs, provided that flash operation doesn't fail again.
- ESP_ERR_NVS_VALUE_TOO_LONG if the value is too long

esp_err_t **nvs_erase_key** (*nvs_handle_t* handle, const char *key)

Erase key-value pair with given key name.

Note that actual storage may not be updated until nvs_commit function is called.

Parameters

- **handle** –**[in]** Storage handle obtained with nvs_open. Handles that were opened read only cannot be used.
- **key** –**[in]** Key name. Maximal length is (NVS_KEY_NAME_MAX_SIZE-1) characters. Shouldn't be empty.

Returns

- ESP_OK if erase operation was successful
- ESP_FAIL if there is an internal error; most likely due to corrupted NVS partition (only if NVS assertion checks are disabled)
- ESP_ERR_NVS_INVALID_HANDLE if handle has been closed or is NULL
- ESP_ERR_NVS_READ_ONLY if handle was opened as read only
- ESP_ERR_NVS_NOT_FOUND if the requested key doesn't exist
- other error codes from the underlying storage driver

esp_err_t **nvs_erase_all** (*nvs_handle_t* handle)

Erase all key-value pairs in a namespace.

Note that actual storage may not be updated until nvs_commit function is called.

Parameters **handle** –**[in]** Storage handle obtained with nvs_open. Handles that were opened read only cannot be used.

Returns

- ESP_OK if erase operation was successful
- ESP_FAIL if there is an internal error; most likely due to corrupted NVS partition (only if NVS assertion checks are disabled)
- ESP_ERR_NVS_INVALID_HANDLE if handle has been closed or is NULL
- ESP_ERR_NVS_READ_ONLY if handle was opened as read only
- other error codes from the underlying storage driver

esp_err_t **nvs_commit** (*nvs_handle_t* handle)

Write any pending changes to non-volatile storage.

After setting any values, nvs_commit() must be called to ensure changes are written to non-volatile storage. Individual implementations may write to storage at other times, but this is not guaranteed.

Parameters **handle** –**[in]** Storage handle obtained with nvs_open. Handles that were opened read only cannot be used.

Returns

- ESP_OK if the changes have been written successfully
- ESP_ERR_NVS_INVALID_HANDLE if handle has been closed or is NULL
- other error codes from the underlying storage driver

void **nvs_close** (*nvs_handle_t* handle)

Close the storage handle and free any allocated resources.

This function should be called for each handle opened with nvs_open once the handle is not in use any more. Closing the handle may not automatically write the changes to nonvolatile storage. This has to be done explicitly using nvs_commit function. Once this function is called on a handle, the handle should no longer be used.

Parameters **handle** –**[in]** Storage handle to close

esp_err_t **nvs_get_stats** (const char *part_name, *nvs_stats_t* *nvs_stats)

Fill structure *nvs_stats_t*. It provides info about used memory the partition.

This function calculates to runtime the number of used entries, free entries, total entries, and amount namespace in partition.

```
// Example of nvs_get_stats() to get the number of used entries and free␣
↪entries:
nvs_stats_t nvs_stats;
nvs_get_stats(NULL, &nvs_stats);
printf("Count: UsedEntries = (%d), FreeEntries = (%d), AllEntries = (%d)\n",
       nvs_stats.used_entries, nvs_stats.free_entries, nvs_stats.total_
↪entries);
```

Parameters

- **part_name** –**[in]** Partition name NVS in the partition table. If pass a NULL than will use NVS_DEFAULT_PART_NAME (“nvs”).
- **nvs_stats** –**[out]** Returns filled structure nvs_states_t. It provides info about used memory the partition.

Returns

- ESP_OK if the changes have been written successfully. Return param nvs_stats will be filled.
- ESP_ERR_NVS_PART_NOT_FOUND if the partition with label “name” is not found. Return param nvs_stats will be filled 0.
- ESP_ERR_NVS_NOT_INITIALIZED if the storage driver is not initialized. Return param nvs_stats will be filled 0.
- ESP_ERR_INVALID_ARG if nvs_stats equal to NULL.

- ESP_ERR_INVALID_STATE if there is page with the status of INVALID. Return param nvs_stats will be filled not with correct values because not all pages will be counted. Counting will be interrupted at the first INVALID page.

esp_err_t **nvs_get_used_entry_count** (*nvs_handle_t* handle, size_t *used_entries)

Calculate all entries in a namespace.

An entry represents the smallest storage unit in NVS. Strings and blobs may occupy more than one entry. Note that to find out the total number of entries occupied by the namespace, add one to the returned value used_entries (if err is equal to ESP_OK). Because the name space entry takes one entry.

```
// Example of nvs_get_used_entry_count() to get amount of all key-value pairs␣
↪in one namespace:
nvs_handle_t handle;
nvs_open("namespace1", NVS_READWRITE, &handle);
...
size_t used_entries;
size_t total_entries_namespace;
if(nvs_get_used_entry_count(handle, &used_entries) == ESP_OK){
    // the total number of entries occupied by the namespace
    total_entries_namespace = used_entries + 1;
}
```

Parameters

- **handle** –**[in]** Handle obtained from nvs_open function.
- **used_entries** –**[out]** Returns amount of used entries from a namespace.

Returns

- ESP_OK if the changes have been written successfully. Return param used_entries will be filled valid value.
- ESP_ERR_NVS_NOT_INITIALIZED if the storage driver is not initialized. Return param used_entries will be filled 0.
- ESP_ERR_NVS_INVALID_HANDLE if handle has been closed or is NULL. Return param used_entries will be filled 0.
- ESP_ERR_INVALID_ARG if used_entries equal to NULL.
- Other error codes from the underlying storage driver. Return param used_entries will be filled 0.

nvs_iterator_t **nvs_entry_find** (const char *part_name, const char *namespace_name, *nvs_type_t* type)

Create an iterator to enumerate NVS entries based on one or more parameters.

```
// Example of listing all the key-value pairs of any type under specified␣
↪partition and namespace
nvs_iterator_t it = nvs_entry_find(partition, namespace, NVS_TYPE_ANY);
while (it != NULL) {
        nvs_entry_info_t info;
        nvs_entry_info(it, &info);
        it = nvs_entry_next(it);
        printf("key '%s', type '%d' \n", info.key, info.type);
};
// Note: no need to release iterator obtained from nvs_entry_find function when
//       nvs_entry_find or nvs_entry_next function return NULL, indicating no␣
↪other
//       element for specified criteria was found.
}
```

Parameters

- **part_name** –**[in]** Partition name

- **namespace_name** –**[in]** Set this value if looking for entries with a specific namespace. Pass NULL otherwise.
- **type** –**[in]** One of nvs_type_t values.

Returns Iterator used to enumerate all the entries found, or NULL if no entry satisfying criteria was found. Iterator obtained through this function has to be released using nvs_release_iterator when not used any more.

nvs_iterator_t **nvs_entry_next** (*nvs_iterator_t* iterator)

Returns next item matching the iterator criteria, NULL if no such item exists.

Note that any copies of the iterator will be invalid after this call.

Parameters **iterator** –**[in]** Iterator obtained from nvs_entry_find function. Must be non-NULL.

Returns NULL if no entry was found, valid nvs_iterator_t otherwise.

void **nvs_entry_info** (*nvs_iterator_t* iterator, *nvs_entry_info_t* *out_info)

Fills *nvs_entry_info_t* structure with information about entry pointed to by the iterator.

Parameters

- **iterator** –**[in]** Iterator obtained from nvs_entry_find or nvs_entry_next function. Must be non-NULL.
- **out_info** –**[out]** Structure to which entry information is copied.

void **nvs_release_iterator** (*nvs_iterator_t* iterator)

Release iterator.

Parameters **iterator** –**[in]** Release iterator obtained from nvs_entry_find function. NULL argument is allowed.

Structures

struct **nvs_entry_info_t**

information about entry obtained from nvs_entry_info function

Public Members

char **namespace_name**[16]

Namespace to which key-value belong

char **key**[16]

Key of stored key-value pair

nvs_type_t **type**

Type of stored key-value pair

struct **nvs_stats_t**

Note: Info about storage space NVS.

Public Members

size_t **used_entries**

Amount of used entries.

size_t **free_entries**

Amount of free entries.

size_t **total_entries**

Amount all available entries.

size_t **namespace_count**

Amount name space.

Macros

ESP_ERR_NVS_BASE

Starting number of error codes

ESP_ERR_NVS_NOT_INITIALIZED

The storage driver is not initialized

ESP_ERR_NVS_NOT_FOUND

Id namespace doesn't exist yet and mode is NVS_READONLY

ESP_ERR_NVS_TYPE_MISMATCH

The type of set or get operation doesn't match the type of value stored in NVS

ESP_ERR_NVS_READ_ONLY

Storage handle was opened as read only

ESP_ERR_NVS_NOT_ENOUGH_SPACE

There is not enough space in the underlying storage to save the value

ESP_ERR_NVS_INVALID_NAME

Namespace name doesn't satisfy constraints

ESP_ERR_NVS_INVALID_HANDLE

Handle has been closed or is NULL

ESP_ERR_NVS_REMOVE_FAILED

The value wasn't updated because flash write operation has failed. The value was written however, and update will be finished after re-initialization of nvs, provided that flash operation doesn't fail again.

ESP_ERR_NVS_KEY_TOO_LONG

Key name is too long

ESP_ERR_NVS_PAGE_FULL

Internal error; never returned by nvs API functions

ESP_ERR_NVS_INVALID_STATE

NVS is in an inconsistent state due to a previous error. Call nvs_flash_init and nvs_open again, then retry.

ESP_ERR_NVS_INVALID_LENGTH

String or blob length is not sufficient to store data

ESP_ERR_NVS_NO_FREE_PAGES

NVS partition doesn't contain any empty pages. This may happen if NVS partition was truncated. Erase the whole partition and call nvs_flash_init again.

ESP_ERR_NVS_VALUE_TOO_LONG

Value doesn't fit into the entry or string or blob length is longer than supported by the implementation

ESP_ERR_NVS_PART_NOT_FOUND

Partition with specified name is not found in the partition table

ESP_ERR_NVS_NEW_VERSION_FOUND

NVS partition contains data in new format and cannot be recognized by this version of code

ESP_ERR_NVS_XTS_ENCR_FAILED

XTS encryption failed while writing NVS entry

ESP_ERR_NVS_XTS_DECR_FAILED

XTS decryption failed while reading NVS entry

ESP_ERR_NVS_XTS_CFG_FAILED

XTS configuration setting failed

ESP_ERR_NVS_XTS_CFG_NOT_FOUND

XTS configuration not found

ESP_ERR_NVS_ENCR_NOT_SUPPORTED

NVS encryption is not supported in this version

ESP_ERR_NVS_KEYS_NOT_INITIALIZED

NVS key partition is uninitialized

ESP_ERR_NVS_CORRUPT_KEY_PART

NVS key partition is corrupt

ESP_ERR_NVS_WRONG_ENCRYPTION

NVS partition is marked as encrypted with generic flash encryption. This is forbidden since the NVS encryption works differently.

ESP_ERR_NVS_CONTENT_DIFFERS

Internal error; never returned by nvs API functions. NVS key is different in comparison

NVS_DEFAULT_PART_NAME

Default partition name of the NVS partition in the partition table

NVS_PART_NAME_MAX_SIZE

maximum length of partition name (excluding null terminator)

NVS_KEY_NAME_MAX_SIZE

Maximal length of NVS key name (including null terminator)

Type Definitions

typedef uint32_t **nvs_handle_t**

Opaque pointer type representing non-volatile storage handle

typedef *nvs_handle_t* **nvs_handle**

typedef *nvs_open_mode_t* **nvs_open_mode**

typedef struct nvs_opaque_iterator_t ***nvs_iterator_t**

Opaque pointer type representing iterator to nvs entries

Enumerations

enum **nvs_open_mode_t**

Mode of opening the non-volatile storage.

Values:

enumerator **NVS_READONLY**

Read only

enumerator **NVS_READWRITE**

Read and write

enum **nvs_type_t**

Types of variables.

Values:

enumerator **NVS_TYPE_U8**

Type uint8_t

enumerator **NVS_TYPE_I8**

Type int8_t

enumerator **NVS_TYPE_U16**

Type uint16_t

enumerator **NVS_TYPE_I16**

Type int16_t

enumerator **NVS_TYPE_U32**

Type uint32_t

enumerator **NVS_TYPE_I32**

Type int32_t

enumerator **NVS_TYPE_U64**

Type uint64_t

enumerator **NVS_TYPE_I64**

Type int64_t

enumerator **NVS_TYPE_STR**

Type string

enumerator **NVS_TYPE_BLOB**

Type blob

enumerator **NVS_TYPE_ANY**

Must be last

2.6.4 NVS Partition Generator Utility

Introduction

The utility nvs_flash/nvs_partition_generator/nvs_partition_gen.py creates a binary file based on key-value pairs provided in a CSV file. The binary file is compatible with NVS architecture defined in *Non-Volatile Storage*. This utility is ideally suited for generating a binary blob, containing data specific to ODM/OEM, which can be flashed externally at the time of device manufacturing. This allows manufacturers to generate many instances of the same application firmware with customized parameters for each device, such as a serial number.

Prerequisites

To use this utility in encryption mode, install the following packages:

- cryptography package

All the required packages are included in *requirements.txt* in the root of the esp-idf directory.

CSV file format

Each line of a .csv file should contain 4 parameters, separated by a comma. The table below provides the description for each of these parameters.

No.	Parameter	Description	Notes
1	Key	Key of the data. The data can be accessed later from an application using this key.	
2	Type	Supported values are `file`, `data` and `namespace`.	
3	Encoding	Supported values are: `u8`, `i8`, `u16`, `i16`, `u32`, `i32`, `u64`, `i64`, `string`, `hex2bin`, `base64` and `binary`. This specifies how actual data values are encoded in the resulting binary file. The difference between the `string` and `binary` encoding is that `string` data is terminated with a NULL character, whereas `binary` data is not.	As of now, for the `file` type, only `hex2bin`, `base64`, `string`, and `binary` encoding is supported.
4	Value	Data value.	Encoding and Value cells for the `namespace` field type should be empty. Encoding and Value of `namespace` is fixed and is not configurable. Any values in these cells are ignored.

Note: The first line of the CSV file should always be the column header and it is not configurable.

Below is an example dump of such a CSV file:

```
key,type,encoding,value      <-- column header
namespace_name,namespace,,   <-- First entry should be of type "namespace"
key1,data,u8,1
key2,file,string,/path/to/file
```

Note:

Make sure there are no spaces:

- before and after ‘,’
- at the end of each line in a CSV file

NVS Entry and Namespace association

When a namespace entry is encountered in a CSV file, each following entry will be treated as part of that namespace until the next namespace entry is found. At this point, all the following entries will be treated as part of the new namespace.

Note: First entry in a CSV file should always be a `namespace` entry.

Multipage Blob Support

By default, binary blobs are allowed to span over multiple pages and are written in the format mentioned in Section *Structure of entry*. If you intend to use an older format, the utility provides an option to disable this feature.

Encryption Support

The NVS Partition Generator utility also allows you to create an encrypted binary file. The utility uses the AES-XTS encryption. Please refer to *NVS Encryption* for more details.

Decryption Support

This utility allows you to decrypt an encrypted NVS binary file. The utility uses an NVS binary file encrypted using AES-XTS encryption. Please refer to *NVS Encryption* for more details.

Running the utility

Usage:

```
python nvs_partition_gen.py [-h] {generate,generate-key,encrypt,decrypt} ...

Optional Arguments:
+-----+------------+-------------------------------------------------------------------
↪-------+
| No. | Parameter  |                            Description                            ␣
↪       |
+=====+============+===================================================================================+
| 1   | -h, --help |        show this help message and exit                            ␣
↪       |
+-----+------------+-------------------------------------------------------------------
↪-------+

Commands:
        Run nvs_partition_gen.py {command} -h for additional help
+-----+--------------+-------------------------------------------------------------------
↪-------+
| No. | Parameter    |                              Description                          ␣
↪       |
+=====+==============+===================================================================================+
| 1   | generate     |      Generate NVS partition                                       ␣
↪       |
+-----+--------------+-------------------------------------------------------------------
↪-------+
| 2   | generate-key |      Generate keys for encryption                                 ␣
↪       |
+-----+--------------+-------------------------------------------------------------------
↪-------+
| 3   |  encrypt     |      Generate NVS encrypted partition                             ␣
↪       |
+-----+--------------+-------------------------------------------------------------------
↪-------+
| 4   |  decrypt     |      Decrypt NVS encrypted partition                              ␣
↪       |
+-----+--------------+-------------------------------------------------------------------
↪-------+
```

To generate NVS partition (Default):

Usage:

```
python nvs_partition_gen.py generate [-h] [--version {1,2}] [--outdir␣
↪OUTDIR]
                                     input output size
```

(continues on next page)

(continued from previous page)

```
Positional Arguments:
+--------------+-------------------------------------------------------------
↪------------+
| Parameter    |                          Description                        ␣
↪            |
+==============+=============================================================================+
| input        |        Path to CSV file to parse                            ␣
↪            |
+--------------+-------------------------------------------------------------
↪------------+
| output       |        Path to output NVS binary file                       ␣
↪            |
+--------------+-------------------------------------------------------------
↪------------+
| size         |        Size of NVS partition in bytes (must be multiple␣
↪of 4096)     |
+--------------+-------------------------------------------------------------
↪------------+


Optional Arguments:
+-----------------+-------------------------------------------------------------
↪-------------+
| Parameter       |                          Description                        ␣
↪             |
+=================+=============================================================================+
| -h, --help      |     show this help message and exit                         ␣
↪             |
+-----------------+-------------------------------------------------------------
↪-------------+
| --version {1,2} |     Set multipage blob version.                             ␣
↪             |
|                 |     Version 1 - Multipage blob support disabled.            ␣
↪             |
|                 |     Version 2 - Multipage blob support enabled.             ␣
↪             |
|                 |     Default: Version 2                                      ␣
↪             |
|                 |                                                             ␣
↪             |
+-----------------+-------------------------------------------------------------
↪-------------+
| --outdir OUTDIR |     Output directory to store files created                 ␣
↪             |
|                 |     (Default: current directory)                            ␣
↪             |
+-----------------+-------------------------------------------------------------
↪-------------+
```

You can run the utility to generate NVS partition using the command below: A sample CSV file is provided with the utility:

```
python nvs_partition_gen.py generate sample_singlepage_blob.csv sample.bin 0x3000
```

To generate only encryption keys:

Usage:

```
python nvs_partition_gen.py generate-key [-h] [--keyfile KEYFILE]
                                         [--outdir OUTDIR]
```

(continues on next page)

(continued from previous page)

```
Optional Arguments:
+--------------------+-----------------------------------------------------
↪------------------+
| Parameter          |                          Description              ␣
↪                  |
+====================+=========================================================+
| -h, --help         |      show this help message and exit              ␣
↪                  |
+--------------------+-----------------------------------------------------
↪------------------+
| --keyfile KEYFILE  |      Path to output encryption keys file          ␣
↪                  |
+--------------------+-----------------------------------------------------
↪------------------+
| --outdir OUTDIR    |      Output directory to store files created.     ␣
↪                  |
|                    |      (Default: current directory)                 ␣
↪                  |
+--------------------+-----------------------------------------------------
↪------------------+
```

You can run the utility to generate only encryption keys using the command below:

```
python nvs_partition_gen.py generate-key
```

To generate encrypted NVS partition:

Usage:

```
python nvs_partition_gen.py encrypt [-h] [--version {1,2}] [--keygen]
                                    [--keyfile KEYFILE] [--inputkey␣
↪INPUTKEY]
                                    [--outdir OUTDIR]
                                    input output size

Positional Arguments:
+--------------+-----------------------------------------------------------
↪------------+
| Parameter    |                          Description                     ␣
↪            |
+==============+=========================================================+
| input        |        Path to CSV file to parse                         ␣
↪            |
+--------------+-----------------------------------------------------------
↪------------+
| output       |        Path to output NVS binary file                    ␣
↪            |
+--------------+-----------------------------------------------------------
↪------------+
| size         |        Size of NVS partition in bytes (must be multiple␣
↪of 4096)     |
+--------------+-----------------------------------------------------------
↪------------+


Optional Arguments:
+--------------------+-----------------------------------------------------
↪------------------+
| Parameter          |                          Description              ␣
↪                  |
```

(continues on next page)

(continued from previous page)

```
+====================+=================================================================+
| -h, --help         |     show this help message and exit                          ␣
↪                 |
|                    |                                                               ␣
↪                 |
+--------------------+-----------------------------------------------------------
↪-----------------+
| --version {1,2}    |     Set multipage blob version.                               ␣
↪                 |
|                    |     Version 1 - Multipage blob support disabled.              ␣
↪                 |
|                    |     Version 2 - Multipage blob support enabled.               ␣
↪                 |
|                    |     Default: Version 2                                        ␣
↪                 |
+--------------------+-----------------------------------------------------------
↪-----------------+
| --keygen           |     Generates key for encrypting NVS partition                ␣
↪                 |
+--------------------+-----------------------------------------------------------
↪-----------------+
| --keyfile KEYFILE  |     Path to output encryption keys file                       ␣
↪                 |
+--------------------+-----------------------------------------------------------
↪-----------------+
| --inputkey INPUTKEY |     File having key for encrypting NVS partition              ␣
↪                 |
+--------------------+-----------------------------------------------------------
↪-----------------+
| --outdir OUTDIR    |     Output directory to store files created                   ␣
↪                 |
|                    |     (Default: current directory)                              ␣
↪                 |
+--------------------+-----------------------------------------------------------
↪-----------------+
```

You can run the utility to encrypt NVS partition using the command below: A sample CSV file is provided with the utility:

- Encrypt by allowing the utility to generate encryption keys:

```
python nvs_partition_gen.py encrypt sample_singlepage_blob.csv sample_encr.bin␣
↪0x3000 --keygen
```

Note: Encryption key of the following format `<outdir>/keys/keys-<timestamp>.bin` is created.

- Encrypt by allowing the utility to generate encryption keys and store it in provided custom filename:

```
python nvs_partition_gen.py encrypt sample_singlepage_blob.csv sample_encr.bin␣
↪0x3000 --keygen --keyfile sample_keys.bin
```

Note: Encryption key of the following format `<outdir>/keys/sample_keys.bin` is created.

Note: This newly created file having encryption keys in `keys/` directory is compatible with NVS key-partition structure. Refer to *NVS key partition* for more details.

- Encrypt by providing the encryption keys as input binary file:

```
python nvs_partition_gen.py encrypt sample_singlepage_blob.csv sample_encr.bin␣
↪0x3000 --inputkey sample_keys.bin
```

To decrypt encrypted NVS partition:

Usage:

```
python nvs_partition_gen.py decrypt [-h] [--outdir OUTDIR] input key␣
↪output

Positional Arguments:
+--------------+-------------------------------------------------------
↪------------+
| Parameter    |                          Description                  ␣
↪            |
+==============+=========================================================================+
| input        |        Path to encrypted NVS partition file to parse    ␣
↪            |
+--------------+-------------------------------------------------------
↪------------+
| key          |        Path to file having keys for decryption          ␣
↪            |
+--------------+-------------------------------------------------------
↪------------+
| output       |        Path to output decrypted binary file             ␣
↪            |
+--------------+-------------------------------------------------------
↪------------+


Optional Arguments:
+---------------------+-------------------------------------------------
↪-----------------+
| Parameter           |                          Description            ␣
↪                 |
+=====================+=========================================================================+
| -h, --help          |     show this help message and exit             ␣
↪                 |
+---------------------+-------------------------------------------------
↪-----------------+
| --outdir OUTDIR     |     Output directory to store files created     ␣
↪                 |
|                     |     (Default: current directory)                ␣
↪                 |
+---------------------+-------------------------------------------------
↪-----------------+
```

You can run the utility to decrypt encrypted NVS partition using the command below:

```
python nvs_partition_gen.py decrypt sample_encr.bin sample_keys.bin sample_decr.bin
```

You can also provide the format version number:

- Multipage Blob Support Disabled (Version 1)
- Multipage Blob Support Enabled (Version 2)

Multipage Blob Support Disabled (Version 1): You can run the utility in this format by setting the version parameter to 1, as shown below. A sample CSV file is provided with the utility:

```
python nvs_partition_gen.py generate sample_singlepage_blob.csv sample.bin 0x3000 -
↪-version 1
```

Multipage Blob Support Enabled (Version 2): You can run the utility in this format by setting the version parameter to 2, as shown below. A sample CSV file is provided with the utility:

```
python nvs_partition_gen.py generate sample_multipage_blob.csv sample.bin 0x4000 --
↪version 2
```

Note: *Minimum NVS Partition Size needed is 0x3000 bytes.*

Note: *When flashing the binary onto the device, make sure it is consistent with the application's sdkconfig.*

Caveats

- Utility does not check for duplicate keys and will write data pertaining to both keys. You need to make sure that the keys are distinct.
- Once a new page is created, no data will be written in the space left on the previous page. Fields in the CSV file need to be ordered in such a way as to optimize memory.
- 64-bit datatype is not yet supported.

2.6.5 SD/SDIO/MMC Driver

Overview

The SD/SDIO/MMC driver currently supports SD memory, SDIO cards, and eMMC chips. This is a protocol level driver built on top of SDMMC and SD SPI host drivers.

SDMMC and SD SPI host drivers (driver/include/driver/sdmmc_host.h and driver/include/driver/sdspi_host.h) provide API functions for:

- Sending commands to slave devices
- Sending and receiving data
- Handling error conditions within the bus

For functions used to initialize and configure:

- SDMMC host, see *SDMMC Host API*
- SD SPI host, see *SD SPI Host API*

The SDMMC protocol layer described in this document handles the specifics of the SD protocol, such as the card initialization and data transfer commands.

The protocol layer works with the host via the `sdmmc_host_t` structure. This structure contains pointers to various functions of the host.

Application Example

An example which combines the SDMMC driver with the FATFS library is provided in the storage/sd_card directory of ESP-IDF examples. This example initializes the card, then writes and reads data from it using POSIX and C library APIs. See README.md file in the example directory for more information.

Combo (memory + IO) cards The driver does not support SD combo cards. Combo cards are treated as IO cards.

Thread safety Most applications need to use the protocol layer only in one task. For this reason, the protocol layer does not implement any kind of locking on the *sdmmc_card_t* structure, or when accessing SDMMC or SD SPI host drivers. Such locking is usually implemented on a higher layer, e.g., in the filesystem driver.

Protocol layer API

The protocol layer is given the *sdmmc_host_t* structure. This structure describes the SD/MMC host driver, lists its capabilities, and provides pointers to functions of the driver. The protocol layer stores card-specific information in the *sdmmc_card_t* structure. When sending commands to the SD/MMC host driver, the protocol layer uses the *sdmmc_command_t* structure to describe the command, arguments, expected return values, and data to transfer if there is any.

Using API with SD memory cards

1. To initialize the host, call the host driver functions, e.g., *sdmmc_host_init()*, *sdmmc_host_init_slot()*.
2. To initialize the card, call *sdmmc_card_init()* and pass to it the parameters `host` - the host driver information, and `card` - a pointer to the structure *sdmmc_card_t* which will be filled with information about the card when the function completes.
3. To read and write sectors of the card, use *sdmmc_read_sectors()* and *sdmmc_write_sectors()* respectively and pass to it the parameter `card` - a pointer to the card information structure.
4. If the card is not used anymore, call the host driver function - e.g., *sdmmc_host_deinit()* - to disable the host peripheral and free the resources allocated by the driver.

Using API with eMMC chips From the protocol layer's perspective, eMMC memory chips behave exactly like SD memory cards. Even though eMMCs are chips and do not have a card form factor, the terminology for SD cards can still be applied to eMMC due to the similarity of the protocol (*sdmmc_card_t*, *sdmmc_card_init*). Note that eMMC chips cannot be used over SPI, which makes them incompatible with the SD SPI host driver.

To initialize eMMC memory and perform read/write operations, follow the steps listed for SD cards in the previous section.

Using API with SDIO cards Initialization and the probing process is the same as with SD memory cards. The only difference is in data transfer commands in SDIO mode.

During the card initialization and probing, performed with *sdmmc_card_init()*, the driver only configures the following registers of the IO card:

1. The IO portion of the card is reset by setting RES bit in the I/O Abort (0x06) register.
2. If 4-line mode is enabled in host and slot configuration, the driver attempts to set the Bus width field in the Bus Interface Control (0x07) register. If setting the filed is successful, which means that the slave supports 4-line mode, the host is also switched to 4-line mode.
3. If high-speed mode is enabled in the host configuration, the SHS bit is set in the High Speed (0x13) register.

In particular, the driver does not set any bits in (1) I/O Enable and Int Enable registers, (2) I/O block sizes, etc. Applications can set them by calling *sdmmc_io_write_byte()*.

For card configuration and data transfer, choose the pair of functions relevant to your case from the table below.

Action	Read Function	Write Function
Read and write a single byte using IO_RW_DIRECT (CMD52)	*sdmmc_io_read_byte()*	*sdmmc_io_write_byte()*
Read and write multiple bytes using IO_RW_EXTENDED (CMD53) in byte mode	*sdmmc_io_read_bytes()*	*sdmmc_io_write_bytes()*
Read and write blocks of data using IO_RW_EXTENDED (CMD53) in block mode	*sdmmc_io_read_blocks()*	*sdmmc_io_write_blocks()*

SDIO interrupts can be enabled by the application using the function `sdmmc_io_enable_int()`. When using SDIO in 1-line mode, the D1 line also needs to be connected to use SDIO interrupts.

If you want the application to wait until the SDIO interrupt occurs, use `sdmmc_io_wait_int()`.

There is a component ESSL (ESP Serial Slave Link) to use if you are communicating with an ESP32 SDIO slave. See *ESP Serial Slave Link* and example peripherals/sdio/host.

API Reference

Header File

- components/sdmmc/include/sdmmc_cmd.h

Functions

esp_err_t **sdmmc_card_init**(const *sdmmc_host_t* *host, *sdmmc_card_t* *out_card)

Probe and initialize SD/MMC card using given host

Note: Only SD cards (SDSC and SDHC/SDXC) are supported now. Support for MMC/eMMC cards will be added later.

Parameters

- **host** –pointer to structure defining host controller
- **out_card** –pointer to structure which will receive information about the card when the function completes

Returns

- ESP_OK on success
- One of the error codes from SDMMC host controller

void **sdmmc_card_print_info**(FILE *stream, const *sdmmc_card_t* *card)

Print information about the card to a stream.

Parameters

- **stream** –stream obtained using fopen or fdopen
- **card** –card information structure initialized using sdmmc_card_init

esp_err_t **sdmmc_get_status**(*sdmmc_card_t* *card)

Get status of SD/MMC card

Parameters **card** –pointer to card information structure previously initialized using sdmmc_card_init

Returns

- ESP_OK on success
- One of the error codes from SDMMC host controller

esp_err_t **sdmmc_write_sectors**(*sdmmc_card_t* *card, const void *src, size_t start_sector, size_t sector_count)

Write given number of sectors to SD/MMC card

Parameters

- **card** –pointer to card information structure previously initialized using sdmmc_card_init
- **src** –pointer to data buffer to read data from; data size must be equal to sector_count * card->csd.sector_size
- **start_sector** –sector where to start writing
- **sector_count** –number of sectors to write

Returns

- ESP_OK on success
- One of the error codes from SDMMC host controller

esp_err_t **sdmmc_read_sectors**(*sdmmc_card_t* *card, void *dst, size_t start_sector, size_t sector_count)

Read given number of sectors from the SD/MMC card

Parameters

- **card** –pointer to card information structure previously initialized using sdmmc_card_init
- **dst** –pointer to data buffer to write into; buffer size must be at least sector_count * card->csd.sector_size
- **start_sector** –sector where to start reading
- **sector_count** –number of sectors to read

Returns

- ESP_OK on success
- One of the error codes from SDMMC host controller

esp_err_t **sdmmc_io_read_byte**(*sdmmc_card_t* *card, uint32_t function, uint32_t reg, uint8_t *out_byte)

Read one byte from an SDIO card using IO_RW_DIRECT (CMD52)

Parameters

- **card** –pointer to card information structure previously initialized using sdmmc_card_init
- **function** –IO function number
- **reg** –byte address within IO function
- **out_byte** –**[out]** output, receives the value read from the card

Returns

- ESP_OK on success
- One of the error codes from SDMMC host controller

esp_err_t **sdmmc_io_write_byte**(*sdmmc_card_t* *card, uint32_t function, uint32_t reg, uint8_t in_byte, uint8_t *out_byte)

Write one byte to an SDIO card using IO_RW_DIRECT (CMD52)

Parameters

- **card** –pointer to card information structure previously initialized using sdmmc_card_init
- **function** –IO function number
- **reg** –byte address within IO function
- **in_byte** –value to be written
- **out_byte** –**[out]** if not NULL, receives new byte value read from the card (read-after-write).

Returns

- ESP_OK on success
- One of the error codes from SDMMC host controller

esp_err_t **sdmmc_io_read_bytes**(*sdmmc_card_t* *card, uint32_t function, uint32_t addr, void *dst, size_t size)

Read multiple bytes from an SDIO card using IO_RW_EXTENDED (CMD53)

This function performs read operation using CMD53 in byte mode. For block mode, see sdmmc_io_read_blocks.

Parameters

- **card** –pointer to card information structure previously initialized using sdmmc_card_init
- **function** –IO function number
- **addr** –byte address within IO function where reading starts
- **dst** –buffer which receives the data read from card
- **size** –number of bytes to read

Returns

- ESP_OK on success
- ESP_ERR_INVALID_SIZE if size exceeds 512 bytes
- One of the error codes from SDMMC host controller

esp_err_t **sdmmc_io_write_bytes**(*sdmmc_card_t* *card, uint32_t function, uint32_t addr, const void *src, size_t size)

Write multiple bytes to an SDIO card using IO_RW_EXTENDED (CMD53)

This function performs write operation using CMD53 in byte mode. For block mode, see sdmmc_io_write_blocks.

Parameters

- **card** –pointer to card information structure previously initialized using sdmmc_card_init
- **function** –IO function number
- **addr** –byte address within IO function where writing starts
- **src** –data to be written
- **size** –number of bytes to write

Returns

- ESP_OK on success
- ESP_ERR_INVALID_SIZE if size exceeds 512 bytes
- One of the error codes from SDMMC host controller

esp_err_t **sdmmc_io_read_blocks**(*sdmmc_card_t* *card, uint32_t function, uint32_t addr, void *dst, size_t size)

Read blocks of data from an SDIO card using IO_RW_EXTENDED (CMD53)

This function performs read operation using CMD53 in block mode. For byte mode, see sdmmc_io_read_bytes.

Parameters

- **card** –pointer to card information structure previously initialized using sdmmc_card_init
- **function** –IO function number
- **addr** –byte address within IO function where writing starts
- **dst** –buffer which receives the data read from card
- **size** –number of bytes to read, must be divisible by the card block size.

Returns

- ESP_OK on success
- ESP_ERR_INVALID_SIZE if size is not divisible by 512 bytes
- One of the error codes from SDMMC host controller

esp_err_t **sdmmc_io_write_blocks**(*sdmmc_card_t* *card, uint32_t function, uint32_t addr, const void *src, size_t size)

Write blocks of data to an SDIO card using IO_RW_EXTENDED (CMD53)

This function performs write operation using CMD53 in block mode. For byte mode, see sdmmc_io_write_bytes.

Parameters

- **card** –pointer to card information structure previously initialized using sdmmc_card_init
- **function** –IO function number
- **addr** –byte address within IO function where writing starts
- **src** –data to be written
- **size** –number of bytes to read, must be divisible by the card block size.

Returns

- ESP_OK on success
- ESP_ERR_INVALID_SIZE if size is not divisible by 512 bytes
- One of the error codes from SDMMC host controller

esp_err_t **sdmmc_io_enable_int**(*sdmmc_card_t* *card)

Enable SDIO interrupt in the SDMMC host

Parameters **card** –pointer to card information structure previously initialized using sdmmc_card_init

Returns

- ESP_OK on success
- ESP_ERR_NOT_SUPPORTED if the host controller does not support IO interrupts

esp_err_t **sdmmc_io_wait_int**(*sdmmc_card_t* *card, TickType_t timeout_ticks)

Block until an SDIO interrupt is received

Slave uses D1 line to signal interrupt condition to the host. This function can be used to wait for the interrupt.

Parameters

- **card** –pointer to card information structure previously initialized using sdmmc_card_init
- **timeout_ticks** –time to wait for the interrupt, in RTOS ticks

Returns

- ESP_OK if the interrupt is received
- ESP_ERR_NOT_SUPPORTED if the host controller does not support IO interrupts
- ESP_ERR_TIMEOUT if the interrupt does not happen in timeout_ticks

esp_err_t **sdmmc_io_get_cis_data**(*sdmmc_card_t* *card, uint8_t *out_buffer, size_t buffer_size, size_t *inout_cis_size)

Get the data of CIS region of an SDIO card.

You may provide a buffer not sufficient to store all the CIS data. In this case, this function stores as much data into your buffer as possible. Also, this function will try to get and return the size required for you.

Parameters

- **card** –pointer to card information structure previously initialized using sdmmc_card_init
- **out_buffer** –Output buffer of the CIS data
- **buffer_size** –Size of the buffer.
- **inout_cis_size** –Mandatory, pointer to a size, input and output.
  - input: Limitation of maximum searching range, should be 0 or larger than buffer_size. The function searches for CIS_CODE_END until this range. Set to 0 to search infinitely.
  - output: The size required to store all the CIS data, if CIS_CODE_END is found.

Returns

- ESP_OK: on success
- ESP_ERR_INVALID_RESPONSE: if the card does not (correctly) support CIS.
- ESP_ERR_INVALID_SIZE: CIS_CODE_END found, but buffer_size is less than required size, which is stored in the inout_cis_size then.
- ESP_ERR_NOT_FOUND: if the CIS_CODE_END not found. Increase input value of inout_cis_size or set it to 0, if you still want to search for the end; output value of inout_cis_size is invalid in this case.
- and other error code return from sdmmc_io_read_bytes

esp_err_t **sdmmc_io_print_cis_info**(uint8_t *buffer, size_t buffer_size, FILE *fp)

Parse and print the CIS information of an SDIO card.

Note: Not all the CIS codes and all kinds of tuples are supported. If you see some unresolved code, you can add the parsing of these code in sdmmc_io.c and contribute to the IDF through the Github repository.

```
using sdmmc_card_init
```

Parameters

- **buffer** –Buffer to parse
- **buffer_size** –Size of the buffer.
- **fp** –File pointer to print to, set to NULL to print to stdout.

Returns

- ESP_OK: on success
- ESP_ERR_NOT_SUPPORTED: if the value from the card is not supported to be parsed.
- ESP_ERR_INVALID_SIZE: if the CIS size fields are not correct.

Header File

- components/driver/include/driver/sdmmc_types.h

Structures

struct **sdmmc_csd_t**

Decoded values from SD card Card Specific Data register

Public Members

int **csd_ver**

CSD structure format

int **mmc_ver**

MMC version (for CID format)

int **capacity**

total number of sectors

int **sector_size**

sector size in bytes

int **read_block_len**

block length for reads

int **card_command_class**

Card Command Class for SD

int **tr_speed**

Max transfer speed

struct **sdmmc_cid_t**

Decoded values from SD card Card IDentification register

Public Members

int **mfg_id**

manufacturer identification number

int **oem_id**

OEM/product identification number

char **name**[8]

product name (MMC v1 has the longest)

int **revision**

product revision

int **serial**

product serial number

int **date**

manufacturing date

struct **sdmmc_scr_t**

Decoded values from SD Configuration Register

Public Members

int **sd_spec**

SD Physical layer specification version, reported by card

int **bus_width**

bus widths supported by card: BIT(0) —1-bit bus, BIT(2) —4-bit bus

struct **sdmmc_ext_csd_t**

Decoded values of Extended Card Specific Data

Public Members

uint8_t **power_class**

Power class used by the card

struct **sdmmc_switch_func_rsp_t**

SD SWITCH_FUNC response buffer

Public Members

uint32_t **data**[512 / 8 / sizeof(uint32_t)]

response data

struct **sdmmc_command_t**

SD/MMC command information

Public Members

uint32_t **opcode**

SD or MMC command index

uint32_t **arg**

SD/MMC command argument

sdmmc_response_t **response**

response buffer

void ***data**

buffer to send or read into

size_t **datalen**

length of data buffer

size_t **blklen**

block length

int **flags**

see below

esp_err_t **error**

error returned from transfer

int **timeout_ms**

response timeout, in milliseconds

struct **sdmmc_host_t**

SD/MMC Host description

This structure defines properties of SD/MMC host and functions of SD/MMC host which can be used by upper layers.

Public Members

uint32_t **flags**

flags defining host properties

int **slot**

slot number, to be passed to host functions

int **max_freq_khz**

max frequency supported by the host

float **io_voltage**

I/O voltage used by the controller (voltage switching is not supported)

esp_err_t (***init**)(void)

Host function to initialize the driver

esp_err_t (***set_bus_width**)(int slot, size_t width)

host function to set bus width

size_t (***get_bus_width**)(int slot)

host function to get bus width

esp_err_t (***set_bus_ddr_mode**)(int slot, bool ddr_enable)

host function to set DDR mode

esp_err_t (***set_card_clk**)(int slot, uint32_t freq_khz)

host function to set card clock frequency

esp_err_t (***do_transaction**)(int slot, *sdmmc_command_t* *cmdinfo)

host function to do a transaction

esp_err_t (***deinit**)(void)

host function to deinitialize the driver

esp_err_t (***deinit_p**)(int slot)

host function to deinitialize the driver, called with the `slot`

esp_err_t (***io_int_enable**)(int slot)

Host function to enable SDIO interrupt line

esp_err_t (***io_int_wait**)(int slot, TickType_t timeout_ticks)

Host function to wait for SDIO interrupt line to be active

int **command_timeout_ms**

timeout, in milliseconds, of a single command. Set to 0 to use the default value.

struct **sdmmc_card_t**

SD/MMC card information structure

Public Members

sdmmc_host_t **host**

Host with which the card is associated

uint32_t **ocr**

OCR (Operation Conditions Register) value

sdmmc_cid_t **cid**

decoded CID (Card IDentification) register value

sdmmc_response_t **raw_cid**

raw CID of MMC card to be decoded after the CSD is fetched in the data transfer mode

sdmmc_csd_t **csd**

decoded CSD (Card-Specific Data) register value

sdmmc_scr_t **scr**

decoded SCR (SD card Configuration Register) value

sdmmc_ext_csd_t **ext_csd**

decoded EXT_CSD (Extended Card Specific Data) register value

uint16_t **rca**

RCA (Relative Card Address)

uint16_t **max_freq_khz**

Maximum frequency, in kHz, supported by the card

uint32_t **is_mem**

Bit indicates if the card is a memory card

uint32_t **is_sdio**

Bit indicates if the card is an IO card

uint32_t **is_mmc**

Bit indicates if the card is MMC

uint32_t **num_io_functions**

If is_sdio is 1, contains the number of IO functions on the card

uint32_t **log_bus_width**

log2(bus width supported by card)

uint32_t **is_ddr**

Card supports DDR mode

uint32_t **reserved**

Reserved for future expansion

Macros

SDMMC_HOST_FLAG_1BIT

host supports 1-line SD and MMC protocol

SDMMC_HOST_FLAG_4BIT

host supports 4-line SD and MMC protocol

SDMMC_HOST_FLAG_8BIT

host supports 8-line MMC protocol

SDMMC_HOST_FLAG_SPI

host supports SPI protocol

SDMMC_HOST_FLAG_DDR

host supports DDR mode for SD/MMC

SDMMC_HOST_FLAG_DEINIT_ARG

host `deinit` function called with the slot argument

SDMMC_FREQ_DEFAULT

SD/MMC Default speed (limited by clock divider)

SDMMC_FREQ_HIGHSPEED

SD High speed (limited by clock divider)

SDMMC_FREQ_PROBING

SD/MMC probing speed

SDMMC_FREQ_52M

MMC 52MHz speed

SDMMC_FREQ_26M

MMC 26MHz speed

Type Definitions

typedef uint32_t **sdmmc_response_t**[4]

SD/MMC command response buffer

2.6.6 SPI Flash API

Overview

The spi_flash component contains API functions related to reading, writing, erasing, memory mapping for data in the external flash. The spi_flash component also has higher-level API functions which work with partitions defined in the *partition table*.

Different from the API before IDF v4.0, the functionality of *esp_flash_** APIs is not limited to the "main" SPI flash chip (the same SPI flash chip from which program runs). With different chip pointers, you can access to external flash chips connected to not only SPI0/1 but also other SPI buses like SPI2.

Note: Instead of through the cache connected to the SPI0 peripheral, most *esp_flash_** APIs go through other SPI peripherals like SPI1, SPI2, etc.. This makes them able to access to not only the main flash, but also external flash.

However due to limitations of the cache, operations through the cache are limited to the main flash. The address range limitation for these operations are also on the cache side. The cache is not able to access external flash chips or address range above its capabilities. These cache operations include: mmap, encrypted read/write, executing code or access to variables in the flash.

Note: Flash APIs after IDF v4.0 are no longer *atomic*. A writing operation during another on-going read operation, on the overlapped flash address, may cause the return data from the read operation to be partly same as before, and partly updated as new written.

Kconfig option *CONFIG_SPI_FLASH_USE_LEGACY_IMPL* can be used to switch `spi_flash_*` functions back to the implementation before ESP-IDF v4.0. However, the code size may get bigger if you use the new API and the old API at the same time.

Encrypted reads and writes use the old implementation, even if *CONFIG_SPI_FLASH_USE_LEGACY_IMPL* is not enabled. As such, encrypted flash operations are only supported with the main flash chip (and not with other flash chips, that is on SPI1 with different CS, or on other SPI buses). Reading through cache is only supported on the main flash, which is determined by the HW.

Support for features of flash chips

Flash features of different vendors are operated in different ways and need special support. The fast/slow read and Dual mode (DOUT/DIO) of almost all 24-bits address flash chips are supported, because they don't need any vendor-specific commands.

Quad mode (QIO/QOUT) is supported on following chip types:

1. ISSI
2. GD
3. MXIC
4. FM
5. Winbond
6. XMC
7. BOYA

The 32-bit address range of following chip type is supported:

1. W25Q256
2. GD25Q256

Users can also customize their own flash chip driver, see *Overriding Default Chip Drivers* for more details.

Warning: Customizing SPI Flash Chip Drivers is considered an "expert" feature. Users should only do so at their own risk. (See the notes below)

Overriding Default Chip Drivers During the SPI Flash driver's initialization (i.e., `esp_flash_init()`), there is a chip detection step during which the driver will iterate through a Default Chip Driver List and determine which chip driver can properly support the currently connected flash chip. The Default Chip Drivers are provided by the IDF, thus are updated in together with each IDF version. However IDF also allows users to customize their own chip drivers.

Users should note the following when customizing chip drivers:

1. You may need to rely on some non-public IDF functions, which have slight possibility to change between IDF versions. On the one hand, these changes may be useful bug fixes for your driver, on the other hand, they may also be breaking changes (i.e., breaks your code).
2. Some IDF bug fixes to other chip drivers will not be automatically applied to your own custom chip drivers.
3. If the protection of flash is not handled properly, there may be some random reliability issues.
4. If you update to a newer IDF version that has support for more chips, you will have to manually add those new chip drivers into your custom chip driver list. Otherwise the driver will only search for the drivers in custom list you provided.

Steps For Creating Custom Chip Drivers and Overriding the IDF Default Driver List

1. Enable the *CONFIG_SPI_FLASH_OVERRIDE_CHIP_DRIVER_LIST* config option. This will prevent compilation and linking of the Default Chip Driver List (*default_registered_chips*) provided by IDF. Instead, the linker will search for the structure of the same name (*default_registered_chips*) that must be provided by the user.
2. Add a new component in your project, e.g. *custom_chip_driver*.
3. Copy the necessary chip driver files from the *spi_flash* component in IDF. This may include:
   - *spi_flash_chip_drivers.c* (to provide the *default_registered_chips* structure)
   - Any of the *spi_flash_chip_*.c* files that matches your own flash model best
   - *CMakeLists.txt* and *linker.lf* files

   Modify the files above properly.

Note:

- When writing your own flash chip driver, you can set your flash chip capabilities through *spi_flash_chip_***(vendor)_get_caps* and points the function pointer *get_chip_caps* for protection to the *spi_flash_chip_***_get_caps* function. The steps are as follows.
  1. Please check whether your flash chip have the capabilities listed in *spi_flash_caps_t* by checking the flash datasheet.
  2. Write a function named *spi_flash_chip_***(vendor)_get_caps*. Take the example below as a reference. (if the flash support *suspend* and *read unique id*).
  3. Points the the pointer *get_chip_caps* (in *spi_flash_chip_t*) to the function mentioned above.

```
spi_flash_caps_t spi_flash_chip_***(vendor)_get_caps(esp_flash_t *chip)
{
    spi_flash_caps_t caps_flags = 0;
    // 32-bit-address flash is not supported
    flash-suspend is supported
    caps_flags |= SPI_FLAHS_CHIP_CAP_SUSPEND;
    // flash read unique id.
    caps_flags |= SPI_FLASH_CHIP_CAP_UNIQUE_ID;
    return caps_flags;
}
```

```
const spi_flash_chip_t esp_flash_chip_eon = {
    // Other function pointers
    .get_chip_caps = spi_flash_chip_eon_get_caps,
};
```

- You also can see how to implement this in the example storage/custom_flash_driver.

4. Add linking dependency from *spi_flash* component to the new *custom_chip_driver* component, by adding the following lines after the *idf_component_register*, in the *CMakeLists.txt* file of the *custom_chip_driver* component:
   idf_component_get_property(spi_flash_lib spi_flash COMPONENT_LIB)
   set_property(TARGET ${spi_flash_lib} APPEND PROPERTY INTERFACE_LINK_LIBRARIES $<LINK_ONLY:${COMPONENT_LIB}>)
5. The *linker.lf* is used to put every chip driver that you are going to use whilst cache is disabled into internal RAM. See *Linker Script Generation* for more details. Make sure this file covers all the source files that you add.
6. Build your project, and you will see the new flash driver is used.

Example See also storage/custom_flash_driver.

Initializing a flash device

To use `esp_flash_*` APIs, you need to have a chip initialized on a certain SPI bus.

1. Call `spi_bus_initialize()` to properly initialize an SPI bus. This functions initialize the resources (I/O, DMA, interrupts) shared among devices attached to this bus.
2. Call `spi_bus_add_flash_device()` to attach the flash device onto the bus. This allocates memory, and fill the members for the `esp_flash_t` structure. The CS I/O is also initialized here.
3. Call `esp_flash_init()` to actually communicate with the chip. This will also detect the chip type, and influence the following operations.

Note: Multiple flash chips can be attached to the same bus now. However, using `esp_flash_*` devices and `spi_device_*` devices on the same SPI bus is not supported yet.

SPI flash access API

This is the set of API functions for working with data in flash:

- `esp_flash_read()` reads data from flash to RAM
- `esp_flash_write()` writes data from RAM to flash
- `esp_flash_erase_region()` erases specific region of flash
- `esp_flash_erase_chip()` erases the whole flash
- `esp_flash_get_chip_size()` returns flash chip size, in bytes, as configured in menuconfig

Generally, try to avoid using the raw SPI flash functions to the "main" SPI flash chip in favour of *partition-specific functions*.

SPI Flash Size

The SPI flash size is configured by writing a field in the software bootloader image header, flashed at offset 0x1000.

By default, the SPI flash size is detected by esptool.py when this bootloader is written to flash, and the header is updated with the correct size. Alternatively, it is possible to generate a fixed flash size by setting `CONFIG_ESPTOOLPY_FLASHSIZE` in project configuration.

If it is necessary to override the configured flash size at runtime, it is possible to set the `chip_size` member of the `g_rom_flashchip` structure. This size is used by `esp_flash_*` functions (in both software & ROM) to check the bounds.

Concurrency Constraints for flash on SPI1

Concurrency Constraints for flash on SPI1 The SPI0/1 bus is shared between the instruction & data cache (for firmware execution) and the SPI1 peripheral (controlled by the drivers including this SPI Flash driver). Hence, operations to SPI1 will cause significant influence to the whole system. This kind of operations include calling SPI Flash API or other drivers on SPI1 bus, any operations like read/write/erase or other user defined SPI operations, regardless to the main flash or other SPI slave devices.

On ESP32, these caches must be disabled while reading/writing/erasing.

When the caches are disabled This means that all CPUs must be running code from IRAM and must only be reading data from DRAM while flash write operations occur. If you use the API functions documented here, then the caches will be disabled automatically and transparently. However, note that it will have some performance impact on other tasks in the system.

There are no such constraints and impacts for flash chips on other SPI buses than SPI0/1.

For differences between IRAM, DRAM, and flash cache, please refer to the *application memory layout* documentation.

To avoid reading flash cache accidentally, when one CPU initiates a flash write or erase operation, the other CPU is put into a blocked state, and all non-IRAM-safe interrupts are disabled on all CPUs until the flash operation completes.

See also *OS functions*, *SPI Bus Lock*.

IRAM-Safe Interrupt Handlers If you have an interrupt handler that you want to execute while a flash operation is in progress (for example, for low latency operations), set the `ESP_INTR_FLAG_IRAM` flag when the *interrupt handler is registered*.

You must ensure that all data and functions accessed by these interrupt handlers, including the ones that handlers call, are located in IRAM or DRAM. See *How to place code in IRAM*.

If a function or symbol is not correctly put into IRAM/DRAM, and the interrupt handler reads from the flash cache during a flash operation, it will cause a crash due to Illegal Instruction exception (for code which should be in IRAM) or garbage data to be read (for constant data which should be in DRAM).

Note: When working with string in ISRs, it is not advised to use `printf` and other output functions. For debugging purposes, use `ESP_DRAM_LOGE()` and similar macros when logging from ISRs. Make sure that both `TAG` and format string are placed into `DRAM` in that case.

Attention: The SPI0/1 bus is shared between the instruction & data cache (for firmware execution) and the SPI1 peripheral (controlled by the drivers including this SPI flash driver). Hence, calling SPI Flash API on SPI1 bus (including the main flash) will cause significant influence to the whole system. See *Concurrency Constraints for flash on SPI1* for more details.

Partition table API

ESP-IDF projects use a partition table to maintain information about various regions of SPI flash memory (bootloader, various application binaries, data, filesystems). More information on partition tables can be found *here*.

This component provides API functions to enumerate partitions found in the partition table and perform operations on them. These functions are declared in `esp_partition.h`:

- *`esp_partition_find()`* checks a partition table for entries with specific type, returns an opaque iterator.
- *`esp_partition_get()`* returns a structure describing the partition for a given iterator.
- *`esp_partition_next()`* shifts the iterator to the next found partition.
- *`esp_partition_iterator_release()`* releases iterator returned by `esp_partition_find`.
- *`esp_partition_find_first()`* - a convenience function which returns the structure describing the first partition found by `esp_partition_find`.
- *`esp_partition_read()`*, *`esp_partition_write()`*, *`esp_partition_erase_range()`* are equivalent to `spi_flash_read()`, `spi_flash_write()`, `spi_flash_erase_range()`, but operate within partition boundaries.

Note: Application code should mostly use these `esp_partition_*` API functions instead of lower level `esp_flash_*` API functions. Partition table API functions do bounds checking and calculate correct offsets in flash, based on data stored in a partition table.

SPI Flash Encryption

It is possible to encrypt the contents of SPI flash and have it transparently decrypted by hardware.

Refer to the *Flash Encryption documentation* for more details.

Memory mapping API

ESP32 features memory hardware which allows regions of flash memory to be mapped into instruction and data address spaces. This mapping works only for read operations. It is not possible to modify contents of flash memory by writing to a mapped memory region.

Mapping happens in 64 KB pages. Memory mapping hardware can map flash into the data address space and the instruction address space. See the technical reference manual for more details and limitations about memory mapping hardware.

Note that some pages are used to map the application itself into memory, so the actual number of available pages may be less than the capability of the hardware.

Reading data from flash using a memory mapped region is the only way to decrypt contents of flash when *flash encryption* is enabled. Decryption is performed at the hardware level.

Memory mapping API are declared in `esp_spi_flash.h` and `esp_partition.h`:

- `spi_flash_mmap()` maps a region of physical flash addresses into instruction space or data space of the CPU.
- `spi_flash_munmap()` unmaps previously mapped region.
- *`esp_partition_mmap()`* maps part of a partition into the instruction space or data space of the CPU.

Differences between `spi_flash_mmap()` and *`esp_partition_mmap()`* are as follows:

- `spi_flash_mmap()` must be given a 64 KB aligned physical address.
- *`esp_partition_mmap()`* may be given any arbitrary offset within the partition, it will adjust the returned pointer to mapped memory as necessary.

Note that since memory mapping happens in pages, it may be possible to read data outside of the partition provided to `esp_partition_mmap`, regardless of the partition boundary.

Note: mmap is supported by cache, so it can only be used on main flash.

SPI Flash Implementation

The `esp_flash_t` structure holds chip data as well as three important parts of this API:

1. The host driver, which provides the hardware support to access the chip;
2. The chip driver, which provides compatibility service to different chips;
3. The OS functions, provides support of some OS functions (e.g. lock, delay) in different stages (1st/2st boot, or the app).

Host driver The host driver relies on an interface (`spi_flash_host_driver_t`) defined in the `spi_flash_types.h` (in the `hal/include/hal` folder). This interface provides some common functions to communicate with the chip.

In other files of the SPI HAL, some of these functions are implemented with existing ESP32 memory-spi functionalities. However due to the speed limitations of ESP32, the HAL layer can't provide high-speed implementations to some reading commands (So we didn't do it at all). The files (`memspi_host_driver.h` and `.c`) implement the high-speed version of these commands with the `common_command` function provided in the HAL, and wrap these functions as `spi_flash_host_driver_t` for upper layer to use.

You can also implement your own host driver, even with the GPIO. As long as all the functions in the `spi_flash_host_driver_t` are implemented, the esp_flash API can access to the flash regardless of the low-level hardware.

Chip driver The chip driver, defined in `spi_flash_chip_driver.h`, wraps basic functions provided by the host driver for the API layer to use.

Some operations need some commands to be sent first, or read some status after. Some chips need different command or value, or need special communication ways.

There is a type of chip called `generic chip` which stands for common chips. Other special chip drivers can be developed on the base of the generic chip.

The chip driver relies on the host driver.

OS functions Currently the OS function layer provides entries of a lock and delay.

The lock (see *SPI Bus Lock*) is used to resolve the conflicts among the access of devices on the same SPI bus, and the SPI Flash chip access. E.g.

1. On SPI1 bus, the cache (used to fetch the data (code) in the Flash and PSRAM) should be disabled when the flash chip on the SPI0/1 is being accessed.
2. On the other buses, the flash driver needs to disable the ISR registered by SPI Master driver, to avoid conflicts.
3. Some devices of SPI Master driver may requires to use the bus monopolized during a period. (especially when the device doesn't have CS wire, or the wire is controlled by the software like SDSPI driver).

The delay is used by some long operations which requires the master to wait or polling periodically.

The top API wraps these the chip driver and OS functions into an entire component, and also provides some argument checking.

See also

- *Partition Table documentation*
- *Over The Air Update (OTA) API* provides high-level API for updating app firmware stored in flash.
- *Non-Volatile Storage (NVS) API* provides a structured API for storing small pieces of data in SPI flash.

Implementation details

In order to perform some flash operations, it is necessary to make sure that both CPUs are not running any code from flash for the duration of the flash operation: - In a single-core setup, the SDK does it by disabling interrupts/scheduler before performing the flash operation. - In a dual-core setup, this is slightly more complicated as the SDK needs to make sure that the other CPU is not running any code from flash.

When SPI flash API is called on CPU A (can be PRO or APP), start the `spi_flash_op_block_func` function on CPU B using the `esp_ipc_call` API. This API wakes up a high priority task on CPU B and tells it to execute a given function, in this case, `spi_flash_op_block_func`. This function disables cache on CPU B and signals that the cache is disabled by setting the `s_flash_op_can_start` flag. Then the task on CPU A disables cache as well and proceeds to execute flash operation.

While a flash operation is running, interrupts can still run on CPUs A and B. It is assumed that all interrupt code is placed into RAM. Once the interrupt allocation API is added, a flag should be added to request the interrupt to be disabled for the duration of a flash operations.

Once the flash operation is complete, the function on CPU A sets another flag, `s_flash_op_complete`, to let the task on CPU B know that it can re-enable cache and release the CPU. Then the function on CPU A re-enables the cache on CPU A as well and returns control to the calling code.

Additionally, all API functions are protected with a mutex (`s_flash_op_mutex`).

In a single core environment (*CONFIG_FREERTOS_UNICORE* enabled), you need to disable both caches, so that no inter-CPU communication can take place.

API Reference - SPI Flash

Header File

- components/spi_flash/include/esp_flash_spi_init.h

Functions

esp_err_t **spi_bus_add_flash_device**(*esp_flash_t* **out_chip, const *esp_flash_spi_device_config_t* *config)

Add a SPI Flash device onto the SPI bus.

The bus should be already initialized by `spi_bus_initialization`.

Parameters
- **out_chip** –Pointer to hold the initialized chip.
- **config** –Configuration of the chips to initialize.

Returns
- ESP_ERR_INVALID_ARG: out_chip is NULL, or some field in the config is invalid.
- ESP_ERR_NO_MEM: failed to allocate memory for the chip structures.
- ESP_OK: success.

esp_err_t **spi_bus_remove_flash_device**(*esp_flash_t* *chip)

Remove a SPI Flash device from the SPI bus.

Parameters **chip** –The flash device to remove.

Returns
- ESP_ERR_INVALID_ARG: The chip is invalid.
- ESP_OK: success.

Structures

struct **esp_flash_spi_device_config_t**

Configurations for the SPI Flash to init.

Public Members

spi_host_device_t **host_id**

Bus to use.

int **cs_io_num**

GPIO pin to output the CS signal.

esp_flash_io_mode_t **io_mode**

IO mode to read from the Flash.

esp_flash_speed_t **speed**

Speed of the Flash clock.

int **input_delay_ns**

Input delay of the data pins, in ns. Set to 0 if unknown.

int **cs_id**

CS line ID, ignored when not `host_id` is not SPI1_HOST, or `CONFIG_SPI_FLASH_SHARE_SPI1_BUS` is enabled. In this case, the CS line used is automatically assigned by the SPI bus lock.

Header File

- components/spi_flash/include/esp_flash.h

Functions

esp_err_t **esp_flash_init**(*esp_flash_t* *chip)

Initialise SPI flash chip interface.

This function must be called before any other API functions are called for this chip.

Note: Only the `host` and `read_mode` fields of the chip structure must be initialised before this function is called. Other fields may be auto-detected if left set to zero or NULL.

Note: If the chip->drv pointer is NULL, chip chip_drv will be auto-detected based on its manufacturer & product IDs. See `esp_flash_registered_flash_drivers` pointer for details of this process.

Parameters **chip** –Pointer to SPI flash chip to use. If NULL, esp_flash_default_chip is substituted.

Returns ESP_OK on success, or a flash error code if initialisation fails.

bool **esp_flash_chip_driver_initialized**(const *esp_flash_t* *chip)

Check if appropriate chip driver is set.

Parameters **chip** –Pointer to SPI flash chip to use. If NULL, esp_flash_default_chip is substituted.

Returns true if set, otherwise false.

esp_err_t **esp_flash_read_id**(*esp_flash_t* *chip, uint32_t *out_id)

Read flash ID via the common "RDID" SPI flash command.

ID is a 24-bit value. Lower 16 bits of 'id' are the chip ID, upper 8 bits are the manufacturer ID.

Parameters
- **chip** –Pointer to identify flash chip. Must have been successfully initialised via esp_flash_init()
- **out_id** –**[out]** Pointer to receive ID value.

Returns ESP_OK on success, or a flash error code if operation failed.

esp_err_t **esp_flash_get_size**(*esp_flash_t* *chip, uint32_t *out_size)

Detect flash size based on flash ID.

Note: Most flash chips use a common format for flash ID, where the lower 4 bits specify the size as a power of 2. If the manufacturer doesn't follow this convention, the size may be incorrectly detected.

Parameters
- **chip** –Pointer to identify flash chip. Must have been successfully initialised via esp_flash_init()
- **out_size** –**[out]** Detected size in bytes.

Returns ESP_OK on success, or a flash error code if operation failed.

esp_err_t **esp_flash_read_unique_chip_id**(*esp_flash_t* *chip, uint64_t *out_id)

Read flash unique ID via the common "RDUID" SPI flash command.

ID is a 64-bit value.

Parameters
- **chip** –Pointer to identify flash chip. Must have been successfully initialised via esp_flash_init().
- **out_id** –**[out]** Pointer to receive unique ID value.

Returns
- ESP_OK on success, or a flash error code if operation failed.
- ESP_ERR_NOT_SUPPORTED if the chip doesn't support read id.

esp_err_t **esp_flash_erase_chip**(*esp_flash_t* *chip)

Erase flash chip contents.

Parameters **chip** –Pointer to identify flash chip. Must have been successfully initialised via esp_flash_init()

Returns
- ESP_OK on success,
- ESP_ERR_NOT_SUPPORTED if the chip is not able to perform the operation. This is indicated by WREN = 1 after the command is sent.
- Other flash error code if operation failed.

esp_err_t **esp_flash_erase_region**(*esp_flash_t* *chip, uint32_t start, uint32_t len)

Erase a region of the flash chip.

Sector size is specifyed in chip->drv->sector_size field (typically 4096 bytes.) ESP_ERR_INVALID_ARG will be returned if the start & length are not a multiple of this size.

Erase is performed using block (multi-sector) erases where possible (block size is specified in chip->drv->block_erase_size field, typically 65536 bytes). Remaining sectors are erased using individual sector erase commands.

Parameters

- **chip** –Pointer to identify flash chip. Must have been successfully initialised via esp_flash_init()
- **start** –Address to start erasing flash. Must be sector aligned.
- **len** –Length of region to erase. Must also be sector aligned.

Returns

- ESP_OK on success,
- ESP_ERR_NOT_SUPPORTED if the chip is not able to perform the operation. This is indicated by WREN = 1 after the command is sent.
- Other flash error code if operation failed.

esp_err_t **esp_flash_get_chip_write_protect**(*esp_flash_t* *chip, bool *write_protected)

Read if the entire chip is write protected.

Note: A correct result for this flag depends on the SPI flash chip model and chip_drv in use (via the 'chip->drv' field).

Parameters

- **chip** –Pointer to identify flash chip. Must have been successfully initialised via esp_flash_init()
- **write_protected** –**[out]** Pointer to boolean, set to the value of the write protect flag.

Returns ESP_OK on success, or a flash error code if operation failed.

esp_err_t **esp_flash_set_chip_write_protect**(*esp_flash_t* *chip, bool write_protect)

Set write protection for the SPI flash chip.

Some SPI flash chips may require a power cycle before write protect status can be cleared. Otherwise, write protection can be removed via a follow-up call to this function.

Note: Correct behaviour of this function depends on the SPI flash chip model and chip_drv in use (via the 'chip->drv' field).

Parameters

- **chip** –Pointer to identify flash chip. Must have been successfully initialised via esp_flash_init()
- **write_protect** –Boolean value for the write protect flag

Returns ESP_OK on success, or a flash error code if operation failed.

esp_err_t **esp_flash_get_protectable_regions**(const *esp_flash_t* *chip, const *esp_flash_region_t* **out_regions, uint32_t *out_num_regions)

Read the list of individually protectable regions of this SPI flash chip.

Note: Correct behaviour of this function depends on the SPI flash chip model and chip_drv in use (via the 'chip->drv' field).

Parameters

- **chip** –Pointer to identify flash chip. Must have been successfully initialised via esp_flash_init()
- **out_regions** –**[out]** Pointer to receive a pointer to the array of protectable regions of the chip.
- **out_num_regions** –**[out]** Pointer to an integer receiving the count of protectable regions in the array returned in 'regions'.

Returns ESP_OK on success, or a flash error code if operation failed.

esp_err_t **esp_flash_get_protected_region**(*esp_flash_t* *chip, const *esp_flash_region_t* *region, bool *out_protected)

Detect if a region of the SPI flash chip is protected.

Note: It is possible for this result to be false and write operations to still fail, if protection is enabled for the entire chip.

Note: Correct behaviour of this function depends on the SPI flash chip model and chip_drv in use (via the 'chip->drv' field).

Parameters

- **chip** –Pointer to identify flash chip. Must have been successfully initialised via esp_flash_init()
- **region** –Pointer to a struct describing a protected region. This must match one of the regions returned from esp_flash_get_protectable_regions(…).
- **out_protected** –**[out]** Pointer to a flag which is set based on the protected status for this region.

Returns ESP_OK on success, or a flash error code if operation failed.

esp_err_t **esp_flash_set_protected_region**(*esp_flash_t* *chip, const *esp_flash_region_t* *region, bool protect)

Update the protected status for a region of the SPI flash chip.

Note: It is possible for the region protection flag to be cleared and write operations to still fail, if protection is enabled for the entire chip.

Note: Correct behaviour of this function depends on the SPI flash chip model and chip_drv in use (via the 'chip->drv' field).

Parameters

- **chip** –Pointer to identify flash chip. Must have been successfully initialised via esp_flash_init()
- **region** –Pointer to a struct describing a protected region. This must match one of the regions returned from esp_flash_get_protectable_regions(…).
- **protect** –Write protection flag to set.

Returns ESP_OK on success, or a flash error code if operation failed.

esp_err_t **esp_flash_read**(*esp_flash_t* *chip, void *buffer, uint32_t address, uint32_t length)

Read data from the SPI flash chip.

There are no alignment constraints on buffer, address or length.

Note: If on-chip flash encryption is used, this function returns raw (ie encrypted) data. Use the flash cache to transparently decrypt data.

Parameters

- **chip** –Pointer to identify flash chip. Must have been successfully initialised via esp_flash_init()
- **buffer** –Pointer to a buffer where the data will be read. To get better performance, this should be in the DRAM and word aligned.
- **address** –Address on flash to read from. Must be less than chip->size field.
- **length** –Length (in bytes) of data to read.

Returns

- ESP_OK: success
- ESP_ERR_NO_MEM: Buffer is in external PSRAM which cannot be concurrently accessed, and a temporary internal buffer could not be allocated.
- or a flash error code if operation failed.

esp_err_t **esp_flash_write**(*esp_flash_t* *chip, const void *buffer, uint32_t address, uint32_t length)

Write data to the SPI flash chip.

There are no alignment constraints on buffer, address or length.

Parameters

- **chip** –Pointer to identify flash chip. Must have been successfully initialised via esp_flash_init()
- **address** –Address on flash to write to. Must be previously erased (SPI NOR flash can only write bits 1->0).
- **buffer** –Pointer to a buffer with the data to write. To get better performance, this should be in the DRAM and word aligned.
- **length** –Length (in bytes) of data to write.

Returns

- ESP_OK on success,
- ESP_ERR_NOT_SUPPORTED if the chip is not able to perform the operation. This is indicated by WREN = 1 after the command is sent.
- Other flash error code if operation failed.

esp_err_t **esp_flash_write_encrypted**(*esp_flash_t* *chip, uint32_t address, const void *buffer, uint32_t length)

Encrypted and write data to the SPI flash chip using on-chip hardware flash encryption.

Note: Both address & length must be 16 byte aligned, as this is the encryption block size

---

Parameters

- **chip** –Pointer to identify flash chip. Must be NULL (the main flash chip). For other chips, encrypted write is not supported.
- **address** –Address on flash to write to. 16 byte aligned. Must be previously erased (SPI NOR flash can only write bits 1->0).
- **buffer** –Pointer to a buffer with the data to write.
- **length** –Length (in bytes) of data to write. 16 byte aligned.

Returns

- ESP_OK: on success
- ESP_ERR_NOT_SUPPORTED: encrypted write not supported for this chip.
- ESP_ERR_INVALID_ARG: Either the address, buffer or length is invalid.
- or other flash error code from spi_flash_write_encrypted().

esp_err_t **esp_flash_read_encrypted**(*esp_flash_t* *chip, uint32_t address, void *out_buffer, uint32_t length)

Read and decrypt data from the SPI flash chip using on-chip hardware flash encryption.

Parameters

- **chip** –Pointer to identify flash chip. Must be NULL (the main flash chip). For other chips, encrypted read is not supported.
- **address** –Address on flash to read from.
- **out_buffer** –Pointer to a buffer for the data to read to.
- **length** –Length (in bytes) of data to read.

Returns

- ESP_OK: on success
- ESP_ERR_NOT_SUPPORTED: encrypted read not supported for this chip.
- or other flash error code from spi_flash_read_encrypted().

static inline bool **esp_flash_is_quad_mode**(const *esp_flash_t* *chip)

Returns true if chip is configured for Quad I/O or Quad Fast Read.

Parameters **chip** –Pointer to SPI flash chip to use. If NULL, esp_flash_default_chip is substituted.

Returns true if flash works in quad mode, otherwise false

Structures

struct **esp_flash_region_t**

Structure for describing a region of flash.

Public Members

uint32_t **offset**

Start address of this region.

uint32_t **size**

Size of the region.

struct **esp_flash_os_functions_t**

OS-level integration hooks for accessing flash chips inside a running OS.

It's in the public header because some instances should be allocated statically in the startup code. May be updated according to hardware version and new flash chip feature requirements, shouldn't be treated as public API.

For advanced developers, you may replace some of them with your implementations at your own risk.

Public Members

esp_err_t (***start**)(void *arg)

Called before commencing any flash operation. Does not need to be recursive (ie is called at most once for each call to 'end').

esp_err_t (***end**)(void *arg)

Called after completing any flash operation.

esp_err_t (***region_protected**)(void *arg, size_t start_addr, size_t size)

Called before any erase/write operations to check whether the region is limited by the OS

esp_err_t (***delay_us**)(void *arg, uint32_t us)

Delay for at least 'us' microseconds. Called in between 'start' and 'end'.

void *(***get_temp_buffer**)(void *arg, size_t reqest_size, size_t *out_size)

Called for get temp buffer when buffer from application cannot be directly read into/write from.

void (***release_temp_buffer**)(void *arg, void *temp_buf)

Called for release temp buffer.

esp_err_t (***check_yield**)(void *arg, uint32_t chip_status, uint32_t *out_request)

Yield to other tasks. Called during erase operations.

Return ESP_OK means yield needs to be called (got an event to handle), while ESP_ERR_TIMEOUT means skip yield.

esp_err_t (***yield**)(void *arg, uint32_t *out_status)

Yield to other tasks. Called during erase operations.

int64_t (***get_system_time**)(void *arg)

Called for get system time.

struct **esp_flash_t**

Structure to describe a SPI flash chip connected to the system.

Structure must be initialized before use (passed to esp_flash_init()). It's in the public header because some instances should be allocated statically in the startup code. May be updated according to hardware version and new flash chip feature requirements, shouldn't be treated as public API.

For advanced developers, you may replace some of them with your implementations at your own risk.

Public Members

spi_flash_host_inst_t ***host**

Pointer to hardware-specific "host_driver" structure. Must be initialized before used.

const *spi_flash_chip_t* ***chip_drv**

Pointer to chip-model-specific "adapter" structure. If NULL, will be detected during initialisation.

const *esp_flash_os_functions_t* ***os_func**

Pointer to os-specific hook structure. Call `esp_flash_init_os_functions()` to setup this field, after the host is properly initialized.

void ***os_func_data**

Pointer to argument for os-specific hooks. Left NULL and will be initialized with `os_func`.

esp_flash_io_mode_t **read_mode**

Configured SPI flash read mode. Set before `esp_flash_init` is called.

uint32_t **size**

Size of SPI flash in bytes. If 0, size will be detected during initialisation.

uint32_t **chip_id**

Detected chip id.

uint32_t **busy**

This flag is used to verify chip’ s status.

uint32_t **reserved_flags**

reserved.

Macros

SPI_FLASH_YIELD_REQ_YIELD

SPI_FLASH_YIELD_REQ_SUSPEND

SPI_FLASH_YIELD_STA_RESUME

Type Definitions

typedef struct *spi_flash_chip_t* **spi_flash_chip_t**

typedef struct *esp_flash_t* **esp_flash_t**

Header File

- components/hal/include/hal/spi_flash_types.h

Structures

struct **spi_flash_trans_t**

Definition of a common transaction. Also holds the return value.

Public Members

uint8_t **reserved**

Reserved, must be 0.

uint8_t **mosi_len**

Output data length, in bytes.

uint8_t **miso_len**

Input data length, in bytes.

uint8_t **address_bitlen**

Length of address in bits, set to 0 if command does not need an address.

uint32_t **address**

Address to perform operation on.

const uint8_t ***mosi_data**

Output data to salve.

uint8_t *__miso_data__

[out] Input data from slave, little endian

uint32_t __flags__

Flags for this transaction. Set to 0 for now.

uint16_t __command__

Command to send.

uint8_t __dummy_bitlen__

Basic dummy bits to use.

uint32_t __io_mode__

Flash working mode when `SPI_FLASH_IGNORE_BASEIO` is specified.

struct __spi_flash_sus_cmd_conf__

Configuration structure for the flash chip suspend feature.

Public Members

uint32_t __sus_mask__

SUS/SUS1/SUS2 bit in flash register.

uint32_t __cmd_rdsr__

Read flash status register(2) command.

uint32_t __sus_cmd__

Flash suspend command.

uint32_t __res_cmd__

Flash resume command.

uint32_t __reserved__

Reserved, set to 0.

struct __spi_flash_encryption_t__

Structure for flash encryption operations.

Public Members

void (*__flash_encryption_enable__)(void)

Enable the flash encryption.

void (*__flash_encryption_disable__)(void)

Disable the flash encryption.

void (*`flash_encryption_data_prepare`)(uint32_t address, const uint32_t *buffer, uint32_t size)

Prepare flash encryption before operation.

Note: address and buffer must be 8-word aligned.

Param address The destination address in flash for the write operation.
Param buffer Data for programming
Param size Size to program.

void (*`flash_encryption_done`)(void)

flash data encryption operation is done.

void (*`flash_encryption_destroy`)(void)

Destroy encrypted result

bool (*`flash_encryption_check`)(uint32_t address, uint32_t length)

Check if is qualified to encrypt the buffer

Param address the address of written flash partition.
Param length Buffer size.

struct `spi_flash_host_inst_t`

SPI Flash Host driver instance

Public Members

const struct *spi_flash_host_driver_s* *`driver`

Pointer to the implementation function table.

struct `spi_flash_host_driver_s`

Host driver configuration and context structure.

Public Members

esp_err_t (*`dev_config`)(*spi_flash_host_inst_t* *host)

Configure the device-related register before transactions. This saves some time to re-configure those registers when we send continuously

esp_err_t (*`common_command`)(*spi_flash_host_inst_t* *host, *spi_flash_trans_t* *t)

Send an user-defined spi transaction to the device.

esp_err_t (*`read_id`)(*spi_flash_host_inst_t* *host, uint32_t *id)

Read flash ID.

void (*`erase_chip`)(*spi_flash_host_inst_t* *host)

Erase whole flash chip.

void (***erase_sector**)(*spi_flash_host_inst_t* *host, uint32_t start_address)

Erase a specific sector by its start address.

void (***erase_block**)(*spi_flash_host_inst_t* *host, uint32_t start_address)

Erase a specific block by its start address.

esp_err_t (***read_status**)(*spi_flash_host_inst_t* *host, uint8_t *out_sr)

Read the status of the flash chip.

esp_err_t (***set_write_protect**)(*spi_flash_host_inst_t* *host, bool wp)

Disable write protection.

void (***program_page**)(*spi_flash_host_inst_t* *host, const void *buffer, uint32_t address, uint32_t length)

Program a page of the flash. Check `max_write_bytes` for the maximum allowed writing length.

bool (***supports_direct_write**)(*spi_flash_host_inst_t* *host, const void *p)

Check whether given buffer can be directly used to write

int (***write_data_slicer**)(*spi_flash_host_inst_t* *host, uint32_t address, uint32_t len, uint32_t *align_addr, uint32_t page_size)

Slicer for write data. The `program_page` should be called iteratively with the return value of this function.

Param address Beginning flash address to write
Param len Length request to write
Param align_addr Output of the aligned address to write to
Param page_size Physical page size of the flash chip
Return Length that can be actually written in one `program_page` call

esp_err_t (***read**)(*spi_flash_host_inst_t* *host, void *buffer, uint32_t address, uint32_t read_len)

Read data from the flash. Check `max_read_bytes` for the maximum allowed reading length.

bool (***supports_direct_read**)(*spi_flash_host_inst_t* *host, const void *p)

Check whether given buffer can be directly used to read

int (***read_data_slicer**)(*spi_flash_host_inst_t* *host, uint32_t address, uint32_t len, uint32_t *align_addr, uint32_t page_size)

Slicer for read data. The `read` should be called iteratively with the return value of this function.

Param address Beginning flash address to read
Param len Length request to read
Param align_addr Output of the aligned address to read
Param page_size Physical page size of the flash chip
Return Length that can be actually read in one `read` call

uint32_t (***host_status**)(*spi_flash_host_inst_t* *host)

Check the host status, 0:busy, 1:idle, 2:suspended.

esp_err_t (***configure_host_io_mode**)(*spi_flash_host_inst_t* *host, uint32_t command, uint32_t addr_bitlen, int dummy_bitlen_base, *esp_flash_io_mode_t* io_mode)

Configure the host to work at different read mode. Responsible to compensate the timing and set IO mode.

void (*`poll_cmd_done`)(*spi_flash_host_inst_t* *host)

Internal use, poll the HW until the last operation is done.

esp_err_t (*`flush_cache`)(*spi_flash_host_inst_t* *host, uint32_t addr, uint32_t size)

For some host (SPI1), they are shared with a cache. When the data is modified, the cache needs to be flushed. Left NULL if not supported.

void (*`check_suspend`)(*spi_flash_host_inst_t* *host)

Suspend check erase/program operation, reserved for ESP32-C3 and ESP32-S3 spi flash ROM IMPL.

void (*`resume`)(*spi_flash_host_inst_t* *host)

Resume flash from suspend manually

void (*`suspend`)(*spi_flash_host_inst_t* *host)

Set flash in suspend status manually

esp_err_t (*`sus_setup`)(*spi_flash_host_inst_t* *host, const *spi_flash_sus_cmd_conf* *sus_conf)

Suspend feature setup for setting cmd and status register mask.

Macros

`SPI_FLASH_TRANS_FLAG_CMD16`

Send command of 16 bits.

`SPI_FLASH_TRANS_FLAG_IGNORE_BASEIO`

Not applying the basic io mode configuration for this transaction.

`SPI_FLASH_TRANS_FLAG_BYTE_SWAP`

Used for DTR mode, to swap the bytes of a pair of rising/falling edge.

`ESP_FLASH_SPEED_MIN`

Lowest speed supported by the driver, currently 5 MHz.

`SPI_FLASH_CONFIG_CONF_BITS`

OR the io_mode with this mask, to enable the dummy output feature or replace the first several dummy bits into address to meet the requirements of conf bits. (Used in DIO/QIO/OIO mode)

`SPI_FLASH_OPI_FLAG`

A flag for flash work in opi mode, the io mode below are opi, above are SPI/QSPI mode. DO NOT use this value in any API.

`SPI_FLASH_READ_MODE_MIN`

Slowest io mode supported by ESP32, currently SlowRd.

Type Definitions

typedef struct *spi_flash_host_driver_s* **`spi_flash_host_driver_t`**

Enumerations

enum **esp_flash_speed_t**

SPI flash clock speed values, always refer to them by the enum rather than the actual value (more speed may be appended into the list).

A strategy to select the maximum allowed speed is to enumerate from the `ESP_FLSH_SPEED_MAX-1` or highest frequency supported by your flash, and decrease the speed until the probing success.

Values:

enumerator **ESP_FLASH_5MHZ**

The flash runs under 5MHz.

enumerator **ESP_FLASH_10MHZ**

The flash runs under 10MHz.

enumerator **ESP_FLASH_20MHZ**

The flash runs under 20MHz.

enumerator **ESP_FLASH_26MHZ**

The flash runs under 26MHz.

enumerator **ESP_FLASH_40MHZ**

The flash runs under 40MHz.

enumerator **ESP_FLASH_80MHZ**

The flash runs under 80MHz.

enumerator **ESP_FLASH_120MHZ**

The flash runs under 120MHz, 120MHZ can only be used by main flash after timing tuning in system. Do not use this directely in any API.

enumerator **ESP_FLASH_SPEED_MAX**

The maximum frequency supported by the host is `ESP_FLASH_SPEED_MAX-1`.

enum **esp_flash_io_mode_t**

Mode used for reading from SPI flash.

Values:

enumerator **SPI_FLASH_SLOWRD**

Data read using single I/O, some limits on speed.

enumerator **SPI_FLASH_FASTRD**

Data read using single I/O, no limit on speed.

enumerator **SPI_FLASH_DOUT**

Data read using dual I/O.

enumerator **SPI_FLASH_DIO**

Both address & data transferred using dual I/O.

enumerator **SPI_FLASH_QOUT**

Data read using quad I/O.

enumerator **SPI_FLASH_QIO**

Both address & data transferred using quad I/O.

enumerator **SPI_FLASH_OPI_STR**

Only support on OPI flash, flash read and write under STR mode.

enumerator **SPI_FLASH_OPI_DTR**

Only support on OPI flash, flash read and write under DTR mode.

enumerator **SPI_FLASH_READ_MODE_MAX**

The fastest io mode supported by the host is `ESP_FLASH_READ_MODE_MAX-1`.

API Reference - Partition Table

Header File

- components/spi_flash/include/esp_partition.h

Functions

esp_partition_iterator_t **esp_partition_find**(*esp_partition_type_t* type, *esp_partition_subtype_t* subtype, const char *label)

Find partition based on one or more parameters.

Parameters

- **type** –Partition type, one of esp_partition_type_t values or an 8-bit unsigned integer. To find all partitions, no matter the type, use ESP_PARTITION_TYPE_ANY, and set subtype argument to ESP_PARTITION_SUBTYPE_ANY.
- **subtype** –Partition subtype, one of esp_partition_subtype_t values or an 8-bit unsigned integer. To find all partitions of given type, use ESP_PARTITION_SUBTYPE_ANY.
- **label** –(optional) Partition label. Set this value if looking for partition with a specific name. Pass NULL otherwise.

Returns iterator which can be used to enumerate all the partitions found, or NULL if no partitions were found. Iterator obtained through this function has to be released using esp_partition_iterator_release when not used any more.

const *esp_partition_t* ***esp_partition_find_first**(*esp_partition_type_t* type, *esp_partition_subtype_t* subtype, const char *label)

Find first partition based on one or more parameters.

Parameters

- **type** –Partition type, one of esp_partition_type_t values or an 8-bit unsigned integer. To find all partitions, no matter the type, use ESP_PARTITION_TYPE_ANY, and set subtype argument to ESP_PARTITION_SUBTYPE_ANY.
- **subtype** –Partition subtype, one of esp_partition_subtype_t values or an 8-bit unsigned integer To find all partitions of given type, use ESP_PARTITION_SUBTYPE_ANY.
- **label** –(optional) Partition label. Set this value if looking for partition with a specific name. Pass NULL otherwise.

Returns pointer to *esp_partition_t* structure, or NULL if no partition is found. This pointer is valid for the lifetime of the application.

const *esp_partition_t* ***esp_partition_get**(*esp_partition_iterator_t* iterator)

Get *esp_partition_t* structure for given partition.

Parameters **iterator** –Iterator obtained using esp_partition_find. Must be non-NULL.
Returns pointer to *esp_partition_t* structure. This pointer is valid for the lifetime of the application.

esp_partition_iterator_t **esp_partition_next**(*esp_partition_iterator_t* iterator)

Move partition iterator to the next partition found.

Any copies of the iterator will be invalid after this call.

Parameters **iterator** –Iterator obtained using esp_partition_find. Must be non-NULL.
Returns NULL if no partition was found, valid esp_partition_iterator_t otherwise.

void **esp_partition_iterator_release**(*esp_partition_iterator_t* iterator)

Release partition iterator.

Parameters **iterator** –Iterator obtained using esp_partition_find. The iterator is allowed to be NULL, so it is not necessary to check its value before calling this function.

const *esp_partition_t* ***esp_partition_verify**(const *esp_partition_t* *partition)

Verify partition data.

Given a pointer to partition data, verify this partition exists in the partition table (all fields match.)

This function is also useful to take partition data which may be in a RAM buffer and convert it to a pointer to the permanent partition data stored in flash.

Pointers returned from this function can be compared directly to the address of any pointer returned from *esp_partition_get()*, as a test for equality.

Parameters **partition** –Pointer to partition data to verify. Must be non-NULL. All fields of this structure must match the partition table entry in flash for this function to return a successful match.
Returns
- If partition not found, returns NULL.
- If found, returns a pointer to the *esp_partition_t* structure in flash. This pointer is always valid for the lifetime of the application.

esp_err_t **esp_partition_read**(const *esp_partition_t* *partition, size_t src_offset, void *dst, size_t size)

Read data from the partition.

Partitions marked with an encryption flag will automatically be be read and decrypted via a cache mapping.

Parameters
- **partition** –Pointer to partition structure obtained using esp_partition_find_first or esp_partition_get. Must be non-NULL.
- **dst** –Pointer to the buffer where data should be stored. Pointer must be non-NULL and buffer must be at least ‘size’ bytes long.
- **src_offset** –Address of the data to be read, relative to the beginning of the partition.
- **size** –Size of data to be read, in bytes.

Returns ESP_OK, if data was read successfully; ESP_ERR_INVALID_ARG, if src_offset exceeds partition size; ESP_ERR_INVALID_SIZE, if read would go out of bounds of the partition; or one of error codes from lower-level flash driver.

esp_err_t **esp_partition_write**(const *esp_partition_t* *partition, size_t dst_offset, const void *src, size_t size)

Write data to the partition.

Before writing data to flash, corresponding region of flash needs to be erased. This can be done using esp_partition_erase_range function.

Partitions marked with an encryption flag will automatically be written via the spi_flash_write_encrypted() function. If writing to an encrypted partition, all write offsets and lengths must be multiples of 16 bytes. See the spi_flash_write_encrypted() function for more details. Unencrypted partitions do not have this restriction.

Note: Prior to writing to flash memory, make sure it has been erased with esp_partition_erase_range call.

Parameters

- **partition** –Pointer to partition structure obtained using esp_partition_find_first or esp_partition_get. Must be non-NULL.
- **dst_offset** –Address where the data should be written, relative to the beginning of the partition.
- **src** –Pointer to the source buffer. Pointer must be non-NULL and buffer must be at least 'size' bytes long.
- **size** –Size of data to be written, in bytes.

Returns ESP_OK, if data was written successfully; ESP_ERR_INVALID_ARG, if dst_offset exceeds partition size; ESP_ERR_INVALID_SIZE, if write would go out of bounds of the partition; or one of error codes from lower-level flash driver.

esp_err_t **esp_partition_read_raw**(const *esp_partition_t* *partition, size_t src_offset, void *dst, size_t size)

Read data from the partition without any transformation/decryption.

Note: This function is essentially the same as *esp_partition_read()* above. It just never decrypts data but returns it as is.

Parameters

- **partition** –Pointer to partition structure obtained using esp_partition_find_first or esp_partition_get. Must be non-NULL.
- **dst** –Pointer to the buffer where data should be stored. Pointer must be non-NULL and buffer must be at least 'size' bytes long.
- **src_offset** –Address of the data to be read, relative to the beginning of the partition.
- **size** –Size of data to be read, in bytes.

Returns ESP_OK, if data was read successfully; ESP_ERR_INVALID_ARG, if src_offset exceeds partition size; ESP_ERR_INVALID_SIZE, if read would go out of bounds of the partition; or one of error codes from lower-level flash driver.

esp_err_t **esp_partition_write_raw**(const *esp_partition_t* *partition, size_t dst_offset, const void *src, size_t size)

Write data to the partition without any transformation/encryption.

Before writing data to flash, corresponding region of flash needs to be erased. This can be done using esp_partition_erase_range function.

Note: This function is essentially the same as *esp_partition_write()* above. It just never encrypts data but writes it as is.

Note: Prior to writing to flash memory, make sure it has been erased with esp_partition_erase_range call.

Parameters

- **partition** –Pointer to partition structure obtained using esp_partition_find_first or esp_partition_get. Must be non-NULL.
- **dst_offset** –Address where the data should be written, relative to the beginning of the partition.
- **src** –Pointer to the source buffer. Pointer must be non-NULL and buffer must be at least 'size' bytes long.
- **size** –Size of data to be written, in bytes.

Returns ESP_OK, if data was written successfully; ESP_ERR_INVALID_ARG, if dst_offset exceeds partition size; ESP_ERR_INVALID_SIZE, if write would go out of bounds of the partition; or one of the error codes from lower-level flash driver.

esp_err_t **esp_partition_erase_range** (const *esp_partition_t* *partition, size_t offset, size_t size)

Erase part of the partition.

Parameters

- **partition** –Pointer to partition structure obtained using esp_partition_find_first or esp_partition_get. Must be non-NULL.
- **offset** –Offset from the beginning of partition where erase operation should start. Must be aligned to 4 kilobytes.
- **size** –Size of the range which should be erased, in bytes. Must be divisible by 4 kilobytes.

Returns ESP_OK, if the range was erased successfully; ESP_ERR_INVALID_ARG, if iterator or dst are NULL; ESP_ERR_INVALID_SIZE, if erase would go out of bounds of the partition; or one of error codes from lower-level flash driver.

esp_err_t **esp_partition_mmap** (const *esp_partition_t* *partition, size_t offset, size_t size, spi_flash_mmap_memory_t memory, const void **out_ptr, spi_flash_mmap_handle_t *out_handle)

Configure MMU to map partition into data memory.

Unlike spi_flash_mmap function, which requires a 64kB aligned base address, this function doesn't impose such a requirement. If offset results in a flash address which is not aligned to 64kB boundary, address will be rounded to the lower 64kB boundary, so that mapped region includes requested range. Pointer returned via out_ptr argument will be adjusted to point to the requested offset (not necessarily to the beginning of mmap-ed region).

To release mapped memory, pass handle returned via out_handle argument to spi_flash_munmap function.

Parameters

- **partition** –Pointer to partition structure obtained using esp_partition_find_first or esp_partition_get. Must be non-NULL.
- **offset** –Offset from the beginning of partition where mapping should start.
- **size** –Size of the area to be mapped.
- **memory** –Memory space where the region should be mapped
- **out_ptr** –Output, pointer to the mapped memory region
- **out_handle** –Output, handle which should be used for spi_flash_munmap call

Returns ESP_OK, if successful

esp_err_t **esp_partition_get_sha256** (const *esp_partition_t* *partition, uint8_t *sha_256)

Get SHA-256 digest for required partition.

For apps with SHA-256 appended to the app image, the result is the appended SHA-256 value for the app image content. The hash is verified before returning, if app content is invalid then the function returns ESP_ERR_IMAGE_INVALID. For apps without SHA-256 appended to the image, the result is the SHA-256 of all bytes in the app image. For other partition types, the result is the SHA-256 of the entire partition.

Parameters

- **partition** –**[in]** Pointer to info for partition containing app or data. (fields: address, size and type, are required to be filled).
- **sha_256** –**[out]** Returned SHA-256 digest for a given partition.

Returns

- ESP_OK: In case of successful operation.
- ESP_ERR_INVALID_ARG: The size was 0 or the sha_256 was NULL.
- ESP_ERR_NO_MEM: Cannot allocate memory for sha256 operation.
- ESP_ERR_IMAGE_INVALID: App partition doesn't contain a valid app image.
- ESP_FAIL: An allocation error occurred.

bool **esp_partition_check_identity** (const *esp_partition_t* *partition_1, const *esp_partition_t* *partition_2)

Check for the identity of two partitions by SHA-256 digest.

Parameters

- **partition_1** –**[in]** Pointer to info for partition 1 containing app or data. (fields: address, size and type, are required to be filled).
- **partition_2** –**[in]** Pointer to info for partition 2 containing app or data. (fields: address, size and type, are required to be filled).

Returns

- True: In case of the two firmware is equal.
- False: Otherwise

esp_err_t **esp_partition_register_external**(*esp_flash_t* *flash_chip, size_t offset, size_t size, const char *label, *esp_partition_type_t* type, *esp_partition_subtype_t* subtype, const *esp_partition_t* **out_partition)

Register a partition on an external flash chip.

This API allows designating certain areas of external flash chips (identified by the *esp_flash_t* structure) as partitions. This allows using them with components which access SPI flash through the esp_partition API.

Parameters

- **flash_chip** –Pointer to the structure identifying the flash chip
- **offset** –Address in bytes, where the partition starts
- **size** –Size of the partition in bytes
- **label** –Partition name
- **type** –One of the partition types (ESP_PARTITION_TYPE_*), or an integer. Note that applications can not be booted from external flash chips, so using ESP_PARTITION_TYPE_APP is not supported.
- **subtype** –One of the partition subtypes (ESP_PARTITION_SUBTYPE_*), or an integer.
- **out_partition** –**[out]** Output, if non-NULL, receives the pointer to the resulting *esp_partition_t* structure

Returns

- ESP_OK on success
- ESP_ERR_NOT_SUPPORTED if CONFIG_CONFIG_SPI_FLASH_USE_LEGACY_IMPL is enabled
- ESP_ERR_NO_MEM if memory allocation has failed
- ESP_ERR_INVALID_ARG if the new partition overlaps another partition on the same flash chip
- ESP_ERR_INVALID_SIZE if the partition doesn't fit into the flash chip size

esp_err_t **esp_partition_deregister_external**(const *esp_partition_t* *partition)

Deregister the partition previously registered using esp_partition_register_external.

Parameters **partition** –pointer to the partition structure obtained from esp_partition_register_external,

Returns

- ESP_OK on success
- ESP_ERR_NOT_FOUND if the partition pointer is not found
- ESP_ERR_INVALID_ARG if the partition comes from the partition table
- ESP_ERR_INVALID_ARG if the partition was not registered using esp_partition_register_external function.

Structures

struct **esp_partition_t**

partition information structure

This is not the format in flash, that format is esp_partition_info_t.

However, this is the format used by this API.

Public Members

esp_flash_t ***flash_chip**

SPI flash chip on which the partition resides

esp_partition_type_t **type**

partition type (app/data)

esp_partition_subtype_t **subtype**

partition subtype

uint32_t **address**

starting address of the partition in flash

uint32_t **size**

size of the partition, in bytes

char **label**[17]

partition label, zero-terminated ASCII string

bool **encrypted**

flag is set to true if partition is encrypted

Macros

ESP_PARTITION_SUBTYPE_OTA(i)

Convenience macro to get esp_partition_subtype_t value for the i-th OTA partition.

Type Definitions

typedef struct esp_partition_iterator_opaque_ ***esp_partition_iterator_t**

Opaque partition iterator type.

Enumerations

enum **esp_partition_type_t**

Partition type.

Note: Partition types with integer value 0x00-0x3F are reserved for partition types defined by ESP-IDF. Any other integer value 0x40-0xFE can be used by individual applications, without restriction.

Values:

enumerator **ESP_PARTITION_TYPE_APP**

Application partition type.

enumerator **ESP_PARTITION_TYPE_DATA**

Data partition type.

enumerator **ESP_PARTITION_TYPE_ANY**

Used to search for partitions with any type.

enum **esp_partition_subtype_t**

Partition subtype.

Application-defined partition types (0x40-0xFE) can set any numeric subtype value.

Note: These ESP-IDF-defined partition subtypes apply to partitions of type ESP_PARTITION_TYPE_APP and ESP_PARTITION_TYPE_DATA.

Values:

enumerator **ESP_PARTITION_SUBTYPE_APP_FACTORY**

Factory application partition.

enumerator **ESP_PARTITION_SUBTYPE_APP_OTA_MIN**

Base for OTA partition subtypes.

enumerator **ESP_PARTITION_SUBTYPE_APP_OTA_0**

OTA partition 0.

enumerator **ESP_PARTITION_SUBTYPE_APP_OTA_1**

OTA partition 1.

enumerator **ESP_PARTITION_SUBTYPE_APP_OTA_2**

OTA partition 2.

enumerator **ESP_PARTITION_SUBTYPE_APP_OTA_3**

OTA partition 3.

enumerator **ESP_PARTITION_SUBTYPE_APP_OTA_4**

OTA partition 4.

enumerator **ESP_PARTITION_SUBTYPE_APP_OTA_5**

OTA partition 5.

enumerator **ESP_PARTITION_SUBTYPE_APP_OTA_6**

OTA partition 6.

enumerator **ESP_PARTITION_SUBTYPE_APP_OTA_7**

OTA partition 7.

enumerator **ESP_PARTITION_SUBTYPE_APP_OTA_8**

OTA partition 8.

enumerator **ESP_PARTITION_SUBTYPE_APP_OTA_9**

OTA partition 9.

enumerator **ESP_PARTITION_SUBTYPE_APP_OTA_10**
OTA partition 10.

enumerator **ESP_PARTITION_SUBTYPE_APP_OTA_11**
OTA partition 11.

enumerator **ESP_PARTITION_SUBTYPE_APP_OTA_12**
OTA partition 12.

enumerator **ESP_PARTITION_SUBTYPE_APP_OTA_13**
OTA partition 13.

enumerator **ESP_PARTITION_SUBTYPE_APP_OTA_14**
OTA partition 14.

enumerator **ESP_PARTITION_SUBTYPE_APP_OTA_15**
OTA partition 15.

enumerator **ESP_PARTITION_SUBTYPE_APP_OTA_MAX**
Max subtype of OTA partition.

enumerator **ESP_PARTITION_SUBTYPE_APP_TEST**
Test application partition.

enumerator **ESP_PARTITION_SUBTYPE_DATA_OTA**
OTA selection partition.

enumerator **ESP_PARTITION_SUBTYPE_DATA_PHY**
PHY init data partition.

enumerator **ESP_PARTITION_SUBTYPE_DATA_NVS**
NVS partition.

enumerator **ESP_PARTITION_SUBTYPE_DATA_COREDUMP**
COREDUMP partition.

enumerator **ESP_PARTITION_SUBTYPE_DATA_NVS_KEYS**
Partition for NVS keys.

enumerator **ESP_PARTITION_SUBTYPE_DATA_EFUSE_EM**
Partition for emulate eFuse bits.

enumerator **ESP_PARTITION_SUBTYPE_DATA_UNDEFINED**
Undefined (or unspecified) data partition.

enumerator **ESP_PARTITION_SUBTYPE_DATA_ESPHTTPD**
ESPHTTPD partition.

enumerator **ESP_PARTITION_SUBTYPE_DATA_FAT**

FAT partition.

enumerator **ESP_PARTITION_SUBTYPE_DATA_SPIFFS**

SPIFFS partition.

enumerator **ESP_PARTITION_SUBTYPE_ANY**

Used to search for partitions with any subtype.

API Reference - Flash Encrypt

Header File

- components/bootloader_support/include/esp_flash_encrypt.h

Functions

static inline bool **esp_flash_encryption_enabled**(void)

Is flash encryption currently enabled in hardware?

Flash encryption is enabled if the FLASH_CRYPT_CNT efuse has an odd number of bits set.

Returns true if flash encryption is enabled.

esp_err_t **esp_flash_encrypt_check_and_update**(void)

esp_err_t **esp_flash_encrypt_region**(uint32_t src_addr, size_t data_length)

Encrypt-in-place a block of flash sectors.

Note: This function resets RTC_WDT between operations with sectors.

Parameters

- **src_addr** –Source offset in flash. Should be multiple of 4096 bytes.
- **data_length** –Length of data to encrypt in bytes. Will be rounded up to next multiple of 4096 bytes.

Returns ESP_OK if all operations succeeded, ESP_ERR_FLASH_OP_FAIL if SPI flash fails, ESP_ERR_FLASH_OP_TIMEOUT if flash times out.

void **esp_flash_write_protect_crypt_cnt**(void)

Write protect FLASH_CRYPT_CNT.

Intended to be called as a part of boot process if flash encryption is enabled but secure boot is not used. This should protect against serial re-flashing of an unauthorised code in absence of secure boot.

Note: On ESP32 V3 only, write protecting FLASH_CRYPT_CNT will also prevent disabling UART Download Mode. If both are wanted, call esp_efuse_disable_rom_download_mode() before calling this function.

---

esp_flash_enc_mode_t **esp_get_flash_encryption_mode**(void)

Return the flash encryption mode.

The API is called during boot process but can also be called by application to check the current flash encryption mode of ESP32

Returns

void **esp_flash_encryption_init_checks**(void)

Check the flash encryption mode during startup.

Verifies the flash encryption config during startup:

- Correct any insecure flash encryption settings if hardware Secure Boot is enabled.
- Log warnings if the efuse config doesn't match the project config in any way

Note: This function is called automatically during app startup, it doesn't need to be called from the app.

esp_err_t **esp_flash_encryption_enable_secure_features**(void)

Set all secure eFuse features related to flash encryption.

Returns

- ESP_OK - Successfully

void **esp_flash_encryption_set_release_mode**(void)

Switches Flash Encryption from "Development" to "Release".

If already in "Release" mode, the function will do nothing. If flash encryption efuse is not enabled yet then abort. It burns:

- " disable encrypt in dl mode"
- set FLASH_CRYPT_CNT efuse to max

Enumerations

enum **esp_flash_enc_mode_t**

Values:

enumerator **ESP_FLASH_ENC_MODE_DISABLED**

enumerator **ESP_FLASH_ENC_MODE_DEVELOPMENT**

enumerator **ESP_FLASH_ENC_MODE_RELEASE**

2.6.7 SPIFFS Filesystem

Overview

SPIFFS is a file system intended for SPI NOR flash devices on embedded targets. It supports wear levelling, file system consistency checks, and more.

Notes

- Currently, SPIFFS does not support directories, it produces a flat structure. If SPIFFS is mounted under `/spiffs`, then creating a file with the path `/spiffs/tmp/myfile.txt` will create a file called `/tmp/myfile.txt` in SPIFFS, instead of `myfile.txt` in the directory `/spiffs/tmp`.
- It is not a real-time stack. One write operation might take much longer than another.
- For now, it does not detect or handle bad blocks.

- SPIFFS is able to reliably utilize only around 75% of assigned partition space.
- When the filesystem is running out of space, the garbage collector is trying to find free space by scanning the filesystem multiple times, which can take up to several seconds per write function call, depending on required space. This is caused by the SPIFFS design and the issue has been reported multiple times (e.g. here) and in the official SPIFFS github repository. The issue can be partially mitigated by the SPIFFS configuration.
- Deleting a file does not always remove the whole file, which leaves unusable sections throughout the filesystem.
- When ESP32 experiences a power loss during a file system operation it could result in SPIFFS corruption. However the file system still might be recovered via `esp_spiffs_check` function. More details in the official SPIFFS *FAQ <https://github.com/pellepl/spiffs/wiki/FAQ>*.

Tools

spiffsgen.py spiffsgen.py is a write-only Python SPIFFS implementation used to create filesystem images from the contents of a host folder. To use `spiffsgen.py`, open Terminal and run:

```
python spiffsgen.py <image_size> <base_dir> <output_file>
```

The required arguments are as follows:

- **image_size**: size of the partition onto which the created SPIFFS image will be flashed.
- **base_dir**: directory for which the SPIFFS image needs to be created.
- **output_file**: SPIFFS image output file.

There are also other arguments that control image generation. Documentation on these arguments can be found in the tool's help:

```
python spiffsgen.py --help
```

These optional arguments correspond to a possible SPIFFS build configuration. To generate the right image, please make sure that you use the same arguments/configuration as were used to build SPIFFS. As a guide, the help output indicates the SPIFFS build configuration to which the argument corresponds. In cases when these arguments are not specified, the default values shown in the help output will be used.

When the image is created, it can be flashed using `esptool.py` or `parttool.py`.

Aside from invoking the `spiffsgen.py` standalone by manually running it from the command line or a script, it is also possible to invoke `spiffsgen.py` directly from the build system by calling `spiffs_create_partition_image`.

Make:

```
SPIFFS_IMAGE_FLASH_IN_PROJECT := ...
SPIFFS_IMAGE_DEPENDS := ...
$(eval $(call spiffs_create_partition_image,<partition>,<base_dir>))
```

CMake:

```
spiffs_create_partition_image(<partition> <base_dir> [FLASH_IN_PROJECT] [DEPENDS␣
↪dep dep dep...])
```

This is more convenient as the build configuration is automatically passed to the tool, ensuring that the generated image is valid for that build. An example of this is while the *image_size* is required for the standalone invocation, only the *partition* name is required when using `spiffs_create_partition_image` –the image size is automatically obtained from the project's partition table.

Due to the differences in structure between Make and CMake, it is important to note that:

- for Make `spiffs_create_partition_image` must be called from the project Makefile
- for CMake `spiffs_create_partition_image` must be called from one of the component CMakeLists.txt files

Optionally, user can opt to have the image automatically flashed together with the app binaries, partition tables, etc. on `idf.py flash` or `make flash` by specifying `FLASH_IN_PROJECT`. For example,

in Make:

```
SPIFFS_IMAGE_FLASH_IN_PROJECT := 1
$(eval $(call spiffs_create_partition_image,<partition>,<base_dir>))
```

in CMake:

```
spiffs_create_partition_image(my_spiffs_partition my_folder FLASH_IN_PROJECT)
```

If FLASH_IN_PROJECT/SPIFFS_IMAGE_FLASH_IN_PROJECT is not specified, the image will still be generated, but you will have to flash it manually using `esptool.py`, `parttool.py`, or a custom build system target.

There are cases where the contents of the base directory itself is generated at build time. Users can use DEPENDS/SPIFFS_IMAGE_DEPENDS to specify targets that should be executed before generating the image.

in Make:

```
dep:
    ...

SPIFFS_IMAGE_DEPENDS := dep
$(eval $(call spiffs_create_partition_image,<partition>,<base_dir>))
```

in CMake:

```
add_custom_target(dep COMMAND ...)

spiffs_create_partition_image(my_spiffs_partition my_folder DEPENDS dep)
```

For an example, see storage/spiffsgen.

mkspiffs Another tool for creating SPIFFS partition images is mkspiffs. Similar to `spiffsgen.py`, it can be used to create an image from a given folder and then flash that image using `esptool.py`

For that, you need to obtain the following parameters:

- **Block Size**: 4096 (standard for SPI Flash)
- **Page Size**: 256 (standard for SPI Flash)
- **Image Size**: Size of the partition in bytes (can be obtained from a partition table)
- **Partition Offset**: Starting address of the partition (can be obtained from a partition table)

To pack a folder into a 1-Megabyte image, run:

```
mkspiffs -c [src_folder] -b 4096 -p 256 -s 0x100000 spiffs.bin
```

To flash the image onto ESP32 at offset 0x110000, run:

```
python esptool.py --chip esp32 --port [port] --baud [baud] write_flash -z 0x110000␣
↪spiffs.bin
```

Notes on which SPIFFS tool to use The two tools presented above offer very similar functionality. However, there are reasons to prefer one over the other, depending on the use case.

Use `spiffsgen.py` in the following cases:

1. If you want to simply generate a SPIFFS image during the build. `spiffsgen.py` makes it very convenient by providing functions/commands from the build system itself.
2. If the host has no C/C++ compiler available, because `spiffsgen.py` does not require compilation.

Use `mkspiffs` in the following cases:

1. If you need to unpack SPIFFS images in addition to image generation. For now, it is not possible with `spiffsgen.py`.

2. If you have an environment where a Python interpreter is not available, but a host compiler is available. Otherwise, a pre-compiled `mkspiffs` binary can do the job. However, there is no build system integration for `mkspiffs` and the user has to do the corresponding work: compiling `mkspiffs` during build (if a pre-compiled binary is not used), creating build rules/targets for the output files, passing proper parameters to the tool, etc.

See also

- *Partition Table documentation*

Application Example

An example of using SPIFFS is provided in the storage/spiffs directory. This example initializes and mounts a SPIFFS partition, then writes and reads data from it using POSIX and C library APIs. See the README.md file in the example directory for more information.

High-level API Reference

Header File

- components/spiffs/include/esp_spiffs.h

Functions

esp_err_t **esp_vfs_spiffs_register**(const *esp_vfs_spiffs_conf_t* *conf)

Register and mount SPIFFS to VFS with given path prefix.

Parameters **conf** – Pointer to *esp_vfs_spiffs_conf_t* configuration structure

Returns

- ESP_OK if success
- ESP_ERR_NO_MEM if objects could not be allocated
- ESP_ERR_INVALID_STATE if already mounted or partition is encrypted
- ESP_ERR_NOT_FOUND if partition for SPIFFS was not found
- ESP_FAIL if mount or format fails

esp_err_t **esp_vfs_spiffs_unregister**(const char *partition_label)

Unregister and unmount SPIFFS from VFS

Parameters **partition_label** – Same label as passed to esp_vfs_spiffs_register.

Returns

- ESP_OK if successful
- ESP_ERR_INVALID_STATE already unregistered

bool **esp_spiffs_mounted**(const char *partition_label)

Check if SPIFFS is mounted

Parameters **partition_label** – Optional, label of the partition to check. If not specified, first partition with subtype=spiffs is used.

Returns

- true if mounted
- false if not mounted

esp_err_t **esp_spiffs_format**(const char *partition_label)

Format the SPIFFS partition

Parameters **partition_label** – Same label as passed to esp_vfs_spiffs_register.

Returns

- ESP_OK if successful
- ESP_FAIL on error

esp_err_t **esp_spiffs_info**(const char *partition_label, size_t *total_bytes, size_t *used_bytes)

Get information for SPIFFS

Parameters

- **partition_label** –Same label as passed to esp_vfs_spiffs_register
- **total_bytes** –**[out]** Size of the file system
- **used_bytes** –**[out]** Current used bytes in the file system

Returns

- ESP_OK if success
- ESP_ERR_INVALID_STATE if not mounted

esp_err_t **esp_spiffs_check**(const char *partition_label)

Check integrity of SPIFFS

Parameters **partition_label** –Same label as passed to esp_vfs_spiffs_register

Returns

- ESP_OK if successful
- ESP_ERR_INVALID_STATE if not mounted
- ESP_FAIL on error

Structures

struct **esp_vfs_spiffs_conf_t**

Configuration structure for esp_vfs_spiffs_register.

Public Members

const char ***base_path**

File path prefix associated with the filesystem.

const char ***partition_label**

Optional, label of SPIFFS partition to use. If set to NULL, first partition with subtype=spiffs will be used.

size_t **max_files**

Maximum files that could be open at the same time.

bool **format_if_mount_failed**

If true, it will format the file system if it fails to mount.

2.6.8 Virtual filesystem component

Overview

Virtual filesystem (VFS) component provides a unified interface for drivers which can perform operations on file-like objects. These can be real filesystems (FAT, SPIFFS, etc.) or device drivers which provide a file-like interface.

This component allows C library functions, such as fopen and fprintf, to work with FS drivers. At a high level, each FS driver is associated with some path prefix. When one of C library functions needs to open a file, the VFS component searches for the FS driver associated with the file path and forwards the call to that driver. VFS also forwards read, write, and other calls for the given file to the same FS driver.

For example, one can register a FAT filesystem driver with the `/fat` prefix and call `fopen("/fat/file.txt", "w")`. The VFS component will then call the function `open` of the FAT driver and pass the argument `/file.txt` to it together with appropriate mode flags. All subsequent calls to C library functions for the returned `FILE*` stream will also be forwarded to the FAT driver.

FS registration

To register an FS driver, an application needs to define an instance of the *esp_vfs_t* structure and populate it with function pointers to FS APIs:

```
esp_vfs_t myfs = {
    .flags = ESP_VFS_FLAG_DEFAULT,
    .write = &myfs_write,
    .open = &myfs_open,
    .fstat = &myfs_fstat,
    .close = &myfs_close,
    .read = &myfs_read,
};

ESP_ERROR_CHECK(esp_vfs_register("/data", &myfs, NULL));
```

Depending on the way how the FS driver declares its API functions, either `read`, `write`, etc., or `read_p`, `write_p`, etc., should be used.

Case 1: API functions are declared without an extra context pointer (the FS driver is a singleton):

```
ssize_t myfs_write(int fd, const void * data, size_t size);

// In definition of esp_vfs_t:
    .flags = ESP_VFS_FLAG_DEFAULT,
    .write = &myfs_write,
// ... other members initialized

// When registering FS, context pointer (third argument) is NULL:
ESP_ERROR_CHECK(esp_vfs_register("/data", &myfs, NULL));
```

Case 2: API functions are declared with an extra context pointer (the FS driver supports multiple instances):

```
ssize_t myfs_write(myfs_t* fs, int fd, const void * data, size_t size);

// In definition of esp_vfs_t:
    .flags = ESP_VFS_FLAG_CONTEXT_PTR,
    .write_p = &myfs_write,
// ... other members initialized

// When registering FS, pass the FS context pointer into the third argument
// (hypothetical myfs_mount function is used for illustrative purposes)
myfs_t* myfs_inst1 = myfs_mount(partition1->offset, partition1->size);
ESP_ERROR_CHECK(esp_vfs_register("/data1", &myfs, myfs_inst1));

// Can register another instance:
myfs_t* myfs_inst2 = myfs_mount(partition2->offset, partition2->size);
ESP_ERROR_CHECK(esp_vfs_register("/data2", &myfs, myfs_inst2));
```

Synchronous input/output multiplexing Synchronous input/output multiplexing by `select()` is supported in the VFS component. The implementation works in the following way.

1. `select()` is called with file descriptors which could belong to various VFS drivers.
2. The file descriptors are divided into groups each belonging to one VFS driver.

3. The file descriptors belonging to non-socket VFS drivers are handed over to the given VFS drivers by `start_select()` described later on this page. This function represents the driver-specific implementation of `select()` for the given driver. This should be a non-blocking call which means the function should immediately return after setting up the environment for checking events related to the given file descriptors.
4. The file descriptors belonging to the socket VFS driver are handed over to the socket driver by `socket_select()` described later on this page. This is a blocking call which means that it will return only if there is an event related to socket file descriptors or a non-socket driver signals `socket_select()` to exit.
5. Results are collected from each VFS driver and all drivers are stopped by deinitiazation of the environment for checking events.
6. The `select()` call ends and returns the appropriate results.

Non-socket VFS drivers If you want to use `select()` with a file descriptor belonging to a non-socket VFS driver then you need to register the driver with functions `start_select()` and `end_select()` similarly to the following example:

```
// In definition of esp_vfs_t:
    .start_select = &uart_start_select,
    .end_select = &uart_end_select,
// ... other members initialized
```

`start_select()` is called for setting up the environment for detection of read/write/error conditions on file descriptors belonging to the given VFS driver.

`end_select()` is called to stop/deinitialize/free the environment which was setup by `start_select()`.

Note: `end_select()` might be called without a previous `start_select()` call in some rare circumstances. `end_select()` should fail gracefully if this is the case.

Please refer to the reference implementation for the UART peripheral in vfs/vfs_uart.c and most particularly to the functions *`esp_vfs_dev_uart_register()`*, `uart_start_select()`, and `uart_end_select()` for more information.

Please check the following examples that demonstrate the use of `select()` with VFS file descriptors:

- peripherals/uart/uart_select
- system/select

Socket VFS drivers A socket VFS driver is using its own internal implementation of `select()` and non-socket VFS drivers notify it upon read/write/error conditions.

A socket VFS driver needs to be registered with the following functions defined:

```
// In definition of esp_vfs_t:
    .socket_select = &lwip_select,
    .get_socket_select_semaphore = &lwip_get_socket_select_semaphore,
    .stop_socket_select = &lwip_stop_socket_select,
    .stop_socket_select_isr = &lwip_stop_socket_select_isr,
// ... other members initialized
```

`socket_select()` is the internal implementation of `select()` for the socket driver. It works only with file descriptors belonging to the socket VFS.

`get_socket_select_semaphore()` returns the signalization object (semaphore) which will be used in non-socket drivers to stop the waiting in `socket_select()`.

`stop_socket_select()` call is used to stop the waiting in `socket_select()` by passing the object returned by `get_socket_select_semaphore()`.

`stop_socket_select_isr()` has the same functionality as `stop_socket_select()` but it can be used from ISR.

Please see lwip/port/esp32/vfs_lwip.c for a reference socket driver implementation using LWIP.

Note: If you use `select()` for socket file descriptors only then you can enable the `CONFIG_LWIP_USE_ONLY_LWIP_SELECT` option to reduce the code size and improve performance.

Note: Don't change the socket driver during an active `select()` call or you might experience some undefined behavior.

Paths

Each registered FS has a path prefix associated with it. This prefix can be considered as a "mount point" of this partition.

In case when mount points are nested, the mount point with the longest matching path prefix is used when opening the file. For instance, suppose that the following filesystems are registered in VFS:

- FS 1 on /data
- FS 2 on /data/static

Then:

- FS 1 will be used when opening a file called `/data/log.txt`
- FS 2 will be used when opening a file called `/data/static/index.html`
- Even if `/index.html"` does not exist in FS 2, FS 1 will *not* be searched for `/static/index.html`.

As a general rule, mount point names must start with the path separator (`/`) and must contain at least one character after path separator. However, an empty mount point name is also supported and might be used in cases when an application needs to provide a "fallback" filesystem or to override VFS functionality altogether. Such filesystem will be used if no prefix matches the path given.

VFS does not handle dots (`.`) in path names in any special way. VFS does not treat `..` as a reference to the parent directory. In the above example, using a path `/data/static/../log.txt` will not result in a call to FS 1 to open `/log.txt`. Specific FS drivers (such as FATFS) might handle dots in file names differently.

When opening files, the FS driver receives only relative paths to files. For example:

1. The `myfs` driver is registered with `/data` as a path prefix.
2. The application calls `fopen("/data/config.json", ...)`.
3. The VFS component calls `myfs_open("/config.json", ...)`.
4. The `myfs` driver opens the `/config.json` file.

VFS does not impose any limit on total file path length, but it does limit the FS path prefix to `ESP_VFS_PATH_MAX` characters. Individual FS drivers may have their own filename length limitations.

File descriptors

File descriptors are small positive integers from `0` to `FD_SETSIZE - 1`, where `FD_SETSIZE` is defined in newlib's `sys/types.h`. The largest file descriptors (configured by `CONFIG_LWIP_MAX_SOCKETS`) are reserved for sockets. The VFS component contains a lookup-table called `s_fd_table` for mapping global file descriptors to VFS driver indexes registered in the `s_vfs` array.

Standard IO streams (stdin, stdout, stderr)

If the menuconfig option `UART for console output` is not set to `None`, then `stdin`, `stdout`, and `stderr` are configured to read from, and write to, a UART. It is possible to use UART0 or UART1 for standard IO. By default, UART0 is used with 115200 baud rate; TX pin is GPIO1; RX pin is GPIO3. These parameters can be changed in menuconfig.

Writing to `stdout` or `stderr` will send characters to the UART transmit FIFO. Reading from `stdin` will retrieve characters from the UART receive FIFO.

By default, VFS uses simple functions for reading from and writing to UART. Writes busy-wait until all data is put into UART FIFO, and reads are non-blocking, returning only the data present in the FIFO. Due to this non-blocking read behavior, higher level C library calls, such as `fscanf("%d\n", &var);`, might not have desired results.

Applications which use the UART driver can instruct VFS to use the driver's interrupt driven, blocking read and write functions instead. This can be done using a call to the `esp_vfs_dev_uart_use_driver` function. It is also possible to revert to the basic non-blocking functions using a call to `esp_vfs_dev_uart_use_nonblocking`.

VFS also provides an optional newline conversion feature for input and output. Internally, most applications send and receive lines terminated by the LF ('\n') character. Different terminal programs may require different line termination, such as CR or CRLF. Applications can configure this separately for input and output either via menuconfig, or by calls to the functions `esp_vfs_dev_uart_port_set_rx_line_endings` and `esp_vfs_dev_uart_port_set_tx_line_endings`.

Standard streams and FreeRTOS tasks `FILE` objects for `stdin`, `stdout`, and `stderr` are shared between all FreeRTOS tasks, but the pointers to these objects are stored in per-task `struct _reent`.

The following code is transferred to `fprintf(__getreent()->_stderr, "42\n");` by the preprocessor:

```
fprintf(stderr, "42\n");
```

The `__getreent()` function returns a per-task pointer to `struct _reent` in newlib libc. This structure is allocated on the TCB of each task. When a task is initialized, `_stdin`, `_stdout`, and `_stderr` members of `struct _reent` are set to the values of `_stdin`, `_stdout`, and `_stderr` of `_GLOBAL_REENT` (i.e., the structure which is used before FreeRTOS is started).

Such a design has the following consequences:

- It is possible to set `stdin`, `stdout`, and `stderr` for any given task without affecting other tasks, e.g., by doing `stdin = fopen("/dev/uart/1", "r")`.
- Closing default `stdin`, `stdout`, or `stderr` using `fclose` will close the `FILE` stream object, which will affect all other tasks.
- To change the default `stdin`, `stdout`, `stderr` streams for new tasks, modify `_GLOBAL_REENT->_stdin` (`_stdout`, `_stderr`) before creating the task.

Event fds

`eventfd()` call is a powerful tool to notify a `select()` based loop of custom events. The `eventfd()` implementation in ESP-IDF is generally the same as described in `man(2) eventfd` except for:

- `esp_vfs_eventfd_register()` has to be called before calling `eventfd()`
- Options `EFD_CLOEXEC`, `EFD_NONBLOCK` and `EFD_SEMAPHORE` are not supported in flags.
- Option `EFD_SUPPORT_ISR` has been added in flags. This flag is required to read and the write the eventfd in an interrupt handler.

Note that creating an eventfd with `EFD_SUPPORT_ISR` will cause interrupts to be temporarily disabled when reading, writing the file and during the beginning and the ending of the `select()` when this file is set.

API Reference

Header File

- components/vfs/include/esp_vfs.h

Functions

ssize_t **esp_vfs_write**(struct _reent *r, int fd, const void *data, size_t size)

These functions are to be used in newlib syscall table. They will be called by newlib when it needs to use any of the syscalls.

off_t **esp_vfs_lseek**(struct _reent *r, int fd, off_t size, int mode)

ssize_t **esp_vfs_read**(struct _reent *r, int fd, void *dst, size_t size)

int **esp_vfs_open**(struct _reent *r, const char *path, int flags, int mode)

int **esp_vfs_close**(struct _reent *r, int fd)

int **esp_vfs_fstat**(struct _reent *r, int fd, struct stat *st)

int **esp_vfs_stat**(struct _reent *r, const char *path, struct stat *st)

int **esp_vfs_link**(struct _reent *r, const char *n1, const char *n2)

int **esp_vfs_unlink**(struct _reent *r, const char *path)

int **esp_vfs_rename**(struct _reent *r, const char *src, const char *dst)

int **esp_vfs_utime**(const char *path, const struct utimbuf *times)

esp_err_t **esp_vfs_register**(const char *base_path, const *esp_vfs_t* *vfs, void *ctx)

Register a virtual filesystem for given path prefix.

Parameters

- **base_path** –file path prefix associated with the filesystem. Must be a zero-terminated C string, may be empty. If not empty, must be up to ESP_VFS_PATH_MAX characters long, and at least 2 characters long. Name must start with a "/" and must not end with "/". For example, "/data" or "/dev/spi" are valid. These VFSes would then be called to handle file paths such as "/data/myfile.txt" or "/dev/spi/0". In the special case of an empty base_path, a "fallback" VFS is registered. Such VFS will handle paths which are not matched by any other registered VFS.
- **vfs** –Pointer to *esp_vfs_t*, a structure which maps syscalls to the filesystem driver functions. VFS component doesn't assume ownership of this pointer.
- **ctx** –If vfs->flags has ESP_VFS_FLAG_CONTEXT_PTR set, a pointer which should be passed to VFS functions. Otherwise, NULL.

Returns ESP_OK if successful, ESP_ERR_NO_MEM if too many VFSes are registered.

esp_err_t **esp_vfs_register_fd_range**(const *esp_vfs_t* *vfs, void *ctx, int min_fd, int max_fd)

Special case function for registering a VFS that uses a method other than open() to open new file descriptors from the interval <min_fd; max_fd).

This is a special-purpose function intended for registering LWIP sockets to VFS.

Parameters

- **vfs** –Pointer to *esp_vfs_t*. Meaning is the same as for esp_vfs_register().
- **ctx** –Pointer to context structure. Meaning is the same as for esp_vfs_register().
- **min_fd** –The smallest file descriptor this VFS will use.
- **max_fd** –Upper boundary for file descriptors this VFS will use (the biggest file descriptor plus one).

Returns ESP_OK if successful, ESP_ERR_NO_MEM if too many VFSes are registered, ESP_ERR_INVALID_ARG if the file descriptor boundaries are incorrect.

esp_err_t **esp_vfs_register_with_id**(const *esp_vfs_t* *vfs, void *ctx, *esp_vfs_id_t* *vfs_id)

Special case function for registering a VFS that uses a method other than open() to open new file descriptors. In comparison with esp_vfs_register_fd_range, this function doesn't pre-registers an interval of file descriptors. File descriptors can be registered later, by using esp_vfs_register_fd.

Parameters

- **vfs** –Pointer to *esp_vfs_t*. Meaning is the same as for esp_vfs_register().

- **ctx** –Pointer to context structure. Meaning is the same as for esp_vfs_register().
- **vfs_id** –Here will be written the VFS ID which can be passed to esp_vfs_register_fd for registering file descriptors.

Returns ESP_OK if successful, ESP_ERR_NO_MEM if too many VFSes are registered, ESP_ERR_INVALID_ARG if the file descriptor boundaries are incorrect.

esp_err_t **esp_vfs_unregister**(const char *base_path)

Unregister a virtual filesystem for given path prefix

Parameters **base_path** –file prefix previously used in esp_vfs_register call

Returns ESP_OK if successful, ESP_ERR_INVALID_STATE if VFS for given prefix hasn't been registered

esp_err_t **esp_vfs_unregister_with_id**(*esp_vfs_id_t* vfs_id)

Unregister a virtual filesystem with the given index

Parameters **vfs_id** –The VFS ID returned by esp_vfs_register_with_id

Returns ESP_OK if successful, ESP_ERR_INVALID_STATE if VFS for the given index hasn't been registered

esp_err_t **esp_vfs_register_fd**(*esp_vfs_id_t* vfs_id, int *fd)

Special function for registering another file descriptor for a VFS registered by esp_vfs_register_with_id.

Parameters

- **vfs_id** –VFS identificator returned by esp_vfs_register_with_id.
- **fd** –The registered file descriptor will be written to this address.

Returns ESP_OK if the registration is successful, ESP_ERR_NO_MEM if too many file descriptors are registered, ESP_ERR_INVALID_ARG if the arguments are incorrect.

esp_err_t **esp_vfs_register_fd_with_local_fd**(*esp_vfs_id_t* vfs_id, int local_fd, bool permanent, int *fd)

Special function for registering another file descriptor with given local_fd for a VFS registered by esp_vfs_register_with_id.

Parameters

- **vfs_id** –VFS identificator returned by esp_vfs_register_with_id.
- **local_fd** –The fd in the local vfs. Passing -1 will set the local fd as the (*fd) value.
- **permanent** –Whether the fd should be treated as permannet (not removed after close())
- **fd** –The registered file descriptor will be written to this address.

Returns ESP_OK if the registration is successful, ESP_ERR_NO_MEM if too many file descriptors are registered, ESP_ERR_INVALID_ARG if the arguments are incorrect.

esp_err_t **esp_vfs_unregister_fd**(*esp_vfs_id_t* vfs_id, int fd)

Special function for unregistering a file descriptor belonging to a VFS registered by esp_vfs_register_with_id.

Parameters

- **vfs_id** –VFS identificator returned by esp_vfs_register_with_id.
- **fd** –File descriptor which should be unregistered.

Returns ESP_OK if the registration is successful, ESP_ERR_INVALID_ARG if the arguments are incorrect.

int **esp_vfs_select**(int nfds, fd_set *readfds, fd_set *writefds, fd_set *errorfds, struct timeval *timeout)

Synchronous I/O multiplexing which implements the functionality of POSIX select() for VFS.

Parameters

- **nfds** –Specifies the range of descriptors which should be checked. The first nfds descriptors will be checked in each set.
- **readfds** –If not NULL, then points to a descriptor set that on input specifies which descriptors should be checked for being ready to read, and on output indicates which descriptors are ready to read.
- **writefds** –If not NULL, then points to a descriptor set that on input specifies which descriptors should be checked for being ready to write, and on output indicates which descriptors are ready to write.

- **errorfds** –If not NULL, then points to a descriptor set that on input specifies which descriptors should be checked for error conditions, and on output indicates which descriptors have error conditions.
- **timeout** –If not NULL, then points to timeval structure which specifies the time period after which the functions should time-out and return. If it is NULL, then the function will not time-out. Note that the timeout period is rounded up to the system tick and incremented by one.

Returns The number of descriptors set in the descriptor sets, or -1 when an error (specified by errno) have occurred.

void **esp_vfs_select_triggered**(*esp_vfs_select_sem_t* sem)

Notification from a VFS driver about a read/write/error condition.

This function is called when the VFS driver detects a read/write/error condition as it was requested by the previous call to start_select.

Parameters **sem** –semaphore structure which was passed to the driver by the start_select call

void **esp_vfs_select_triggered_isr**(*esp_vfs_select_sem_t* sem, BaseType_t *woken)

Notification from a VFS driver about a read/write/error condition (ISR version)

This function is called when the VFS driver detects a read/write/error condition as it was requested by the previous call to start_select.

Parameters

- **sem** –semaphore structure which was passed to the driver by the start_select call
- **woken** –is set to pdTRUE if the function wakes up a task with higher priority

ssize_t **esp_vfs_pread**(int fd, void *dst, size_t size, off_t offset)

Implements the VFS layer of POSIX pread()

Parameters

- **fd** –File descriptor used for read
- **dst** –Pointer to the buffer where the output will be written
- **size** –Number of bytes to be read
- **offset** –Starting offset of the read

Returns A positive return value indicates the number of bytes read. -1 is return on failure and errno is set accordingly.

ssize_t **esp_vfs_pwrite**(int fd, const void *src, size_t size, off_t offset)

Implements the VFS layer of POSIX pwrite()

Parameters

- **fd** –File descriptor used for write
- **src** –Pointer to the buffer from where the output will be read
- **size** –Number of bytes to write
- **offset** –Starting offset of the write

Returns A positive return value indicates the number of bytes written. -1 is return on failure and errno is set accordingly.

Structures

struct **esp_vfs_select_sem_t**

VFS semaphore type for select()

Public Members

bool **is_sem_local**

type of “sem” is SemaphoreHandle_t when true, defined by socket driver otherwise

void ***sem**

semaphore instance

struct **esp_vfs_t**

VFS definition structure.

This structure should be filled with pointers to corresponding FS driver functions.

VFS component will translate all FDs so that the filesystem implementation sees them starting at zero. The caller sees a global FD which is prefixed with an pre-filesystem-implementation.

Some FS implementations expect some state (e.g. pointer to some structure) to be passed in as a first argument. For these implementations, populate the members of this structure which have _p suffix, set flags member to ESP_VFS_FLAG_CONTEXT_PTR and provide the context pointer to esp_vfs_register function. If the implementation doesn't use this extra argument, populate the members without _p suffix and set flags member to ESP_VFS_FLAG_DEFAULT.

If the FS driver doesn't provide some of the functions, set corresponding members to NULL.

Public Members

int **flags**

ESP_VFS_FLAG_CONTEXT_PTR or ESP_VFS_FLAG_DEFAULT

ssize_t (***write_p**)(void *p, int fd, const void *data, size_t size)

Write with context pointer

ssize_t (***write**)(int fd, const void *data, size_t size)

Write without context pointer

off_t (***lseek_p**)(void *p, int fd, off_t size, int mode)

Seek with context pointer

off_t (***lseek**)(int fd, off_t size, int mode)

Seek without context pointer

ssize_t (***read_p**)(void *ctx, int fd, void *dst, size_t size)

Read with context pointer

ssize_t (***read**)(int fd, void *dst, size_t size)

Read without context pointer

ssize_t (***pread_p**)(void *ctx, int fd, void *dst, size_t size, off_t offset)

pread with context pointer

ssize_t (***pread**)(int fd, void *dst, size_t size, off_t offset)

pread without context pointer

ssize_t (***pwrite_p**)(void *ctx, int fd, const void *src, size_t size, off_t offset)

pwrite with context pointer

ssize_t (***pwrite**)(int fd, const void *src, size_t size, off_t offset)
pwrite without context pointer

int (***open_p**)(void *ctx, const char *path, int flags, int mode)
open with context pointer

int (***open**)(const char *path, int flags, int mode)
open without context pointer

int (***close_p**)(void *ctx, int fd)
close with context pointer

int (***close**)(int fd)
close without context pointer

int (***fstat_p**)(void *ctx, int fd, struct *stat* *st)
fstat with context pointer

int (***fstat**)(int fd, struct *stat* *st)
fstat without context pointer

int (***stat_p**)(void *ctx, const char *path, struct *stat* *st)
stat with context pointer

int (***stat**)(const char *path, struct *stat* *st)
stat without context pointer

int (***link_p**)(void *ctx, const char *n1, const char *n2)
link with context pointer

int (***link**)(const char *n1, const char *n2)
link without context pointer

int (***unlink_p**)(void *ctx, const char *path)
unlink with context pointer

int (***unlink**)(const char *path)
unlink without context pointer

int (***rename_p**)(void *ctx, const char *src, const char *dst)
rename with context pointer

int (***rename**)(const char *src, const char *dst)
rename without context pointer

DIR *(***opendir_p**)(void *ctx, const char *name)
opendir with context pointer

DIR *(***opendir**)(const char *name)

opendir without context pointer

struct dirent *(***readdir_p**)(void *ctx, DIR *pdir)

readdir with context pointer

struct dirent *(***readdir**)(DIR *pdir)

readdir without context pointer

int (***readdir_r_p**)(void *ctx, DIR *pdir, struct dirent *entry, struct dirent **out_dirent)

readdir_r with context pointer

int (***readdir_r**)(DIR *pdir, struct dirent *entry, struct dirent **out_dirent)

readdir_r without context pointer

long (***telldir_p**)(void *ctx, DIR *pdir)

telldir with context pointer

long (***telldir**)(DIR *pdir)

telldir without context pointer

void (***seekdir_p**)(void *ctx, DIR *pdir, long offset)

seekdir with context pointer

void (***seekdir**)(DIR *pdir, long offset)

seekdir without context pointer

int (***closedir_p**)(void *ctx, DIR *pdir)

closedir with context pointer

int (***closedir**)(DIR *pdir)

closedir without context pointer

int (***mkdir_p**)(void *ctx, const char *name, mode_t mode)

mkdir with context pointer

int (***mkdir**)(const char *name, mode_t mode)

mkdir without context pointer

int (***rmdir_p**)(void *ctx, const char *name)

rmdir with context pointer

int (***rmdir**)(const char *name)

rmdir without context pointer

int (***fcntl_p**)(void *ctx, int fd, int cmd, int arg)

fcntl with context pointer

int (*`fcntl`)(int fd, int cmd, int arg)
fcntl without context pointer

int (*`ioctl_p`)(void *ctx, int fd, int cmd, va_list args)
ioctl with context pointer

int (*`ioctl`)(int fd, int cmd, va_list args)
ioctl without context pointer

int (*`fsync_p`)(void *ctx, int fd)
fsync with context pointer

int (*`fsync`)(int fd)
fsync without context pointer

int (*`access_p`)(void *ctx, const char *path, int amode)
access with context pointer

int (*`access`)(const char *path, int amode)
access without context pointer

int (*`truncate_p`)(void *ctx, const char *path, off_t length)
truncate with context pointer

int (*`truncate`)(const char *path, off_t length)
truncate without context pointer

int (*`ftruncate_p`)(void *ctx, int fd, off_t length)
ftruncate with context pointer

int (*`ftruncate`)(int fd, off_t length)
ftruncate without context pointer

int (*`utime_p`)(void *ctx, const char *path, const struct utimbuf *times)
utime with context pointer

int (*`utime`)(const char *path, const struct utimbuf *times)
utime without context pointer

int (*`tcsetattr_p`)(void *ctx, int fd, int optional_actions, const struct termios *p)
tcsetattr with context pointer

int (*`tcsetattr`)(int fd, int optional_actions, const struct termios *p)
tcsetattr without context pointer

int (*`tcgetattr_p`)(void *ctx, int fd, struct termios *p)
tcgetattr with context pointer

int (*__tcgetattr__)(int fd, struct termios *p)

tcgetattr without context pointer

int (*__tcdrain_p__)(void *ctx, int fd)

tcdrain with context pointer

int (*__tcdrain__)(int fd)

tcdrain without context pointer

int (*__tcflush_p__)(void *ctx, int fd, int select)

tcflush with context pointer

int (*__tcflush__)(int fd, int select)

tcflush without context pointer

int (*__tcflow_p__)(void *ctx, int fd, int action)

tcflow with context pointer

int (*__tcflow__)(int fd, int action)

tcflow without context pointer

pid_t (*__tcgetsid_p__)(void *ctx, int fd)

tcgetsid with context pointer

pid_t (*__tcgetsid__)(int fd)

tcgetsid without context pointer

int (*__tcsendbreak_p__)(void *ctx, int fd, int duration)

tcsendbreak with context pointer

int (*__tcsendbreak__)(int fd, int duration)

tcsendbreak without context pointer

esp_err_t (*__start_select__)(int nfds, fd_set *readfds, fd_set *writefds, fd_set *exceptfds, *esp_vfs_select_sem_t* sem, void **end_select_args)

start_select is called for setting up synchronous I/O multiplexing of the desired file descriptors in the given VFS

int (*__socket_select__)(int nfds, fd_set *readfds, fd_set *writefds, fd_set *errorfds, struct timeval *timeout)

socket select function for socket FDs with the functionality of POSIX select(); this should be set only for the socket VFS

void (*__stop_socket_select__)(void *sem)

called by VFS to interrupt the socket_select call when select is activated from a non-socket VFS driver; set only for the socket driver

void (*__stop_socket_select_isr__)(void *sem, BaseType_t *woken)

stop_socket_select which can be called from ISR; set only for the socket driver

void *(***get_socket_select_semaphore**)(void)

end_select is called to stop the I/O multiplexing and deinitialize the environment created by start_select for the given VFS

esp_err_t (***end_select**)(void *end_select_args)

get_socket_select_semaphore returns semaphore allocated in the socket driver; set only for the socket driver

Macros

MAX_FDS

Maximum number of (global) file descriptors.

ESP_VFS_PATH_MAX

Maximum length of path prefix (not including zero terminator)

ESP_VFS_FLAG_DEFAULT

Default value of flags member in *esp_vfs_t* structure.

ESP_VFS_FLAG_CONTEXT_PTR

Flag which indicates that FS needs extra context pointer in syscalls.

Type Definitions

typedef int **esp_vfs_id_t**

Header File

- components/vfs/include/esp_vfs_dev.h

Functions

void **esp_vfs_dev_uart_register**(void)

add /dev/uart virtual filesystem driver

This function is called from startup code to enable serial output

void **esp_vfs_dev_uart_set_rx_line_endings**(esp_line_endings_t mode)

Set the line endings expected to be received on UART.

This specifies the conversion between line endings received on UART and newlines (‘ ’ , LF) passed into stdin:

- ESP_LINE_ENDINGS_CRLF: convert CRLF to LF
- ESP_LINE_ENDINGS_CR: convert CR to LF
- ESP_LINE_ENDINGS_LF: no modification

Note: this function is not thread safe w.r.t. reading from UART

Parameters **mode** – line endings expected on UART

void **esp_vfs_dev_uart_set_tx_line_endings**(esp_line_endings_t mode)

Set the line endings to sent to UART.

This specifies the conversion between newlines (‘

’ , LF) on stdout and line endings sent over UART:

- ESP_LINE_ENDINGS_CRLF: convert LF to CRLF
- ESP_LINE_ENDINGS_CR: convert LF to CR
- ESP_LINE_ENDINGS_LF: no modification

Note: this function is not thread safe w.r.t. writing to UART

Parameters **mode** –line endings to send to UART

int **esp_vfs_dev_uart_port_set_rx_line_endings**(int uart_num, esp_line_endings_t mode)

Set the line endings expected to be received on specified UART.

This specifies the conversion between line endings received on UART and newlines (‘

’ , LF) passed into stdin:

- ESP_LINE_ENDINGS_CRLF: convert CRLF to LF
- ESP_LINE_ENDINGS_CR: convert CR to LF
- ESP_LINE_ENDINGS_LF: no modification

Note: this function is not thread safe w.r.t. reading from UART

Parameters

- **uart_num** –the UART number
- **mode** –line endings to send to UART

Returns 0 if successed, or -1 when an error (specified by errno) have occurred.

int **esp_vfs_dev_uart_port_set_tx_line_endings**(int uart_num, esp_line_endings_t mode)

Set the line endings to sent to specified UART.

This specifies the conversion between newlines (‘

’ , LF) on stdout and line endings sent over UART:

- ESP_LINE_ENDINGS_CRLF: convert LF to CRLF
- ESP_LINE_ENDINGS_CR: convert LF to CR
- ESP_LINE_ENDINGS_LF: no modification

Note: this function is not thread safe w.r.t. writing to UART

Parameters

- **uart_num** –the UART number

- **mode** –line endings to send to UART

Returns 0 if successed, or -1 when an error (specified by errno) have occurred.

void **esp_vfs_dev_uart_use_nonblocking**(int uart_num)

set VFS to use simple functions for reading and writing UART Read is non-blocking, write is busy waiting until TX FIFO has enough space. These functions are used by default.

Parameters **uart_num** –UART peripheral number

void **esp_vfs_dev_uart_use_driver**(int uart_num)

set VFS to use UART driver for reading and writing

Note: application must configure UART driver before calling these functions With these functions, read and write are blocking and interrupt-driven.

Parameters **uart_num** –UART peripheral number

void **esp_vfs_usb_serial_jtag_use_driver**(void)

set VFS to use USB-SERIAL-JTAG driver for reading and writing

---

Note: application must configure USB-SERIAL-JTAG driver before calling these functions With these functions, read and write are blocking and interrupt-driven.

---

void **esp_vfs_usb_serial_jtag_use_nonblocking**(void)

set VFS to use simple functions for reading and writing UART Read is non-blocking, write is busy waiting until TX FIFO has enough space. These functions are used by default.

Header File

- components/vfs/include/esp_vfs_eventfd.h

Functions

esp_err_t **esp_vfs_eventfd_register**(const *esp_vfs_eventfd_config_t* *config)

Registers the event vfs.

Returns ESP_OK if successful, ESP_ERR_NO_MEM if too many VFSes are registered.

esp_err_t **esp_vfs_eventfd_unregister**(void)

Unregisters the event vfs.

Returns ESP_OK if successful, ESP_ERR_INVALID_STATE if VFS for given prefix hasn't been registered

int **eventfd**(unsigned int initval, int flags)

Structures

struct **esp_vfs_eventfd_config_t**

Eventfd vfs initialization settings.

Public Members

size_t **max_fds**

The maxinum number of eventfds supported

Macros

EFD_SUPPORT_ISR

ESP_VFS_EVENTD_CONFIG_DEFAULT()

2.6.9 Wear Levelling API

Overview

Most of flash memory and especially SPI flash that is used in ESP32 has a sector-based organization and also has a limited number of erase/modification cycles per memory sector. The wear levelling component helps to distribute wear and tear among sectors more evenly without requiring any attention from the user.

The wear levelling component provides API functions related to reading, writing, erasing, and memory mapping of data in external SPI flash through the partition component. The component also has higher-level API functions which work with the FAT filesystem defined in *FAT filesystem*.

The wear levelling component, together with the FAT FS component, uses FAT FS sectors of 4096 bytes, which is a standard size for flash memory. With this size, the component shows the best performance but needs additional memory in RAM.

To save internal memory, the component has two additional modes which both use sectors of 512 bytes:

- **Performance mode.** Erase sector operation data is stored in RAM, the sector is erased, and then data is copied back to flash memory. However, if a device is powered off for any reason, all 4096 bytes of data is lost.
- **Safety mode.** The data is first saved to flash memory, and after the sector is erased, the data is saved back. If a device is powered off, the data can be recovered as soon as the device boots up.

The default settings are as follows: - Sector size is 512 bytes - Performance mode

You can change the settings through the configuration menu.

The wear levelling component does not cache data in RAM. The write and erase functions modify flash directly, and flash contents are consistent when the function returns.

Wear Levelling access API functions

This is the set of API functions for working with data in flash:

- `wl_mount` - initializes the wear levelling module and mounts the specified partition
- `wl_unmount` - unmounts the partition and deinitializes the wear levelling module
- `wl_erase_range` - erases a range of addresses in flash
- `wl_write` - writes data to a partition
- `wl_read` - reads data from a partition
- `wl_size` - returns the size of available memory in bytes
- `wl_sector_size` - returns the size of one sector

As a rule, try to avoid using raw wear levelling functions and use filesystem-specific functions instead.

Memory Size

The memory size is calculated in the wear levelling module based on partition parameters. The module uses some sectors of flash for internal data.

See also

- *FAT Filesystem*
- *Partition Table documentation*

Application Example

An example which combines the wear levelling driver with the FATFS library is provided in the storage/wear_levelling directory. This example initializes the wear levelling driver, mounts FATFS partition, as well as writes and reads data from it using POSIX and C library APIs. See the storage/wear_levelling/README.md file for more information.

High level API Reference

Header Files

- fatfs/vfs/esp_vfs_fat.h

Functions

esp_err_t **esp_vfs_fat_spiflash_mount**(const char *base_path, const char *partition_label, const *esp_vfs_fat_mount_config_t* *mount_config, *wl_handle_t* *wl_handle)

Convenience function to initialize FAT filesystem in SPI flash and register it in VFS.

This is an all-in-one function which does the following:

- finds the partition with defined partition_label. Partition label should be configured in the partition table.
- initializes flash wear levelling library on top of the given partition
- mounts FAT partition using FATFS library on top of flash wear levelling library
- registers FATFS library with VFS, with prefix given by base_prefix variable

This function is intended to make example code more compact.

Parameters

- **base_path** –path where FATFS partition should be mounted (e.g. "/spiflash")
- **partition_label** –label of the partition which should be used
- **mount_config** –pointer to structure with extra parameters for mounting FATFS
- **wl_handle** –**[out]** wear levelling driver handle

Returns

- ESP_OK on success
- ESP_ERR_NOT_FOUND if the partition table does not contain FATFS partition with given label
- ESP_ERR_INVALID_STATE if esp_vfs_fat_spiflash_mount was already called
- ESP_ERR_NO_MEM if memory can not be allocated
- ESP_FAIL if partition can not be mounted
- other error codes from wear levelling library, SPI flash driver, or FATFS drivers

struct **esp_vfs_fat_mount_config_t**

Configuration arguments for esp_vfs_fat_sdmmc_mount and esp_vfs_fat_spiflash_mount functions.

Public Members

bool **format_if_mount_failed**

If FAT partition can not be mounted, and this parameter is true, create partition table and format the filesystem.

int **max_files**

Max number of open files.

size_t **allocation_unit_size**

If format_if_mount_failed is set, and mount fails, format the card with given allocation unit size. Must be a power of 2, between sector size and 128 * sector size. For SD cards, sector size is always 512 bytes. For wear_levelling, sector size is determined by CONFIG_WL_SECTOR_SIZE option.

Using larger allocation unit size will result in higher read/write performance and higher overhead when storing small files.

Setting this field to 0 will result in allocation unit set to the sector size.

esp_err_t **esp_vfs_fat_spiflash_unmount**(const char *base_path, *wl_handle_t* wl_handle)

Unmount FAT filesystem and release resources acquired using esp_vfs_fat_spiflash_mount.

Parameters

- **base_path** –path where partition should be registered (e.g. "/spiflash")
- **wl_handle** –wear levelling driver handle returned by esp_vfs_fat_spiflash_mount

Returns

- ESP_OK on success
- ESP_ERR_INVALID_STATE if esp_vfs_fat_spiflash_mount hasn't been called

Mid level API Reference

Header File

- components/wear_levelling/include/wear_levelling.h

Functions

esp_err_t **wl_mount**(const *esp_partition_t* *partition, *wl_handle_t* *out_handle)

Mount WL for defined partition.

Parameters

- **partition** –that will be used for access
- **out_handle** –handle of the WL instance

Returns

- ESP_OK, if the allocation was successfully;
- ESP_ERR_INVALID_ARG, if WL allocation was unsuccessful;
- ESP_ERR_NO_MEM, if there was no memory to allocate WL components;

esp_err_t **wl_unmount**(*wl_handle_t* handle)

Unmount WL for defined partition.

Parameters **handle** –WL partition handle

Returns

- ESP_OK, if the operation completed successfully;
- or one of error codes from lower-level flash driver.

esp_err_t **wl_erase_range**(*wl_handle_t* handle, size_t start_addr, size_t size)

Erase part of the WL storage.

Parameters

- **handle** –WL handle that are related to the partition
- **start_addr** –Address where erase operation should start. Must be aligned to the result of function wl_sector_size(···).
- **size** –Size of the range which should be erased, in bytes. Must be divisible by result of function wl_sector_size(···)..

Returns

- ESP_OK, if the range was erased successfully;

- ESP_ERR_INVALID_ARG, if iterator or dst are NULL;
- ESP_ERR_INVALID_SIZE, if erase would go out of bounds of the partition;
- or one of error codes from lower-level flash driver.

esp_err_t **wl_write**(*wl_handle_t* handle, size_t dest_addr, const void *src, size_t size)

Write data to the WL storage.

Before writing data to flash, corresponding region of flash needs to be erased. This can be done using wl_erase_range function.

Note: Prior to writing to WL storage, make sure it has been erased with wl_erase_range call.

Parameters
- **handle** –WL handle that are related to the partition
- **dest_addr** –Address where the data should be written, relative to the beginning of the partition.
- **src** –Pointer to the source buffer. Pointer must be non-NULL and buffer must be at least 'size' bytes long.
- **size** –Size of data to be written, in bytes.

Returns
- ESP_OK, if data was written successfully;
- ESP_ERR_INVALID_ARG, if dst_offset exceeds partition size;
- ESP_ERR_INVALID_SIZE, if write would go out of bounds of the partition;
- or one of error codes from lower-level flash driver.

esp_err_t **wl_read**(*wl_handle_t* handle, size_t src_addr, void *dest, size_t size)

Read data from the WL storage.

Parameters
- **handle** –WL module instance that was initialized before
- **dest** –Pointer to the buffer where data should be stored. Pointer must be non-NULL and buffer must be at least 'size' bytes long.
- **src_addr** –Address of the data to be read, relative to the beginning of the partition.
- **size** –Size of data to be read, in bytes.

Returns
- ESP_OK, if data was read successfully;
- ESP_ERR_INVALID_ARG, if src_offset exceeds partition size;
- ESP_ERR_INVALID_SIZE, if read would go out of bounds of the partition;
- or one of error codes from lower-level flash driver.

size_t **wl_size**(*wl_handle_t* handle)

Get size of the WL storage.

Parameters **handle** –WL module handle that was initialized before
Returns usable size, in bytes

size_t **wl_sector_size**(*wl_handle_t* handle)

Get sector size of the WL instance.

Parameters **handle** –WL module handle that was initialized before
Returns sector size, in bytes

Macros

WL_INVALID_HANDLE

Type Definitions

typedef int32_t **wl_handle_t**

wear levelling handle

Code examples for this API section are provided in the storage directory of ESP-IDF examples.

2.7 System API

2.7.1 App Image Format

An application image consists of the following structures:

1. The *esp_image_header_t* structure describes the mode of SPI flash and the count of memory segments.
2. The *esp_image_segment_header_t* structure describes each segment, its length, and its location in ESP32's memory, followed by the data with a length of `data_len`. The data offset for each segment in the image is calculated in the following way:

- offset for 0 Segment = sizeof(*esp_image_header_t*) + sizeof(*esp_image_segment_header_t*).
- offset for 1 Segment = offset for 0 Segment + length of 0 Segment + sizeof(*esp_image_segment_header_t*).
- offset for 2 Segment = offset for 1 Segment + length of 1 Segment + sizeof(*esp_image_segment_header_t*).
- ...

The count of each segment is defined in the `segment_count` field that is stored in *esp_image_header_t*. The count cannot be more than `ESP_IMAGE_MAX_SEGMENTS`.

To get the list of your image segments, please run the following command:

```
esptool.py --chip esp32 image_info build/app.bin
```

```
esptool.py v2.3.1
Image version: 1
Entry point: 40080ea4
13 segments
Segment 1: len 0x13ce0 load 0x3f400020 file_offs 0x00000018 SOC_DROM
Segment 2: len 0x00000 load 0x3ff80000 file_offs 0x00013d00 SOC_RTC_DRAM
Segment 3: len 0x00000 load 0x3ff80000 file_offs 0x00013d08 SOC_RTC_DRAM
Segment 4: len 0x028e0 load 0x3ffb0000 file_offs 0x00013d10 DRAM
Segment 5: len 0x00000 load 0x3ffb28e0 file_offs 0x000165f8 DRAM
Segment 6: len 0x00400 load 0x40080000 file_offs 0x00016600 SOC_IRAM
Segment 7: len 0x09600 load 0x40080400 file_offs 0x00016a08 SOC_IRAM
Segment 8: len 0x62e4c load 0x400d0018 file_offs 0x00020010 SOC_IROM
Segment 9: len 0x06cec load 0x40089a00 file_offs 0x00082e64 SOC_IROM
Segment 10: len 0x00000 load 0x400c0000 file_offs 0x00089b58 SOC_RTC_IRAM
Segment 11: len 0x00004 load 0x50000000 file_offs 0x00089b60 SOC_RTC_DATA
Segment 12: len 0x00000 load 0x50000004 file_offs 0x00089b6c SOC_RTC_DATA
Segment 13: len 0x00000 load 0x50000004 file_offs 0x00089b74 SOC_RTC_DATA
Checksum: e8 (valid)Validation Hash:␣
↪407089ca0eae2bbf83b4120979d3354b1c938a49cb7a0c997f240474ef2ec76b (valid)
```

You can also see the information on segments in the IDF logs while your application is booting:

```
I (443) esp_image: segment 0: paddr=0x00020020 vaddr=0x3f400020 size=0x13ce0 (␣
↪81120) map
I (489) esp_image: segment 1: paddr=0x00033d08 vaddr=0x3ff80000 size=0x00000 ( 0)␣
↪load
I (530) esp_image: segment 2: paddr=0x00033d10 vaddr=0x3ff80000 size=0x00000 ( 0)␣
↪load
I (571) esp_image: segment 3: paddr=0x00033d18 vaddr=0x3ffb0000 size=0x028e0 (␣
↪10464) load
```

(continues on next page)

(continued from previous page)

```
I (612) esp_image: segment 4: paddr=0x00036600 vaddr=0x3ffb28e0 size=0x00000 ( 0)␣
↪load
I (654) esp_image: segment 5: paddr=0x00036608 vaddr=0x40080000 size=0x00400 (␣
↪1024) load
I (695) esp_image: segment 6: paddr=0x00036a10 vaddr=0x40080400 size=0x09600 (␣
↪38400) load
I (737) esp_image: segment 7: paddr=0x00040018 vaddr=0x400d0018 size=0x62e4c␣
↪(405068) map
I (847) esp_image: segment 8: paddr=0x000a2e6c vaddr=0x40089a00 size=0x06cec (␣
↪27884) load
I (888) esp_image: segment 9: paddr=0x000a9b60 vaddr=0x400c0000 size=0x00000 ( 0)␣
↪load
I (929) esp_image: segment 10: paddr=0x000a9b68 vaddr=0x50000000 size=0x00004 ( 4)␣
↪load
I (971) esp_image: segment 11: paddr=0x000a9b74 vaddr=0x50000004 size=0x00000 ( 0)␣
↪load
I (1012) esp_image: segment 12: paddr=0x000a9b7c vaddr=0x50000004 size=0x00000 (␣
↪0) load
```

For more details on the type of memory segments and their address ranges, see *ESP32 Technical Reference Manual* > *System and Memory* > *Embedded Memory* [PDF].

3. The image has a single checksum byte after the last segment. This byte is written on a sixteen byte padded boundary, so the application image might need padding.
4. If the `hash_appended` field from *`esp_image_header_t`* is set then a SHA256 checksum will be appended. The value of SHA256 is calculated on the range from first byte and up to this field. The length of this field is 32 bytes.
5. If the options *CONFIG_SECURE_SIGNED_APPS_SCHEME* is set to ECDSA then the application image will have additional 68 bytes for an ECDSA signature, which includes:

- version word (4 bytes),
- signature data (64 bytes).

Application Description

The `DROM` segment starts with the *`esp_app_desc_t`* structure which carries specific fields describing the application:

- `secure_version` - see *Anti-rollback*.
- `version` - see *App version*. *
- `project_name` is filled from `PROJECT_NAME`. *
- `time` and `date` - compile time and date.
- `idf_ver` - version of ESP-IDF. *
- `app_elf_sha256` - contains sha256 for the elf application file.

`*` - The maximum length is 32 characters, including null-termination character. For example, if the length of `PROJECT_NAME` exceeds 32 characters, the excess characters will be disregarded.

This structure is useful for identification of images uploaded OTA because it has a fixed offset = sizeof(*`esp_image_header_t`*) + sizeof(*`esp_image_segment_header_t`*). As soon as a device receives the first fragment containing this structure, it has all the information to determine whether the update should be continued or not.

Adding a Custom Structure to an Application

Customer also has the opportunity to have similar structure with a fixed offset relative to the beginning of the image. The following pattern can be used to add a custom structure to your image:

```
const __attribute__((section(".rodata_custom_desc"))) esp_custom_app_desc_t custom_
↪app_desc = { ... }
```

Offset for custom structure is sizeof(*esp_image_header_t*) + sizeof(*esp_image_segment_header_t*) + sizeof(*esp_app_desc_t*).

To guarantee that the custom structure is located in the image even if it is not used, you need to add:

- For Make: add `COMPONENT_ADD_LDFLAGS += -u custom_app_desc` into `component.mk`
- For Cmake: add `target_link_libraries(${COMPONENT_TARGET} "-u custom_app_desc")` into `CMakeLists.txt`

API Reference

Header File

- components/bootloader_support/include/esp_app_format.h

Structures

struct **esp_image_header_t**

Main header of binary image.

Public Members

uint8_t **magic**

Magic word ESP_IMAGE_HEADER_MAGIC

uint8_t **segment_count**

Count of memory segments

uint8_t **spi_mode**

flash read mode (esp_image_spi_mode_t as uint8_t)

uint8_t **spi_speed**

flash frequency (esp_image_spi_freq_t as uint8_t)

uint8_t **spi_size**

flash chip size (esp_image_flash_size_t as uint8_t)

uint32_t **entry_addr**

Entry address

uint8_t **wp_pin**

WP pin when SPI pins set via efuse (read by ROM bootloader, the IDF bootloader uses software to configure the WP pin and sets this field to 0xEE=disabled)

uint8_t **spi_pin_drv**[3]

Drive settings for the SPI flash pins (read by ROM bootloader)

esp_chip_id_t **chip_id**

Chip identification number

uint8_t **min_chip_rev**

Minimum chip revision supported by image

uint8_t **reserved**[8]

Reserved bytes in additional header space, currently unused

uint8_t **hash_appended**

If 1, a SHA256 digest "simple hash" (of the entire image) is appended after the checksum. Included in image length. This digest is separate to secure boot and only used for detecting corruption. For secure boot signed images, the signature is appended after this (and the simple hash is included in the signed data).

struct **esp_image_segment_header_t**

Header of binary image segment.

Public Members

uint32_t **load_addr**

Address of segment

uint32_t **data_len**

Length of data

struct **esp_app_desc_t**

Description about application.

Public Members

uint32_t **magic_word**

Magic word ESP_APP_DESC_MAGIC_WORD

uint32_t **secure_version**

Secure version

uint32_t **reserv1**[2]

reserv1

char **version**[32]

Application version

char **project_name**[32]

Project name

char **time**[16]

Compile time

char **date**[16]
Compile date

char **idf_ver**[32]
Version IDF

uint8_t **app_elf_sha256**[32]
sha256 of elf file

uint32_t **reserv2**[20]
reserv2

Macros

ESP_IMAGE_HEADER_MAGIC
The magic word for the *esp_image_header_t* structure.

ESP_IMAGE_MAX_SEGMENTS
Max count of segments in the image.

ESP_APP_DESC_MAGIC_WORD
The magic word for the esp_app_desc structure that is in DROM.

Enumerations

enum **esp_chip_id_t**
ESP chip ID.

Values:

enumerator **ESP_CHIP_ID_ESP32**
chip ID: ESP32

enumerator **ESP_CHIP_ID_ESP32S2**
chip ID: ESP32-S2

enumerator **ESP_CHIP_ID_ESP32C3**
chip ID: ESP32-C3

enumerator **ESP_CHIP_ID_ESP32S3**
chip ID: ESP32-S3

enumerator **ESP_CHIP_ID_ESP32H2**
chip ID: ESP32-H2

enumerator **ESP_CHIP_ID_INVALID**
Invalid chip ID (we defined it to make sure the esp_chip_id_t is 2 bytes size)

enum **esp_image_spi_mode_t**
SPI flash mode, used in *esp_image_header_t*.

Values:

enumerator **ESP_IMAGE_SPI_MODE_QIO**

SPI mode QIO

enumerator **ESP_IMAGE_SPI_MODE_QOUT**

SPI mode QOUT

enumerator **ESP_IMAGE_SPI_MODE_DIO**

SPI mode DIO

enumerator **ESP_IMAGE_SPI_MODE_DOUT**

SPI mode DOUT

enumerator **ESP_IMAGE_SPI_MODE_FAST_READ**

SPI mode FAST_READ

enumerator **ESP_IMAGE_SPI_MODE_SLOW_READ**

SPI mode SLOW_READ

enum **esp_image_spi_freq_t**

SPI flash clock frequency.

Values:

enumerator **ESP_IMAGE_SPI_SPEED_40M**

SPI clock frequency 40 MHz

enumerator **ESP_IMAGE_SPI_SPEED_26M**

SPI clock frequency 26 MHz

enumerator **ESP_IMAGE_SPI_SPEED_20M**

SPI clock frequency 20 MHz

enumerator **ESP_IMAGE_SPI_SPEED_80M**

SPI clock frequency 80 MHz

enum **esp_image_flash_size_t**

Supported SPI flash sizes.

Values:

enumerator **ESP_IMAGE_FLASH_SIZE_1MB**

SPI flash size 1 MB

enumerator **ESP_IMAGE_FLASH_SIZE_2MB**

SPI flash size 2 MB

enumerator **ESP_IMAGE_FLASH_SIZE_4MB**

SPI flash size 4 MB

enumerator **ESP_IMAGE_FLASH_SIZE_8MB**
SPI flash size 8 MB

enumerator **ESP_IMAGE_FLASH_SIZE_16MB**
SPI flash size 16 MB

enumerator **ESP_IMAGE_FLASH_SIZE_32MB**
SPI flash size 32 MB

enumerator **ESP_IMAGE_FLASH_SIZE_64MB**
SPI flash size 64 MB

enumerator **ESP_IMAGE_FLASH_SIZE_128MB**
SPI flash size 128 MB

enumerator **ESP_IMAGE_FLASH_SIZE_MAX**
SPI flash size MAX

2.7.2 Application Level Tracing

Overview

IDF provides useful feature for program behaviour analysis: application level tracing. It is implemented in the corresponding library and can be enabled via menuconfig. This feature allows to transfer arbitrary data between host and ESP32 via JTAG interface with small overhead on program execution. Developers can use this library to send application specific state of execution to the host and receive commands or other type of info in the opposite direction at runtime. The main use cases of this library are:

1. Collecting application specific data, see *Application Specific Tracing*
2. Lightweight logging to the host, see *Logging to Host*
3. System behaviour analysis, see *System Behavior Analysis with SEGGER SystemView*

API Reference

Header File

- components/app_trace/include/esp_app_trace.h

Functions

esp_err_t **esp_apptrace_init**(void)
Initializes application tracing module.

Note: Should be called before any esp_apptrace_xxx call.

Returns ESP_OK on success, otherwise see esp_err_t

void **esp_apptrace_down_buffer_config**(uint8_t *buf, uint32_t size)
Configures down buffer.

Note: Needs to be called before initiating any data transfer using esp_apptrace_buffer_get and esp_apptrace_write. This function does not protect internal data by lock.

Parameters
- **buf** –Address of buffer to use for down channel (host to target) data.
- **size** –Size of the buffer.

uint8_t ***esp_apptrace_buffer_get**(*esp_apptrace_dest_t* dest, uint32_t size, uint32_t tmo)

Allocates buffer for trace data. After data in buffer are ready to be sent off esp_apptrace_buffer_put must be called to indicate it.

Parameters
- **dest** –Indicates HW interface to send data.
- **size** –Size of data to write to trace buffer.
- **tmo** –Timeout for operation (in us). Use ESP_APPTRACE_TMO_INFINITE to wait indefinitely.

Returns non-NULL on success, otherwise NULL.

esp_err_t **esp_apptrace_buffer_put**(*esp_apptrace_dest_t* dest, uint8_t *ptr, uint32_t tmo)

Indicates that the data in buffer are ready to be sent off. This function is a counterpart of and must be preceeded by esp_apptrace_buffer_get.

Parameters
- **dest** –Indicates HW interface to send data. Should be identical to the same parameter in call to esp_apptrace_buffer_get.
- **ptr** –Address of trace buffer to release. Should be the value returned by call to esp_apptrace_buffer_get.
- **tmo** –Timeout for operation (in us). Use ESP_APPTRACE_TMO_INFINITE to wait indefinitely.

Returns ESP_OK on success, otherwise see esp_err_t

esp_err_t **esp_apptrace_write**(*esp_apptrace_dest_t* dest, const void *data, uint32_t size, uint32_t tmo)

Writes data to trace buffer.

Parameters
- **dest** –Indicates HW interface to send data.
- **data** –Address of data to write to trace buffer.
- **size** –Size of data to write to trace buffer.
- **tmo** –Timeout for operation (in us). Use ESP_APPTRACE_TMO_INFINITE to wait indefinitely.

Returns ESP_OK on success, otherwise see esp_err_t

int **esp_apptrace_vprintf_to**(*esp_apptrace_dest_t* dest, uint32_t tmo, const char *fmt, va_list ap)

vprintf-like function to sent log messages to host via specified HW interface.

Parameters
- **dest** –Indicates HW interface to send data.
- **tmo** –Timeout for operation (in us). Use ESP_APPTRACE_TMO_INFINITE to wait indefinitely.
- **fmt** –Address of format string.
- **ap** –List of arguments.

Returns Number of bytes written.

int **esp_apptrace_vprintf**(const char *fmt, va_list ap)

vprintf-like function to sent log messages to host.

Parameters
- **fmt** –Address of format string.
- **ap** –List of arguments.

Returns Number of bytes written.

esp_err_t **esp_apptrace_flush**(*esp_apptrace_dest_t* dest, uint32_t tmo)

Flushes remaining data in trace buffer to host.

Parameters

- **dest** –Indicates HW interface to flush data on.
- **tmo** –Timeout for operation (in us). Use ESP_APPTRACE_TMO_INFINITE to wait indefinitely.

Returns ESP_OK on success, otherwise see esp_err_t

esp_err_t **esp_apptrace_flush_nolock**(*esp_apptrace_dest_t* dest, uint32_t min_sz, uint32_t tmo)

Flushes remaining data in trace buffer to host without locking internal data. This is special version of esp_apptrace_flush which should be called from panic handler.

Parameters

- **dest** –Indicates HW interface to flush data on.
- **min_sz** –Threshold for flushing data. If current filling level is above this value, data will be flushed. TRAX destinations only.
- **tmo** –Timeout for operation (in us). Use ESP_APPTRACE_TMO_INFINITE to wait indefinitely.

Returns ESP_OK on success, otherwise see esp_err_t

esp_err_t **esp_apptrace_read**(*esp_apptrace_dest_t* dest, void *data, uint32_t *size, uint32_t tmo)

Reads host data from trace buffer.

Parameters

- **dest** –Indicates HW interface to read the data on.
- **data** –Address of buffer to put data from trace buffer.
- **size** –Pointer to store size of read data. Before call to this function pointed memory must hold requested size of data
- **tmo** –Timeout for operation (in us). Use ESP_APPTRACE_TMO_INFINITE to wait indefinitely.

Returns ESP_OK on success, otherwise see esp_err_t

uint8_t ***esp_apptrace_down_buffer_get**(*esp_apptrace_dest_t* dest, uint32_t *size, uint32_t tmo)

Retrieves incoming data buffer if any. After data in buffer are processed esp_apptrace_down_buffer_put must be called to indicate it.

Parameters

- **dest** –Indicates HW interface to receive data.
- **size** –Address to store size of available data in down buffer. Must be initialized with requested value.
- **tmo** –Timeout for operation (in us). Use ESP_APPTRACE_TMO_INFINITE to wait indefinitely.

Returns non-NULL on success, otherwise NULL.

esp_err_t **esp_apptrace_down_buffer_put**(*esp_apptrace_dest_t* dest, uint8_t *ptr, uint32_t tmo)

Indicates that the data in down buffer are processed. This function is a counterpart of and must be preceeded by esp_apptrace_down_buffer_get.

Parameters

- **dest** –Indicates HW interface to receive data. Should be identical to the same parameter in call to esp_apptrace_down_buffer_get.
- **ptr** –Address of trace buffer to release. Should be the value returned by call to esp_apptrace_down_buffer_get.
- **tmo** –Timeout for operation (in us). Use ESP_APPTRACE_TMO_INFINITE to wait indefinitely.

Returns ESP_OK on success, otherwise see esp_err_t

bool **esp_apptrace_host_is_connected**(*esp_apptrace_dest_t* dest)

Checks whether host is connected.

Parameters **dest** –Indicates HW interface to use.
Returns true if host is connected, otherwise false

void ***esp_apptrace_fopen**(*esp_apptrace_dest_t* dest, const char *path, const char *mode)

Opens file on host. This function has the same semantic as ‘fopen’ except for the first argument.

Parameters
- **dest** –Indicates HW interface to use.
- **path** –Path to file.
- **mode** –Mode string. See fopen for details.

Returns non zero file handle on success, otherwise 0

int **esp_apptrace_fclose**(*esp_apptrace_dest_t* dest, void *stream)

Closes file on host. This function has the same semantic as 'fclose' except for the first argument.

Parameters
- **dest** –Indicates HW interface to use.
- **stream** –File handle returned by esp_apptrace_fopen.

Returns Zero on success, otherwise non-zero. See fclose for details.

size_t **esp_apptrace_fwrite**(*esp_apptrace_dest_t* dest, const void *ptr, size_t size, size_t nmemb, void *stream)

Writes to file on host. This function has the same semantic as 'fwrite' except for the first argument.

Parameters
- **dest** –Indicates HW interface to use.
- **ptr** –Address of data to write.
- **size** –Size of an item.
- **nmemb** –Number of items to write.
- **stream** –File handle returned by esp_apptrace_fopen.

Returns Number of written items. See fwrite for details.

size_t **esp_apptrace_fread**(*esp_apptrace_dest_t* dest, void *ptr, size_t size, size_t nmemb, void *stream)

Read file on host. This function has the same semantic as 'fread' except for the first argument.

Parameters
- **dest** –Indicates HW interface to use.
- **ptr** –Address to store read data.
- **size** –Size of an item.
- **nmemb** –Number of items to read.
- **stream** –File handle returned by esp_apptrace_fopen.

Returns Number of read items. See fread for details.

int **esp_apptrace_fseek**(*esp_apptrace_dest_t* dest, void *stream, long offset, int whence)

Set position indicator in file on host. This function has the same semantic as 'fseek' except for the first argument.

Parameters
- **dest** –Indicates HW interface to use.
- **stream** –File handle returned by esp_apptrace_fopen.
- **offset** –Offset. See fseek for details.
- **whence** –Position in file. See fseek for details.

Returns Zero on success, otherwise non-zero. See fseek for details.

int **esp_apptrace_ftell**(*esp_apptrace_dest_t* dest, void *stream)

Get current position indicator for file on host. This function has the same semantic as 'ftell' except for the first argument.

Parameters
- **dest** –Indicates HW interface to use.
- **stream** –File handle returned by esp_apptrace_fopen.

Returns Current position in file. See ftell for details.

int **esp_apptrace_fstop**(*esp_apptrace_dest_t* dest)

Indicates to the host that all file operations are completed. This function should be called after all file operations are finished and indicate to the host that it can perform cleanup operations (close open files etc.).

Parameters **dest** –Indicates HW interface to use.

Returns ESP_OK on success, otherwise see esp_err_t

void **esp_gcov_dump**(void)

Triggers gcov info dump. This function waits for the host to connect to target before dumping data.

Enumerations

enum **esp_apptrace_dest_t**

Application trace data destinations bits.

Values:

enumerator **ESP_APPTRACE_DEST_JTAG**

JTAG destination.

enumerator **ESP_APPTRACE_DEST_TRAX**

xxx_TRAX name is obsolete, use more common xxx_JTAG

enumerator **ESP_APPTRACE_DEST_UART0**

UART0 destination.

enumerator **ESP_APPTRACE_DEST_MAX**

enumerator **ESP_APPTRACE_DEST_NUM**

Header File

- components/app_trace/include/esp_sysview_trace.h

Functions

static inline *esp_err_t* **esp_sysview_flush**(uint32_t tmo)

Flushes remaining data in SystemView trace buffer to host.

Parameters **tmo** –Timeout for operation (in us). Use ESP_APPTRACE_TMO_INFINITE to wait indefinetly.

Returns ESP_OK.

int **esp_sysview_vprintf**(const char *format, va_list args)

vprintf-like function to sent log messages to the host.

Parameters

- **format** –Address of format string.
- **args** –List of arguments.

Returns Number of bytes written.

esp_err_t **esp_sysview_heap_trace_start**(uint32_t tmo)

Starts SystemView heap tracing.

Parameters **tmo** –Timeout (in us) to wait for the host to be connected. Use -1 to wait forever.

Returns ESP_OK on success, ESP_ERR_TIMEOUT if operation has been timed out.

esp_err_t **esp_sysview_heap_trace_stop**(void)

Stops SystemView heap tracing.

Returns ESP_OK.

void **esp_sysview_heap_trace_alloc**(void *addr, uint32_t size, const void *callers)

Sends heap allocation event to the host.

Parameters

- **addr** –Address of allocated block.
- **size** –Size of allocated block.
- **callers** –Pointer to array with callstack addresses. Array size must be CONFIG_HEAP_TRACING_STACK_DEPTH.

void **esp_sysview_heap_trace_free**(void *addr, const void *callers)

Sends heap de-allocation event to the host.

Parameters

- **addr** –Address of de-allocated block.
- **callers** –Pointer to array with callstack addresses. Array size must be CONFIG_HEAP_TRACING_STACK_DEPTH.

2.7.3 Console

ESP-IDF provides `console` component, which includes building blocks needed to develop an interactive console over serial port. This component includes following facilities:

- Line editing, provided by linenoise library. This includes handling of backspace and arrow keys, scrolling through command history, command auto-completion, and argument hints.
- Splitting of command line into arguments.
- Argument parsing, provided by argtable3 library. This library includes APIs used for parsing GNU style command line arguments.
- Functions for registration and dispatching of commands.
- Functions to establish a basic REPL (Read-Evaluate-Print-Loop) environment.

Note: These facilities can be used together or independently. For example, it is possible to use line editing and command registration features, but use `getopt` or custom code for argument parsing, instead of argtable3. Likewise, it is possible to use simpler means of command input (such as `fgets`) together with the rest of the means for command splitting and argument parsing.

Line editing

Line editing feature lets users compose commands by typing them, erasing symbols using 'backspace' key, navigating within the command using left/right keys, navigating to previously typed commands using up/down keys, and performing autocompletion using 'tab' key.

Note: This feature relies on ANSI escape sequence support in the terminal application. As such, serial monitors which display raw UART data can not be used together with the line editing library. If you see `[6n` or similar escape sequence when running system/console example instead of a command prompt (e.g. `esp>`), it means that the serial monitor does not support escape sequences. Programs which are known to work are GNU screen, minicom, and idf_monitor.py (which can be invoked using `idf.py monitor` from project directory).

Here is an overview of functions provided by linenoise library.

Configuration Linenoise library does not need explicit initialization. However, some configuration defaults may need to be changed before invoking the main line editing function.

linenoiseClearScreen() Clear terminal screen using an escape sequence and position the cursor at the top left corner.

linenoiseSetMultiLine() Switch between single line and multi line editing modes. In single line mode, if the length of the command exceeds the width of the terminal, the command text is scrolled within the line to show the end of the text. In this case the beginning of the text is hidden. Single line needs less data to be sent to refresh screen on each key press, so exhibits less glitching compared to the multi line mode. On the flip side, editing commands and copying command text from terminal in single line mode is harder. Default is single line mode.

linenoiseAllowEmpty() Set whether linenoise library will return a zero-length string (if `true`) or `NULL` (if `false`) for empty lines. By default, zero-length strings are returned.

linenoiseSetMaxLineLen() Set maximum length of the line for linenoise library. Default length is 4096. If you need optimize RAM memory usage, you can do it by this function by setting a value less than default 4kB.

Main loop

linenoise() In most cases, console applications have some form of read/eval loop. `linenoise()` is the single function which handles user's key presses and returns completed line once 'enter' key is pressed. As such, it handles the 'read' part of the loop.

linenoiseFree() This function must be called to release the command line buffer obtained from `linenoise()` function.

Hints and completions

linenoiseSetCompletionCallback() When user presses 'tab' key, linenoise library invokes completion callback. The callback should inspect the contents of the command typed so far and provide a list of possible completions using calls to `linenoiseAddCompletion()` function. `linenoiseSetCompletionCallback()` function should be called to register this completion callback, if completion feature is desired. `console` component provides a ready made function to provide completions for registered commands, *esp_console_get_completion()* (see below).

linenoiseAddCompletion() Function to be called by completion callback to inform the library about possible completions of the currently typed command.

linenoiseSetHintsCallback() Whenever user input changes, linenoise invokes hints callback. This callback can inspect the command line typed so far, and provide a string with hints (which can include list of command arguments, for example). The library then displays the hint text on the same line where editing happens, possibly with a different color.

linenoiseSetFreeHintsCallback() If hint string returned by hints callback is dynamically allocated or needs to be otherwise recycled, the function which performs such cleanup should be registered via `linenoiseSetFreeHintsCallback()`.

History

linenoiseHistorySetMaxLen() This function sets the number of most recently typed commands to be kept in memory. Users can navigate the history using up/down arrows.

linenoiseHistoryAdd() Linenoise does not automatically add commands to history. Instead, applications need to call this function to add command strings to the history.

linenoiseHistorySave() Function saves command history from RAM to a text file, for example on an SD card or on a filesystem in flash memory.

linenoiseHistoryLoad() Counterpart to `linenoiseHistorySave()`, loads history from a file.

linenoiseHistoryFree() Releases memory used to store command history. Call this function when done working with linenoise library.

Splitting of command line into arguments

`console` component provides *esp_console_split_argv()* function to split command line string into arguments. The function returns the number of arguments found (`argc`) and fills an array of pointers which can be passed as `argv` argument to any function which accepts arguments in `argc, argv` format.

The command line is split into arguments according to the following rules:

- Arguments are separated by spaces
- If spaces within arguments are required, they can be escaped using \ (backslash) character.
- Other escape sequences which are recognized are \\ (which produces literal backslash) and \", which produces a double quote.
- Arguments can be quoted using double quotes. Quotes may appear only in the beginning and at the end of the argument. Quotes within the argument must be escaped as mentioned above. Quotes surrounding the argument are stripped by `esp_console_split_argv` function.

Examples:

- `abc def 1 20 .3` → [`abc`, `def`, `1`, `20`, `.3`]
- `abc "123 456" def` → [`abc`, `123 456`, `def`]
- `` `a\ b\\c\" `` → [`a b\c"`]

Argument parsing

For argument parsing, `console` component includes argtable3 library. Please see tutorial for an introduction to argtable3. Github repository also includes examples.

Command registration and dispatching

`console` component includes utility functions which handle registration of commands, matching commands typed by the user to registered ones, and calling these commands with the arguments given on the command line.

Application first initializes command registration module using a call to *`esp_console_init()`*, and calls *`esp_console_cmd_register()`* function to register command handlers.

For each command, application provides the following information (in the form of `esp_console_cmd_t` structure):

- Command name (string without spaces)
- Help text explaining what the command does
- Optional hint text listing the arguments of the command. If application uses Argtable3 for argument parsing, hint text can be generated automatically by providing a pointer to argtable argument definitions structure instead.
- The command handler function.

A few other functions are provided by the command registration module:

`esp_console_run()` This function takes the command line string, splits it into argc/argv argument list using *`esp_console_split_argv()`*, looks up the command in the list of registered components, and if it is found, executes its handler.

`esp_console_register_help_command()` Adds `help` command to the list of registered commands. This command prints the list of all the registered commands, along with their arguments and help texts.

`esp_console_get_completion()` Callback function to be used with `linenoiseSetCompletionCallback()` from linenoise library. Provides completions to linenoise based on the list of registered commands.

`esp_console_get_hint()` Callback function to be used with `linenoiseSetHintsCallback()` from linenoise library. Provides argument hints for registered commands to linenoise.

Initialize console REPL environment

To establish a basic REPL environment, `console` component provides several useful APIs, combining those functions described above.

In a typical application, you only need to call *`esp_console_new_repl_uart()`* to initialize the REPL environment based on UART device, including driver install, basic console configuration, spawning a thread to do REPL task and register several useful commands (e.g. *help*).

After that, you can register your own commands with *esp_console_cmd_register()*. The REPL environment keeps in init state until you call *esp_console_start_repl()*.

Application Example

Example application illustrating usage of the `console` component is available in system/console directory. This example shows how to initialize UART and VFS functions, set up linenoise library, read and handle commands from UART, and store command history in Flash. See README.md in the example directory for more details.

Besides that, ESP-IDF contains several useful examples which based on *console* component and can be treated as "tools" when developing applications. For example, peripherals/i2c/i2c_tools, wifi/iperf.

API Reference

Header File

- components/console/esp_console.h

Functions

esp_err_t **esp_console_init** (const *esp_console_config_t* *config)

initialize console module

Note: Call this once before using other console module features

Parameters **config** –console configuration

Returns

- ESP_OK on success
- ESP_ERR_NO_MEM if out of memory
- ESP_ERR_INVALID_STATE if already initialized
- ESP_ERR_INVALID_ARG if the configuration is invalid

esp_err_t **esp_console_deinit** (void)

de-initialize console module

Note: Call this once when done using console module functions

Returns

- ESP_OK on success
- ESP_ERR_INVALID_STATE if not initialized yet

esp_err_t **esp_console_cmd_register** (const *esp_console_cmd_t* *cmd)

Register console command.

Parameters **cmd** –pointer to the command description; can point to a temporary value

Returns

- ESP_OK on success
- ESP_ERR_NO_MEM if out of memory
- ESP_ERR_INVALID_ARG if command description includes invalid arguments

esp_err_t **esp_console_run** (const char *cmdline, int *cmd_ret)

Run command line.

Parameters

- **cmdline** –command line (command name followed by a number of arguments)
- **cmd_ret** –**[out]** return code from the command (set if command was run)

Returns

- ESP_OK, if command was run
- ESP_ERR_INVALID_ARG, if the command line is empty, or only contained whitespace
- ESP_ERR_NOT_FOUND, if command with given name wasn't registered
- ESP_ERR_INVALID_STATE, if esp_console_init wasn't called

size_t **esp_console_split_argv**(char *line, char **argv, size_t argv_size)

Split command line into arguments in place.

```
* - This function finds whitespace-separated arguments in the given input line.
*
*     'abc def 1 20 .3' -> [ 'abc', 'def', '1', '20', '.3' ]
*
* - Argument which include spaces may be surrounded with quotes. In this case
*   spaces are preserved and quotes are stripped.
*
*     'abc "123 456" def' -> [ 'abc', '123 456', 'def' ]
*
* - Escape sequences may be used to produce backslash, double quote, and space:
*
*     'a\ b\\c\"' -> [ 'a b\c"' ]
*
```

Note: Pointers to at most argv_size - 1 arguments are returned in argv array. The pointer after the last one (i.e. argv[argc]) is set to NULL.

Parameters

- **line** –pointer to buffer to parse; it is modified in place
- **argv** –array where the pointers to arguments are written
- **argv_size** –number of elements in argv_array (max. number of arguments)

Returns number of arguments found (argc)

void **esp_console_get_completion**(const char *buf, *linenoiseCompletions* *lc)

Callback which provides command completion for linenoise library.

When using linenoise for line editing, command completion support can be enabled like this:

linenoiseSetCompletionCallback(&esp_console_get_completion);

Parameters

- **buf** –the string typed by the user
- **lc** –linenoiseCompletions to be filled in

const char ***esp_console_get_hint**(const char *buf, int *color, int *bold)

Callback which provides command hints for linenoise library.

When using linenoise for line editing, hints support can be enabled as follows:

linenoiseSetHintsCallback((linenoiseHintsCallback*) &esp_console_get_hint);

The extra cast is needed because linenoiseHintsCallback is defined as returning a char* instead of const char*.

Parameters

- **buf** –line typed by the user
- **color** –**[out]** ANSI color code to be used when displaying the hint
- **bold** –**[out]** set to 1 if hint has to be displayed in bold

Returns string containing the hint text. This string is persistent and should not be freed (i.e. linenoiseSetFreeHintsCallback should not be used).

esp_err_t **esp_console_register_help_command**(void)

Register a ‘help’ command.

Default ‘help’ command prints the list of registered commands along with hints and help strings.

Returns
- ESP_OK on success
- ESP_ERR_INVALID_STATE, if esp_console_init wasn’t called

esp_err_t **esp_console_new_repl_uart**(const *esp_console_dev_uart_config_t* *dev_config, const *esp_console_repl_config_t* *repl_config, *esp_console_repl_t* **ret_repl)

Establish a console REPL environment over UART driver.

Attention This function is meant to be used in the examples to make the code more compact. Applications which use console functionality should be based on the underlying linenoise and esp_console functions.

Note: This is a all-in-one function to establish the environment needed for REPL, includes:

- Install the UART driver on the console UART (8n1, 115200, REF_TICK clock source)
- Configures the stdin/stdout to go through the UART driver
- Initializes linenoise
- Spawn new thread to run REPL in the background

Parameters
- **dev_config** –**[in]** UART device configuration
- **repl_config** –**[in]** REPL configuration
- **ret_repl** –**[out]** return REPL handle after initialization succeed, return NULL otherwise

Returns
- ESP_OK on success
- ESP_FAIL Parameter error

esp_err_t **esp_console_new_repl_usb_cdc**(const *esp_console_dev_usb_cdc_config_t* *dev_config, const *esp_console_repl_config_t* *repl_config, *esp_console_repl_t* **ret_repl)

Establish a console REPL environment over USB CDC.

Attention This function is meant to be used in the examples to make the code more compact. Applications which use console functionality should be based on the underlying linenoise and esp_console functions.

Note: This is a all-in-one function to establish the environment needed for REPL, includes:

- Initializes linenoise
- Spawn new thread to run REPL in the background

Parameters
- **dev_config** –**[in]** USB CDC configuration
- **repl_config** –**[in]** REPL configuration
- **ret_repl** –**[out]** return REPL handle after initialization succeed, return NULL otherwise

Returns
- ESP_OK on success
- ESP_FAIL Parameter error

esp_err_t **esp_console_start_repl**(*esp_console_repl_t* *repl)

Start REPL environment.

Note: Once the REPL got started, it won't be stopped until user call repl->del(repl) to destory the REPL environment.

Parameters **repl** –**[in]** REPL handle returned from esp_console_new_repl_xxx

Returns

- ESP_OK on success
- ESP_ERR_INVALID_STATE, if repl has started already

Structures

struct **esp_console_config_t**

Parameters for console initialization.

Public Members

size_t **max_cmdline_length**

length of command line buffer, in bytes

size_t **max_cmdline_args**

maximum number of command line arguments to parse

int **hint_color**

ASCII color code of hint text.

int **hint_bold**

Set to 1 to print hint text in bold.

struct **esp_console_repl_config_t**

Parameters for console REPL (Read Eval Print Loop)

Public Members

uint32_t **max_history_len**

maximum length for the history

const char ***history_save_path**

file path used to save history commands, set to NULL won't save to file system

uint32_t **task_stack_size**

repl task stack size

uint32_t **task_priority**

repl task priority

const char ***prompt**

prompt (NULL represents default: "esp> ")

size_t **max_cmdline_length**

maximum length of a command line. If 0, default value will be used

struct **esp_console_dev_uart_config_t**

Parameters for console device: UART.

Public Members

int **channel**

UART channel number (count from zero)

int **baud_rate**

Comunication baud rate.

int **tx_gpio_num**

GPIO number for TX path, -1 means using default one.

int **rx_gpio_num**

GPIO number for RX path, -1 means using default one.

struct **esp_console_dev_usb_cdc_config_t**

Parameters for console device: USB CDC.

Note: It's an empty structure for now, reserved for future

struct **esp_console_cmd_t**

Console command description.

Public Members

const char ***command**

Command name. Must not be NULL, must not contain spaces. The pointer must be valid until the call to esp_console_deinit.

const char ***help**

Help text for the command, shown by help command. If set, the pointer must be valid until the call to esp_console_deinit. If not set, the command will not be listed in 'help' output.

const char ***hint**

Hint text, usually lists possible arguments. If set to NULL, and 'argtable' field is non-NULL, hint will be generated automatically

esp_console_cmd_func_t **func**

Pointer to a function which implements the command.

void ***argtable**

Array or structure of pointers to arg_xxx structures, may be NULL. Used to generate hint text if 'hint' is set to NULL. Array/structure which this field points to must end with an arg_end. Only used for the duration of esp_console_cmd_register call.

struct **esp_console_repl_s**

Console REPL base structure.

Public Members

esp_err_t (***del**)(*esp_console_repl_t* *repl)

Delete console REPL environment.

Param repl **[in]** REPL handle returned from esp_console_new_repl_xxx
Return
- ESP_OK on success
- ESP_FAIL on errors

Macros

ESP_CONSOLE_CONFIG_DEFAULT()

Default console configuration value.

ESP_CONSOLE_REPL_CONFIG_DEFAULT()

Default console repl configuration value.

ESP_CONSOLE_DEV_UART_CONFIG_DEFAULT()

ESP_CONSOLE_DEV_CDC_CONFIG_DEFAULT()

Type Definitions

typedef struct *linenoiseCompletions* **linenoiseCompletions**

typedef int (***esp_console_cmd_func_t**)(int argc, char **argv)

Console command main function.

Param argc number of arguments
Param argv array with argc entries, each pointing to a zero-terminated string argument
Return console command return code, 0 indicates "success"

typedef struct *esp_console_repl_s* **esp_console_repl_t**

Type defined for console REPL.

2.7.4 eFuse Manager

Introduction

The eFuse Manager library is designed to structure access to eFuse bits and make using these easy. This library operates eFuse bits by a structure name which is assigned in eFuse table. This sections introduces some concepts used by eFuse Manager.

Hardware description

The ESP32 has a number of eFuses which can store system and user parameters. Each eFuse is a one-bit field which can be programmed to 1 after which it cannot be reverted back to 0. Some of system parameters are using these eFuse bits directly by hardware modules and have special place (for example EFUSE_BLK0).

For more details, see *ESP32 Technical Reference Manual* > *eFuse Controller (eFuse)* [PDF]. Some eFuse bits are available for user applications.

ESP32 has 4 eFuse blocks each of the size of 256 bits (not all bits are available):

- EFUSE_BLK0 is used entirely for system purposes;
- EFUSE_BLK1 is used for flash encrypt key. If not using that Flash Encryption feature, they can be used for another purpose;
- EFUSE_BLK2 is used for security boot key. If not using that Secure Boot feature, they can be used for another purpose;
- EFUSE_BLK3 can be partially reserved for the custom MAC address, or used entirely for user application. Note that some bits are already used in IDF.

Each block is divided into 8 32-bits registers.

eFuse Manager component

The component has API functions for reading and writing fields. Access to the fields is carried out through the structures that describe the location of the eFuse bits in the blocks. The component provides the ability to form fields of any length and from any number of individual bits. The description of the fields is made in a CSV file in a table form. To generate from a tabular form (CSV file) in the C-source uses the tool *efuse_table_gen.py*. The tool checks the CSV file for uniqueness of field names and bit intersection, in case of using a *custom* file from the user's project directory, the utility will check with the *common* CSV file.

CSV files:

- common (*esp_efuse_table.csv*) - contains eFuse fields which are used inside the IDF. C-source generation should be done manually when changing this file (run command `idf.py efuse-common-table`). Note that changes in this file can lead to incorrect operation.
- custom - (optional and can be enabled by *CONFIG_EFUSE_CUSTOM_TABLE*) contains eFuse fields that are used by the user in their application. C-source generation should be done manually when changing this file and running `idf.py efuse-custom-table`.

Description CSV file

The CSV file contains a description of the eFuse fields. In the simple case, one field has one line of description. Table header:

```
# field_name,  efuse_block(EFUSE_BLK0..EFUSE_BLK3), bit_start(0..255),    bit_
↪count(1..256),         comment
```

Individual params in CSV file the following meanings:

field_name Name of field. The prefix *ESP_EFUSE_* will be added to the name, and this field name will be available in the code. This name will be used to access the fields. The name must be unique for all fields. If the line has an empty name, then this line is combined with the previous field. This allows you to set an arbitrary order of bits in the field, and expand the field as well (see `MAC_FACTORY` field in the common table). The field_name supports structured format using . to show that the field belongs to another field (see `WR_DIS` and `RD_DIS` in the common table).

efuse_block Block number. It determines where the eFuse bits will be placed for this field. Available EFUSE_BLK0..EFUSE_BLK3.

bit_start Start bit number (0..255). The bit_start field can be omitted. In this case, it will be set to bit_start + bit_count from the previous record, if it has the same efuse_block. Otherwise (if efuse_block is different, or this is the first entry), an error will be generated.

bit_count The number of bits to use in this field (1..-). This parameter can not be omitted. This field also may be `MAX_BLK_LEN` in this case, the field length will have the maximum block length, taking into account the coding scheme (applicable for `ESP_EFUSE_SECURE_BOOT_KEY` and `ESP_EFUSE_ENCRYPT_FLASH_KEY` fields). The value `MAX_BLK_LEN` depends on *CONFIG_EFUSE_CODE_SCHEME_SELECTOR*, will be replaced with "None" - 256, "3/4" - 192, "REPEAT" - 128.

comment This param is using for comment field, it also move to C-header file. The comment field can be omitted.

If a non-sequential bit order is required to describe a field, then the field description in the following lines should be continued without specifying a name, this will indicate that it belongs to one field. For example two fields MAC_FACTORY and MAC_FACTORY_CRC:

```
# Factory MAC address #
#######################
MAC_FACTORY,            EFUSE_BLK0,     72,     8,    Factory MAC addr [0]
,                       EFUSE_BLK0,     64,     8,    Factory MAC addr [1]
,                       EFUSE_BLK0,     56,     8,    Factory MAC addr [2]
,                       EFUSE_BLK0,     48,     8,    Factory MAC addr [3]
,                       EFUSE_BLK0,     40,     8,    Factory MAC addr [4]
,                       EFUSE_BLK0,     32,     8,    Factory MAC addr [5]
MAC_FACTORY_CRC,        EFUSE_BLK0,     80,     8,    CRC8 for factory MAC address
```

This field will available in code as ESP_EFUSE_MAC_FACTORY and ESP_EFUSE_MAC_FACTORY_CRC.

Structured efuse fields

```
WR_DIS,                             EFUSE_BLK0,    0,     32,      Write protection
WR_DIS.RD_DIS,                      EFUSE_BLK0,    0,     1,       Write protection for␣
↪RD_DIS
WR_DIS.FIELD_1,                     EFUSE_BLK0,    1,     1,       Write protection for␣
↪FIELD_1
WR_DIS.FIELD_2,                     EFUSE_BLK0,    2,     4,       Write protection for␣
↪FIELD_2 (includes B1 and B2)
WR_DIS.FIELD_2.B1,                  EFUSE_BLK0,    2,     2,       Write protection for␣
↪FIELD_2.B1
WR_DIS.FIELD_2.B2,                  EFUSE_BLK0,    4,     2,       Write protection for␣
↪FIELD_2.B2
WR_DIS.FIELD_3,                     EFUSE_BLK0,    5,     1,       Write protection for␣
↪FIELD_3
WR_DIS.FIELD_3.ALIAS,               EFUSE_BLK0,    5,     1,       Write protection for␣
↪FIELD_3 (just a alias for WR_DIS.FIELD_3)
WR_DIS.FIELD_4,                     EFUSE_BLK0,    7,     1,       Write protection for␣
↪FIELD_4
```

The structured eFuse field looks like `WR_DIS.RD_DIS` where the dot points that this field belongs to the parent field - `WR_DIS` and can not be out of the parent's range.

It is possible to use some levels of structured fields as WR_DIS.FIELD_2.B1 and B2. These fields should not be crossed each other and should be in the range of two fields: `WR_DIS` and `WR_DIS.FIELD_2`.

It is possible to create aliases for fields with the same range, see `WR_DIS.FIELD_3` and `WR_DIS.FIELD_3.ALIAS`.

The IDF names for structured efuse fields should be unique. The `efuse_table_gen` tool will generate the final names where the dot will be replaced by _. The names for using in IDF are ESP_EFUSE_WR_DIS, ESP_EFUSE_WR_DIS_RD_DIS, ESP_EFUSE_WR_DIS_FIELD_2_B1, etc.

efuse_table_gen.py tool

The tool is designed to generate C-source files from CSV file and validate fields. First of all, the check is carried out on the uniqueness of the names and overlaps of the field bits. If an additional *custom* file is used, it will be checked with the existing *common* file (esp_efuse_table.csv). In case of errors, a message will be displayed and the string that caused the error. C-source files contain structures of type *esp_efuse_desc_t*.

To generate a *common* files, use the following command `idf.py efuse-common-table` or:

```
cd $IDF_PATH/components/efuse/
./efuse_table_gen.py esp32/esp_efuse_table.csv
```

After generation in the folder $IDF_PATH/components/efuse/*esp32* create:

- *esp_efuse_table.c* file.
- In *include* folder *esp_efuse_table.c* file.

To generate a *custom* files, use the following command `idf.py efuse-custom-table` or:

```
cd $IDF_PATH/components/efuse/
./efuse_table_gen.py esp32/esp_efuse_table.csv PROJECT_PATH/main/esp_efuse_custom_
↪table.csv
```

After generation in the folder PROJECT_PATH/main create:

- *esp_efuse_custom_table.c* file.
- In *include* folder *esp_efuse_custom_table.c* file.

To use the generated fields, you need to include two files:

```
#include "esp_efuse.h"
#include "esp_efuse_table.h" or "esp_efuse_custom_table.h"
```

Supported coding scheme

eFuse have three coding schemes:

- `None` (value 0).
- `3/4` (value 1).
- `Repeat` (value 2).

The coding scheme affects only EFUSE_BLK1, EFUSE_BLK2 and EFUSE_BLK3 blocks. EUSE_BLK0 block always has a coding scheme `None`. Coding changes the number of bits that can be written into a block, the block length is constant 256, some of these bits are used for encoding and not avaliable for the user.

When using a coding scheme, the length of the payload that can be written is limited (for more details `20.3.1.3 System Parameter coding_scheme`):

- None 256 bits.
- 3/4 192 bits.
- Repeat 128 bits.

You can find out the coding scheme of your chip:

- run a `espefuse.py -p PORT summary` command.
- from `esptool` utility logs (during flashing).
- calling the function in the code *`esp_efuse_get_coding_scheme()`* for the EFUSE_BLK3 block.

eFuse tables must always comply with the coding scheme in the chip. There is an *CONFIG_EFUSE_CODE_SCHEME_SELECTOR* option to select the coding type for tables in a Kconfig. When generating source files, if your tables do not follow the coding scheme, an error message will be displayed. Adjust the length or offset fields. If your program was compiled with `None` encoding and `3/4` is used in the chip, then the `ESP_ERR_CODING` error may occur when calling the eFuse API (the field is outside the block boundaries). If the field matches the new block boundaries, then the API will work without errors.

Also, 3/4 coding scheme imposes restrictions on writing bits belonging to one coding unit. The whole block with a length of 256 bits is divided into 4 coding units, and in each coding unit there are 6 bytes of useful data and 2 service bytes. These 2 service bytes contain the checksum of the previous 6 data bytes.

It turns out that only one field can be written into one coding unit. Repeated rewriting in one coding unit is prohibited. But if the record was made in advance or through a *esp_efuse_write_block()* function, then reading the fields belonging to one coding unit is possible.

In case `3/4` coding scheme, the writing process is divided into the coding units and we can not use the usual mode of writing some fields. We can prepare all the data for writing and burn it in one time. You can also use this mode for `None` coding scheme but it is not necessary. It is important for `3/4` coding scheme. `The batch writing mode` blocks `esp_efuse_read_...` operations.

After changing the coding scheme, run `efuse_common_table` and `efuse_custom_table` commands to check the tables of the new coding scheme.

To write some fields into one block, or different blocks in one time, you need to use `the batch writing mode`. Firstly set this mode through *esp_efuse_batch_write_begin()* function then write some fields as usual using the `esp_efuse_write_...` functions. At the end to burn them, call the *esp_efuse_batch_write_commit()* function. It burns prepared data to the eFuse blocks and disables the `batch recording mode`.

eFuse API

Access to the fields is via a pointer to the description structure. API functions have some basic operation:

- *esp_efuse_read_field_blob()* - returns an array of read eFuse bits.
- *esp_efuse_read_field_cnt()* - returns the number of bits programmed as "1".
- *esp_efuse_write_field_blob()* - writes an array.
- *esp_efuse_write_field_cnt()* - writes a required count of bits as "1".
- *esp_efuse_get_field_size()* - returns the number of bits by the field name.
- *esp_efuse_read_reg()* - returns value of eFuse register.
- *esp_efuse_write_reg()* - writes value to eFuse register.
- *esp_efuse_get_coding_scheme()* - returns eFuse coding scheme for blocks.
- *esp_efuse_read_block()* - reads key to eFuse block starting at the offset and the required size.
- *esp_efuse_write_block()* - writes key to eFuse block starting at the offset and the required size.
- *esp_efuse_batch_write_begin()* - set the batch mode of writing fields.
- *esp_efuse_batch_write_commit()* - writes all prepared data for batch writing mode and reset the batch writing mode.
- *esp_efuse_batch_write_cancel()* - reset the batch writing mode and prepared data.
- *esp_efuse_get_key_dis_read()* - Returns a read protection for the key block.
- *esp_efuse_set_key_dis_read()* - Sets a read protection for the key block.
- *esp_efuse_get_key_dis_write()* - Returns a write protection for the key block.
- *esp_efuse_set_key_dis_write()* - Sets a write protection for the key block.
- *esp_efuse_get_key_purpose()* - Returns the current purpose set for an eFuse key block.
- *esp_efuse_write_key()* - Programs a block of key data to an eFuse block
- *esp_efuse_write_keys()* - Programs keys to unused eFuse blocks
- *esp_efuse_find_purpose()* - Finds a key block with the particular purpose set.
- *esp_efuse_get_keypurpose_dis_write()* - Returns a write protection of the key purpose field for an eFuse key block (for esp32 always true).
- *esp_efuse_key_block_unused()* - Returns true if the key block is unused, false otherwise.

For frequently used fields, special functions are made, like this *esp_efuse_get_chip_ver()*, *esp_efuse_get_pkg_ver()*.

How to add a new field

1. Find a free bits for field. Show *esp_efuse_table.csv* file or run `idf.py show-efuse-table` or the next command:

```
$ ./efuse_table_gen.py esp32/esp_efuse_table.csv --info
eFuse coding scheme: NONE
#       field_name                      efuse_block     bit_start       bit_count
1       WR_DIS_FLASH_CRYPT_CNT          EFUSE_BLK0          2               1
2       WR_DIS_BLK1                     EFUSE_BLK0          7               1
3       WR_DIS_BLK2                     EFUSE_BLK0          8               1
4       WR_DIS_BLK3                     EFUSE_BLK0          9               1
5       RD_DIS_BLK1                     EFUSE_BLK0          16              1
6       RD_DIS_BLK2                     EFUSE_BLK0          17              1
7       RD_DIS_BLK3                     EFUSE_BLK0          18              1
8       FLASH_CRYPT_CNT                 EFUSE_BLK0          20              7
9       MAC_FACTORY                     EFUSE_BLK0          32              8
10      MAC_FACTORY                     EFUSE_BLK0          40              8
11      MAC_FACTORY                     EFUSE_BLK0          48              8
12      MAC_FACTORY                     EFUSE_BLK0          56              8
13      MAC_FACTORY                     EFUSE_BLK0          64              8
14      MAC_FACTORY                     EFUSE_BLK0          72              8
15      MAC_FACTORY_CRC                 EFUSE_BLK0          80              8
16      CHIP_VER_DIS_APP_CPU            EFUSE_BLK0          96              1
17      CHIP_VER_DIS_BT                 EFUSE_BLK0          97              1
18      CHIP_VER_PKG                    EFUSE_BLK0          105             3
19      CHIP_CPU_FREQ_LOW               EFUSE_BLK0          108             1
20      CHIP_CPU_FREQ_RATED             EFUSE_BLK0          109             1
21      CHIP_VER_REV1                   EFUSE_BLK0          111             1
22      ADC_VREF_AND_SDIO_DREF          EFUSE_BLK0          136             6
23      XPD_SDIO_REG                    EFUSE_BLK0          142             1
24      SDIO_TIEH                       EFUSE_BLK0          143             1
25      SDIO_FORCE                      EFUSE_BLK0          144             1
26      ENCRYPT_CONFIG                  EFUSE_BLK0          188             4
27      CONSOLE_DEBUG_DISABLE           EFUSE_BLK0          194             1
28      ABS_DONE_0                      EFUSE_BLK0          196             1
29      DISABLE_JTAG                    EFUSE_BLK0          198             1
30      DISABLE_DL_ENCRYPT              EFUSE_BLK0          199             1
31      DISABLE_DL_DECRYPT              EFUSE_BLK0          200             1
32      DISABLE_DL_CACHE                EFUSE_BLK0          201             1
33      ENCRYPT_FLASH_KEY               EFUSE_BLK1          0               256
34      SECURE_BOOT_KEY                 EFUSE_BLK2          0               256
35      MAC_CUSTOM_CRC                  EFUSE_BLK3          0               8
36      MAC_CUSTOM                      EFUSE_BLK3          8               48
37      ADC1_TP_LOW                     EFUSE_BLK3          96              7
38      ADC1_TP_HIGH                    EFUSE_BLK3          103             9
39      ADC2_TP_LOW                     EFUSE_BLK3          112             7
40      ADC2_TP_HIGH                    EFUSE_BLK3          119             9
41      SECURE_VERSION                  EFUSE_BLK3          128             32
42      MAC_CUSTOM_VER                  EFUSE_BLK3          184             8

Used bits in eFuse table:
EFUSE_BLK0
[2 2] [7 9] [16 18] [20 27] [32 87] [96 97] [105 109] [111 111] [136 144] [188␣
↪191] [194 194] [196 196] [198 201]

EFUSE_BLK1
[0 255]

EFUSE_BLK2
[0 255]

EFUSE_BLK3
[0 55] [96 159] [184 191]

Note: Not printed ranges are free for using. (bits in EFUSE_BLK0 are reserved for␣
↪Espressif)
```

(continues on next page)

(continued from previous page)

```
Parsing eFuse CSV input file $IDF_PATH/components/efuse/esp32/esp_efuse_table.csv .
↪..
Verifying eFuse table...
```

The number of bits not included in square brackets is free (bits in EFUSE_BLK0 are reserved for Espressif). All fields are checked for overlapping.

2. Fill a line for field: field_name, efuse_block, bit_start, bit_count, comment.
3. Run a `show_efuse_table` command to check eFuse table. To generate source files run `efuse_common_table` or `efuse_custom_table` command.

Debug eFuse & Unit tests

Virtual eFuses The Kconfig option *CONFIG_EFUSE_VIRTUAL* will virtualize eFuse values inside the eFuse Manager, so writes are emulated and no eFuse values are permanently changed. This can be useful for debugging app and unit tests. During startup, the eFuses are copied to RAM. All eFuse operations (read and write) are performed with RAM instead of the real eFuse registers.

In addition to the *CONFIG_EFUSE_VIRTUAL* option there is *CONFIG_EFUSE_VIRTUAL_KEEP_IN_FLASH* option that adds a feature to keep eFuses in flash memory. To use this mode the partition_table should have the *efuse* partition. partition.csv: "`efuse_em, data, efuse, , 0x2000,`". During startup, the eFuses are copied from flash or, in case if flash is empty, from real eFuse to RAM and then update flash. This option allows keeping eFuses after reboots (possible to test secure_boot and flash_encryption features with this option).

espefuse.py esptool includes a useful tool for reading/writing ESP32 eFuse bits - espefuse.py.

```
espefuse.py -p PORT summary

Connecting........__
Detecting chip type... ESP32
espefuse.py v3.1-dev
EFUSE_NAME (Block)                          Description  = [Meaningful␣
↪Value] [Readable/Writeable] (Hex Value)
----------------------------------------------------------------------
↪--------------
Calibration fuses:
BLK3_PART_RESERVE (BLOCK0):                 BLOCK3 partially served for ADC␣
↪calibration data    = True R/W (0b1)
ADC_VREF (BLOCK0):                          Voltage reference calibration   ␣
↪                   = 1114 R/W (0b00010)
ADC1_TP_LOW (BLOCK3):                       ADC1 150mV reading              ␣
↪                   = 346 R/W (0b0010001)
ADC1_TP_HIGH (BLOCK3):                      ADC1 850mV reading              ␣
↪                   = 3285 R/W (0b000000101)
ADC2_TP_LOW (BLOCK3):                       ADC2 150mV reading              ␣
↪                   = 449 R/W (0b0000111)
ADC2_TP_HIGH (BLOCK3):                      ADC2 850mV reading              ␣
↪                   = 3362 R/W (0b111110101)

Config fuses:
XPD_SDIO_FORCE (BLOCK0):                    Ignore MTDI pin (GPIO12) for VDD_
↪SDIO on reset      = False R/W (0b0)
XPD_SDIO_REG (BLOCK0):                      If XPD_SDIO_FORCE, enable VDD_
↪SDIO reg on reset    = False R/W (0b0)
XPD_SDIO_TIEH (BLOCK0):                     If XPD_SDIO_FORCE & XPD_SDIO_REG␣
↪                   = 1.8V R/W (0b0)
CLK8M_FREQ (BLOCK0):                        8MHz clock freq override        ␣
↪                   = 53 R/W (0x35)
```

(continues on next page)

(continued from previous page)

```
SPI_PAD_CONFIG_CLK (BLOCK0):             Override SD_CLK pad (GPIO6/
↪SPICLK)                  = 0 R/W (0b00000)
SPI_PAD_CONFIG_Q (BLOCK0):               Override SD_DATA_0 pad (GPIO7/
↪SPIQ)                 = 0 R/W (0b00000)
SPI_PAD_CONFIG_D (BLOCK0):               Override SD_DATA_1 pad (GPIO8/
↪SPID)                 = 0 R/W (0b00000)
SPI_PAD_CONFIG_HD (BLOCK0):              Override SD_DATA_2 pad (GPIO9/
↪SPIHD)                = 0 R/W (0b00000)
SPI_PAD_CONFIG_CS0 (BLOCK0):             Override SD_CMD pad (GPIO11/
↪SPICS0)                 = 0 R/W (0b00000)
DISABLE_SDIO_HOST (BLOCK0):              Disable SDIO host               ␣
↪                  = False R/W (0b0)

Efuse fuses:
WR_DIS (BLOCK0):                         Efuse write disable mask        ␣
↪                  = 0 R/W (0x0000)
RD_DIS (BLOCK0):                         Efuse read disable mask         ␣
↪                  = 0 R/W (0x0)
CODING_SCHEME (BLOCK0):                  Efuse variable block length␣
↪scheme
= 3/4 (BLK1-3 len=192 bits) R/W (0b01)
KEY_STATUS (BLOCK0):                     Usage of efuse block 3␣
↪(reserved)                  = False R/W (0b0)

Identity fuses:
MAC (BLOCK0):                            Factory MAC Address
= 84:0d:8e:18:8e:44 (CRC 0xad OK) R/W
MAC_CRC (BLOCK0):                        CRC8 for factory MAC address    ␣
↪                  = 173 R/W (0xad)
CHIP_VER_REV1 (BLOCK0):                  Silicon Revision 1              ␣
↪                  = True R/W (0b1)
CHIP_VER_REV2 (BLOCK0):                  Silicon Revision 2              ␣
↪                  = False R/W (0b0)
CHIP_VERSION (BLOCK0):                   Reserved for future chip␣
↪versions                    = 2 R/W (0b10)
CHIP_PACKAGE (BLOCK0):                   Chip package identifier         ␣
↪                  = 0 R/W (0b000)
MAC_VERSION (BLOCK3):                    Version of the MAC field        ␣
↪                  = 0 R/W (0x00)

Security fuses:
FLASH_CRYPT_CNT (BLOCK0):                Flash encryption mode counter   ␣
↪                  = 0 R/W (0b0000000)
UART_DOWNLOAD_DIS (BLOCK0):              Disable UART download mode␣
↪(ESP32 rev3 only)       = False R/W (0b0)
FLASH_CRYPT_CONFIG (BLOCK0):             Flash encryption config (key␣
↪tweak bits)           = 0 R/W (0x0)
CONSOLE_DEBUG_DISABLE (BLOCK0):          Disable ROM BASIC interpreter␣
↪fallback              = True R/W (0b1)
ABS_DONE_0 (BLOCK0):                     Secure boot V1 is enabled for␣
↪bootloader image      = False R/W (0b0)
ABS_DONE_1 (BLOCK0):                     Secure boot V2 is enabled for␣
↪bootloader image      = False R/W (0b0)
JTAG_DISABLE (BLOCK0):                   Disable JTAG                    ␣
↪                  = False R/W (0b0)
DISABLE_DL_ENCRYPT (BLOCK0):             Disable flash encryption in UART␣
↪bootloader         = False R/W (0b0)
DISABLE_DL_DECRYPT (BLOCK0):             Disable flash decryption in UART␣
↪bootloader         = False R/W (0b0)
DISABLE_DL_CACHE (BLOCK0):               Disable flash cache in UART␣
↪bootloader              = False R/W (0b0)
```

(continues on next page)

(continued from previous page)

```
BLOCK1 (BLOCK1):                          Flash encryption key
= 00 00 00 00 00 00 00 00 00 00 00 00 00 00 00 00 00 00 00 00 00 00 00 00␣
↪R/W
BLOCK2 (BLOCK2):                          Secure boot key
= 00 00 00 00 00 00 00 00 00 00 00 00 00 00 00 00 00 00 00 00 00 00 00 00␣
↪R/W
BLOCK3 (BLOCK3):                          Variable Block 3
= 00 00 00 00 00 00 00 00 00 00 00 91 02 87 fa 00 00 00 00 00 00 00 00 00␣
↪R/W

Flash voltage (VDD_SDIO) determined by GPIO12 on reset (High for 1.8V,␣
↪Low/NC for 3.3V).
```

To get a dump for all eFuse registers.

```
espefuse.py -p PORT dump

Connecting........_
Detecting chip type... ESP32
BLOCK0          (                ) [0 ] read_regs: 00000000 8e188e44␣
↪00ad840d 0000e000 00000235 00000000 00000005
BLOCK1          (flash_encryption) [1 ] read_regs: 00000000 00000000␣
↪00000000 00000000 00000000 00000000
BLOCK2          (secure_boot_v1 s) [2 ] read_regs: 00000000 00000000␣
↪00000000 00000000 00000000 00000000
BLOCK3          (                ) [3 ] read_regs: 00000000 00000000␣
↪00000000 fa870291 00000000 00000000
espefuse.py v3.1-dev
```

Header File

- components/efuse/include/esp_efuse.h

Functions

esp_err_t **esp_efuse_read_field_blob** (const *esp_efuse_desc_t* *field[], void *dst, size_t dst_size_bits)

Reads bits from EFUSE field and writes it into an array.

The number of read bits will be limited to the minimum value from the description of the bits in "field" structure or "dst_size_bits" required size. Use "esp_efuse_get_field_size()" function to determine the length of the field.

Note: Please note that reading in the batch mode does not show uncommitted changes.

Parameters

- **field** –**[in]** A pointer to the structure describing the fields of efuse.
- **dst** –**[out]** A pointer to array that will contain the result of reading.
- **dst_size_bits** –**[in]** The number of bits required to read. If the requested number of bits is greater than the field, the number will be limited to the field size.

Returns

- ESP_OK: The operation was successfully completed.
- ESP_ERR_INVALID_ARG: Error in the passed arguments.

bool **esp_efuse_read_field_bit** (const *esp_efuse_desc_t* *field[])

Read a single bit eFuse field as a boolean value.

Note: The value must exist and must be a single bit wide. If there is any possibility of an error in the provided arguments, call esp_efuse_read_field_blob() and check the returned value instead.

Note: If assertions are enabled and the parameter is invalid, execution will abort

Note: Please note that reading in the batch mode does not show uncommitted changes.

Parameters **`field`** –**[in]** A pointer to the structure describing the fields of efuse.

Returns

- true: The field parameter is valid and the bit is set.
- false: The bit is not set, or the parameter is invalid and assertions are disabled.

esp_err_t **`esp_efuse_read_field_cnt`**(const *esp_efuse_desc_t* *field[], size_t *out_cnt)

Reads bits from EFUSE field and returns number of bits programmed as "1".

If the bits are set not sequentially, they will still be counted.

Note: Please note that reading in the batch mode does not show uncommitted changes.

Parameters

- **`field`** –**[in]** A pointer to the structure describing the fields of efuse.
- **`out_cnt`** –**[out]** A pointer that will contain the number of programmed as "1" bits.

Returns

- ESP_OK: The operation was successfully completed.
- ESP_ERR_INVALID_ARG: Error in the passed arguments.

esp_err_t **`esp_efuse_write_field_blob`**(const *esp_efuse_desc_t* *field[], const void *src, size_t src_size_bits)

Writes array to EFUSE field.

The number of write bits will be limited to the minimum value from the description of the bits in "field" structure or "src_size_bits" required size. Use "esp_efuse_get_field_size()" function to determine the length of the field. After the function is completed, the writing registers are cleared.

Parameters

- **`field`** –**[in]** A pointer to the structure describing the fields of efuse.
- **`src`** –**[in]** A pointer to array that contains the data for writing.
- **`src_size_bits`** –**[in]** The number of bits required to write.

Returns

- ESP_OK: The operation was successfully completed.
- ESP_ERR_INVALID_ARG: Error in the passed arguments.
- ESP_ERR_EFUSE_REPEATED_PROG: Error repeated programming of programmed bits is strictly forbidden.
- ESP_ERR_CODING: Error range of data does not match the coding scheme.

esp_err_t **`esp_efuse_write_field_cnt`**(const *esp_efuse_desc_t* *field[], size_t cnt)

Writes a required count of bits as "1" to EFUSE field.

If there are no free bits in the field to set the required number of bits to "1", ESP_ERR_EFUSE_CNT_IS_FULL error is returned, the field will not be partially recorded. After the function is completed, the writing registers are cleared.

Parameters

- **`field`** –**[in]** A pointer to the structure describing the fields of efuse.

- **cnt** –**[in]** Required number of programmed as "1" bits.

Returns

- ESP_OK: The operation was successfully completed.
- ESP_ERR_INVALID_ARG: Error in the passed arguments.
- ESP_ERR_EFUSE_CNT_IS_FULL: Not all requested cnt bits is set.

esp_err_t **esp_efuse_write_field_bit** (const *esp_efuse_desc_t* *field[])

Write a single bit eFuse field to 1.

For use with eFuse fields that are a single bit. This function will write the bit to value 1 if it is not already set, or does nothing if the bit is already set.

This is equivalent to calling esp_efuse_write_field_cnt() with the cnt parameter equal to 1, except that it will return ESP_OK if the field is already set to 1.

Parameters **field** –**[in]** Pointer to the structure describing the efuse field.

Returns

- ESP_OK: The operation was successfully completed, or the bit was already set to value 1.
- ESP_ERR_INVALID_ARG: Error in the passed arugments, including if the efuse field is not 1 bit wide.

esp_err_t **esp_efuse_set_write_protect** (esp_efuse_block_t blk)

Sets a write protection for the whole block.

After that, it is impossible to write to this block. The write protection does not apply to block 0.

Parameters **blk** –**[in]** Block number of eFuse. (EFUSE_BLK1, EFUSE_BLK2 and EFUSE_BLK3)

Returns

- ESP_OK: The operation was successfully completed.
- ESP_ERR_INVALID_ARG: Error in the passed arguments.
- ESP_ERR_EFUSE_CNT_IS_FULL: Not all requested cnt bits is set.
- ESP_ERR_NOT_SUPPORTED: The block does not support this command.

esp_err_t **esp_efuse_set_read_protect** (esp_efuse_block_t blk)

Sets a read protection for the whole block.

After that, it is impossible to read from this block. The read protection does not apply to block 0.

Parameters **blk** –**[in]** Block number of eFuse. (EFUSE_BLK1, EFUSE_BLK2 and EFUSE_BLK3)

Returns

- ESP_OK: The operation was successfully completed.
- ESP_ERR_INVALID_ARG: Error in the passed arguments.
- ESP_ERR_EFUSE_CNT_IS_FULL: Not all requested cnt bits is set.
- ESP_ERR_NOT_SUPPORTED: The block does not support this command.

int **esp_efuse_get_field_size** (const *esp_efuse_desc_t* *field[])

Returns the number of bits used by field.

Parameters **field** –**[in]** A pointer to the structure describing the fields of efuse.

Returns Returns the number of bits used by field.

uint32_t **esp_efuse_read_reg** (esp_efuse_block_t blk, unsigned int num_reg)

Returns value of efuse register.

This is a thread-safe implementation. Example: EFUSE_BLK2_RDATA3_REG where (blk=2, num_reg=3)

Note: Please note that reading in the batch mode does not show uncommitted changes.

Parameters

- **blk** –**[in]** Block number of eFuse.

- **num_reg** –**[in]** The register number in the block.

Returns Value of register

esp_err_t **esp_efuse_write_reg**(esp_efuse_block_t blk, unsigned int num_reg, uint32_t val)

Write value to efuse register.

Apply a coding scheme if necessary. This is a thread-safe implementation. Example: EFUSE_BLK3_WDATA0_REG where (blk=3, num_reg=0)

Parameters
- **blk** –**[in]** Block number of eFuse.
- **num_reg** –**[in]** The register number in the block.
- **val** –**[in]** Value to write.

Returns
- ESP_OK: The operation was successfully completed.
- ESP_ERR_EFUSE_REPEATED_PROG: Error repeated programming of programmed bits is strictly forbidden.

esp_efuse_coding_scheme_t **esp_efuse_get_coding_scheme**(esp_efuse_block_t blk)

Return efuse coding scheme for blocks.

Note: The coding scheme is applicable only to 1, 2 and 3 blocks. For 0 block, the coding scheme is always NONE.

Parameters **blk** –**[in]** Block number of eFuse.
Returns Return efuse coding scheme for blocks

esp_err_t **esp_efuse_read_block**(esp_efuse_block_t blk, void *dst_key, size_t offset_in_bits, size_t size_bits)

Read key to efuse block starting at the offset and the required size.

Note: Please note that reading in the batch mode does not show uncommitted changes.

Parameters
- **blk** –**[in]** Block number of eFuse.
- **dst_key** –**[in]** A pointer to array that will contain the result of reading.
- **offset_in_bits** –**[in]** Start bit in block.
- **size_bits** –**[in]** The number of bits required to read.

Returns
- ESP_OK: The operation was successfully completed.
- ESP_ERR_INVALID_ARG: Error in the passed arguments.
- ESP_ERR_CODING: Error range of data does not match the coding scheme.

esp_err_t **esp_efuse_write_block**(esp_efuse_block_t blk, const void *src_key, size_t offset_in_bits, size_t size_bits)

Write key to efuse block starting at the offset and the required size.

Parameters
- **blk** –**[in]** Block number of eFuse.
- **src_key** –**[in]** A pointer to array that contains the key for writing.
- **offset_in_bits** –**[in]** Start bit in block.
- **size_bits** –**[in]** The number of bits required to write.

Returns
- ESP_OK: The operation was successfully completed.
- ESP_ERR_INVALID_ARG: Error in the passed arguments.
- ESP_ERR_CODING: Error range of data does not match the coding scheme.
- ESP_ERR_EFUSE_REPEATED_PROG: Error repeated programming of programmed bits

uint8_t **esp_efuse_get_chip_ver**(void)

Returns chip version from efuse.

Returns chip version

uint32_t **esp_efuse_get_pkg_ver**(void)

Returns chip package from efuse.

Returns chip package

void **esp_efuse_reset**(void)

Reset efuse write registers.

Efuse write registers are written to zero, to negate any changes that have been staged here.

Note: This function is not threadsafe, if calling code updates efuse values from multiple tasks then this is caller's responsibility to serialise.

---

void **esp_efuse_disable_basic_rom_console**(void)

Disable BASIC ROM Console via efuse.

By default, if booting from flash fails the ESP32 will boot a BASIC console in ROM.

Call this function (from bootloader or app) to permanently disable the console on this chip.

esp_err_t **esp_efuse_disable_rom_download_mode**(void)

Disable ROM Download Mode via eFuse.

Permanently disables the ROM Download Mode feature. Once disabled, if the SoC is booted with strapping pins set for ROM Download Mode then an error is printed instead.

Note: Not all SoCs support this option. An error will be returned if called on an ESP32 with a silicon revision lower than 3, as these revisions do not support this option.

Note: If ROM Download Mode is already disabled, this function does nothing and returns success.

Returns

- ESP_OK If the eFuse was successfully burned, or had already been burned.
- ESP_ERR_NOT_SUPPORTED (ESP32 only) This SoC is not capable of disabling UART download mode
- ESP_ERR_INVALID_STATE (ESP32 only) This eFuse is write protected and cannot be written

esp_err_t **esp_efuse_set_rom_log_scheme**(*esp_efuse_rom_log_scheme_t* log_scheme)

Set boot ROM log scheme via eFuse.

Note: By default, the boot ROM will always print to console. This API can be called to set the log scheme only once per chip, once the value is changed from the default it can't be changed again.

Parameters **log_scheme** – Supported ROM log scheme

Returns

- ESP_OK If the eFuse was successfully burned, or had already been burned.
- ESP_ERR_NOT_SUPPORTED (ESP32 only) This SoC is not capable of setting ROM log scheme
- ESP_ERR_INVALID_STATE This eFuse is write protected or has been burned already

uint32_t **esp_efuse_read_secure_version**(void)

Return secure_version from efuse field.

Returns Secure version from efuse field

bool **esp_efuse_check_secure_version**(uint32_t secure_version)

Check secure_version from app and secure_version and from efuse field.

Parameters **secure_version** –Secure version from app.
Returns
- True: If version of app is equal or more then secure_version from efuse.

esp_err_t **esp_efuse_update_secure_version**(uint32_t secure_version)

Write efuse field by secure_version value.

Update the secure_version value is available if the coding scheme is None. Note: Do not use this function in your applications. This function is called as part of the other API.

Parameters **secure_version** –**[in]** Secure version from app.
Returns
- ESP_OK: Successful.
- ESP_FAIL: secure version of app cannot be set to efuse field.
- ESP_ERR_NOT_SUPPORTED: Anti rollback is not supported with the 3/4 and Repeat coding scheme.

esp_err_t **esp_efuse_batch_write_begin**(void)

Set the batch mode of writing fields.

This mode allows you to write the fields in the batch mode when need to burn several efuses at one time. To enable batch mode call begin() then perform as usually the necessary operations read and write and at the end call commit() to actually burn all written efuses. The batch mode can be used nested. The commit will be done by the last commit() function. The number of begin() functions should be equal to the number of commit() functions.

Note: If batch mode is enabled by the first task, at this time the second task cannot write/read efuses. The second task will wait for the first task to complete the batch operation.

```
// Example of using the batch writing mode.

// set the batch writing mode
esp_efuse_batch_write_begin();

// use any writing functions as usual
esp_efuse_write_field_blob(ESP_EFUSE_...);
esp_efuse_write_field_cnt(ESP_EFUSE_...);
esp_efuse_set_write_protect(EFUSE_BLKx);
esp_efuse_write_reg(EFUSE_BLKx, ...);
esp_efuse_write_block(EFUSE_BLKx, ...);
esp_efuse_write(ESP_EFUSE_1, 3);  // ESP_EFUSE_1 == 1, here we write a new␣
↪value = 3. The changes will be burn by the commit() function.
esp_efuse_read_...(ESP_EFUSE_1);  // this function returns ESP_EFUSE_1 == 1␣
↪because uncommitted changes are not readable, it will be available only␣
↪after commit.
...

// esp_efuse_batch_write APIs can be called recursively.
esp_efuse_batch_write_begin();
esp_efuse_set_write_protect(EFUSE_BLKx);
esp_efuse_batch_write_commit(); // the burn will be skipped here, it will be␣
↪done in the last commit().
```

(continues on next page)

(continued from previous page)

```
...

// Write all of these fields to the efuse registers
esp_efuse_batch_write_commit();
esp_efuse_read_...(ESP_EFUSE_1);  // this function returns ESP_EFUSE_1 == 3.
```

Note: Please note that reading in the batch mode does not show uncommitted changes.

Returns
- ESP_OK: Successful.

esp_err_t **esp_efuse_batch_write_cancel**(void)

Reset the batch mode of writing fields.

It will reset the batch writing mode and any written changes.

Returns
- ESP_OK: Successful.
- ESP_ERR_INVALID_STATE: Tha batch mode was not set.

esp_err_t **esp_efuse_batch_write_commit**(void)

Writes all prepared data for the batch mode.

Must be called to ensure changes are written to the efuse registers. After this the batch writing mode will be reset.

Returns
- ESP_OK: Successful.
- ESP_ERR_INVALID_STATE: The deferred writing mode was not set.

bool **esp_efuse_block_is_empty**(esp_efuse_block_t block)

Checks that the given block is empty.

Returns
- True: The block is empty.
- False: The block is not empty or was an error.

bool **esp_efuse_get_key_dis_read**(esp_efuse_block_t block)

Returns a read protection for the key block.

Parameters **block** – **[in]** A key block in the range EFUSE_BLK_KEY0..EFUSE_BLK_KEY_MAX
Returns True: The key block is read protected False: The key block is readable.

esp_err_t **esp_efuse_set_key_dis_read**(esp_efuse_block_t block)

Sets a read protection for the key block.

Parameters **block** – **[in]** A key block in the range EFUSE_BLK_KEY0..EFUSE_BLK_KEY_MAX
Returns
- ESP_OK: Successful.
- ESP_ERR_INVALID_ARG: Error in the passed arguments.
- ESP_ERR_EFUSE_REPEATED_PROG: Error repeated programming of programmed bits is strictly forbidden.
- ESP_ERR_CODING: Error range of data does not match the coding scheme.

bool **esp_efuse_get_key_dis_write**(esp_efuse_block_t block)

Returns a write protection for the key block.

Parameters **block** – **[in]** A key block in the range EFUSE_BLK_KEY0..EFUSE_BLK_KEY_MAX
Returns True: The key block is write protected False: The key block is writeable.

esp_err_t **esp_efuse_set_key_dis_write**(esp_efuse_block_t block)

Sets a write protection for the key block.

Parameters **block** –**[in]** A key block in the range EFUSE_BLK_KEY0..EFUSE_BLK_KEY_MAX
Returns
- ESP_OK: Successful.
- ESP_ERR_INVALID_ARG: Error in the passed arguments.
- ESP_ERR_EFUSE_REPEATED_PROG: Error repeated programming of programmed bits is strictly forbidden.
- ESP_ERR_CODING: Error range of data does not match the coding scheme.

bool **esp_efuse_key_block_unused**(esp_efuse_block_t block)

Returns true if the key block is unused, false otherwise.

An unused key block is all zero content, not read or write protected, and has purpose 0 (ESP_EFUSE_KEY_PURPOSE_USER)

Parameters **block** –key block to check.
Returns
- True if key block is unused,
- False if key block is used or the specified block index is not a key block.

bool **esp_efuse_find_purpose**(esp_efuse_purpose_t purpose, esp_efuse_block_t *block)

Find a key block with the particular purpose set.

Parameters
- **purpose** –**[in]** Purpose to search for.
- **block** –**[out]** Pointer in the range EFUSE_BLK_KEY0..EFUSE_BLK_KEY_MAX which will be set to the key block if found. Can be NULL, if only need to test the key block exists.

Returns
- True: If found,
- False: If not found (value at block pointer is unchanged).

bool **esp_efuse_get_keypurpose_dis_write**(esp_efuse_block_t block)

Returns a write protection of the key purpose field for an efuse key block.

Note: For ESP32: no keypurpose, it returns always True.

Parameters **block** –**[in]** A key block in the range EFUSE_BLK_KEY0..EFUSE_BLK_KEY_MAX
Returns True: The key purpose is write protected. False: The key purpose is writeable.

esp_efuse_purpose_t **esp_efuse_get_key_purpose**(esp_efuse_block_t block)

Returns the current purpose set for an efuse key block.

Parameters **block** –**[in]** A key block in the range EFUSE_BLK_KEY0..EFUSE_BLK_KEY_MAX
Returns
- Value: If Successful, it returns the value of the purpose related to the given key block.
- ESP_EFUSE_KEY_PURPOSE_MAX: Otherwise.

esp_err_t **esp_efuse_write_key**(esp_efuse_block_t block, esp_efuse_purpose_t purpose, const void *key, size_t key_size_bytes)

Program a block of key data to an efuse block.

The burn of a key, protection bits, and a purpose happens in batch mode.

Parameters
- **block** –**[in]** Block to read purpose for. Must be in range EFUSE_BLK_KEY0 to EFUSE_BLK_KEY_MAX. Key block must be unused (esp_efuse_key_block_unused).
- **purpose** –**[in]** Purpose to set for this key. Purpose must be already unset.
- **key** –**[in]** Pointer to data to write.

- **key_size_bytes** –**[in]** Bytes length of data to write.

Returns

- ESP_OK: Successful.
- ESP_ERR_INVALID_ARG: Error in the passed arguments.
- ESP_ERR_INVALID_STATE: Error in efuses state, unused block not found.
- ESP_ERR_EFUSE_REPEATED_PROG: Error repeated programming of programmed bits is strictly forbidden.
- ESP_ERR_CODING: Error range of data does not match the coding scheme.

esp_err_t **esp_efuse_write_keys**(const esp_efuse_purpose_t purposes[], uint8_t keys[][32], unsigned number_of_keys)

Program keys to unused efuse blocks.

The burn of keys, protection bits, and purposes happens in batch mode.

Parameters

- **purposes** –**[in]** Array of purposes (purpose[number_of_keys]).
- **keys** –**[in]** Array of keys (uint8_t keys[number_of_keys][32]). Each key is 32 bytes long.
- **number_of_keys** –**[in]** The number of keys to write (up to 6 keys).

Returns

- ESP_OK: Successful.
- ESP_ERR_INVALID_ARG: Error in the passed arguments.
- ESP_ERR_INVALID_STATE: Error in efuses state, unused block not found.
- ESP_ERR_NOT_ENOUGH_UNUSED_KEY_BLOCKS: Error not enough unused key blocks available
- ESP_ERR_EFUSE_REPEATED_PROG: Error repeated programming of programmed bits is strictly forbidden.
- ESP_ERR_CODING: Error range of data does not match the coding scheme.

esp_err_t **esp_efuse_check_errors**(void)

Checks eFuse errors in BLOCK0.

It does a BLOCK0 check if eFuse EFUSE_ERR_RST_ENABLE is set. If BLOCK0 has an error, it prints the error and returns ESP_FAIL, which should be treated as esp_restart.

Note: Refers to ESP32-C3 only.

Returns

- ESP_OK: No errors in BLOCK0.
- ESP_FAIL: Error in BLOCK0 requiring reboot.

Structures

struct **esp_efuse_desc_t**

Type definition for an eFuse field.

Public Members

esp_efuse_block_t **efuse_block**

Block of eFuse

uint8_t **bit_start**

Start bit [0..255]

uint16_t **bit_count**
Length of bit field [1..-]

Macros

ESP_ERR_EFUSE
Base error code for efuse api.

ESP_OK_EFUSE_CNT
OK the required number of bits is set.

ESP_ERR_EFUSE_CNT_IS_FULL
Error field is full.

ESP_ERR_EFUSE_REPEATED_PROG
Error repeated programming of programmed bits is strictly forbidden.

ESP_ERR_CODING
Error while a encoding operation.

ESP_ERR_NOT_ENOUGH_UNUSED_KEY_BLOCKS
Error not enough unused key blocks available

ESP_ERR_DAMAGED_READING
Error. Burn or reset was done during a reading operation leads to damage read data. This error is internal to the efuse component and not returned by any public API.

Enumerations

enum **esp_efuse_rom_log_scheme_t**
Type definition for ROM log scheme.

Values:

enumerator **ESP_EFUSE_ROM_LOG_ALWAYS_ON**
Always enable ROM logging

enumerator **ESP_EFUSE_ROM_LOG_ON_GPIO_LOW**
ROM logging is enabled when specific GPIO level is low during start up

enumerator **ESP_EFUSE_ROM_LOG_ON_GPIO_HIGH**
ROM logging is enabled when specific GPIO level is high during start up

enumerator **ESP_EFUSE_ROM_LOG_ALWAYS_OFF**
Disable ROM logging permanently

2.7.5 Error Codes and Helper Functions

This section lists definitions of common ESP-IDF error codes and several helper functions related to error handling.

For general information about error codes in ESP-IDF, see *Error Handling*.

For the full list of error codes defined in ESP-IDF, see *Error Code Reference*.

API Reference

Header File

- components/esp_common/include/esp_err.h

Functions

const char ***esp_err_to_name** (*esp_err_t* code)

Returns string for esp_err_t error codes.

This function finds the error code in a pre-generated lookup-table and returns its string representation.

The function is generated by the Python script tools/gen_esp_err_to_name.py which should be run each time an esp_err_t error is modified, created or removed from the IDF project.

Parameters **code** –esp_err_t error code
Returns string error message

const char ***esp_err_to_name_r** (*esp_err_t* code, char *buf, size_t buflen)

Returns string for esp_err_t and system error codes.

This function finds the error code in a pre-generated lookup-table of esp_err_t errors and returns its string representation. If the error code is not found then it is attempted to be found among system errors.

The function is generated by the Python script tools/gen_esp_err_to_name.py which should be run each time an esp_err_t error is modified, created or removed from the IDF project.

Parameters
- **code** –esp_err_t error code
- **buf** –**[out]** buffer where the error message should be written
- **buflen** –Size of buffer buf. At most buflen bytes are written into the buf buffer (including the terminating null byte).

Returns buf containing the string error message

Macros

ESP_OK

esp_err_t value indicating success (no error)

ESP_FAIL

Generic esp_err_t code indicating failure

ESP_ERR_NO_MEM

Out of memory

ESP_ERR_INVALID_ARG

Invalid argument

ESP_ERR_INVALID_STATE

Invalid state

ESP_ERR_INVALID_SIZE

Invalid size

ESP_ERR_NOT_FOUND

Requested resource not found

ESP_ERR_NOT_SUPPORTED

Operation or feature not supported

ESP_ERR_TIMEOUT

Operation timed out

ESP_ERR_INVALID_RESPONSE

Received response was invalid

ESP_ERR_INVALID_CRC

CRC or checksum was invalid

ESP_ERR_INVALID_VERSION

Version was invalid

ESP_ERR_INVALID_MAC

MAC address was invalid

ESP_ERR_NOT_FINISHED

There are items remained to retrieve

ESP_ERR_WIFI_BASE

Starting number of WiFi error codes

ESP_ERR_MESH_BASE

Starting number of MESH error codes

ESP_ERR_FLASH_BASE

Starting number of flash error codes

ESP_ERR_HW_CRYPTO_BASE

Starting number of HW cryptography module error codes

ESP_ERR_MEMPROT_BASE

Starting number of Memory Protection API error codes

ESP_ERROR_CHECK(x)

Macro which can be used to check the error code, and terminate the program in case the code is not ESP_OK. Prints the error code, error location, and the failed statement to serial output.

Disabled if assertions are disabled.

ESP_ERROR_CHECK_WITHOUT_ABORT(x)

Macro which can be used to check the error code. Prints the error code, error location, and the failed statement to serial output. In comparison with ESP_ERROR_CHECK(), this prints the same error message but isn't terminating the program.

Type Definitions

typedef int **esp_err_t**

2.7.6 ESP HTTPS OTA

Overview

`esp_https_ota` provides simplified APIs to perform firmware upgrades over HTTPS. It's an abstraction layer over existing OTA APIs.

Application Example

```
esp_err_t do_firmware_upgrade()
{
    esp_http_client_config_t config = {
        .url = CONFIG_FIRMWARE_UPGRADE_URL,
        .cert_pem = (char *)server_cert_pem_start,
    };
    esp_err_t ret = esp_https_ota(&config);
    if (ret == ESP_OK) {
        esp_restart();
    } else {
        return ESP_FAIL;
    }
    return ESP_OK;
}
```

Partial Image Download over HTTPS

To use partial image download feature, enable `partial_http_download` configuration in `esp_https_ota_config_t`. When this configuration is enabled, firmware image will be downloaded in multiple HTTP requests of specified size. Maximum content length of each request can be specified by setting `max_http_request_size` to required value.

This option is useful while fetching image from a service like AWS S3, where mbedTLS Rx buffer size (*CONFIG_MBEDTLS_SSL_IN_CONTENT_LEN*) can be set to lower value which is not possible without enabling this configuration.

Default value of mbedTLS Rx buffer size is set to 16K. By using partial_http_download with max_http_request_size of 4K, size of mbedTLS Rx buffer can be reduced to 4K. With this confiuration, memory saving of around 12K is expected.

Signature Verification

For additional security, signature of OTA firmware images can be verified. For that, refer *Secure OTA Updates Without Secure boot*

API Reference

Header File

- components/esp_https_ota/include/esp_https_ota.h

Functions

esp_err_t **esp_https_ota**(const *esp_http_client_config_t* *config)

HTTPS OTA Firmware upgrade.

This function allocates HTTPS OTA Firmware upgrade context, establishes HTTPS connection, reads image data from HTTP stream and writes it to OTA partition and finishes HTTPS OTA Firmware upgrade operation.

This API supports URL redirection, but if CA cert of URLs differ then it should be appended to `cert_pem` member of `config`.

Note: This API handles the entire OTA operation, so if this API is being used then no other APIs from `esp_https_ota` component should be called. If more information and control is needed during the HTTPS OTA process, then one can use `esp_https_ota_begin` and subsequent APIs. If this API returns successfully, esp_restart() must be called to boot from the new firmware image.

Parameters **`config`** –**[in]** pointer to *esp_http_client_config_t* structure.

Returns

- ESP_OK: OTA data updated, next reboot will use specified partition.
- ESP_FAIL: For generic failure.
- ESP_ERR_INVALID_ARG: Invalid argument
- ESP_ERR_OTA_VALIDATE_FAILED: Invalid app image
- ESP_ERR_NO_MEM: Cannot allocate memory for OTA operation.
- ESP_ERR_FLASH_OP_TIMEOUT or ESP_ERR_FLASH_OP_FAIL: Flash write failed.
- For other return codes, refer OTA documentation in esp-idf ' s app_update component.

esp_err_t **`esp_https_ota_begin`**(*esp_https_ota_config_t* *ota_config, *esp_https_ota_handle_t* *handle)

Start HTTPS OTA Firmware upgrade.

This function initializes ESP HTTPS OTA context and establishes HTTPS connection. This function must be invoked first. If this function returns successfully, then `esp_https_ota_perform` should be called to continue with the OTA process and there should be a call to `esp_https_ota_finish` on completion of OTA operation or on failure in subsequent operations. This API supports URL redirection, but if CA cert of URLs differ then it should be appended to `cert_pem` member of `http_config`, which is a part of `ota_config`. In case of error, this API explicitly sets `handle` to NULL.

Note: This API is blocking, so setting `is_async` member of `http_config` structure will result in an error.

Parameters

- **`ota_config`** –**[in]** pointer to *esp_https_ota_config_t* structure
- **`handle`** –**[out]** pointer to an allocated data of type `esp_https_ota_handle_t` which will be initialised in this function

Returns

- ESP_OK: HTTPS OTA Firmware upgrade context initialised and HTTPS connection established
- ESP_FAIL: For generic failure.
- ESP_ERR_INVALID_ARG: Invalid argument (missing/incorrect config, certificate, etc.)
- For other return codes, refer documentation in app_update component and esp_http_client component in esp-idf.

esp_err_t **`esp_https_ota_perform`**(*esp_https_ota_handle_t* https_ota_handle)

Read image data from HTTP stream and write it to OTA partition.

This function reads image data from HTTP stream and writes it to OTA partition. This function must be called only if esp_https_ota_begin() returns successfully. This function must be called in a loop since it returns after every HTTP read operation thus giving you the flexibility to stop OTA operation midway.

Parameters **`https_ota_handle`** –**[in]** pointer to esp_https_ota_handle_t structure

Returns

- ESP_ERR_HTTPS_OTA_IN_PROGRESS: OTA update is in progress, call this API again to continue.
- ESP_OK: OTA update was successful
- ESP_FAIL: OTA update failed

- ESP_ERR_INVALID_ARG: Invalid argument
- ESP_ERR_OTA_VALIDATE_FAILED: Invalid app image
- ESP_ERR_NO_MEM: Cannot allocate memory for OTA operation.
- ESP_ERR_FLASH_OP_TIMEOUT or ESP_ERR_FLASH_OP_FAIL: Flash write failed.
- For other return codes, refer OTA documentation in esp-idf's app_update component.

bool **esp_https_ota_is_complete_data_received**(*esp_https_ota_handle_t* https_ota_handle)

Checks if complete data was received or not.

Note: This API can be called just before esp_https_ota_finish() to validate if the complete image was indeed received.

Parameters **https_ota_handle** –**[in]** pointer to esp_https_ota_handle_t structure

Returns

- false
- true

esp_err_t **esp_https_ota_finish**(*esp_https_ota_handle_t* https_ota_handle)

Clean-up HTTPS OTA Firmware upgrade and close HTTPS connection.

This function closes the HTTP connection and frees the ESP HTTPS OTA context. This function switches the boot partition to the OTA partition containing the new firmware image.

Note: If this API returns successfully, esp_restart() must be called to boot from the new firmware image esp_https_ota_finish should not be called after calling esp_https_ota_abort

---

Parameters **https_ota_handle** –**[in]** pointer to esp_https_ota_handle_t structure

Returns

- ESP_OK: Clean-up successful
- ESP_ERR_INVALID_STATE
- ESP_ERR_INVALID_ARG: Invalid argument
- ESP_ERR_OTA_VALIDATE_FAILED: Invalid app image

esp_err_t **esp_https_ota_abort**(*esp_https_ota_handle_t* https_ota_handle)

Clean-up HTTPS OTA Firmware upgrade and close HTTPS connection.

This function closes the HTTP connection and frees the ESP HTTPS OTA context.

Note: esp_https_ota_abort should not be called after calling esp_https_ota_finish

---

Parameters **https_ota_handle** –**[in]** pointer to esp_https_ota_handle_t structure

Returns

- ESP_OK: Clean-up successful
- ESP_ERR_INVALID_STATE: Invalid ESP HTTPS OTA state
- ESP_FAIL: OTA not started
- ESP_ERR_NOT_FOUND: OTA handle not found
- ESP_ERR_INVALID_ARG: Invalid argument

esp_err_t **esp_https_ota_get_img_desc**(*esp_https_ota_handle_t* https_ota_handle, *esp_app_desc_t* *new_app_info)

Reads app description from image header. The app description provides information like the "Firmware version" of the image.

Note: This API can be called only after esp_https_ota_begin() and before esp_https_ota_perform(). Calling this API is not mandatory.

Parameters
- **https_ota_handle** –**[in]** pointer to esp_https_ota_handle_t structure
- **new_app_info** –**[out]** pointer to an allocated *esp_app_desc_t* structure

Returns
- ESP_ERR_INVALID_ARG: Invalid arguments
- ESP_FAIL: Failed to read image descriptor
- ESP_OK: Successfully read image descriptor

int **esp_https_ota_get_image_len_read**(*esp_https_ota_handle_t* https_ota_handle)

This function returns OTA image data read so far.

Note: This API should be called only if `esp_https_ota_perform()` has been called atleast once or if `esp_https_ota_get_img_desc` has been called before.

Parameters **https_ota_handle** –**[in]** pointer to esp_https_ota_handle_t structure

Returns
- -1 On failure
- total bytes read so far

int **esp_https_ota_get_image_size**(*esp_https_ota_handle_t* https_ota_handle)

This function returns OTA image total size.

Note: This API should be called after esp_https_ota_begin() has been already called. This can be used to create some sort of progress indication (in combination with esp_https_ota_get_image_len_read())

Parameters **https_ota_handle** –**[in]** pointer to esp_https_ota_handle_t structure

Returns
- -1 On failure or chunked encoding
- total bytes of image

Structures

struct **esp_https_ota_config_t**

ESP HTTPS OTA configuration.

Public Members

const *esp_http_client_config_t* ***http_config**

ESP HTTP client configuration

http_client_init_cb_t **http_client_init_cb**

Callback after ESP HTTP client is initialised

bool **bulk_flash_erase**

Erase entire flash partition during initialization. By default flash partition is erased during write operation and in chunk of 4K sector size

bool **partial_http_download**

Enable Firmware image to be downloaded over multiple HTTP requests

int **max_http_request_size**

Maximum request size for partial HTTP download

Macros

ESP_ERR_HTTPS_OTA_BASE

ESP_ERR_HTTPS_OTA_IN_PROGRESS

Type Definitions

typedef void ***esp_https_ota_handle_t**

typedef *esp_err_t* (***http_client_init_cb_t**)(*esp_http_client_handle_t*)

2.7.7 POSIX Threads Support

Overview

ESP-IDF is based on FreeRTOS but offers a range of POSIX-compatible APIs that allow easy porting of third party code. This includes support for common parts of the POSIX Threads "pthreads" API.

POSIX Threads are implemented in ESP-IDF as wrappers around equivalent FreeRTOS features. The runtime memory or performance overhead of using the pthreads API is quite low, but not every feature available in either pthreads or FreeRTOS is available via the ESP-IDF pthreads support.

Pthreads can be used in ESP-IDF by including standard `pthread.h` header, which is included in the toolchain libc. An additional ESP-IDF specific header, `esp_pthread.h`, provides additional non-POSIX APIs for using some ESP-IDF features with pthreads.

C++ Standard Library implementations for `std::thread`, `std::mutex`, `std::condition_variable`, etc. are implemented using pthreads (via GCC libstdc++). Therefore, restrictions mentioned here also apply to the equivalent C++ standard library functionality.

RTOS Integration

Unlike many operating systems using POSIX Threads, ESP-IDF is a real-time operating system with a real-time scheduler. This means that a thread will only stop running if a higher priority task is ready to run, the thread blocks on an OS synchronization structure like a mutex, or the thread calls any of the functions `sleep`, *`vTaskDelay()`*, or `usleep`.

Note: If calling a standard libc or C++ sleep function, such as `usleep` defined in `unistd.h`, then the task will only block and yield the CPU if the sleep time is longer than *one FreeRTOS tick period*. If the time is shorter, the thread will busy-wait instead of yielding to another RTOS task.

By default all POSIX Threads have the same RTOS priority, but it is possible to change this by calling a *custom API*.

Standard features

The following standard APIs are implemented in ESP-IDF.

Refer to standard POSIX Threads documentation, or pthread.h, for details about the standard arguments and behaviour of each function. Differences or limitations compared to the standard APIs are noted below.

Thread APIs

- `pthread_create()` - The `attr` argument is supported for setting stack size and detach state only. Other attribute fields are ignored. - Unlike FreeRTOS task functions, the `start_routine` function is allowed to return. A "detached" type thread is automatically deleted if the function returns. The default "joinable" type thread will be suspended until pthread_join() is called on it.
- `pthread_join()`
- `pthread_detach()`
- `pthread_exit()`
- `sched_yield()`
- `pthread_self()` - An assert will fail if this function is called from a FreeRTOS task which is not a pthread.
- `pthread_equal()`

Thread Attributes

- `pthread_attr_init()`
- `pthread_attr_destroy()` - This function doesn't need to free any resources and instead resets the `attr` structure to defaults (implementation is same as `pthread_attr_init()`).
- `pthread_attr_getstacksize()` / `pthread_attr_setstacksize()`
- `pthread_attr_getdetachstate()` / `pthread_attr_setdetachstate()`

Once

- `pthread_once()`

Static initializer constant `PTHREAD_ONCE_INIT` is supported.

Note: This function can be called from tasks created using either pthread or FreeRTOS APIs

---

Mutexes POSIX Mutexes are implemented as FreeRTOS Mutex Semaphores (normal type for "fast" or "error check" mutexes, and Recursive type for "recursive" mutexes). This means that they have the same priority inheritance behaviour as mutexes created with `xSemaphoreCreateMutex()`.

- `pthread_mutex_init()`
- `pthread_mutex_destroy()`
- `pthread_mutex_lock()`
- `pthread_mutex_timedlock()`
- `pthread_mutex_trylock()`
- `pthread_mutex_unlock()`
- `pthread_mutexattr_init()`
- `pthread_mutexattr_destroy()`
- `pthread_mutexattr_gettype()` / `pthread_mutexattr_settype()`

Static initializer constant `PTHREAD_MUTEX_INITIALIZER` is supported, but the non-standard static initializer constants for other mutex types are not supported.

Note: These functions can be called from tasks created using either pthread or FreeRTOS APIs

---

Condition Variables

- `pthread_cond_init()` - The `attr` argument is not implemented and is ignored.
- `pthread_cond_destroy()`
- `pthread_cond_signal()`
- `pthread_cond_broadcast()`
- `pthread_cond_wait()`
- `pthread_cond_timedwait()`

Static initializer constant `PTHREAD_COND_INITIALIZER` is supported.

- The resolution of `pthread_cond_timedwait()` timeouts is the RTOS tick period (see *CONFIG_FREERTOS_HZ*). Timeouts may be delayed up to one tick period after the requested timeout.

Note: These functions can be called from tasks created using either pthread or FreeRTOS APIs

---

Read/Write Locks

- `pthread_rwlock_init()` - The `attr` argument is not implemented and is ignored.
- `pthread_rwlock_destroy()`
- `pthread_rwlock_rdlock()`
- `pthread_rwlock_wrlock()`
- `pthread_rwlock_unlock()`

Static initializer constant `PTHREAD_RWLOCK_INITIALIZER` is supported.

Note: These functions can be called from tasks created using either pthread or FreeRTOS APIs. Note also that the current pthread reader-writer-locks implementation is based on the condition variable API. The performance is not optimal when locking only for a minimal amount of time like e.g. accessing a simple variable. In these cases with minimal locking time, a simple mutex might be faster.

Thread-Specific Data

- `pthread_key_create()` - The `destr_function` argument is supported and will be called if a thread function exits normally, calls `pthread_exit()`, or if the underlying task is deleted directly using the FreeRTOS function *`vTaskDelete()`*.
- `pthread_key_delete()`
- `pthread_setspecific()` / `pthread_getspecific()`

Note: These functions can be called from tasks created using either pthread or FreeRTOS APIs

---

Note: There are other options for thread local storage in ESP-IDF, including options with higher performance. See *Thread Local Storage*.

Not Implemented

The `pthread.h` header is a standard header and includes additional APIs and features which are not implemented in ESP-IDF. These include:

- `pthread_cancel()` returns `ENOSYS` if called.
- `pthread_condattr_init()` returns `ENOSYS` if called.

Other POSIX Threads functions (not listed here) are not implemented and will produce either a compiler or a linker error if referenced from an ESP-IDF application. If you identify a useful API that you would like to see implemented in ESP-IDF, please open a *feature request on GitHub <https://github.com/espressif/esp-idf/issues>* with the details.

ESP-IDF Extensions

The API *esp_pthread_set_cfg()* defined in the esp_pthreads.h header offers custom extensions to control how subsequent calls to pthread_create() will behave. Currently the following configuration can be set:

- Default stack size of new threads, if not specified when calling pthread_create() (overrides *CONFIG_PTHREAD_TASK_STACK_SIZE_DEFAULT*).
- RTOS priority of new threads (overrides *CONFIG_PTHREAD_TASK_PRIO_DEFAULT*).
- Core affinity / core pinning of new threads (overrides *CONFIG_PTHREAD_TASK_CORE_DEFAULT*).
- FreeRTOS task name for new threads (overrides *CONFIG_PTHREAD_TASK_NAME_DEFAULT*)

This configuration is scoped to the calling thread (or FreeRTOS task), meaning that *esp_pthread_set_cfg()* can be called independently in different threads or tasks. If the inherit_cfg flag is set in the current configuration then any new thread created will inherit the creator's configuration (if that thread calls pthread_create() recursively), otherwise the new thread will have the default configuration.

Examples

- system/pthread demonstrates using the pthreads API to create threads
- cxx/pthread demonstrates using C++ Standard Library functions with threads

API Reference

Header File

- components/pthread/include/esp_pthread.h

Functions

esp_pthread_cfg_t **esp_pthread_get_default_config**(void)

Creates a default pthread configuration based on the values set via menuconfig.

Returns A default configuration structure.

esp_err_t **esp_pthread_set_cfg**(const *esp_pthread_cfg_t* *cfg)

Configure parameters for creating pthread.

This API allows you to configure how the subsequent pthread_create() call will behave. This call can be used to setup configuration parameters like stack size, priority, configuration inheritance etc.

If the 'inherit' flag in the configuration structure is enabled, then the same configuration is also inherited in the thread subtree.

Note: Passing non-NULL attributes to pthread_create() will override the stack_size parameter set using this API

Parameters **cfg** – The pthread config parameters

Returns

- ESP_OK if configuration was successfully set
- ESP_ERR_NO_MEM if out of memory
- ESP_ERR_INVALID_ARG if stack_size is less than PTHREAD_STACK_MIN

esp_err_t **esp_pthread_get_cfg**(*esp_pthread_cfg_t* *p)

Get current pthread creation configuration.

This will retrieve the current configuration that will be used for creating threads.

Parameters **p** – Pointer to the pthread config structure that will be updated with the currently configured parameters

Returns

- ESP_OK if the configuration was available
- ESP_ERR_NOT_FOUND if a configuration wasn't previously set

esp_err_t **esp_pthread_init**(void)

Initialize pthread library.

Structures

struct **esp_pthread_cfg_t**

pthread configuration structure that influences pthread creation

Public Members

size_t **stack_size**

The stack size of the pthread.

size_t **prio**

The thread's priority.

bool **inherit_cfg**

Inherit this configuration further.

const char ***thread_name**

The thread name.

int **pin_to_core**

The core id to pin the thread to. Has the same value range as xCoreId argument of xTaskCreatePinnedToCore.

Macros

PTHREAD_STACK_MIN

2.7.8 Event Loop Library

Overview

The event loop library allows components to declare events to which other components can register handlers – code which will execute when those events occur. This allows loosely coupled components to attach desired behavior to changes in state of other components without application involvement. For instance, a high level connection handling library may subscribe to events produced by the wifi subsystem directly and act on those events. This also simplifies event processing by serializing and deferring code execution to another context.

Using esp_event APIs

There are two objects of concern for users of this library: events and event loops.

Events are occurrences of note. For example, for WiFi, a successful connection to the access point may be an event. Events are referenced using a two part identifier which are discussed more *here*. Event loops are the vehicle by which events get posted by event sources and handled by event handler functions. These two appear prominently in the event loop library APIs.

Using this library roughly entails the following flow:

1. A user defines a function that should run when an event is posted to a loop. This function is referred to as the event handler. It should have the same signature as *esp_event_handler_t*.
2. An event loop is created using *esp_event_loop_create()*, which outputs a handle to the loop of type *esp_event_loop_handle_t*. Event loops created using this API are referred to as user event loops. There is, however, a special type of event loop called the default event loop which are discussed *here*.
3. Components register event handlers to the loop using *esp_event_handler_register_with()*. Handlers can be registered with multiple loops, more on that *here*.
4. Event sources post an event to the loop using *esp_event_post_to()*.
5. Components wanting to remove their handlers from being called can do so by unregistering from the loop using *esp_event_handler_unregister_with()*.
6. Event loops which are no longer needed can be deleted using *esp_event_loop_delete()*.

In code, the flow above may look like as follows:

```
// 1. Define the event handler
void run_on_event(void* handler_arg, esp_event_base_t base, int32_t id, void*␣
↪event_data)
{
    // Event handler logic
}

void app_main()
{
    // 2. A configuration structure of type esp_event_loop_args_t is needed to␣
↪specify the properties of the loop to be
    // created. A handle of type esp_event_loop_handle_t is obtained, which is␣
↪needed by the other APIs to reference the loop
    // to perform their operations on.
    esp_event_loop_args_t loop_args = {
        .queue_size = ...,
        .task_name = ...
        .task_priority = ...,
        .task_stack_size = ...,
        .task_core_id = ...
    };

    esp_event_loop_handle_t loop_handle;

    esp_event_loop_create(&loop_args, &loop_handle);

    // 3. Register event handler defined in (1). MY_EVENT_BASE and MY_EVENT_ID␣
↪specifies a hypothetical
    // event that handler run_on_event should execute on when it gets posted to␣
↪the loop.
    esp_event_handler_register_with(loop_handle, MY_EVENT_BASE, MY_EVENT_ID, run_
↪on_event, ...);

    ...

    // 4. Post events to the loop. This queues the event on the event loop. At␣
↪some point in time
    // the event loop executes the event handler registered to the posted event,␣
↪in this case run_on_event.
```

(continues on next page)

(continued from previous page)

```
    // For simplicity sake this example calls esp_event_post_to from app_main, but␣
↪posting can be done from
    // any other tasks (which is the more interesting use case).
    esp_event_post_to(loop_handle, MY_EVENT_BASE, MY_EVENT_ID, ...);

    ...

    // 5. Unregistering an unneeded handler
    esp_event_handler_unregister_with(loop_handle, MY_EVENT_BASE, MY_EVENT_ID, run_
↪on_event);

    ...

    // 6. Deleting an unneeded event loop
    esp_event_loop_delete(loop_handle);
}
```

Declaring and defining events

As mentioned previously, events consists of two-part identifers: the event base and the event ID. The event base identifies an independent group of events; the event ID identifies the event within that group. Think of the event base and event ID as a person's last name and first name, respectively. A last name identifies a family, and the first name identifies a person within that family.

The event loop library provides macros to declare and define the event base easily.

Event base declaration:

```
ESP_EVENT_DECLARE_BASE(EVENT_BASE)
```

Event base definition:

```
ESP_EVENT_DEFINE_BASE(EVENT_BASE)
```

Note: In IDF, the base identifiers for system events are uppercase and are postfixed with `_EVENT`. For example, the base for wifi events is declared and defined as `WIFI_EVENT`, the ethernet event base `ETHERNET_EVENT`, and so on. The purpose is to have event bases look like constants (although they are global variables considering the defintions of macros `ESP_EVENT_DECLARE_BASE` and `ESP_EVENT_DEFINE_BASE`).

For event ID's, declaring them as enumerations is recommended. Once again, for visibility, these are typically placed in public header files.

Event ID:

```
enum {
    EVENT_ID_1,
    EVENT_ID_2,
    EVENT_ID_3,
    ...
}
```

Default Event Loop

The default event loop is a special type of loop used for system events (WiFi events, for example). The handle for this loop is hidden from the user. The creation, deletion, handler registration/unregistration and posting of events is done through a variant of the APIs for user event loops. The table below enumerates those variants, and the user event loops equivalent.

User Event Loops	Default Event Loops
esp_event_loop_create()	*esp_event_loop_create_default()*
esp_event_loop_delete()	*esp_event_loop_delete_default()*
esp_event_handler_register_with()	*esp_event_handler_register()*
esp_event_handler_unregister_with()	*esp_event_handler_unregister()*
esp_event_post_to()	*esp_event_post()*

If you compare the signatures for both, they are mostly similar except the for the lack of loop handle specification for the default event loop APIs.

Other than the API difference and the special designation to which system events are posted to, there is no difference to how default event loops and user event loops behave. It is even possible for users to post their own events to the default event loop, should the user opt to not create their own loops to save memory.

Notes on Handler Registration

It is possible to register a single handler to multiple events individually, i.e. using multiple calls to *esp_event_handler_register_with()*. For those multiple calls, the specific event base and event ID can be specified with which the handler should execute.

However, in some cases it is desirable for a handler to execute on (1) all events that get posted to a loop or (2) all events of a particular base identifier. This is possible using the special event base identifier `ESP_EVENT_ANY_BASE` and special event ID `ESP_EVENT_ANY_ID`. These special identifiers may be passed as the event base and event ID arguments for *esp_event_handler_register_with()*.

Therefore, the valid arguments to *esp_event_handler_register_with()* are:

1. <event base>, <event ID> - handler executes when the event with base <event base> and event ID <event ID> gets posted to the loop
2. <event base>, ESP_EVENT_ANY_ID - handler executes when any event with base <event base> gets posted to the loop
3. ESP_EVENT_ANY_BASE, ESP_EVENT_ANY_ID - handler executes when any event gets posted to the loop

As an example, suppose the following handler registrations were performed:

```
esp_event_handler_register_with(loop_handle, MY_EVENT_BASE, MY_EVENT_ID, run_on_
↪event_1, ...);
esp_event_handler_register_with(loop_handle, MY_EVENT_BASE, ESP_EVENT_ANY_ID, run_
↪on_event_2, ...);
esp_event_handler_register_with(loop_handle, ESP_EVENT_ANY_BASE, ESP_EVENT_ANY_ID,␣
↪run_on_event_3, ...);
```

If the hypothetical event `MY_EVENT_BASE`, `MY_EVENT_ID` is posted, all three handlers `run_on_event_1`, `run_on_event_2`, and `run_on_event_3` would execute.

If the hypothetical event `MY_EVENT_BASE`, `MY_OTHER_EVENT_ID` is posted, only `run_on_event_2` and `run_on_event_3` would execute.

If the hypothetical event `MY_OTHER_EVENT_BASE`, `MY_OTHER_EVENT_ID` is posted, only `run_on_event_3` would execute.

Handler Registration and Handler Dispatch Order The general rule is that for handlers that match a certain posted event during dispatch, those which are registered first also gets executed first. The user can then control which handlers get executed first by registering them before other handlers, provided that all registrations are performed using a single task. If the user plans to take advantage of this behavior, caution must be exercised if there are multiple tasks registering handlers. While the 'first registered, first executed' behavior still holds true, the task which gets executed first will also get their handlers registered first. Handlers registered one after the other by a single task will still be dispatched in the order relative to each other, but if that task gets pre-empted in between registration by another task which also registers handlers; then during dispatch those handlers will also get executed in between.

Event loop profiling

A configuration option *CONFIG_ESP_EVENT_LOOP_PROFILING* can be enabled in order to activate statistics collection for all event loops created. The function `esp_event_dump()` can be used to output the collected statistics to a file stream. More details on the information included in the dump can be found in the `esp_event_dump()` API Reference.

Application Example

Examples on using the `esp_event` library can be found in system/esp_event. The examples cover event declaration, loop creation, handler registration and unregistration and event posting.

Other examples which also adopt esp_event library:

- NMEA Parser , which will decode the statements received from GPS.

API Reference

Header File

- components/esp_event/include/esp_event.h

Functions

esp_err_t **esp_event_loop_create**(const *esp_event_loop_args_t* *event_loop_args, *esp_event_loop_handle_t* *event_loop)

Create a new event loop.

Parameters
- **event_loop_args** –**[in]** configuration structure for the event loop to create
- **event_loop** –**[out]** handle to the created event loop

Returns
- ESP_OK: Success
- ESP_ERR_INVALID_ARG: event_loop_args or event_loop was NULL
- ESP_ERR_NO_MEM: Cannot allocate memory for event loops list
- ESP_FAIL: Failed to create task loop
- Others: Fail

esp_err_t **esp_event_loop_delete**(*esp_event_loop_handle_t* event_loop)

Delete an existing event loop.

Parameters **event_loop** –**[in]** event loop to delete, must not be NULL

Returns
- ESP_OK: Success
- Others: Fail

esp_err_t **esp_event_loop_create_default**(void)

Create default event loop.

Returns
- ESP_OK: Success
- ESP_ERR_NO_MEM: Cannot allocate memory for event loops list
- ESP_FAIL: Failed to create task loop
- Others: Fail

esp_err_t **esp_event_loop_delete_default**(void)

Delete the default event loop.

Returns
- ESP_OK: Success
- Others: Fail

esp_err_t **esp_event_loop_run** (*esp_event_loop_handle_t* event_loop, TickType_t ticks_to_run)

Dispatch events posted to an event loop.

This function is used to dispatch events posted to a loop with no dedicated task, i.e task name was set to NULL in event_loop_args argument during loop creation. This function includes an argument to limit the amount of time it runs, returning control to the caller when that time expires (or some time afterwards). There is no guarantee that a call to this function will exit at exactly the time of expiry. There is also no guarantee that events have been dispatched during the call, as the function might have spent all of the alloted time waiting on the event queue. Once an event has been unqueued, however, it is guaranteed to be dispatched. This guarantee contributes to not being able to exit exactly at time of expiry as (1) blocking on internal mutexes is necessary for dispatching the unqueued event, and (2) during dispatch of the unqueued event there is no way to control the time occupied by handler code execution. The guaranteed time of exit is therefore the alloted time + amount of time required to dispatch the last unqueued event.

In cases where waiting on the queue times out, ESP_OK is returned and not ESP_ERR_TIMEOUT, since it is normal behavior.

Note: encountering an unknown event that has been posted to the loop will only generate a warning, not an error.

Parameters

- **event_loop** –**[in]** event loop to dispatch posted events from, must not be NULL
- **ticks_to_run** –**[in]** number of ticks to run the loop

Returns

- ESP_OK: Success
- Others: Fail

esp_err_t **esp_event_handler_register** (*esp_event_base_t* event_base, int32_t event_id, *esp_event_handler_t* event_handler, void *event_handler_arg)

Register an event handler to the system event loop (legacy).

This function can be used to register a handler for either: (1) specific events, (2) all events of a certain event base, or (3) all events known by the system event loop.

- specific events: specify exact event_base and event_id
- all events of a certain base: specify exact event_base and use ESP_EVENT_ANY_ID as the event_id
- all events known by the loop: use ESP_EVENT_ANY_BASE for event_base and ESP_EVENT_ANY_ID as the event_id

Registering multiple handlers to events is possible. Registering a single handler to multiple events is also possible. However, registering the same handler to the same event multiple times would cause the previous registrations to be overwritten.

Note: This function is obsolete and will be deprecated soon, please use esp_event_handler_instance_register() instead.

Note: the event loop library does not maintain a copy of event_handler_arg, therefore the user should ensure that event_handler_arg still points to a valid location by the time the handler gets called

---

Parameters

- **event_base** –**[in]** the base id of the event to register the handler for
- **event_id** –**[in]** the id of the event to register the handler for

- **event_handler** –**[in]** the handler function which gets called when the event is dispatched
- **event_handler_arg** –**[in]** data, aside from event data, that is passed to the handler when it is called

Returns

- ESP_OK: Success
- ESP_ERR_NO_MEM: Cannot allocate memory for the handler
- ESP_ERR_INVALID_ARG: Invalid combination of event base and event id
- Others: Fail

esp_err_t **esp_event_handler_register_with**(*esp_event_loop_handle_t* event_loop, *esp_event_base_t* event_base, int32_t event_id, *esp_event_handler_t* event_handler, void *event_handler_arg)

Register an event handler to a specific loop (legacy).

This function behaves in the same manner as esp_event_handler_register, except the additional specification of the event loop to register the handler to.

Note: This function is obsolete and will be deprecated soon, please use esp_event_handler_instance_register_with() instead.

Note: the event loop library does not maintain a copy of event_handler_arg, therefore the user should ensure that event_handler_arg still points to a valid location by the time the handler gets called

---

Parameters

- **event_loop** –**[in]** the event loop to register this handler function to, must not be NULL
- **event_base** –**[in]** the base id of the event to register the handler for
- **event_id** –**[in]** the id of the event to register the handler for
- **event_handler** –**[in]** the handler function which gets called when the event is dispatched
- **event_handler_arg** –**[in]** data, aside from event data, that is passed to the handler when it is called

Returns

- ESP_OK: Success
- ESP_ERR_NO_MEM: Cannot allocate memory for the handler
- ESP_ERR_INVALID_ARG: Invalid combination of event base and event id
- Others: Fail

esp_err_t **esp_event_handler_instance_register_with**(*esp_event_loop_handle_t* event_loop, *esp_event_base_t* event_base, int32_t event_id, *esp_event_handler_t* event_handler, void *event_handler_arg, *esp_event_handler_instance_t* *instance)

Register an instance of event handler to a specific loop.

This function can be used to register a handler for either: (1) specific events, (2) all events of a certain event base, or (3) all events known by the system event loop.

- specific events: specify exact event_base and event_id
- all events of a certain base: specify exact event_base and use ESP_EVENT_ANY_ID as the event_id
- all events known by the loop: use ESP_EVENT_ANY_BASE for event_base and ESP_EVENT_ANY_ID as the event_id

Besides the error, the function returns an instance object as output parameter to identify each registration. This is necessary to remove (unregister) the registration before the event loop is deleted.

Registering multiple handlers to events, registering a single handler to multiple events as well as registering the same handler to the same event multiple times is possible. Each registration yields a distinct instance object which identifies it over the registration lifetime.

Note: the event loop library does not maintain a copy of event_handler_arg, therefore the user should ensure that event_handler_arg still points to a valid location by the time the handler gets called

---

Parameters

- **`event_loop`** –**[in]** the event loop to register this handler function to, must not be NULL
- **`event_base`** –**[in]** the base id of the event to register the handler for
- **`event_id`** –**[in]** the id of the event to register the handler for
- **`event_handler`** –**[in]** the handler function which gets called when the event is dispatched
- **`event_handler_arg`** –**[in]** data, aside from event data, that is passed to the handler when it is called
- **`instance`** –**[out]** An event handler instance object related to the registered event handler and data, can be NULL. This needs to be kept if the specific callback instance should be unregistered before deleting the whole event loop. Registering the same event handler multiple times is possible and yields distinct instance objects. The data can be the same for all registrations. If no unregistration is needed but the handler should be deleted when the event loop is deleted, instance can be NULL.

Returns

- ESP_OK: Success
- ESP_ERR_NO_MEM: Cannot allocate memory for the handler
- ESP_ERR_INVALID_ARG: Invalid combination of event base and event id or instance is NULL
- Others: Fail

esp_err_t **`esp_event_handler_instance_register`**(*esp_event_base_t* event_base, int32_t event_id, *esp_event_handler_t* event_handler, void *event_handler_arg, *esp_event_handler_instance_t* *instance)

Register an instance of event handler to the default loop.

This function does the same as esp_event_handler_instance_register_with, except that it registers the handler to the default event loop.

Note: the event loop library does not maintain a copy of event_handler_arg, therefore the user should ensure that event_handler_arg still points to a valid location by the time the handler gets called

---

Parameters

- **`event_base`** –**[in]** the base id of the event to register the handler for
- **`event_id`** –**[in]** the id of the event to register the handler for
- **`event_handler`** –**[in]** the handler function which gets called when the event is dispatched
- **`event_handler_arg`** –**[in]** data, aside from event data, that is passed to the handler when it is called
- **`instance`** –**[out]** An event handler instance object related to the registered event handler and data, can be NULL. This needs to be kept if the specific callback instance should be unregistered before deleting the whole event loop. Registering the same event handler multiple times is possible and yields distinct instance objects. The data can be the same for all registrations. If no unregistration is needed but the handler should be deleted when the event loop is deleted, instance can be NULL.

Returns

- ESP_OK: Success
- ESP_ERR_NO_MEM: Cannot allocate memory for the handler
- ESP_ERR_INVALID_ARG: Invalid combination of event base and event id or instance is NULL
- Others: Fail

esp_err_t **esp_event_handler_unregister**(*esp_event_base_t* event_base, int32_t event_id, *esp_event_handler_t* event_handler)

Unregister a handler with the system event loop (legacy).

Unregisters a handler so it will no longer be called during dispatch. Handlers can be unregistered for any combination of event_base and event_id which were previously registered. To unregister a handler, the event_base and event_id arguments must match exactly the arguments passed to esp_event_handler_register() when that handler was registered. Passing ESP_EVENT_ANY_BASE and/or ESP_EVENT_ANY_ID will only unregister handlers that were registered with the same wildcard arguments.

Note: This function is obsolete and will be deprecated soon, please use esp_event_handler_instance_unregister() instead.

Note: When using ESP_EVENT_ANY_ID, handlers registered to specific event IDs using the same base will not be unregistered. When using ESP_EVENT_ANY_BASE, events registered to specific bases will also not be unregistered. This avoids accidental unregistration of handlers registered by other users or components.

Parameters

- **event_base** –**[in]** the base of the event with which to unregister the handler
- **event_id** –**[in]** the id of the event with which to unregister the handler
- **event_handler** –**[in]** the handler to unregister

Returns ESP_OK success

Returns ESP_ERR_INVALID_ARG invalid combination of event base and event id

Returns others fail

esp_err_t **esp_event_handler_unregister_with**(*esp_event_loop_handle_t* event_loop, *esp_event_base_t* event_base, int32_t event_id, *esp_event_handler_t* event_handler)

Unregister a handler from a specific event loop (legacy).

This function behaves in the same manner as esp_event_handler_unregister, except the additional specification of the event loop to unregister the handler with.

Note: This function is obsolete and will be deprecated soon, please use esp_event_handler_instance_unregister_with() instead.

Parameters

- **event_loop** –**[in]** the event loop with which to unregister this handler function, must not be NULL
- **event_base** –**[in]** the base of the event with which to unregister the handler
- **event_id** –**[in]** the id of the event with which to unregister the handler
- **event_handler** –**[in]** the handler to unregister

Returns

- ESP_OK: Success

- ESP_ERR_INVALID_ARG: Invalid combination of event base and event id
- Others: Fail

esp_err_t **esp_event_handler_instance_unregister_with**(*esp_event_loop_handle_t* event_loop, *esp_event_base_t* event_base, int32_t event_id, *esp_event_handler_instance_t* instance)

Unregister a handler instance from a specific event loop.

Unregisters a handler instance so it will no longer be called during dispatch. Handler instances can be unregistered for any combination of event_base and event_id which were previously registered. To unregister a handler instance, the event_base and event_id arguments must match exactly the arguments passed to esp_event_handler_instance_register() when that handler instance was registered. Passing ESP_EVENT_ANY_BASE and/or ESP_EVENT_ANY_ID will only unregister handler instances that were registered with the same wildcard arguments.

Note: When using ESP_EVENT_ANY_ID, handlers registered to specific event IDs using the same base will not be unregistered. When using ESP_EVENT_ANY_BASE, events registered to specific bases will also not be unregistered. This avoids accidental unregistration of handlers registered by other users or components.

Parameters

- **event_loop** –**[in]** the event loop with which to unregister this handler function, must not be NULL
- **event_base** –**[in]** the base of the event with which to unregister the handler
- **event_id** –**[in]** the id of the event with which to unregister the handler
- **instance** –**[in]** the instance object of the registration to be unregistered

Returns

- ESP_OK: Success
- ESP_ERR_INVALID_ARG: Invalid combination of event base and event id
- Others: Fail

esp_err_t **esp_event_handler_instance_unregister**(*esp_event_base_t* event_base, int32_t event_id, *esp_event_handler_instance_t* instance)

Unregister a handler from the system event loop.

This function does the same as esp_event_handler_instance_unregister_with, except that it unregisters the handler instance from the default event loop.

Parameters

- **event_base** –**[in]** the base of the event with which to unregister the handler
- **event_id** –**[in]** the id of the event with which to unregister the handler
- **instance** –**[in]** the instance object of the registration to be unregistered

Returns

- ESP_OK: Success
- ESP_ERR_INVALID_ARG: Invalid combination of event base and event id
- Others: Fail

esp_err_t **esp_event_post**(*esp_event_base_t* event_base, int32_t event_id, void *event_data, size_t event_data_size, TickType_t ticks_to_wait)

Posts an event to the system default event loop. The event loop library keeps a copy of event_data and manages the copy's lifetime automatically (allocation + deletion); this ensures that the data the handler recieves is always valid.

Parameters

- **event_base** –**[in]** the event base that identifies the event
- **event_id** –**[in]** the event id that identifies the event
- **event_data** –**[in]** the data, specific to the event occurence, that gets passed to the handler

- **event_data_size** –**[in]** the size of the event data
- **ticks_to_wait** –**[in]** number of ticks to block on a full event queue

Returns

- ESP_OK: Success
- ESP_ERR_TIMEOUT: Time to wait for event queue to unblock expired, queue full when posting from ISR
- ESP_ERR_INVALID_ARG: Invalid combination of event base and event id
- Others: Fail

esp_err_t **esp_event_post_to**(*esp_event_loop_handle_t* event_loop, *esp_event_base_t* event_base, int32_t event_id, void *event_data, size_t event_data_size, TickType_t ticks_to_wait)

Posts an event to the specified event loop. The event loop library keeps a copy of event_data and manages the copy's lifetime automatically (allocation + deletion); this ensures that the data the handler recieves is always valid.

This function behaves in the same manner as esp_event_post_to, except the additional specification of the event loop to post the event to.

Parameters

- **event_loop** –**[in]** the event loop to post to, must not be NULL
- **event_base** –**[in]** the event base that identifies the event
- **event_id** –**[in]** the event id that identifies the event
- **event_data** –**[in]** the data, specific to the event occurence, that gets passed to the handler
- **event_data_size** –**[in]** the size of the event data
- **ticks_to_wait** –**[in]** number of ticks to block on a full event queue

Returns

- ESP_OK: Success
- ESP_ERR_TIMEOUT: Time to wait for event queue to unblock expired, queue full when posting from ISR
- ESP_ERR_INVALID_ARG: Invalid combination of event base and event id
- Others: Fail

esp_err_t **esp_event_isr_post**(*esp_event_base_t* event_base, int32_t event_id, void *event_data, size_t event_data_size, BaseType_t *task_unblocked)

Special variant of esp_event_post for posting events from interrupt handlers.

Note: this function is only available when CONFIG_ESP_EVENT_POST_FROM_ISR is enabled

---

Note: when this function is called from an interrupt handler placed in IRAM, this function should be placed in IRAM as well by enabling CONFIG_ESP_EVENT_POST_FROM_IRAM_ISR

Parameters

- **event_base** –**[in]** the event base that identifies the event
- **event_id** –**[in]** the event id that identifies the event
- **event_data** –**[in]** the data, specific to the event occurence, that gets passed to the handler
- **event_data_size** –**[in]** the size of the event data; max is 4 bytes
- **task_unblocked** –**[out]** an optional parameter (can be NULL) which indicates that an event task with higher priority than currently running task has been unblocked by the posted event; a context switch should be requested before the interrupt is existed.

Returns

- ESP_OK: Success
- ESP_FAIL: Event queue for the default event loop full
- ESP_ERR_INVALID_ARG: Invalid combination of event base and event id, data size of more than 4 bytes

- Others: Fail

esp_err_t **esp_event_isr_post_to**(*esp_event_loop_handle_t* event_loop, *esp_event_base_t* event_base, int32_t event_id, void *event_data, size_t event_data_size, BaseType_t *task_unblocked)

Special variant of esp_event_post_to for posting events from interrupt handlers.

Note: this function is only available when CONFIG_ESP_EVENT_POST_FROM_ISR is enabled

Note: when this function is called from an interrupt handler placed in IRAM, this function should be placed in IRAM as well by enabling CONFIG_ESP_EVENT_POST_FROM_IRAM_ISR

Parameters

- **event_loop** –**[in]** the event loop to post to, must not be NULL
- **event_base** –**[in]** the event base that identifies the event
- **event_id** –**[in]** the event id that identifies the event
- **event_data** –**[in]** the data, specific to the event occurence, that gets passed to the handler
- **event_data_size** –**[in]** the size of the event data
- **task_unblocked** –**[out]** an optional parameter (can be NULL) which indicates that an event task with higher priority than currently running task has been unblocked by the posted event; a context switch should be requested before the interrupt is existed.

Returns

- ESP_OK: Success
- ESP_FAIL: Event queue for the loop full
- ESP_ERR_INVALID_ARG: Invalid combination of event base and event id, data size of more than 4 bytes
- Others: Fail

esp_err_t **esp_event_dump**(FILE *file)

Dumps statistics of all event loops.

Dumps event loop info in the format:

```
     event loop
         handler
         handler
         ...
     event loop
         handler
         handler
         ...

where:

 event loop
     format: address,name rx:total_recieved dr:total_dropped
     where:
         address - memory address of the event loop
         name - name of the event loop, 'none' if no dedicated task
         total_recieved - number of successfully posted events
         total_dropped - number of events unsuccessfully posted due to queue␣
↪being full

 handler
```

(continues on next page)

(continued from previous page)

```
      format: address ev:base,id inv:total_invoked run:total_runtime
      where:
          address - address of the handler function
          base,id - the event specified by event base and id this handler␣
↪executes
          total_invoked - number of times this handler has been invoked
          total_runtime - total amount of time used for invoking this handler
```

Note: this function is a noop when CONFIG_ESP_EVENT_LOOP_PROFILING is disabled

Parameters **file** –**[in]** the file stream to output to

Returns

- ESP_OK: Success
- ESP_ERR_NO_MEM: Cannot allocate memory for event loops list
- Others: Fail

Structures

struct **esp_event_loop_args_t**

Configuration for creating event loops.

Public Members

int32_t **queue_size**

size of the event loop queue

const char ***task_name**

name of the event loop task; if NULL, a dedicated task is not created for event loop

UBaseType_t **task_priority**

priority of the event loop task, ignored if task name is NULL

uint32_t **task_stack_size**

stack size of the event loop task, ignored if task name is NULL

BaseType_t **task_core_id**

core to which the event loop task is pinned to, ignored if task name is NULL

Header File

- components/esp_event/include/esp_event_base.h

Macros

ESP_EVENT_DECLARE_BASE(id)

ESP_EVENT_DEFINE_BASE(id)

ESP_EVENT_ANY_BASE

register handler for any event base

ESP_EVENT_ANY_ID

register handler for any event id

Type Definitions

typedef const char ***esp_event_base_t**

unique pointer to a subsystem that exposes events

typedef void ***esp_event_loop_handle_t**

a number that identifies an event with respect to a base

typedef void (***esp_event_handler_t**)(void *event_handler_arg, *esp_event_base_t* event_base, int32_t event_id, void *event_data)

function called when an event is posted to the queue

typedef void ***esp_event_handler_instance_t**

context identifying an instance of a registered event handler

Related Documents

Legacy event loop

API Reference

Header File

- components/esp_event/include/esp_event_legacy.h

Functions

esp_err_t **esp_event_send**(*system_event_t* *event)

Send a event to event task.

Other task/modules, such as the tcpip_adapter, can call this API to send an event to event task

Note: This API is part of the legacy event system. New code should use event library API in esp_event.h

Parameters **event** –Event to send
Returns ESP_OK : succeed
Returns others : fail

esp_err_t **esp_event_send_internal**(*esp_event_base_t* event_base, int32_t event_id, void *event_data, size_t event_data_size, TickType_t ticks_to_wait)

Send a event to event task.

Other task/modules, such as the tcpip_adapter, can call this API to send an event to event task

Note: This API is used by WiFi Driver only.

Parameters
- **event_base** –**[in]** the event base that identifies the event
- **event_id** –**[in]** the event id that identifies the event
- **event_data** –**[in]** the data, specific to the event occurence, that gets passed to the handler
- **event_data_size** –**[in]** the size of the event data
- **ticks_to_wait** –**[in]** number of ticks to block on a full event queue

Returns ESP_OK : succeed
Returns others : fail

esp_err_t **esp_event_process_default** (*system_event_t* *event)

Default event handler for system events.

This function performs default handling of system events. When using esp_event_loop APIs, it is called automatically before invoking the user-provided callback function.

Applications which implement a custom event loop must call this function as part of event processing.

Note: This API is part of the legacy event system. New code should use event library API in esp_event.h

Parameters **event** –pointer to event to be handled
Returns ESP_OK if an event was handled successfully

void **esp_event_set_default_eth_handlers** (void)

Install default event handlers for Ethernet interface.

Note: This API is part of the legacy event system. New code should use event library API in esp_event.h

void **esp_event_set_default_wifi_handlers** (void)

Install default event handlers for Wi-Fi interfaces (station and AP)

Note: This API is part of the legacy event system. New code should use event library API in esp_event.h

esp_err_t **esp_event_loop_init** (*system_event_cb_t* cb, void *ctx)

Initialize event loop.

Create the event handler and task

Note: This API is part of the legacy event system. New code should use event library API in esp_event.h

Parameters
- **cb** –application specified event callback, it can be modified by call esp_event_set_cb
- **ctx** –reserved for user

Returns
- ESP_OK: succeed
- others: fail

system_event_cb_t **esp_event_loop_set_cb** (*system_event_cb_t* cb, void *ctx)

Set application specified event callback function.

Attention 1. If cb is NULL, means application don't need to handle If cb is not NULL, it will be call when an event is received, after the default event callback is completed

---

Note: This API is part of the legacy event system. New code should use event library API in esp_event.h

---

Parameters

- **cb** –application callback function
- **ctx** –argument to be passed to callback

Returns old callback

Unions

union **system_event_info_t**

#include <esp_event_legacy.h> Union of all possible system_event argument structures

Public Members

system_event_sta_connected_t **connected**

ESP32 station connected to AP

system_event_sta_disconnected_t **disconnected**

ESP32 station disconnected to AP

system_event_sta_scan_done_t **scan_done**

ESP32 station scan (APs) done

system_event_sta_authmode_change_t **auth_change**

the auth mode of AP ESP32 station connected to changed

system_event_sta_got_ip_t **got_ip**

ESP32 station got IP, first time got IP or when IP is changed

system_event_sta_wps_er_pin_t **sta_er_pin**

ESP32 station WPS enrollee mode PIN code received

system_event_sta_wps_fail_reason_t **sta_er_fail_reason**

ESP32 station WPS enrollee mode failed reason code received

system_event_sta_wps_er_success_t **sta_er_success**

ESP32 station WPS enrollee success

system_event_ap_staconnected_t **sta_connected**

a station connected to ESP32 soft-AP

system_event_ap_stadisconnected_t **sta_disconnected**

a station disconnected to ESP32 soft-AP

system_event_ap_probe_req_rx_t **ap_probereqrecved**

ESP32 soft-AP receive probe request packet

system_event_ftm_report_t **ftm_report**

Report of FTM procedure

system_event_ap_staipassigned_t **ap_staipassigned**

ESP32 soft-AP assign an IP to the station

system_event_got_ip6_t **got_ip6**

ESP32 station or ap or ethernet ipv6 addr state change to preferred

Structures

struct **system_event_t**

Event, as a tagged enum

Public Members

system_event_id_t **event_id**

event ID

system_event_info_t **event_info**

event information

Macros

SYSTEM_EVENT_AP_STA_GOT_IP6

Type Definitions

typedef *wifi_event_sta_wps_fail_reason_t* **system_event_sta_wps_fail_reason_t**

Argument structure of SYSTEM_EVENT_STA_WPS_ER_FAILED event

typedef *wifi_event_sta_scan_done_t* **system_event_sta_scan_done_t**

Argument structure of SYSTEM_EVENT_SCAN_DONE event

typedef *wifi_event_sta_connected_t* **system_event_sta_connected_t**

Argument structure of SYSTEM_EVENT_STA_CONNECTED event

typedef *wifi_event_sta_disconnected_t* **system_event_sta_disconnected_t**

Argument structure of SYSTEM_EVENT_STA_DISCONNECTED event

typedef *wifi_event_sta_authmode_change_t* **system_event_sta_authmode_change_t**

Argument structure of SYSTEM_EVENT_STA_AUTHMODE_CHANGE event

typedef *wifi_event_sta_wps_er_pin_t* **system_event_sta_wps_er_pin_t**

Argument structure of SYSTEM_EVENT_STA_WPS_ER_PIN event

typedef *wifi_event_sta_wps_er_success_t* **system_event_sta_wps_er_success_t**

Argument structure of SYSTEM_EVENT_STA_WPS_ER_PIN event

typedef *wifi_event_ap_staconnected_t* **system_event_ap_staconnected_t**

Argument structure of event

typedef *wifi_event_ap_stadisconnected_t* **system_event_ap_stadisconnected_t**

Argument structure of event

typedef *wifi_event_ap_probe_req_rx_t* **system_event_ap_probe_req_rx_t**

Argument structure of event

typedef *wifi_event_ftm_report_t* **system_event_ftm_report_t**

Argument structure of SYSTEM_EVENT_FTM_REPORT event

typedef ip_event_ap_staipassigned_t **system_event_ap_staipassigned_t**

Argument structure of event

typedef ip_event_got_ip_t **system_event_sta_got_ip_t**

Argument structure of event

typedef ip_event_got_ip6_t **system_event_got_ip6_t**

Argument structure of event

typedef *esp_err_t* (***system_event_handler_t**)(*esp_event_base_t* event_base, int32_t event_id, void *event_data, size_t event_data_size, TickType_t ticks_to_wait)

Event handler function type

typedef *esp_err_t* (***system_event_cb_t**)(void *ctx, *system_event_t* *event)

Application specified event callback function.

Note: This API is part of the legacy event system. New code should use event library API in esp_event.h

---

Param ctx reserved for user
Param event event type defined in this file
Return

- ESP_OK: succeed
- others: fail

Enumerations

enum **system_event_id_t**

System event types enumeration

Values:

enumerator **SYSTEM_EVENT_WIFI_READY**

ESP32 WiFi ready

enumerator **SYSTEM_EVENT_SCAN_DONE**

ESP32 finish scanning AP

enumerator **SYSTEM_EVENT_STA_START**
ESP32 station start

enumerator **SYSTEM_EVENT_STA_STOP**
ESP32 station stop

enumerator **SYSTEM_EVENT_STA_CONNECTED**
ESP32 station connected to AP

enumerator **SYSTEM_EVENT_STA_DISCONNECTED**
ESP32 station disconnected from AP

enumerator **SYSTEM_EVENT_STA_AUTHMODE_CHANGE**
the auth mode of AP connected by ESP32 station changed

enumerator **SYSTEM_EVENT_STA_GOT_IP**
ESP32 station got IP from connected AP

enumerator **SYSTEM_EVENT_STA_LOST_IP**
ESP32 station lost IP and the IP is reset to 0

enumerator **SYSTEM_EVENT_STA_BSS_RSSI_LOW**
ESP32 station connected BSS rssi goes below threshold

enumerator **SYSTEM_EVENT_STA_WPS_ER_SUCCESS**
ESP32 station wps succeeds in enrollee mode

enumerator **SYSTEM_EVENT_STA_WPS_ER_FAILED**
ESP32 station wps fails in enrollee mode

enumerator **SYSTEM_EVENT_STA_WPS_ER_TIMEOUT**
ESP32 station wps timeout in enrollee mode

enumerator **SYSTEM_EVENT_STA_WPS_ER_PIN**
ESP32 station wps pin code in enrollee mode

enumerator **SYSTEM_EVENT_STA_WPS_ER_PBC_OVERLAP**
ESP32 station wps overlap in enrollee mode

enumerator **SYSTEM_EVENT_AP_START**
ESP32 soft-AP start

enumerator **SYSTEM_EVENT_AP_STOP**
ESP32 soft-AP stop

enumerator **SYSTEM_EVENT_AP_STACONNECTED**
a station connected to ESP32 soft-AP

enumerator **SYSTEM_EVENT_AP_STADISCONNECTED**

a station disconnected from ESP32 soft-AP

enumerator **SYSTEM_EVENT_AP_STAIPASSIGNED**

ESP32 soft-AP assign an IP to a connected station

enumerator **SYSTEM_EVENT_AP_PROBEREQRECVED**

Receive probe request packet in soft-AP interface

enumerator **SYSTEM_EVENT_ACTION_TX_STATUS**

Receive status of Action frame transmitted

enumerator **SYSTEM_EVENT_ROC_DONE**

Indicates the completion of Remain-on-Channel operation status

enumerator **SYSTEM_EVENT_STA_BEACON_TIMEOUT**

ESP32 station beacon timeout

enumerator **SYSTEM_EVENT_FTM_REPORT**

Receive report of FTM procedure

enumerator **SYSTEM_EVENT_GOT_IP6**

ESP32 station or ap or ethernet interface v6IP addr is preferred

enumerator **SYSTEM_EVENT_ETH_START**

ESP32 ethernet start

enumerator **SYSTEM_EVENT_ETH_STOP**

ESP32 ethernet stop

enumerator **SYSTEM_EVENT_ETH_CONNECTED**

ESP32 ethernet phy link up

enumerator **SYSTEM_EVENT_ETH_DISCONNECTED**

ESP32 ethernet phy link down

enumerator **SYSTEM_EVENT_ETH_GOT_IP**

ESP32 ethernet got IP from connected AP

enumerator **SYSTEM_EVENT_ETH_LOST_IP**

ESP32 ethernet lost IP and the IP is reset to 0

enumerator **SYSTEM_EVENT_MAX**

Number of members in this enum

2.7.9 FreeRTOS

Overview

This section contains documentation of FreeRTOS types, functions, and macros. It is automatically generated from FreeRTOS header files.

Note: ESP-IDF FreeRTOS is based on Vanilla FreeRTOS v10.4.3

- For more information about the SMP changes of ESP-IDF FreeRTOS, see *ESP-IDF FreeRTOS (SMP)*
- For more information about the features added to ESP-IDF FreeRTOS, see *FreeRTOS Additions*.

Configuration

Vanilla FreeRTOS allows ports and applications to configure the kernel by adding various `#define config...` macros to `FreeRTOSConfig.h`. Through these macros, the kernel's scheduling behavior and various kernel features can be enabled or disabled. **However, in ESP-IDF FreeRTOS, the ``FreeRTOSConfig.h`` file is considered a private and must not be modified by users**. Any FreeRTOS configuration that is exposed to the user will be done so via menuconfig.

ESP-IDF FreeRTOS can be configured in the project configuration menu (`idf.py menuconfig`) under `Component Config/FreeRTOS`. The following section highlights some of the ESP-IDF FreeRTOS configuration options. For a full list of ESP-IDF FreeRTOS configurations, see *Project Configuration*

- *CONFIG_FREERTOS_UNICORE* will run ESP-IDF FreeRTOS only on CPU0. Note that this is **not equivalent to running Vanilla FreeRTOS**. Futhermore, this option may affect behavior of components other than freertos. For more details regarding the effects of running ESP-IDF FreeRTOS on a single core, refer to *ESP-IDF FreeRTOS Single Core*. Alternatively, users can also search for occurrences of `CONFIG_FREERTOS_UNICORE` in the ESP-IDF components.
- *CONFIG_FREERTOS_ASSERT_ON_UNTESTED_FUNCTION* will trigger a halt in functions in ESP-IDF FreeRTOS that have not been fully tested in an SMP context.
- *CONFIG_FREERTOS_TASK_FUNCTION_WRAPPER* will enclose all task functions within a wrapper function. In the case that a task function mistakenly returns (i.e. does not call *`vTaskDelete()`*), the call flow will return to the wrapper function. The wrapper function will then log an error and abort the application, as illustrated below:

```
E (25) FreeRTOS: FreeRTOS task should not return. Aborting now!
abort() was called at PC 0x40085c53 on core 0
```

ESP-IDF FreeRTOS Applications

Unlike Vanilla FreeRTOS, users must not call *`vTaskStartScheduler()`*. Instead, ESP-IDF FreeRTOS is started automatically. The entry point is a user defined `void app_main(void)` function.

- Typically, users would spawn the rest of their applications task from `app_main`.
- The `app_main` function is allowed to return at any point (i.e., before the application terminates).
- The `app_main` function is called from the `main` task.

The `main` task is one of multiple tasks that are automatically spawned by ESP-IDF during startup. These tasks are:

Table 14: List of Tasks Created During Startup

Task Name	Affinity	Priority	Description
Main Task (`main`)	CPU0	1	Task that simply calls `app_main`. This task will self delete when `app_main` returns
Idle Tasks (`IDLEx`)	CPU0 and CPU1	0	Idle tasks created for (and pinned to) each CPU
IPC Tasks (`ipcx`)	CPU0 and CPU1	24	IPC tasks created for (and pinned to) each CPU. IPC tasks are used to implement the IPC feature. See *Inter-Processor Call* for more details.

Task API

Header File

- components/freertos/include/freertos/task.h

Functions

BaseType_t **xTaskCreatePinnedToCore**(TaskFunction_t pvTaskCode, const char *const pcName, const uint32_t usStackDepth, void *const pvParameters, UBaseType_t uxPriority, *TaskHandle_t* *const pvCreatedTask, const BaseType_t xCoreID)

Create a new task with a specified affinity.

This function is similar to xTaskCreate, but allows setting task affinity in SMP system.

Parameters

- **pvTaskCode** –Pointer to the task entry function. Tasks must be implemented to never return (i.e. continuous loop), or should be terminated using vTaskDelete function.
- **pcName** –A descriptive name for the task. This is mainly used to facilitate debugging. Max length defined by configMAX_TASK_NAME_LEN - default is 16.
- **usStackDepth** –The size of the task stack specified as the number of bytes. Note that this differs from vanilla FreeRTOS.
- **pvParameters** –Pointer that will be used as the parameter for the task being created.
- **uxPriority** –The priority at which the task should run. Systems that include MPU support can optionally create tasks in a privileged (system) mode by setting bit portPRIVILEGE_BIT of the priority parameter. For example, to create a privileged task at priority 2 the uxPriority parameter should be set to (2 | portPRIVILEGE_BIT).
- **pvCreatedTask** –Used to pass back a handle by which the created task can be referenced.
- **xCoreID** –If the value is tskNO_AFFINITY, the created task is not pinned to any CPU, and the scheduler can run it on any core available. Values 0 or 1 indicate the index number of the CPU which the task should be pinned to. Specifying values larger than (portNUM_PROCESSORS - 1) will cause the function to fail.

Returns pdPASS if the task was successfully created and added to a ready list, otherwise an error code defined in the file projdefs.h

static inline BaseType_t **xTaskCreate**(TaskFunction_t pvTaskCode, const char *const pcName, const uint32_t usStackDepth, void *const pvParameters, UBaseType_t uxPriority, *TaskHandle_t* *const pxCreatedTask)

Create a new task and add it to the list of tasks that are ready to run.

Internally, within the FreeRTOS implementation, tasks use two blocks of memory. The first block is used to hold the task's data structures. The second block is used by the task as its stack. If a task is created using xTaskCreate() then both blocks of memory are automatically dynamically allocated inside the xTaskCreate() function. (see https://www.FreeRTOS.org/a00111.html). If a task is created using xTaskCreateStatic() then the application writer must provide the required memory. xTaskCreateStatic() therefore allows a task to be created without using any dynamic memory allocation.

See xTaskCreateStatic() for a version that does not use any dynamic memory allocation.

xTaskCreate() can only be used to create a task that has unrestricted access to the entire microcontroller memory map. Systems that include MPU support can alternatively create an MPU constrained task using xTaskCreateRestricted().

Example usage:

```
// Task to be created.
void vTaskCode( void * pvParameters )
{
  for( ;; )
  {
      // Task code goes here.
  }
}

// Function that creates a task.
void vOtherFunction( void )
{
static uint8_t ucParameterToPass;
TaskHandle_t xHandle = NULL;

  // Create the task, storing the handle.  Note that the passed parameter␣
↪ucParameterToPass
  // must exist for the lifetime of the task, so in this case is declared␣
↪static.  If it was just an
  // an automatic stack variable it might no longer exist, or at least have␣
↪been corrupted, by the time
  // the new task attempts to access it.
  xTaskCreate( vTaskCode, "NAME", STACK_SIZE, &ucParameterToPass, tskIDLE_
↪PRIORITY, &xHandle );
  configASSERT( xHandle );

  // Use the handle to delete the task.
  if( xHandle != NULL )
  {
     vTaskDelete( xHandle );
  }
}
```

Note: If program uses thread local variables (ones specified with "__thread" keyword) then storage for them will be allocated on the task's stack.

Parameters

- **pvTaskCode** –Pointer to the task entry function. Tasks must be implemented to never return (i.e. continuous loop), or should be terminated using vTaskDelete function.
- **pcName** –A descriptive name for the task. This is mainly used to facilitate debugging. Max length defined by configMAX_TASK_NAME_LEN - default is 16.
- **usStackDepth** –The size of the task stack specified as the number of bytes. Note that this differs from vanilla FreeRTOS.
- **pvParameters** –Pointer that will be used as the parameter for the task being created.
- **uxPriority** –The priority at which the task should run. Systems that include MPU support can optionally create tasks in a privileged (system) mode by setting bit portPRIVILEGE_BIT of the priority parameter. For example, to create a privileged task at priority 2 the uxPriority parameter should be set to (2 | portPRIVILEGE_BIT).
- **pxCreatedTask** –Used to pass back a handle by which the created task can be referenced.

Returns pdPASS if the task was successfully created and added to a ready list, otherwise an error code defined in the file projdefs.h

TaskHandle_t **xTaskCreateStaticPinnedToCore**(TaskFunction_t pvTaskCode, const char *const pcName, const uint32_t ulStackDepth, void *const pvParameters, UBaseType_t uxPriority, StackType_t *const pxStackBuffer, StaticTask_t *const pxTaskBuffer, const BaseType_t xCoreID)

Create a new task with a specified affinity.

This function is similar to xTaskCreateStatic, but allows specifying task affinity in an SMP system.

Parameters

- **pvTaskCode** –Pointer to the task entry function. Tasks must be implemented to never return (i.e. continuous loop), or should be terminated using vTaskDelete function.
- **pcName** –A descriptive name for the task. This is mainly used to facilitate debugging. The maximum length of the string is defined by configMAX_TASK_NAME_LEN in FreeRTOSConfig.h.
- **ulStackDepth** –The size of the task stack specified as the number of bytes. Note that this differs from vanilla FreeRTOS.
- **pvParameters** –Pointer that will be used as the parameter for the task being created.
- **uxPriority** –The priority at which the task will run.
- **pxStackBuffer** –Must point to a StackType_t array that has at least ulStackDepth indexes - the array will then be used as the task's stack, removing the need for the stack to be allocated dynamically.
- **pxTaskBuffer** –Must point to a variable of type StaticTask_t, which will then be used to hold the task's data structures, removing the need for the memory to be allocated dynamically.
- **xCoreID** –If the value is tskNO_AFFINITY, the created task is not pinned to any CPU, and the scheduler can run it on any core available. Values 0 or 1 indicate the index number of the CPU which the task should be pinned to. Specifying values larger than (portNUM_PROCESSORS - 1) will cause the function to fail.

Returns If neither pxStackBuffer or pxTaskBuffer are NULL, then the task will be created and pdPASS is returned. If either pxStackBuffer or pxTaskBuffer are NULL then the task will not be created and errCOULD_NOT_ALLOCATE_REQUIRED_MEMORY is returned.

static inline *TaskHandle_t* **xTaskCreateStatic**(TaskFunction_t pvTaskCode, const char *const pcName, const uint32_t ulStackDepth, void *const pvParameters, UBaseType_t uxPriority, StackType_t *const puxStackBuffer, StaticTask_t *const pxTaskBuffer)

Create a new task and add it to the list of tasks that are ready to run.

Internally, within the FreeRTOS implementation, tasks use two blocks of memory. The first block is used to hold the task's data structures. The second block is used by the task as its stack. If a task is created using xTaskCreate() then both blocks of memory are automatically dynamically allocated inside the xTaskCreate() function. (see http://www.freertos.org/a00111.html). If a task is created using xTaskCreateStatic() then the application writer must provide the required memory. xTaskCreateStatic() therefore allows a task to be created without using any dynamic memory allocation.

Example usage:

```
 // Dimensions the buffer that the task being created will use as its stack.
 // NOTE:  This is the number of bytes the stack will hold, not the number of
 // words as found in vanilla FreeRTOS.
#define STACK_SIZE 200

 // Structure that will hold the TCB of the task being created.
 StaticTask_t xTaskBuffer;
```

(continues on next page)

(continued from previous page)

```
// Buffer that the task being created will use as its stack.  Note this is
// an array of StackType_t variables.  The size of StackType_t is dependent on
// the RTOS port.
StackType_t xStack[ STACK_SIZE ];

// Function that implements the task being created.
void vTaskCode( void * pvParameters )
{
    // The parameter value is expected to be 1 as 1 is passed in the
    // pvParameters value in the call to xTaskCreateStatic().
    configASSERT( ( uint32_t ) pvParameters == 1UL );

    for( ;; )
    {
        // Task code goes here.
    }
}

// Function that creates a task.
void vOtherFunction( void )
{
    TaskHandle_t xHandle = NULL;

    // Create the task without using any dynamic memory allocation.
    xHandle = xTaskCreateStatic(
                  vTaskCode,       // Function that implements the task.
                  "NAME",          // Text name for the task.
                  STACK_SIZE,      // Stack size in bytes, not words.
                  ( void * ) 1,    // Parameter passed into the task.
                  tskIDLE_PRIORITY,// Priority at which the task is created.
                  xStack,          // Array to use as the task's stack.
                  &xTaskBuffer );  // Variable to hold the task's data␣
↪structure.

    // puxStackBuffer and pxTaskBuffer were not NULL, so the task will have
    // been created, and xHandle will be the task's handle.  Use the handle
    // to suspend the task.
    vTaskSuspend( xHandle );
}
```

Note: If program uses thread local variables (ones specified with "__thread" keyword) then storage for them will be allocated on the task's stack.

Parameters

- **pvTaskCode** –Pointer to the task entry function. Tasks must be implemented to never return (i.e. continuous loop), or should be terminated using vTaskDelete function.
- **pcName** –A descriptive name for the task. This is mainly used to facilitate debugging. The maximum length of the string is defined by configMAX_TASK_NAME_LEN in FreeRTOSConfig.h.
- **ulStackDepth** –The size of the task stack specified as the number of bytes. Note that this differs from vanilla FreeRTOS.
- **pvParameters** –Pointer that will be used as the parameter for the task being created.
- **uxPriority** –The priority at which the task will run.
- **puxStackBuffer** –Must point to a StackType_t array that has at least ulStackDepth indexes - the array will then be used as the task's stack, removing the need for the stack to be allocated dynamically.
- **pxTaskBuffer** –Must point to a variable of type StaticTask_t, which will then be used to hold the task's data structures, removing the need for the memory to be allocated

dynamically.

Returns If neither pxStackBuffer or pxTaskBuffer are NULL, then the task will be created and pdPASS is returned. If either pxStackBuffer or pxTaskBuffer are NULL then the task will not be created and errCOULD_NOT_ALLOCATE_REQUIRED_MEMORY is returned.

BaseType_t **xTaskCreateRestricted**(const TaskParameters_t *const pxTaskDefinition, *TaskHandle_t* *pxCreatedTask)

Only available when configSUPPORT_DYNAMIC_ALLOCATION is set to 1.

xTaskCreateRestricted() should only be used in systems that include an MPU implementation.

Create a new task and add it to the list of tasks that are ready to run. The function parameters define the memory regions and associated access permissions allocated to the task.

See xTaskCreateRestrictedStatic() for a version that does not use any dynamic memory allocation.

return pdPASS if the task was successfully created and added to a ready list, otherwise an error code defined in the file projdefs.h

Example usage:

```
// Create an TaskParameters_t structure that defines the task to be created.
static const TaskParameters_t xCheckTaskParameters =
{
 vATask,      // pvTaskCode - the function that implements the task.
 "ATask",     // pcName - just a text name for the task to assist debugging.
 100,         // usStackDepth - the stack size DEFINED IN WORDS.
 NULL,        // pvParameters - passed into the task function as the function␣
↪parameters.
 ( 1UL | portPRIVILEGE_BIT ),// uxPriority - task priority, set the␣
↪portPRIVILEGE_BIT if the task should run in a privileged state.
 cStackBuffer,// puxStackBuffer - the buffer to be used as the task stack.

 // xRegions - Allocate up to three separate memory regions for access by
 // the task, with appropriate access permissions.  Different processors have
 // different memory alignment requirements - refer to the FreeRTOS␣
↪documentation
 // for full information.
 {
     // Base address                 Length  Parameters
     { cReadWriteArray,              32,     portMPU_REGION_READ_WRITE },
     { cReadOnlyArray,               32,     portMPU_REGION_READ_ONLY },
     { cPrivilegedOnlyAccessArray,   128,    portMPU_REGION_PRIVILEGED_READ_
↪WRITE }
 }
};

int main( void )
{
TaskHandle_t xHandle;

 // Create a task from the const structure defined above.  The task handle
 // is requested (the second parameter is not NULL) but in this case just for
 // demonstration purposes as its not actually used.
 xTaskCreateRestricted( &xRegTest1Parameters, &xHandle );

 // Start the scheduler.
 vTaskStartScheduler();

 // Will only get here if there was insufficient memory to create the idle
 // and/or timer task.
```

(continues on next page)

(continued from previous page)

```
 for( ;; );
}
```

Parameters

- **pxTaskDefinition** –Pointer to a structure that contains a member for each of the normal xTaskCreate() parameters (see the xTaskCreate() API documentation) plus an optional stack buffer and the memory region definitions.
- **pxCreatedTask** –Used to pass back a handle by which the created task can be referenced.

BaseType_t **xTaskCreateRestrictedStatic**(const TaskParameters_t *const pxTaskDefinition, *TaskHandle_t* *pxCreatedTask)

Only available when configSUPPORT_STATIC_ALLOCATION is set to 1.

xTaskCreateRestrictedStatic() should only be used in systems that include an MPU implementation.

Internally, within the FreeRTOS implementation, tasks use two blocks of memory. The first block is used to hold the task's data structures. The second block is used by the task as its stack. If a task is created using xTaskCreateRestricted() then the stack is provided by the application writer, and the memory used to hold the task's data structure is automatically dynamically allocated inside the xTaskCreateRestricted() function. If a task is created using xTaskCreateRestrictedStatic() then the application writer must provide the memory used to hold the task's data structures too. xTaskCreateRestrictedStatic() therefore allows a memory protected task to be created without using any dynamic memory allocation.

return pdPASS if the task was successfully created and added to a ready list, otherwise an error code defined in the file projdefs.h

Example usage:

```
// Create an TaskParameters_t structure that defines the task to be created.
// The StaticTask_t variable is only included in the structure when
// configSUPPORT_STATIC_ALLOCATION is set to 1.  The PRIVILEGED_DATA macro can
// be used to force the variable into the RTOS kernel's privileged data area.
static PRIVILEGED_DATA StaticTask_t xTaskBuffer;
static const TaskParameters_t xCheckTaskParameters =
{
 vATask,      // pvTaskCode - the function that implements the task.
 "ATask",     // pcName - just a text name for the task to assist debugging.
  100,        // usStackDepth - the stack size DEFINED IN BYTES.
 NULL,        // pvParameters - passed into the task function as the function␣
↪parameters.
 ( 1UL | portPRIVILEGE_BIT ),// uxPriority - task priority, set the␣
↪portPRIVILEGE_BIT if the task should run in a privileged state.
 cStackBuffer,// puxStackBuffer - the buffer to be used as the task stack.

 // xRegions - Allocate up to three separate memory regions for access by
 // the task, with appropriate access permissions.  Different processors have
 // different memory alignment requirements - refer to the FreeRTOS␣
↪documentation
 // for full information.
 {
     // Base address                 Length  Parameters
     { cReadWriteArray,              32,     portMPU_REGION_READ_WRITE },
     { cReadOnlyArray,               32,     portMPU_REGION_READ_ONLY },
     { cPrivilegedOnlyAccessArray,   128,    portMPU_REGION_PRIVILEGED_READ_
↪WRITE }
 }

 &xTaskBuffer; // Holds the task's data structure.
```

(continues on next page)

(continued from previous page)

```
};

int main( void )
{
TaskHandle_t xHandle;

 // Create a task from the const structure defined above.  The task handle
 // is requested (the second parameter is not NULL) but in this case just for
 // demonstration purposes as its not actually used.
 xTaskCreateRestricted( &xRegTest1Parameters, &xHandle );

 // Start the scheduler.
 vTaskStartScheduler();

 // Will only get here if there was insufficient memory to create the idle
 // and/or timer task.
 for( ;; );
}
```

Parameters

- **pxTaskDefinition** –Pointer to a structure that contains a member for each of the normal xTaskCreate() parameters (see the xTaskCreate() API documentation) plus an optional stack buffer and the memory region definitions. If configSUPPORT_STATIC_ALLOCATION is set to 1 the structure contains an additional member, which is used to point to a variable of type StaticTask_t - which is then used to hold the task's data structure.
- **pxCreatedTask** –Used to pass back a handle by which the created task can be referenced.

void **vTaskAllocateMPURegions**(*TaskHandle_t* xTask, const MemoryRegion_t *const pxRegions)

Memory regions are assigned to a restricted task when the task is created by a call to xTaskCreateRestricted(). These regions can be redefined using vTaskAllocateMPURegions().

Example usage:

```
// Define an array of MemoryRegion_t structures that configures an MPU region
// allowing read/write access for 1024 bytes starting at the beginning of the
// ucOneKByte array.  The other two of the maximum 3 definable regions are
// unused so set to zero.
static const MemoryRegion_t xAltRegions[ portNUM_CONFIGURABLE_REGIONS ] =
{
 // Base address     Length      Parameters
 { ucOneKByte,       1024,       portMPU_REGION_READ_WRITE },
 { 0,                0,          0 },
 { 0,                0,          0 }
};

void vATask( void *pvParameters )
{
 // This task was created such that it has access to certain regions of
 // memory as defined by the MPU configuration.  At some point it is
 // desired that these MPU regions are replaced with that defined in the
 // xAltRegions const struct above.  Use a call to vTaskAllocateMPURegions()
 // for this purpose.  NULL is used as the task handle to indicate that this
 // function should modify the MPU regions of the calling task.
 vTaskAllocateMPURegions( NULL, xAltRegions );

 // Now the task can continue its function, but from this point on can only
```

(continues on next page)

(continued from previous page)

```
 // access its stack and the ucOneKByte array (unless any other statically
 // defined or shared regions have been declared elsewhere).
}
```

Parameters

- **xTask** –The handle of the task being updated.
- **pxRegions** –A pointer to an MemoryRegion_t structure that contains the new memory region definitions.

void **vTaskDelete**(*TaskHandle_t* xTaskToDelete)

INCLUDE_vTaskDelete must be defined as 1 for this function to be available. See the configuration section for more information.

Remove a task from the RTOS real time kernel's management. The task being deleted will be removed from all ready, blocked, suspended and event lists.

NOTE: The idle task is responsible for freeing the kernel allocated memory from tasks that have been deleted. It is therefore important that the idle task is not starved of microcontroller processing time if your application makes any calls to vTaskDelete (). Memory allocated by the task code is not automatically freed, and should be freed before the task is deleted.

See the demo application file death.c for sample code that utilises vTaskDelete ().

Example usage:

```
void vOtherFunction( void )
{
TaskHandle_t xHandle;

  // Create the task, storing the handle.
  xTaskCreate( vTaskCode, "NAME", STACK_SIZE, NULL, tskIDLE_PRIORITY, &xHandle␣
↪);

  // Use the handle to delete the task.
  vTaskDelete( xHandle );
}
```

Parameters **xTaskToDelete** –The handle of the task to be deleted. Passing NULL will cause the calling task to be deleted.

void **vTaskDelay**(const TickType_t xTicksToDelay)

Delay a task for a given number of ticks. The actual time that the task remains blocked depends on the tick rate. The constant portTICK_PERIOD_MS can be used to calculate real time from the tick rate - with the resolution of one tick period.

INCLUDE_vTaskDelay must be defined as 1 for this function to be available. See the configuration section for more information.

vTaskDelay() specifies a time at which the task wishes to unblock relative to the time at which vTaskDelay() is called. For example, specifying a block period of 100 ticks will cause the task to unblock 100 ticks after vTaskDelay() is called. vTaskDelay() does not therefore provide a good method of controlling the frequency of a periodic task as the path taken through the code, as well as other task and interrupt activity, will effect the frequency at which vTaskDelay() gets called and therefore the time at which the task next executes. See xTaskDelayUntil() for an alternative API function designed to facilitate fixed frequency execution. It does this by specifying an absolute time (rather than a relative time) at which the calling task should unblock.

Example usage:

```
void vTaskFunction( void * pvParameters )
{
// Block for 500ms.
const TickType_t xDelay = 500 / portTICK_PERIOD_MS;

  for( ;; )
  {
      // Simply toggle the LED every 500ms, blocking between each toggle.
      vToggleLED();
      vTaskDelay( xDelay );
  }
}
```

Parameters **xTicksToDelay** –The amount of time, in tick periods, that the calling task should block.

BaseType_t **xTaskDelayUntil**(TickType_t *const pxPreviousWakeTime, const TickType_t xTimeIncrement)

INCLUDE_xTaskDelayUntil must be defined as 1 for this function to be available. See the configuration section for more information.

Delay a task until a specified time. This function can be used by periodic tasks to ensure a constant execution frequency.

This function differs from vTaskDelay () in one important aspect: vTaskDelay () will cause a task to block for the specified number of ticks from the time vTaskDelay () is called. It is therefore difficult to use vTaskDelay () by itself to generate a fixed execution frequency as the time between a task starting to execute and that task calling vTaskDelay () may not be fixed [the task may take a different path though the code between calls, or may get interrupted or preempted a different number of times each time it executes].

Whereas vTaskDelay () specifies a wake time relative to the time at which the function is called, xTaskDelayUntil () specifies the absolute (exact) time at which it wishes to unblock.

The macro pdMS_TO_TICKS() can be used to calculate the number of ticks from a time specified in milliseconds with a resolution of one tick period.

Example usage:

```
// Perform an action every 10 ticks.
void vTaskFunction( void * pvParameters )
{
TickType_t xLastWakeTime;
const TickType_t xFrequency = 10;
BaseType_t xWasDelayed;

    // Initialise the xLastWakeTime variable with the current time.
    xLastWakeTime = xTaskGetTickCount ();
    for( ;; )
    {
        // Wait for the next cycle.
        xWasDelayed = xTaskDelayUntil( &xLastWakeTime, xFrequency );

        // Perform action here. xWasDelayed value can be used to determine
        // whether a deadline was missed if the code here took too long.
    }
}
```

Parameters

- **pxPreviousWakeTime** –Pointer to a variable that holds the time at which the task was last unblocked. The variable must be initialised with the current time prior to its first

use (see the example below). Following this the variable is automatically updated within xTaskDelayUntil ().

- **xTimeIncrement** –The cycle time period. The task will be unblocked at time *pxPreviousWakeTime + xTimeIncrement. Calling xTaskDelayUntil with the same xTimeIncrement parameter value will cause the task to execute with a fixed interface period.

Returns Value which can be used to check whether the task was actually delayed. Will be pdTRUE if the task way delayed and pdFALSE otherwise. A task will not be delayed if the next expected wake time is in the past.

BaseType_t **xTaskAbortDelay** (*TaskHandle_t* xTask)

INCLUDE_xTaskAbortDelay must be defined as 1 in FreeRTOSConfig.h for this function to be available.

A task will enter the Blocked state when it is waiting for an event. The event it is waiting for can be a temporal event (waiting for a time), such as when vTaskDelay() is called, or an event on an object, such as when xQueueReceive() or ulTaskNotifyTake() is called. If the handle of a task that is in the Blocked state is used in a call to xTaskAbortDelay() then the task will leave the Blocked state, and return from whichever function call placed the task into the Blocked state.

There is no 'FromISR' version of this function as an interrupt would need to know which object a task was blocked on in order to know which actions to take. For example, if the task was blocked on a queue the interrupt handler would then need to know if the queue was locked.

Parameters **xTask** –The handle of the task to remove from the Blocked state.

Returns If the task referenced by xTask was not in the Blocked state then pdFAIL is returned. Otherwise pdPASS is returned.

UBaseType_t **uxTaskPriorityGet** (const *TaskHandle_t* xTask)

INCLUDE_uxTaskPriorityGet must be defined as 1 for this function to be available. See the configuration section for more information.

Obtain the priority of any task.

Example usage:

```
void vAFunction( void )
{
TaskHandle_t xHandle;

  // Create a task, storing the handle.
  xTaskCreate( vTaskCode, "NAME", STACK_SIZE, NULL, tskIDLE_PRIORITY, &xHandle␣
↪);

  // ...

  // Use the handle to obtain the priority of the created task.
  // It was created with tskIDLE_PRIORITY, but may have changed
  // it itself.
  if( uxTaskPriorityGet( xHandle ) != tskIDLE_PRIORITY )
  {
      // The task has changed it's priority.
  }

  // ...

  // Is our priority higher than the created task?
  if( uxTaskPriorityGet( xHandle ) < uxTaskPriorityGet( NULL ) )
  {
      // Our priority (obtained using NULL handle) is higher.
  }
}
```

Parameters **xTask** –Handle of the task to be queried. Passing a NULL handle results in the priority of the calling task being returned.
Returns The priority of xTask.

UBaseType_t **uxTaskPriorityGetFromISR**(const *TaskHandle_t* xTask)

A version of uxTaskPriorityGet() that can be used from an ISR.

eTaskState **eTaskGetState**(*TaskHandle_t* xTask)

INCLUDE_eTaskGetState must be defined as 1 for this function to be available. See the configuration section for more information.

Obtain the state of any task. States are encoded by the eTaskState enumerated type.

Parameters **xTask** –Handle of the task to be queried.
Returns The state of xTask at the time the function was called. Note the state of the task might change between the function being called, and the functions return value being tested by the calling task.

void **vTaskGetInfo**(*TaskHandle_t* xTask, TaskStatus_t *pxTaskStatus, BaseType_t xGetFreeStackSpace, *eTaskState* eState)

configUSE_TRACE_FACILITY must be defined as 1 for this function to be available. See the configuration section for more information.

Populates a TaskStatus_t structure with information about a task.

Example usage:

```
void vAFunction( void )
{
TaskHandle_t xHandle;
TaskStatus_t xTaskDetails;

 // Obtain the handle of a task from its name.
 xHandle = xTaskGetHandle( "Task_Name" );

 // Check the handle is not NULL.
 configASSERT( xHandle );

 // Use the handle to obtain further information about the task.
 vTaskGetInfo( xHandle,
               &xTaskDetails,
               pdTRUE, // Include the high water mark in xTaskDetails.
               eInvalid ); // Include the task state in xTaskDetails.
}
```

Parameters

- **xTask** –Handle of the task being queried. If xTask is NULL then information will be returned about the calling task.
- **pxTaskStatus** –A pointer to the TaskStatus_t structure that will be filled with information about the task referenced by the handle passed using the xTask parameter.
- **xGetFreeStackSpace** –The TaskStatus_t structure contains a member to report the stack high water mark of the task being queried. Calculating the stack high water mark takes a relatively long time, and can make the system temporarily unresponsive - so the xGetFreeStackSpace parameter is provided to allow the high water mark checking to be skipped. The high watermark value will only be written to the TaskStatus_t structure if xGetFreeStackSpace is not set to pdFALSE;
- **eState** –The TaskStatus_t structure contains a member to report the state of the task being queried. Obtaining the task state is not as fast as a simple assignment - so the eState parameter is provided to allow the state information to be omitted from the TaskStatus_t

structure. To obtain state information then set eState to eInvalid - otherwise the value passed in eState will be reported as the task state in the TaskStatus_t structure.

void **vTaskPrioritySet**(*TaskHandle_t* xTask, UBaseType_t uxNewPriority)

INCLUDE_vTaskPrioritySet must be defined as 1 for this function to be available. See the configuration section for more information.

Set the priority of any task.

A context switch will occur before the function returns if the priority being set is higher than the currently executing task.

Example usage:

```
void vAFunction( void )
{
TaskHandle_t xHandle;

  // Create a task, storing the handle.
  xTaskCreate( vTaskCode, "NAME", STACK_SIZE, NULL, tskIDLE_PRIORITY, &xHandle
↪);

  // ...

  // Use the handle to raise the priority of the created task.
  vTaskPrioritySet( xHandle, tskIDLE_PRIORITY + 1 );

  // ...

  // Use a NULL handle to raise our priority to the same value.
  vTaskPrioritySet( NULL, tskIDLE_PRIORITY + 1 );
}
```

Parameters

- **xTask** –Handle to the task for which the priority is being set. Passing a NULL handle results in the priority of the calling task being set.
- **uxNewPriority** –The priority to which the task will be set.

void **vTaskSuspend**(*TaskHandle_t* xTaskToSuspend)

INCLUDE_vTaskSuspend must be defined as 1 for this function to be available. See the configuration section for more information.

Suspend any task. When suspended a task will never get any microcontroller processing time, no matter what its priority.

Calls to vTaskSuspend are not accumulative - i.e. calling vTaskSuspend () twice on the same task still only requires one call to vTaskResume () to ready the suspended task.

Example usage:

```
void vAFunction( void )
{
TaskHandle_t xHandle;

  // Create a task, storing the handle.
  xTaskCreate( vTaskCode, "NAME", STACK_SIZE, NULL, tskIDLE_PRIORITY, &xHandle
↪);

  // ...
```

(continues on next page)

(continued from previous page)

```
  // Use the handle to suspend the created task.
  vTaskSuspend( xHandle );

  // ...

  // The created task will not run during this period, unless
  // another task calls vTaskResume( xHandle ).

  //...


  // Suspend ourselves.
  vTaskSuspend( NULL );

  // We cannot get here unless another task calls vTaskResume
  // with our handle as the parameter.
}
```

Parameters **xTaskToSuspend** –Handle to the task being suspended. Passing a NULL handle will cause the calling task to be suspended.

void **vTaskResume**(*TaskHandle_t* xTaskToResume)

INCLUDE_vTaskSuspend must be defined as 1 for this function to be available. See the configuration section for more information.

Resumes a suspended task.

A task that has been suspended by one or more calls to vTaskSuspend () will be made available for running again by a single call to vTaskResume ().

Example usage:

```
void vAFunction( void )
{
TaskHandle_t xHandle;

  // Create a task, storing the handle.
  xTaskCreate( vTaskCode, "NAME", STACK_SIZE, NULL, tskIDLE_PRIORITY, &xHandle␣
↪);

  // ...

  // Use the handle to suspend the created task.
  vTaskSuspend( xHandle );

  // ...

  // The created task will not run during this period, unless
  // another task calls vTaskResume( xHandle ).

  //...


  // Resume the suspended task ourselves.
  vTaskResume( xHandle );

  // The created task will once again get microcontroller processing
  // time in accordance with its priority within the system.
}
```

Parameters **xTaskToResume** –Handle to the task being readied.

BaseType_t **xTaskResumeFromISR** (*TaskHandle_t* xTaskToResume)

INCLUDE_xTaskResumeFromISR must be defined as 1 for this function to be available. See the configuration section for more information.

An implementation of vTaskResume() that can be called from within an ISR.

A task that has been suspended by one or more calls to vTaskSuspend () will be made available for running again by a single call to xTaskResumeFromISR ().

xTaskResumeFromISR() should not be used to synchronise a task with an interrupt if there is a chance that the interrupt could arrive prior to the task being suspended - as this can lead to interrupts being missed. Use of a semaphore as a synchronisation mechanism would avoid this eventuality.

Parameters **xTaskToResume** –Handle to the task being readied.

Returns pdTRUE if resuming the task should result in a context switch, otherwise pdFALSE. This is used by the ISR to determine if a context switch may be required following the ISR.

void **vTaskStartScheduler** (void)

Starts the real time kernel tick processing. After calling the kernel has control over which tasks are executed and when.

NOTE: In ESP-IDF the scheduler is started automatically during application startup, vTaskStartScheduler() should not be called from ESP-IDF applications.

See the demo application file main.c for an example of creating tasks and starting the kernel.

Example usage:

```
void vAFunction( void )
{
  // Create at least one task before starting the kernel.
  xTaskCreate( vTaskCode, "NAME", STACK_SIZE, NULL, tskIDLE_PRIORITY, NULL );

  // Start the real time kernel with preemption.
  vTaskStartScheduler ();

  // Will not get here unless a task calls vTaskEndScheduler ()
}
```

void **vTaskEndScheduler** (void)

NOTE: At the time of writing only the x86 real mode port, which runs on a PC in place of DOS, implements this function.

Stops the real time kernel tick. All created tasks will be automatically deleted and multitasking (either preemptive or cooperative) will stop. Execution then resumes from the point where vTaskStartScheduler () was called, as if vTaskStartScheduler () had just returned.

See the demo application file main. c in the demo/PC directory for an example that uses vTaskEndScheduler ().

vTaskEndScheduler () requires an exit function to be defined within the portable layer (see vPortEndScheduler () in port. c for the PC port). This performs hardware specific operations such as stopping the kernel tick.

vTaskEndScheduler () will cause all of the resources allocated by the kernel to be freed - but will not free resources allocated by application tasks.

Example usage:

```
void vTaskCode( void * pvParameters )
{
  for( ;; )
  {
      // Task code goes here.
```

(continues on next page)

(continued from previous page)

```
      // At some point we want to end the real time kernel processing
      // so call ...
      vTaskEndScheduler ();
  }
}

void vAFunction( void )
{
  // Create at least one task before starting the kernel.
  xTaskCreate( vTaskCode, "NAME", STACK_SIZE, NULL, tskIDLE_PRIORITY, NULL );

  // Start the real time kernel with preemption.
  vTaskStartScheduler ();

  // Will only get here when the vTaskCode () task has called
  // vTaskEndScheduler ().  When we get here we are back to single task
  // execution.
}
```

void **vTaskSuspendAll** (void)

Suspends the scheduler without disabling interrupts. Context switches will not occur while the scheduler is suspended.

After calling vTaskSuspendAll () the calling task will continue to execute without risk of being swapped out until a call to xTaskResumeAll () has been made.

API functions that have the potential to cause a context switch (for example, vTaskDelayUntil(), xQueueSend(), etc.) must not be called while the scheduler is suspended.

Example usage:

```
void vTask1( void * pvParameters )
{
  for( ;; )
  {
      // Task code goes here.

      // ...

      // At some point the task wants to perform a long operation during
      // which it does not want to get swapped out.  It cannot use
      // taskENTER_CRITICAL ()/taskEXIT_CRITICAL () as the length of the
      // operation may cause interrupts to be missed - including the
      // ticks.

      // Prevent the real time kernel swapping out the task.
      vTaskSuspendAll ();

      // Perform the operation here.  There is no need to use critical
      // sections as we have all the microcontroller processing time.
      // During this time interrupts will still operate and the kernel
      // tick count will be maintained.

      // ...

      // The operation is complete.  Restart the kernel.
      xTaskResumeAll ();
  }
}
```

BaseType_t **xTaskResumeAll** (void)

Resumes scheduler activity after it was suspended by a call to vTaskSuspendAll().

xTaskResumeAll() only resumes the scheduler. It does not unsuspend tasks that were previously suspended by a call to vTaskSuspend().

Example usage:

```
void vTask1( void * pvParameters )
{
  for( ;; )
  {
      // Task code goes here.

      // ...

      // At some point the task wants to perform a long operation during
      // which it does not want to get swapped out.  It cannot use
      // taskENTER_CRITICAL ()/taskEXIT_CRITICAL () as the length of the
      // operation may cause interrupts to be missed - including the
      // ticks.

      // Prevent the real time kernel swapping out the task.
      vTaskSuspendAll ();

      // Perform the operation here.  There is no need to use critical
      // sections as we have all the microcontroller processing time.
      // During this time interrupts will still operate and the real
      // time kernel tick count will be maintained.

      // ...

      // The operation is complete.  Restart the kernel.  We want to force
      // a context switch - but there is no point if resuming the scheduler
      // caused a context switch already.
      if( !xTaskResumeAll () )
      {
           taskYIELD ();
      }
  }
}
```

Returns If resuming the scheduler caused a context switch then pdTRUE is returned, otherwise pdFALSE is returned.

TickType_t **xTaskGetTickCount** (void)

Returns The count of ticks since vTaskStartScheduler was called.

TickType_t **xTaskGetTickCountFromISR** (void)

This is a version of xTaskGetTickCount() that is safe to be called from an ISR - provided that TickType_t is the natural word size of the microcontroller being used or interrupt nesting is either not supported or not being used.

Returns The count of ticks since vTaskStartScheduler was called.

UBaseType_t **uxTaskGetNumberOfTasks** (void)

Returns The number of tasks that the real time kernel is currently managing. This includes all ready, blocked and suspended tasks. A task that has been deleted but not yet freed by the idle task will also be included in the count.

char *`pcTaskGetName` (*TaskHandle_t* xTaskToQuery)

Returns The text (human readable) name of the task referenced by the handle xTaskToQuery. A task can query its own name by either passing in its own handle, or by setting xTaskToQuery to NULL.

TaskHandle_t `xTaskGetHandle` (const char *pcNameToQuery)

NOTE: This function takes a relatively long time to complete and should be used sparingly.

Returns The handle of the task that has the human readable name pcNameToQuery. NULL is returned if no matching name is found. INCLUDE_xTaskGetHandle must be set to 1 in FreeRTOSConfig.h for pcTaskGetHandle() to be available.

UBaseType_t `uxTaskGetStackHighWaterMark` (*TaskHandle_t* xTask)

Returns the high water mark of the stack associated with xTask.

INCLUDE_uxTaskGetStackHighWaterMark must be set to 1 in FreeRTOSConfig.h for this function to be available.

Returns the high water mark of the stack associated with xTask. That is, the minimum free stack space there has been (in bytes not words, unlike vanilla FreeRTOS) since the task started. The smaller the returned number the closer the task has come to overflowing its stack.

uxTaskGetStackHighWaterMark() and uxTaskGetStackHighWaterMark2() are the same except for their return type. Using configSTACK_DEPTH_TYPE allows the user to determine the return type. It gets around the problem of the value overflowing on 8-bit types without breaking backward compatibility for applications that expect an 8-bit return type.

Parameters `xTask` –Handle of the task associated with the stack to be checked. Set xTask to NULL to check the stack of the calling task.

Returns The smallest amount of free stack space there has been (in bytes not words, unlike vanilla FreeRTOS) since the task referenced by xTask was created.

configSTACK_DEPTH_TYPE `uxTaskGetStackHighWaterMark2` (*TaskHandle_t* xTask)

Returns the start of the stack associated with xTask.

INCLUDE_uxTaskGetStackHighWaterMark2 must be set to 1 in FreeRTOSConfig.h for this function to be available.

Returns the high water mark of the stack associated with xTask. That is, the minimum free stack space there has been (in words, so on a 32 bit machine a value of 1 means 4 bytes) since the task started. The smaller the returned number the closer the task has come to overflowing its stack.

uxTaskGetStackHighWaterMark() and uxTaskGetStackHighWaterMark2() are the same except for their return type. Using configSTACK_DEPTH_TYPE allows the user to determine the return type. It gets around the problem of the value overflowing on 8-bit types without breaking backward compatibility for applications that expect an 8-bit return type.

Parameters `xTask` –Handle of the task associated with the stack to be checked. Set xTask to NULL to check the stack of the calling task.

Returns The smallest amount of free stack space there has been (in words, so actual spaces on the stack rather than bytes) since the task referenced by xTask was created.

uint8_t *`pxTaskGetStackStart` (*TaskHandle_t* xTask)

Returns the start of the stack associated with xTask.

INCLUDE_pxTaskGetStackStart must be set to 1 in FreeRTOSConfig.h for this function to be available.

Returns the lowest stack memory address, regardless of whether the stack grows up or down.

Parameters `xTask` –Handle of the task associated with the stack returned. Set xTask to NULL to return the stack of the calling task.

Returns A pointer to the start of the stack.

void **vTaskSetApplicationTaskTag**(*TaskHandle_t* xTask, *TaskHookFunction_t* pxHookFunction)

Sets pxHookFunction to be the task hook function used by the task xTask.

Parameters

- **xTask** –Handle of the task to set the hook function for Passing xTask as NULL has the effect of setting the calling tasks hook function.
- **pxHookFunction** –Pointer to the hook function.

TaskHookFunction_t **xTaskGetApplicationTaskTag**(*TaskHandle_t* xTask)

Returns the pxHookFunction value assigned to the task xTask. Do not call from an interrupt service routine - call xTaskGetApplicationTaskTagFromISR() instead.

TaskHookFunction_t **xTaskGetApplicationTaskTagFromISR**(*TaskHandle_t* xTask)

Returns the pxHookFunction value assigned to the task xTask. Can be called from an interrupt service routine.

void **vTaskSetThreadLocalStoragePointer**(*TaskHandle_t* xTaskToSet, BaseType_t xIndex, void *pvValue)

Set local storage pointer specific to the given task.

Each task contains an array of pointers that is dimensioned by the configNUM_THREAD_LOCAL_STORAGE_POINTERS setting in FreeRTOSConfig.h. The kernel does not use the pointers itself, so the application writer can use the pointers for any purpose they wish.

Parameters

- **xTaskToSet** –Task to set thread local storage pointer for
- **xIndex** –The index of the pointer to set, from 0 to configNUM_THREAD_LOCAL_STORAGE_POINTERS - 1.
- **pvValue** –Pointer value to set.

void ***pvTaskGetThreadLocalStoragePointer**(*TaskHandle_t* xTaskToQuery, BaseType_t xIndex)

Get local storage pointer specific to the given task.

Each task contains an array of pointers that is dimensioned by the configNUM_THREAD_LOCAL_STORAGE_POINTERS setting in FreeRTOSConfig.h. The kernel does not use the pointers itself, so the application writer can use the pointers for any purpose they wish.

Parameters

- **xTaskToQuery** –Task to get thread local storage pointer for
- **xIndex** –The index of the pointer to get, from 0 to configNUM_THREAD_LOCAL_STORAGE_POINTERS - 1.

Returns Pointer value

void **vTaskSetThreadLocalStoragePointerAndDelCallback**(*TaskHandle_t* xTaskToSet, BaseType_t xIndex, void *pvValue, *TlsDeleteCallbackFunction_t* pvDelCallback)

Set local storage pointer and deletion callback.

Each task contains an array of pointers that is dimensioned by the configNUM_THREAD_LOCAL_STORAGE_POINTERS setting in FreeRTOSConfig.h. The kernel does not use the pointers itself, so the application writer can use the pointers for any purpose they wish.

Local storage pointers set for a task can reference dynamically allocated resources. This function is similar to vTaskSetThreadLocalStoragePointer, but provides a way to release these resources when the task gets deleted. For each pointer, a callback function can be set. This function will be called when task is deleted, with the local storage pointer index and value as arguments.

Parameters

- **xTaskToSet** –Task to set thread local storage pointer for
- **xIndex** –The index of the pointer to set, from 0 to configNUM_THREAD_LOCAL_STORAGE_POINTERS - 1.
- **pvValue** –Pointer value to set.

- **pvDelCallback** –Function to call to dispose of the local storage pointer when the task is deleted.

void **vApplicationGetIdleTaskMemory**(StaticTask_t **ppxIdleTaskTCBBuffer, StackType_t **ppxIdleTaskStackBuffer, uint32_t *pulIdleTaskStackSize)

This function is used to provide a statically allocated block of memory to FreeRTOS to hold the Idle Task TCB. This function is required when configSUPPORT_STATIC_ALLOCATION is set. For more information see this URI: https://www.FreeRTOS.org/a00110.html#configSUPPORT_STATIC_ALLOCATION

Parameters

- **ppxIdleTaskTCBBuffer** –A handle to a statically allocated TCB buffer
- **ppxIdleTaskStackBuffer** –A handle to a statically allocated Stack buffer for thie idle task
- **pulIdleTaskStackSize** –A pointer to the number of elements that will fit in the allocated stack buffer

BaseType_t **xTaskCallApplicationTaskHook**(*TaskHandle_t* xTask, void *pvParameter)

Calls the hook function associated with xTask. Passing xTask as NULL has the effect of calling the Running tasks (the calling task) hook function.

Parameters

- **xTask** –Handle of the task to call the hook for.
- **pvParameter** –Parameter passed to the hook function for the task to interpret as it wants. The return value is the value returned by the task hook function registered by the user.

TaskHandle_t **xTaskGetIdleTaskHandle**(void)

xTaskGetIdleTaskHandle() is only available if INCLUDE_xTaskGetIdleTaskHandle is set to 1 in FreeRTOSConfig.h.

Simply returns the handle of the idle task. It is not valid to call xTaskGetIdleTaskHandle() before the scheduler has been started.

UBaseType_t **uxTaskGetSystemState**(TaskStatus_t *const pxTaskStatusArray, const UBaseType_t uxArraySize, uint32_t *const pulTotalRunTime)

configUSE_TRACE_FACILITY must be defined as 1 in FreeRTOSConfig.h for uxTaskGetSystemState() to be available.

uxTaskGetSystemState() populates an TaskStatus_t structure for each task in the system. TaskStatus_t structures contain, among other things, members for the task handle, task name, task priority, task state, and total amount of run time consumed by the task. See the TaskStatus_t structure definition in this file for the full member list.

NOTE: This function is intended for debugging use only as its use results in the scheduler remaining suspended for an extended period.

Example usage:

```
// This example demonstrates how a human readable table of run time stats
// information is generated from raw data provided by uxTaskGetSystemState().
// The human readable table is written to pcWriteBuffer
void vTaskGetRunTimeStats( char *pcWriteBuffer )
{
TaskStatus_t *pxTaskStatusArray;
volatile UBaseType_t uxArraySize, x;
uint32_t ulTotalRunTime, ulStatsAsPercentage;

    // Make sure the write buffer does not contain a string.
*pcWriteBuffer = 0x00;

    // Take a snapshot of the number of tasks in case it changes while this
```

(continues on next page)

(continued from previous page)

```
    // function is executing.
    uxArraySize = uxTaskGetNumberOfTasks();

    // Allocate a TaskStatus_t structure for each task.  An array could be
    // allocated statically at compile time.
    pxTaskStatusArray = pvPortMalloc( uxArraySize * sizeof( TaskStatus_t ) );

    if( pxTaskStatusArray != NULL )
    {
        // Generate raw status information about each task.
        uxArraySize = uxTaskGetSystemState( pxTaskStatusArray, uxArraySize, &
↪ulTotalRunTime );

        // For percentage calculations.
        ulTotalRunTime /= 100UL;

        // Avoid divide by zero errors.
        if( ulTotalRunTime > 0 )
        {
            // For each populated position in the pxTaskStatusArray array,
            // format the raw data as human readable ASCII data
            for( x = 0; x < uxArraySize; x++ )
            {
                // What percentage of the total run time has the task used?
                // This will always be rounded down to the nearest integer.
                // ulTotalRunTimeDiv100 has already been divided by 100.
                ulStatsAsPercentage = pxTaskStatusArray[ x ].ulRunTimeCounter␣
↪/ ulTotalRunTime;

                if( ulStatsAsPercentage > 0UL )
                {
                    sprintf( pcWriteBuffer, "%s\t\t%lu\t\t%lu%%\r\n",␣
↪pxTaskStatusArray[ x ].pcTaskName, pxTaskStatusArray[ x ].ulRunTimeCounter,␣
↪ulStatsAsPercentage );
                }
                else
                {
                    // If the percentage is zero here then the task has
                    // consumed less than 1% of the total run time.
                    sprintf( pcWriteBuffer, "%s\t\t%lu\t\t<1%%\r\n",␣
↪pxTaskStatusArray[ x ].pcTaskName, pxTaskStatusArray[ x ].ulRunTimeCounter );
                }

                pcWriteBuffer += strlen( ( char * ) pcWriteBuffer );
            }
        }

        // The array is no longer needed, free the memory it consumes.
        vPortFree( pxTaskStatusArray );
    }
}
```

Parameters

- **`pxTaskStatusArray`** –A pointer to an array of TaskStatus_t structures. The array must contain at least one TaskStatus_t structure for each task that is under the control of the RTOS. The number of tasks under the control of the RTOS can be determined using the uxTaskGetNumberOfTasks() API function.
- **`uxArraySize`** –The size of the array pointed to by the pxTaskStatusArray parameter. The size is specified as the number of indexes in the array, or the number of TaskStatus_t structures contained in the array, not by the number of bytes in the array.
- **`pulTotalRunTime`** –If configGENERATE_RUN_TIME_STATS is set to 1 in FreeR-

TOSConfig.h then *pulTotalRunTime is set by uxTaskGetSystemState() to the total run time (as defined by the run time stats clock, see https://www.FreeRTOS.org/rtos-run-time-stats.html) since the target booted. pulTotalRunTime can be set to NULL to omit the total run time information.

Returns The number of TaskStatus_t structures that were populated by uxTaskGetSystemState(). This should equal the number returned by the uxTaskGetNumberOfTasks() API function, but will be zero if the value passed in the uxArraySize parameter was too small.

void **vTaskList**(char *pcWriteBuffer)

List all the current tasks.

configUSE_TRACE_FACILITY and configUSE_STATS_FORMATTING_FUNCTIONS must both be defined as 1 for this function to be available. See the configuration section of the FreeRTOS.org website for more information.

NOTE 1: This function will disable interrupts for its duration. It is not intended for normal application runtime use but as a debug aid.

Lists all the current tasks, along with their current state and stack usage high water mark.

Tasks are reported as blocked ('B'), ready ('R'), deleted ('D') or suspended ('S').

PLEASE NOTE:

This function is provided for convenience only, and is used by many of the demo applications. Do not consider it to be part of the scheduler.

vTaskList() calls uxTaskGetSystemState(), then formats part of the uxTaskGetSystemState() output into a human readable table that displays task names, states and stack usage.

vTaskList() has a dependency on the sprintf() C library function that might bloat the code size, use a lot of stack, and provide different results on different platforms. An alternative, tiny, third party, and limited functionality implementation of sprintf() is provided in many of the FreeRTOS/Demo sub-directories in a file called printf-stdarg.c (note printf-stdarg.c does not provide a full snprintf() implementation!).

It is recommended that production systems call uxTaskGetSystemState() directly to get access to raw stats data, rather than indirectly through a call to vTaskList().

Parameters **pcWriteBuffer** –A buffer into which the above mentioned details will be written, in ASCII form. This buffer is assumed to be large enough to contain the generated report. Approximately 40 bytes per task should be sufficient.

void **vTaskGetRunTimeStats**(char *pcWriteBuffer)

Get the state of running tasks as a string

configGENERATE_RUN_TIME_STATS and configUSE_STATS_FORMATTING_FUNCTIONS must both be defined as 1 for this function to be available. The application must also then provide definitions for portCONFIGURE_TIMER_FOR_RUN_TIME_STATS() and portGET_RUN_TIME_COUNTER_VALUE() to configure a peripheral timer/counter and return the timers current count value respectively. The counter should be at least 10 times the frequency of the tick count.

NOTE 1: This function will disable interrupts for its duration. It is not intended for normal application runtime use but as a debug aid.

Setting configGENERATE_RUN_TIME_STATS to 1 will result in a total accumulated execution time being stored for each task. The resolution of the accumulated time value depends on the frequency of the timer configured by the portCONFIGURE_TIMER_FOR_RUN_TIME_STATS() macro. Calling vTaskGetRunTimeStats() writes the total execution time of each task into a buffer, both as an absolute count value and as a percentage of the total system execution time.

NOTE 2:

This function is provided for convenience only, and is used by many of the demo applications. Do not consider it to be part of the scheduler.

vTaskGetRunTimeStats() calls uxTaskGetSystemState(), then formats part of the uxTaskGetSystemState() output into a human readable table that displays the amount of time each task has spent in the Running state in both absolute and percentage terms.

vTaskGetRunTimeStats() has a dependency on the sprintf() C library function that might bloat the code size, use a lot of stack, and provide different results on different platforms. An alternative, tiny, third party, and limited functionality implementation of sprintf() is provided in many of the FreeRTOS/Demo sub-directories in a file called printf-stdarg.c (note printf-stdarg.c does not provide a full snprintf() implementation!).

It is recommended that production systems call uxTaskGetSystemState() directly to get access to raw stats data, rather than indirectly through a call to vTaskGetRunTimeStats().

Parameters **`pcWriteBuffer`** – A buffer into which the execution times will be written, in ASCII form. This buffer is assumed to be large enough to contain the generated report. Approximately 40 bytes per task should be sufficient.

uint32_t **`ulTaskGetIdleRunTimeCounter`**(void)

configGENERATE_RUN_TIME_STATS and configUSE_STATS_FORMATTING_FUNCTIONS must both be defined as 1 for this function to be available. The application must also then provide definitions for portCONFIGURE_TIMER_FOR_RUN_TIME_STATS() and portGET_RUN_TIME_COUNTER_VALUE() to configure a peripheral timer/counter and return the timers current count value respectively. The counter should be at least 10 times the frequency of the tick count.

Setting configGENERATE_RUN_TIME_STATS to 1 will result in a total accumulated execution time being stored for each task. The resolution of the accumulated time value depends on the frequency of the timer configured by the portCONFIGURE_TIMER_FOR_RUN_TIME_STATS() macro. While uxTaskGetSystemState() and vTaskGetRunTimeStats() writes the total execution time of each task into a buffer, ulTaskGetIdleRunTimeCounter() returns the total execution time of just the idle task.

Returns The total run time of the idle task. This is the amount of time the idle task has actually been executing. The unit of time is dependent on the frequency configured using the portCONFIGURE_TIMER_FOR_RUN_TIME_STATS() and portGET_RUN_TIME_COUNTER_VALUE() macros.

BaseType_t **`xTaskGenericNotify`**(*TaskHandle_t* xTaskToNotify, UBaseType_t uxIndexToNotify, uint32_t ulValue, *eNotifyAction* eAction, uint32_t *pulPreviousNotificationValue)

See https://www.FreeRTOS.org/RTOS-task-notifications.html for details.

configUSE_TASK_NOTIFICATIONS must be undefined or defined as 1 for these functions to be available.

Sends a direct to task notification to a task, with an optional value and action.

Each task has a private array of "notification values" (or 'notifications'), each of which is a 32-bit unsigned integer (uint32_t). The constant configTASK_NOTIFICATION_ARRAY_ENTRIES sets the number of indexes in the array, and (for backward compatibility) defaults to 1 if left undefined. Prior to FreeRTOS V10.4.0 there was only one notification value per task.

Events can be sent to a task using an intermediary object. Examples of such objects are queues, semaphores, mutexes and event groups. Task notifications are a method of sending an event directly to a task without the need for such an intermediary object.

A notification sent to a task can optionally perform an action, such as update, overwrite or increment one of the task's notification values. In that way task notifications can be used to send data to a task, or be used as light weight and fast binary or counting semaphores.

A task can use xTaskNotifyWaitIndexed() to [optionally] block to wait for a notification to be pending, or ulTaskNotifyTakeIndexed() to [optionally] block to wait for a notification value to have a non-zero value. The task does not consume any CPU time while it is in the Blocked state.

A notification sent to a task will remain pending until it is cleared by the task calling xTaskNotifyWaitIndexed() or ulTaskNotifyTakeIndexed() (or their un-indexed equivalents). If the task was already in the Blocked state to wait for a notification when the notification arrives then the task will automatically be removed from the Blocked state (unblocked) and the notification cleared.

NOTE Each notification within the array operates independently - a task can only block on one notification within the array at a time and will not be unblocked by a notification sent to any other array index.

Backward compatibility information: Prior to FreeRTOS V10.4.0 each task had a single "notification value", and all task notification API functions operated on that value. Replacing the single notification value with an array of notification values necessitated a new set of API functions that could address specific notifications within the array. xTaskNotify() is the original API function, and remains backward compatible by always operating on the notification value at index 0 in the array. Calling xTaskNotify() is equivalent to calling xTaskNotifyIndexed() with the uxIndexToNotify parameter set to 0.

eSetBits - The target notification value is bitwise ORed with ulValue. xTaskNotifyIndexed() always returns pdPASS in this case.

eIncrement - The target notification value is incremented. ulValue is not used and xTaskNotifyIndexed() always returns pdPASS in this case.

eSetValueWithOverwrite - The target notification value is set to the value of ulValue, even if the task being notified had not yet processed the previous notification at the same array index (the task already had a notification pending at that index). xTaskNotifyIndexed() always returns pdPASS in this case.

eSetValueWithoutOverwrite - If the task being notified did not already have a notification pending at the same array index then the target notification value is set to ulValue and xTaskNotifyIndexed() will return pdPASS. If the task being notified already had a notification pending at the same array index then no action is performed and pdFAIL is returned.

eNoAction - The task receives a notification at the specified array index without the notification value at that index being updated. ulValue is not used and xTaskNotifyIndexed() always returns pdPASS in this case.

Parameters

- **`xTaskToNotify`** –The handle of the task being notified. The handle to a task can be returned from the xTaskCreate() API function used to create the task, and the handle of the currently running task can be obtained by calling xTaskGetCurrentTaskHandle().
- **`uxIndexToNotify`** –The index within the target task's array of notification values to which the notification is to be sent. uxIndexToNotify must be less than configTASK_NOTIFICATION_ARRAY_ENTRIES. xTaskNotify() does not have this parameter and always sends notifications to index 0.
- **`ulValue`** –Data that can be sent with the notification. How the data is used depends on the value of the eAction parameter.
- **`eAction`** –Specifies how the notification updates the task's notification value, if at all. Valid values for eAction are as follows:
- **`pulPreviousNotificationValue`** –- Can be used to pass out the subject task's notification value before any bits are modified by the notify function.

Returns Dependent on the value of eAction. See the description of the eAction parameter.

BaseType_t **`xTaskGenericNotifyFromISR`**(*TaskHandle_t* xTaskToNotify, UBaseType_t uxIndexToNotify, uint32_t ulValue, *eNotifyAction* eAction, uint32_t *pulPreviousNotificationValue, BaseType_t *pxHigherPriorityTaskWoken)

See https://www.FreeRTOS.org/RTOS-task-notifications.html for details.

configUSE_TASK_NOTIFICATIONS must be undefined or defined as 1 for these functions to be available.

A version of xTaskNotifyIndexed() that can be used from an interrupt service routine (ISR).

Each task has a private array of "notification values" (or 'notifications'), each of which is a 32-bit unsigned integer (uint32_t). The constant configTASK_NOTIFICATION_ARRAY_ENTRIES sets the number of indexes in the array, and (for backward compatibility) defaults to 1 if left undefined. Prior to FreeRTOS V10.4.0 there was only one notification value per task.

Events can be sent to a task using an intermediary object. Examples of such objects are queues, semaphores, mutexes and event groups. Task notifications are a method of sending an event directly to a task without the need for such an intermediary object.

A notification sent to a task can optionally perform an action, such as update, overwrite or increment one of the task's notification values. In that way task notifications can be used to send data to a task, or be used as light weight and fast binary or counting semaphores.

A task can use xTaskNotifyWaitIndexed() to [optionally] block to wait for a notification to be pending, or ulTaskNotifyTakeIndexed() to [optionally] block to wait for a notification value to have a non-zero value. The task does not consume any CPU time while it is in the Blocked state.

A notification sent to a task will remain pending until it is cleared by the task calling xTaskNotifyWaitIndexed() or ulTaskNotifyTakeIndexed() (or their un-indexed equivalents). If the task was already in the Blocked state to wait for a notification when the notification arrives then the task will automatically be removed from the Blocked state (unblocked) and the notification cleared.

NOTE Each notification within the array operates independently - a task can only block on one notification within the array at a time and will not be unblocked by a notification sent to any other array index.

Backward compatibility information: Prior to FreeRTOS V10.4.0 each task had a single "notification value", and all task notification API functions operated on that value. Replacing the single notification value with an array of notification values necessitated a new set of API functions that could address specific notifications within the array. xTaskNotifyFromISR() is the original API function, and remains backward compatible by always operating on the notification value at index 0 within the array. Calling xTaskNotifyFromISR() is equivalent to calling xTaskNotifyIndexedFromISR() with the uxIndexToNotify parameter set to 0.

eSetBits - The task's notification value is bitwise ORed with ulValue. xTaskNotify() always returns pdPASS in this case.

eIncrement - The task's notification value is incremented. ulValue is not used and xTaskNotify() always returns pdPASS in this case.

eSetValueWithOverwrite - The task's notification value is set to the value of ulValue, even if the task being notified had not yet processed the previous notification (the task already had a notification pending). xTaskNotify() always returns pdPASS in this case.

eSetValueWithoutOverwrite - If the task being notified did not already have a notification pending then the task's notification value is set to ulValue and xTaskNotify() will return pdPASS. If the task being notified already had a notification pending then no action is performed and pdFAIL is returned.

eNoAction - The task receives a notification without its notification value being updated. ulValue is not used and xTaskNotify() always returns pdPASS in this case.

Parameters

- **`uxIndexToNotify`** –The index within the target task's array of notification values to which the notification is to be sent. uxIndexToNotify must be less than configTASK_NOTIFICATION_ARRAY_ENTRIES. xTaskNotifyFromISR() does not have this parameter and always sends notifications to index 0.
- **`xTaskToNotify`** –The handle of the task being notified. The handle to a task can be returned from the xTaskCreate() API function used to create the task, and the handle of the currently running task can be obtained by calling xTaskGetCurrentTaskHandle().
- **`ulValue`** –Data that can be sent with the notification. How the data is used depends on the value of the eAction parameter.
- **`eAction`** –Specifies how the notification updates the task's notification value, if at all. Valid values for eAction are as follows:
- **`pxHigherPriorityTaskWoken`** –xTaskNotifyFromISR() will set *pxHigherPriorityTaskWoken to pdTRUE if sending the notification caused the task to which the notification was sent to leave the Blocked state, and the unblocked task has a priority higher than the currently running task. If xTaskNotifyFromISR() sets this value to pdTRUE then a context switch should be requested before the interrupt is exited. How a context switch is requested from an ISR is dependent on the port - see the documentation page for the port in use.
- **`pulPreviousNotificationValue`** –- Can be used to pass out the subject task's notification value before any bits are modified by the notify function.

Returns Dependent on the value of eAction. See the description of the eAction parameter.

BaseType_t **xTaskGenericNotifyWait**(UBaseType_t uxIndexToWaitOn, uint32_t ulBitsToClearOnEntry, uint32_t ulBitsToClearOnExit, uint32_t *pulNotificationValue, TickType_t xTicksToWait)

Waits for a direct to task notification to be pending at a given index within an array of direct to task notifications.

See https://www.FreeRTOS.org/RTOS-task-notifications.html for details.

configUSE_TASK_NOTIFICATIONS must be undefined or defined as 1 for this function to be available.

Each task has a private array of "notification values" (or 'notifications'), each of which is a 32-bit unsigned integer (uint32_t). The constant configTASK_NOTIFICATION_ARRAY_ENTRIES sets the number of indexes in the array, and (for backward compatibility) defaults to 1 if left undefined. Prior to FreeRTOS V10.4.0 there was only one notification value per task.

Events can be sent to a task using an intermediary object. Examples of such objects are queues, semaphores, mutexes and event groups. Task notifications are a method of sending an event directly to a task without the need for such an intermediary object.

A notification sent to a task can optionally perform an action, such as update, overwrite or increment one of the task's notification values. In that way task notifications can be used to send data to a task, or be used as light weight and fast binary or counting semaphores.

A notification sent to a task will remain pending until it is cleared by the task calling xTaskNotifyWaitIndexed() or ulTaskNotifyTakeIndexed() (or their un-indexed equivalents). If the task was already in the Blocked state to wait for a notification when the notification arrives then the task will automatically be removed from the Blocked state (unblocked) and the notification cleared.

A task can use xTaskNotifyWaitIndexed() to [optionally] block to wait for a notification to be pending, or ulTaskNotifyTakeIndexed() to [optionally] block to wait for a notification value to have a non-zero value. The task does not consume any CPU time while it is in the Blocked state.

NOTE Each notification within the array operates independently - a task can only block on one notification within the array at a time and will not be unblocked by a notification sent to any other array index.

Backward compatibility information: Prior to FreeRTOS V10.4.0 each task had a single "notification value", and all task notification API functions operated on that value. Replacing the single notification value with an array of notification values necessitated a new set of API functions that could address specific notifications within the array. xTaskNotifyWait() is the original API function, and remains backward compatible by always operating on the notification value at index 0 in the array. Calling xTaskNotifyWait() is equivalent to calling xTaskNotifyWaitIndexed() with the uxIndexToWaitOn parameter set to 0.

Parameters

- **uxIndexToWaitOn** –The index within the calling task's array of notification values on which the calling task will wait for a notification to be received. uxIndexToWaitOn must be less than configTASK_NOTIFICATION_ARRAY_ENTRIES. xTaskNotifyWait() does not have this parameter and always waits for notifications on index 0.
- **ulBitsToClearOnEntry** –Bits that are set in ulBitsToClearOnEntry value will be cleared in the calling task's notification value before the task is marked as waiting for a new notification (provided a notification is not already pending). Optionally blocks if no notifications are pending. Setting ulBitsToClearOnEntry to ULONG_MAX (if limits.h is included) or 0xffffffffUL (if limits.h is not included) will have the effect of resetting the task's notification value to 0. Setting ulBitsToClearOnEntry to 0 will leave the task's notification value unchanged.
- **ulBitsToClearOnExit** –If a notification is pending or received before the calling task exits the xTaskNotifyWait() function then the task's notification value (see the xTaskNotify() API function) is passed out using the pulNotificationValue parameter. Then any bits that are set in ulBitsToClearOnExit will be cleared in the task's notification value (note *pulNotificationValue is set before any bits are cleared). Setting ulBitsToClearOnExit to ULONG_MAX (if limits.h is included) or 0xffffffffUL (if limits.h is not included) will have the effect of resetting the task's notification value to 0 before the function exits. Setting ulBitsToClearOnExit to 0 will leave the task's notification value unchanged when the function exits (in which case the value passed out in pulNotificationValue will match the task's notification value).

- **pulNotificationValue** –Used to pass the task's notification value out of the function. Note the value passed out will not be effected by the clearing of any bits caused by ulBitsToClearOnExit being non-zero.
- **xTicksToWait** –The maximum amount of time that the task should wait in the Blocked state for a notification to be received, should a notification not already be pending when xTaskNotifyWait() was called. The task will not consume any processing time while it is in the Blocked state. This is specified in kernel ticks, the macro pdMS_TO_TICKS(value_in_ms) can be used to convert a time specified in milliseconds to a time specified in ticks.

Returns If a notification was received (including notifications that were already pending when xTaskNotifyWait was called) then pdPASS is returned. Otherwise pdFAIL is returned.

void **vTaskGenericNotifyGiveFromISR**(*TaskHandle_t* xTaskToNotify, UBaseType_t uxIndexToNotify, BaseType_t *pxHigherPriorityTaskWoken)

A version of xTaskNotifyGiveIndexed() that can be called from an interrupt service routine (ISR).

See https://www.FreeRTOS.org/RTOS-task-notifications.html for more details.

configUSE_TASK_NOTIFICATIONS must be undefined or defined as 1 for this macro to be available.

Each task has a private array of "notification values" (or 'notifications'), each of which is a 32-bit unsigned integer (uint32_t). The constant configTASK_NOTIFICATION_ARRAY_ENTRIES sets the number of indexes in the array, and (for backward compatibility) defaults to 1 if left undefined. Prior to FreeRTOS V10.4.0 there was only one notification value per task.

Events can be sent to a task using an intermediary object. Examples of such objects are queues, semaphores, mutexes and event groups. Task notifications are a method of sending an event directly to a task without the need for such an intermediary object.

A notification sent to a task can optionally perform an action, such as update, overwrite or increment one of the task's notification values. In that way task notifications can be used to send data to a task, or be used as light weight and fast binary or counting semaphores.

vTaskNotifyGiveIndexedFromISR() is intended for use when task notifications are used as light weight and faster binary or counting semaphore equivalents. Actual FreeRTOS semaphores are given from an ISR using the xSemaphoreGiveFromISR() API function, the equivalent action that instead uses a task notification is vTaskNotifyGiveIndexedFromISR().

When task notifications are being used as a binary or counting semaphore equivalent then the task being notified should wait for the notification using the ulTaskNotificationTakeIndexed() API function rather than the xTaskNotifyWaitIndexed() API function.

NOTE Each notification within the array operates independently - a task can only block on one notification within the array at a time and will not be unblocked by a notification sent to any other array index.

Backward compatibility information: Prior to FreeRTOS V10.4.0 each task had a single "notification value", and all task notification API functions operated on that value. Replacing the single notification value with an array of notification values necessitated a new set of API functions that could address specific notifications within the array. xTaskNotifyFromISR() is the original API function, and remains backward compatible by always operating on the notification value at index 0 within the array. Calling xTaskNotifyGiveFromISR() is equivalent to calling xTaskNotifyGiveIndexedFromISR() with the uxIndexToNotify parameter set to 0.

Parameters

- **xTaskToNotify** –The handle of the task being notified. The handle to a task can be returned from the xTaskCreate() API function used to create the task, and the handle of the currently running task can be obtained by calling xTaskGetCurrentTaskHandle().
- **uxIndexToNotify** –The index within the target task's array of notification values to which the notification is to be sent. uxIndexToNotify must be less than configTASK_NOTIFICATION_ARRAY_ENTRIES. xTaskNotifyGiveFromISR() does not have this parameter and always sends notifications to index 0.
- **pxHigherPriorityTaskWoken** –vTaskNotifyGiveFromISR() will set *pxHigherPriorityTaskWoken to pdTRUE if sending the notification caused the task to which the notification was sent to leave the Blocked state, and the unblocked task has a priority higher

than the currently running task. If vTaskNotifyGiveFromISR() sets this value to pdTRUE then a context switch should be requested before the interrupt is exited. How a context switch is requested from an ISR is dependent on the port - see the documentation page for the port in use.

uint32_t **ulTaskGenericNotifyTake**(UBaseType_t uxIndexToWaitOn, BaseType_t xClearCountOnExit, TickType_t xTicksToWait)

Waits for a direct to task notification on a particular index in the calling task's notification array in a manner similar to taking a counting semaphore.

See https://www.FreeRTOS.org/RTOS-task-notifications.html for details.

configUSE_TASK_NOTIFICATIONS must be undefined or defined as 1 for this function to be available.

Each task has a private array of "notification values" (or 'notifications'), each of which is a 32-bit unsigned integer (uint32_t). The constant configTASK_NOTIFICATION_ARRAY_ENTRIES sets the number of indexes in the array, and (for backward compatibility) defaults to 1 if left undefined. Prior to FreeRTOS V10.4.0 there was only one notification value per task.

Events can be sent to a task using an intermediary object. Examples of such objects are queues, semaphores, mutexes and event groups. Task notifications are a method of sending an event directly to a task without the need for such an intermediary object.

A notification sent to a task can optionally perform an action, such as update, overwrite or increment one of the task's notification values. In that way task notifications can be used to send data to a task, or be used as light weight and fast binary or counting semaphores.

ulTaskNotifyTakeIndexed() is intended for use when a task notification is used as a faster and lighter weight binary or counting semaphore alternative. Actual FreeRTOS semaphores are taken using the xSemaphoreTake() API function, the equivalent action that instead uses a task notification is ulTaskNotifyTakeIndexed().

When a task is using its notification value as a binary or counting semaphore other tasks should send notifications to it using the xTaskNotifyGiveIndexed() macro, or xTaskNotifyIndex() function with the eAction parameter set to eIncrement.

ulTaskNotifyTakeIndexed() can either clear the task's notification value at the array index specified by the uxIndexToWaitOn parameter to zero on exit, in which case the notification value acts like a binary semaphore, or decrement the notification value on exit, in which case the notification value acts like a counting semaphore.

A task can use ulTaskNotifyTakeIndexed() to [optionally] block to wait for the task's notification value to be non-zero. The task does not consume any CPU time while it is in the Blocked state.

Where as xTaskNotifyWaitIndexed() will return when a notification is pending, ulTaskNotifyTakeIndexed() will return when the task's notification value is not zero.

NOTE Each notification within the array operates independently - a task can only block on one notification within the array at a time and will not be unblocked by a notification sent to any other array index.

Backward compatibility information: Prior to FreeRTOS V10.4.0 each task had a single "notification value", and all task notification API functions operated on that value. Replacing the single notification value with an array of notification values necessitated a new set of API functions that could address specific notifications within the array. ulTaskNotifyTake() is the original API function, and remains backward compatible by always operating on the notification value at index 0 in the array. Calling ulTaskNotifyTake() is equivalent to calling ulTaskNotifyTakeIndexed() with the uxIndexToWaitOn parameter set to 0.

Parameters

- **uxIndexToWaitOn** –The index within the calling task's array of notification values on which the calling task will wait for a notification to be non-zero. uxIndexToWaitOn must be less than configTASK_NOTIFICATION_ARRAY_ENTRIES. xTaskNotifyTake() does not have this parameter and always waits for notifications on index 0.
- **xClearCountOnExit** –if xClearCountOnExit is pdFALSE then the task's notification value is decremented when the function exits. In this way the notification value acts

like a counting semaphore. If xClearCountOnExit is not pdFALSE then the task's notification value is cleared to zero when the function exits. In this way the notification value acts like a binary semaphore.

- **xTicksToWait** –The maximum amount of time that the task should wait in the Blocked state for the task's notification value to be greater than zero, should the count not already be greater than zero when ulTaskNotifyTake() was called. The task will not consume any processing time while it is in the Blocked state. This is specified in kernel ticks, the macro pdMS_TO_TICKS(value_in_ms) can be used to convert a time specified in milliseconds to a time specified in ticks.

Returns The task's notification count before it is either cleared to zero or decremented (see the xClearCountOnExit parameter).

BaseType_t **xTaskGenericNotifyStateClear**(*TaskHandle_t* xTask, UBaseType_t uxIndexToClear)

See https://www.FreeRTOS.org/RTOS-task-notifications.html for details.

configUSE_TASK_NOTIFICATIONS must be undefined or defined as 1 for these functions to be available.

Each task has a private array of "notification values" (or 'notifications'), each of which is a 32-bit unsigned integer (uint32_t). The constant configTASK_NOTIFICATION_ARRAY_ENTRIES sets the number of indexes in the array, and (for backward compatibility) defaults to 1 if left undefined. Prior to FreeRTOS V10.4.0 there was only one notification value per task.

If a notification is sent to an index within the array of notifications then the notification at that index is said to be 'pending' until it is read or explicitly cleared by the receiving task. xTaskNotifyStateClearIndexed() is the function that clears a pending notification without reading the notification value. The notification value at the same array index is not altered. Set xTask to NULL to clear the notification state of the calling task.

Backward compatibility information: Prior to FreeRTOS V10.4.0 each task had a single "notification value", and all task notification API functions operated on that value. Replacing the single notification value with an array of notification values necessitated a new set of API functions that could address specific notifications within the array. xTaskNotifyStateClear() is the original API function, and remains backward compatible by always operating on the notification value at index 0 within the array. Calling xTaskNotifyStateClear() is equivalent to calling xTaskNotifyStateClearIndexed() with the uxIndexToNotify parameter set to 0.

Parameters

- **xTask** –The handle of the RTOS task that will have a notification state cleared. Set xTask to NULL to clear a notification state in the calling task. To obtain a task's handle create the task using xTaskCreate() and make use of the pxCreatedTask parameter, or create the task using xTaskCreateStatic() and store the returned value, or use the task's name in a call to xTaskGetHandle().
- **uxIndexToClear** –The index within the target task's array of notification values to act upon. For example, setting uxIndexToClear to 1 will clear the state of the notification at index 1 within the array. uxIndexToClear must be less than configTASK_NOTIFICATION_ARRAY_ENTRIES. ulTaskNotifyStateClear() does not have this parameter and always acts on the notification at index 0.

Returns pdTRUE if the task's notification state was set to eNotWaitingNotification, otherwise pdFALSE.

uint32_t **ulTaskGenericNotifyValueClear**(*TaskHandle_t* xTask, UBaseType_t uxIndexToClear, uint32_t ulBitsToClear)

See https://www.FreeRTOS.org/RTOS-task-notifications.html for details.

configUSE_TASK_NOTIFICATIONS must be undefined or defined as 1 for these functions to be available.

Each task has a private array of "notification values" (or 'notifications'), each of which is a 32-bit unsigned integer (uint32_t). The constant configTASK_NOTIFICATION_ARRAY_ENTRIES sets the number of indexes in the array, and (for backward compatibility) defaults to 1 if left undefined. Prior to FreeRTOS V10.4.0 there was only one notification value per task.

ulTaskNotifyValueClearIndexed() clears the bits specified by the ulBitsToClear bit mask in the notification value at array index uxIndexToClear of the task referenced by xTask.

Backward compatibility information: Prior to FreeRTOS V10.4.0 each task had a single "notification value", and all task notification API functions operated on that value. Replacing the single notification value with an array of notification values necessitated a new set of API functions that could address specific notifications within the array. ulTaskNotifyValueClear() is the original API function, and remains backward compatible by always operating on the notification value at index 0 within the array. Calling ulTaskNotifyValueClear() is equivalent to calling ulTaskNotifyValueClearIndexed() with the uxIndexToClear parameter set to 0.

Parameters

- **xTask** –The handle of the RTOS task that will have bits in one of its notification values cleared. Set xTask to NULL to clear bits in a notification value of the calling task. To obtain a task's handle create the task using xTaskCreate() and make use of the pxCreatedTask parameter, or create the task using xTaskCreateStatic() and store the returned value, or use the task's name in a call to xTaskGetHandle().
- **uxIndexToClear** –The index within the target task's array of notification values in which to clear the bits. uxIndexToClear must be less than configTASK_NOTIFICATION_ARRAY_ENTRIES. ulTaskNotifyValueClear() does not have this parameter and always clears bits in the notification value at index 0.
- **ulBitsToClear** –Bit mask of the bits to clear in the notification value of xTask. Set a bit to 1 to clear the corresponding bits in the task's notification value. Set ulBitsToClear to 0xffffffff (UINT_MAX on 32-bit architectures) to clear the notification value to 0. Set ulBitsToClear to 0 to query the task's notification value without clearing any bits.

Returns The value of the target task's notification value before the bits specified by ulBitsToClear were cleared.

void **vTaskSetTimeOutState**(TimeOut_t *const pxTimeOut)

BaseType_t **xTaskCheckForTimeOut**(TimeOut_t *const pxTimeOut, TickType_t *const pxTicksToWait)

Determines if pxTicksToWait ticks has passed since a time was captured using a call to vTaskSetTimeOutState(). The captured time includes the tick count and the number of times the tick count has overflowed.

Example Usage:

```
// Driver library function used to receive uxWantedBytes from an Rx buffer
// that is filled by a UART interrupt. If there are not enough bytes in the
// Rx buffer then the task enters the Blocked state until it is notified that
// more data has been placed into the buffer. If there is still not enough
// data then the task re-enters the Blocked state, and xTaskCheckForTimeOut()
// is used to re-calculate the Block time to ensure the total amount of time
// spent in the Blocked state does not exceed MAX_TIME_TO_WAIT. This
// continues until either the buffer contains at least uxWantedBytes bytes,
// or the total amount of time spent in the Blocked state reaches
// MAX_TIME_TO_WAIT – at which point the task reads however many bytes are
// available up to a maximum of uxWantedBytes.

size_t xUART_Receive( uint8_t *pucBuffer, size_t uxWantedBytes )
{
size_t uxReceived = 0;
TickType_t xTicksToWait = MAX_TIME_TO_WAIT;
TimeOut_t xTimeOut;

    // Initialize xTimeOut.  This records the time at which this function
    // was entered.
    vTaskSetTimeOutState( &xTimeOut );

    // Loop until the buffer contains the wanted number of bytes, or a
    // timeout occurs.
    while( UART_bytes_in_rx_buffer( pxUARTInstance ) < uxWantedBytes )
    {
        // The buffer didn't contain enough data so this task is going to
        // enter the Blocked state. Adjusting xTicksToWait to account for
```

(continues on next page)

(continued from previous page)

```
        // any time that has been spent in the Blocked state within this
        // function so far to ensure the total amount of time spent in the
        // Blocked state does not exceed MAX_TIME_TO_WAIT.
        if( xTaskCheckForTimeOut( &xTimeOut, &xTicksToWait ) != pdFALSE )
        {
            //Timed out before the wanted number of bytes were available,
            // exit the loop.
            break;
        }

        // Wait for a maximum of xTicksToWait ticks to be notified that the
        // receive interrupt has placed more data into the buffer.
        ulTaskNotifyTake( pdTRUE, xTicksToWait );
    }

    // Attempt to read uxWantedBytes from the receive buffer into pucBuffer.
    // The actual number of bytes read (which might be less than
    // uxWantedBytes) is returned.
    uxReceived = UART_read_from_receive_buffer( pxUARTInstance,
                                                pucBuffer,
                                                uxWantedBytes );

    return uxReceived;
}
```

See also:

https://www.FreeRTOS.org/xTaskCheckForTimeOut.html

Parameters

- **pxTimeOut** –The time status as captured previously using vTaskSetTimeOutState. If the timeout has not yet occurred, it is updated to reflect the current time status.
- **pxTicksToWait** –The number of ticks to check for timeout i.e. if pxTicksToWait ticks have passed since pxTimeOut was last updated (either by vTaskSetTimeOutState() or xTaskCheckForTimeOut()), the timeout has occurred. If the timeout has not occurred, pxTicksToWait is updated to reflect the number of remaining ticks.

Returns If timeout has occurred, pdTRUE is returned. Otherwise pdFALSE is returned and pxTicksToWait is updated to reflect the number of remaining ticks.

BaseType_t **xTaskCatchUpTicks**(TickType_t xTicksToCatchUp)

Macros

tskKERNEL_VERSION_NUMBER

tskKERNEL_VERSION_MAJOR

tskKERNEL_VERSION_MINOR

tskKERNEL_VERSION_BUILD

tskMPU_REGION_READ_ONLY

tskMPU_REGION_READ_WRITE

tskMPU_REGION_EXECUTE_NEVER

tskMPU_REGION_NORMAL_MEMORY

tskMPU_REGION_DEVICE_MEMORY

tskDEFAULT_INDEX_TO_NOTIFY

tskNO_AFFINITY

tskIDLE_PRIORITY

Defines the priority used by the idle task. This must not be modified.

taskYIELD()

Macro for forcing a context switch.

taskENTER_CRITICAL()

Macro to mark the start of a critical code region. Preemptive context switches cannot occur when in a critical region.

Note: This may alter the stack (depending on the portable implementation) so must be used with care!

---

taskENTER_CRITICAL_FROM_ISR()

taskENTER_CRITICAL_ISR()

taskEXIT_CRITICAL()

Macro to mark the end of a critical code region. Preemptive context switches cannot occur when in a critical region.

Note: This may alter the stack (depending on the portable implementation) so must be used with care!

---

taskEXIT_CRITICAL_FROM_ISR(x)

taskEXIT_CRITICAL_ISR()

taskDISABLE_INTERRUPTS()

Macro to disable all maskable interrupts.

taskENABLE_INTERRUPTS()

Macro to enable microcontroller interrupts.

taskSCHEDULER_SUSPENDED

taskSCHEDULER_NOT_STARTED

taskSCHEDULER_RUNNING

vTaskDelayUntil(pxPreviousWakeTime, xTimeIncrement)

xTaskNotify(xTaskToNotify, ulValue, eAction)

xTaskNotifyIndexed(xTaskToNotify, uxIndexToNotify, ulValue, eAction)

xTaskNotifyAndQuery(xTaskToNotify, ulValue, eAction, pulPreviousNotifyValue)

See https://www.FreeRTOS.org/RTOS-task-notifications.html for details.

xTaskNotifyAndQueryIndexed() performs the same operation as xTaskNotifyIndexed() with the addition that it also returns the subject task's prior notification value (the notification value at the time the function is called rather than when the function returns) in the additional pulPreviousNotifyValue parameter.

xTaskNotifyAndQuery() performs the same operation as xTaskNotify() with the addition that it also returns the subject task's prior notification value (the notification value as it was at the time the function is called, rather than when the function returns) in the additional pulPreviousNotifyValue parameter.

xTaskNotifyAndQueryIndexed(xTaskToNotify, uxIndexToNotify, ulValue, eAction, pulPreviousNotifyValue)

xTaskNotifyFromISR(xTaskToNotify, ulValue, eAction, pxHigherPriorityTaskWoken)

xTaskNotifyIndexedFromISR(xTaskToNotify, uxIndexToNotify, ulValue, eAction, pxHigherPriorityTaskWoken)

xTaskNotifyAndQueryIndexedFromISR(xTaskToNotify, uxIndexToNotify, ulValue, eAction, pulPreviousNotificationValue, pxHigherPriorityTaskWoken)

See https://www.FreeRTOS.org/RTOS-task-notifications.html for details.

xTaskNotifyAndQueryIndexedFromISR() performs the same operation as xTaskNotifyIndexedFromISR() with the addition that it also returns the subject task's prior notification value (the notification value at the time the function is called rather than at the time the function returns) in the additional pulPreviousNotifyValue parameter.

xTaskNotifyAndQueryFromISR() performs the same operation as xTaskNotifyFromISR() with the addition that it also returns the subject task's prior notification value (the notification value at the time the function is called rather than at the time the function returns) in the additional pulPreviousNotifyValue parameter.

xTaskNotifyAndQueryFromISR(xTaskToNotify, ulValue, eAction, pulPreviousNotificationValue, pxHigherPriorityTaskWoken)

xTaskNotifyWait(ulBitsToClearOnEntry, ulBitsToClearOnExit, pulNotificationValue, xTicksToWait)

xTaskNotifyWaitIndexed(uxIndexToWaitOn, ulBitsToClearOnEntry, ulBitsToClearOnExit, pulNotificationValue, xTicksToWait)

xTaskNotifyGiveIndexed(xTaskToNotify, uxIndexToNotify)

Sends a direct to task notification to a particular index in the target task's notification array in a manner similar to giving a counting semaphore.

See https://www.FreeRTOS.org/RTOS-task-notifications.html for more details.

configUSE_TASK_NOTIFICATIONS must be undefined or defined as 1 for these macros to be available.

Each task has a private array of "notification values" (or 'notifications'), each of which is a 32-bit unsigned integer (uint32_t). The constant configTASK_NOTIFICATION_ARRAY_ENTRIES sets the number of indexes in the array, and (for backward compatibility) defaults to 1 if left undefined. Prior to FreeRTOS V10.4.0 there was only one notification value per task.

Events can be sent to a task using an intermediary object. Examples of such objects are queues, semaphores, mutexes and event groups. Task notifications are a method of sending an event directly to a task without the need for such an intermediary object.

A notification sent to a task can optionally perform an action, such as update, overwrite or increment one of the task's notification values. In that way task notifications can be used to send data to a task, or be used as light weight and fast binary or counting semaphores.

xTaskNotifyGiveIndexed() is a helper macro intended for use when task notifications are used as light weight and faster binary or counting semaphore equivalents. Actual FreeRTOS semaphores are given using the

xSemaphoreGive() API function, the equivalent action that instead uses a task notification is xTaskNotifyGiveIndexed().

When task notifications are being used as a binary or counting semaphore equivalent then the task being notified should wait for the notification using the ulTaskNotificationTakeIndexed() API function rather than the xTaskNotifyWaitIndexed() API function.

NOTE Each notification within the array operates independently - a task can only block on one notification within the array at a time and will not be unblocked by a notification sent to any other array index.

Backward compatibility information: Prior to FreeRTOS V10.4.0 each task had a single "notification value", and all task notification API functions operated on that value. Replacing the single notification value with an array of notification values necessitated a new set of API functions that could address specific notifications within the array. xTaskNotifyGive() is the original API function, and remains backward compatible by always operating on the notification value at index 0 in the array. Calling xTaskNotifyGive() is equivalent to calling xTaskNotifyGiveIndexed() with the uxIndexToNotify parameter set to 0.

Parameters

- **`xTaskToNotify`** –The handle of the task being notified. The handle to a task can be returned from the xTaskCreate() API function used to create the task, and the handle of the currently running task can be obtained by calling xTaskGetCurrentTaskHandle().
- **`uxIndexToNotify`** –The index within the target task's array of notification values to which the notification is to be sent. uxIndexToNotify must be less than configTASK_NOTIFICATION_ARRAY_ENTRIES. xTaskNotifyGive() does not have this parameter and always sends notifications to index 0.

Returns xTaskNotifyGive() is a macro that calls xTaskNotify() with the eAction parameter set to eIncrement - so pdPASS is always returned.

`xTaskNotifyGive`(xTaskToNotify)

`vTaskNotifyGiveFromISR`(xTaskToNotify, pxHigherPriorityTaskWoken)

`vTaskNotifyGiveIndexedFromISR`(xTaskToNotify, uxIndexToNotify, pxHigherPriorityTaskWoken)

`ulTaskNotifyTake`(xClearCountOnExit, xTicksToWait)

`ulTaskNotifyTakeIndexed`(uxIndexToWaitOn, xClearCountOnExit, xTicksToWait)

`xTaskNotifyStateClear`(xTask)

`xTaskNotifyStateClearIndexed`(xTask, uxIndexToClear)

`ulTaskNotifyValueClear`(xTask, ulBitsToClear)

`ulTaskNotifyValueClearIndexed`(xTask, uxIndexToClear, ulBitsToClear)

Type Definitions

typedef struct tskTaskControlBlock ***`TaskHandle_t`**

typedef BaseType_t (***`TaskHookFunction_t`**)(void*)

Defines the prototype to which the application task hook function must conform.

typedef void (***`TlsDeleteCallbackFunction_t`**)(int, void*)

Prototype of local storage pointer deletion callback.

Enumerations

enum **eTaskState**

Task states returned by eTaskGetState.

Values:

enumerator **eRunning**

enumerator **eReady**

enumerator **eBlocked**

enumerator **eSuspended**

enumerator **eDeleted**

enumerator **eInvalid**

enum **eNotifyAction**

Values:

enumerator **eNoAction**

enumerator **eSetBits**

enumerator **eIncrement**

enumerator **eSetValueWithOverwrite**

enumerator **eSetValueWithoutOverwrite**

enum **eSleepModeStatus**

Possible return values for eTaskConfirmSleepModeStatus().

Values:

enumerator **eAbortSleep**

enumerator **eStandardSleep**

enumerator **eNoTasksWaitingTimeout**

Queue API

Header File

- components/freertos/include/freertos/queue.h

Functions

BaseType_t **xQueueGenericSend**(*QueueHandle_t* xQueue, const void *const pvItemToQueue, TickType_t xTicksToWait, const BaseType_t xCopyPosition)

It is preferred that the macros xQueueSend(), xQueueSendToFront() and xQueueSendToBack() are used in place of calling this function directly.

Post an item on a queue. The item is queued by copy, not by reference. This function must not be called from an interrupt service routine. See xQueueSendFromISR () for an alternative which may be used in an ISR.

Example usage:

```
struct AMessage
{
 char ucMessageID;
 char ucData[ 20 ];
} xMessage;

uint32_t ulVar = 10UL;

void vATask( void *pvParameters )
{
QueueHandle_t xQueue1, xQueue2;
struct AMessage *pxMessage;

 // Create a queue capable of containing 10 uint32_t values.
 xQueue1 = xQueueCreate( 10, sizeof( uint32_t ) );

 // Create a queue capable of containing 10 pointers to AMessage structures.
 // These should be passed by pointer as they contain a lot of data.
 xQueue2 = xQueueCreate( 10, sizeof( struct AMessage * ) );

 // ...

 if( xQueue1 != 0 )
 {
     // Send an uint32_t.  Wait for 10 ticks for space to become
     // available if necessary.
     if( xQueueGenericSend( xQueue1, ( void * ) &ulVar, ( TickType_t ) 10,␣
↪queueSEND_TO_BACK ) != pdPASS )
     {
         // Failed to post the message, even after 10 ticks.
     }
 }

 if( xQueue2 != 0 )
 {
     // Send a pointer to a struct AMessage object.  Don't block if the
     // queue is already full.
     pxMessage = & xMessage;
     xQueueGenericSend( xQueue2, ( void * ) &pxMessage, ( TickType_t ) 0,␣
↪queueSEND_TO_BACK );
 }

 // ... Rest of task code.
}
```

Parameters

- **xQueue** –The handle to the queue on which the item is to be posted.
- **pvItemToQueue** –A pointer to the item that is to be placed on the queue. The size of the items the queue will hold was defined when the queue was created, so this many bytes will be copied from pvItemToQueue into the queue storage area.

- **xTicksToWait** –The maximum amount of time the task should block waiting for space to become available on the queue, should it already be full. The call will return immediately if this is set to 0 and the queue is full. The time is defined in tick periods so the constant portTICK_PERIOD_MS should be used to convert to real time if this is required.
- **xCopyPosition** –Can take the value queueSEND_TO_BACK to place the item at the back of the queue, or queueSEND_TO_FRONT to place the item at the front of the queue (for high priority messages).

Returns pdTRUE if the item was successfully posted, otherwise errQUEUE_FULL.

BaseType_t **xQueuePeek**(*QueueHandle_t* xQueue, void *const pvBuffer, TickType_t xTicksToWait)

Receive an item from a queue without removing the item from the queue. The item is received by copy so a buffer of adequate size must be provided. The number of bytes copied into the buffer was defined when the queue was created.

Successfully received items remain on the queue so will be returned again by the next call, or a call to xQueueReceive().

This macro must not be used in an interrupt service routine. See xQueuePeekFromISR() for an alternative that can be called from an interrupt service routine.

Example usage:

```
struct AMessage
{
 char ucMessageID;
 char ucData[ 20 ];
} xMessage;

QueueHandle_t xQueue;

// Task to create a queue and post a value.
void vATask( void *pvParameters )
{
struct AMessage *pxMessage;

 // Create a queue capable of containing 10 pointers to AMessage structures.
 // These should be passed by pointer as they contain a lot of data.
 xQueue = xQueueCreate( 10, sizeof( struct AMessage * ) );
 if( xQueue == 0 )
 {
     // Failed to create the queue.
 }

 // ...

 // Send a pointer to a struct AMessage object.  Don't block if the
 // queue is already full.
 pxMessage = & xMessage;
 xQueueSend( xQueue, ( void * ) &pxMessage, ( TickType_t ) 0 );

 // ... Rest of task code.
}

// Task to peek the data from the queue.
void vADifferentTask( void *pvParameters )
{
struct AMessage *pxRxedMessage;

 if( xQueue != 0 )
 {
     // Peek a message on the created queue.  Block for 10 ticks if a
```

(continues on next page)

(continued from previous page)

```
    // message is not immediately available.
    if( xQueuePeek( xQueue, &( pxRxedMessage ), ( TickType_t ) 10 ) )
    {
        // pcRxedMessage now points to the struct AMessage variable posted
        // by vATask, but the item still remains on the queue.
    }
 }

 // ... Rest of task code.
}
```

Parameters

- **xQueue** –The handle to the queue from which the item is to be received.
- **pvBuffer** –Pointer to the buffer into which the received item will be copied.
- **xTicksToWait** –The maximum amount of time the task should block waiting for an item to receive should the queue be empty at the time of the call. The time is defined in tick periods so the constant portTICK_PERIOD_MS should be used to convert to real time if this is required. xQueuePeek() will return immediately if xTicksToWait is 0 and the queue is empty.

Returns pdTRUE if an item was successfully received from the queue, otherwise pdFALSE.

BaseType_t **xQueuePeekFromISR**(*QueueHandle_t* xQueue, void *const pvBuffer)

A version of xQueuePeek() that can be called from an interrupt service routine (ISR).

Receive an item from a queue without removing the item from the queue. The item is received by copy so a buffer of adequate size must be provided. The number of bytes copied into the buffer was defined when the queue was created.

Successfully received items remain on the queue so will be returned again by the next call, or a call to xQueueReceive().

Parameters

- **xQueue** –The handle to the queue from which the item is to be received.
- **pvBuffer** –Pointer to the buffer into which the received item will be copied.

Returns pdTRUE if an item was successfully received from the queue, otherwise pdFALSE.

BaseType_t **xQueueReceive**(*QueueHandle_t* xQueue, void *const pvBuffer, TickType_t xTicksToWait)

Receive an item from a queue. The item is received by copy so a buffer of adequate size must be provided. The number of bytes copied into the buffer was defined when the queue was created.

Successfully received items are removed from the queue.

This function must not be used in an interrupt service routine. See xQueueReceiveFromISR for an alternative that can.

Example usage:

```
struct AMessage
{
 char ucMessageID;
 char ucData[ 20 ];
} xMessage;

QueueHandle_t xQueue;

// Task to create a queue and post a value.
void vATask( void *pvParameters )
{
struct AMessage *pxMessage;
```

(continues on next page)

(continued from previous page)

```
 // Create a queue capable of containing 10 pointers to AMessage structures.
 // These should be passed by pointer as they contain a lot of data.
 xQueue = xQueueCreate( 10, sizeof( struct AMessage * ) );
 if( xQueue == 0 )
 {
     // Failed to create the queue.
 }

 // ...

 // Send a pointer to a struct AMessage object.  Don't block if the
 // queue is already full.
 pxMessage = & xMessage;
 xQueueSend( xQueue, ( void * ) &pxMessage, ( TickType_t ) 0 );

 // ... Rest of task code.
}

// Task to receive from the queue.
void vADifferentTask( void *pvParameters )
{
struct AMessage *pxRxedMessage;

 if( xQueue != 0 )
 {
     // Receive a message on the created queue.  Block for 10 ticks if a
     // message is not immediately available.
     if( xQueueReceive( xQueue, &( pxRxedMessage ), ( TickType_t ) 10 ) )
     {
         // pcRxedMessage now points to the struct AMessage variable posted
         // by vATask.
     }
 }

 // ... Rest of task code.
}
```

Parameters

- **xQueue** –The handle to the queue from which the item is to be received.
- **pvBuffer** –Pointer to the buffer into which the received item will be copied.
- **xTicksToWait** –The maximum amount of time the task should block waiting for an item to receive should the queue be empty at the time of the call. xQueueReceive() will return immediately if xTicksToWait is zero and the queue is empty. The time is defined in tick periods so the constant portTICK_PERIOD_MS should be used to convert to real time if this is required.

Returns pdTRUE if an item was successfully received from the queue, otherwise pdFALSE.

UBaseType_t **uxQueueMessagesWaiting**(const *QueueHandle_t* xQueue)

Return the number of messages stored in a queue.

Parameters **xQueue** –A handle to the queue being queried.
Returns The number of messages available in the queue.

UBaseType_t **uxQueueSpacesAvailable**(const *QueueHandle_t* xQueue)

Return the number of free spaces available in a queue. This is equal to the number of items that can be sent to the queue before the queue becomes full if no items are removed.

Parameters **xQueue** –A handle to the queue being queried.
Returns The number of spaces available in the queue.

void **vQueueDelete**(*QueueHandle_t* xQueue)

Delete a queue - freeing all the memory allocated for storing of items placed on the queue.

Parameters **xQueue** –A handle to the queue to be deleted.

BaseType_t **xQueueGenericSendFromISR**(*QueueHandle_t* xQueue, const void *const pvItemToQueue, BaseType_t *const pxHigherPriorityTaskWoken, const BaseType_t xCopyPosition)

It is preferred that the macros xQueueSendFromISR(), xQueueSendToFrontFromISR() and xQueueSendToBackFromISR() be used in place of calling this function directly. xQueueGiveFromISR() is an equivalent for use by semaphores that don't actually copy any data.

Post an item on a queue. It is safe to use this function from within an interrupt service routine.

Items are queued by copy not reference so it is preferable to only queue small items, especially when called from an ISR. In most cases it would be preferable to store a pointer to the item being queued.

Example usage for buffered IO (where the ISR can obtain more than one value per call):

```
void vBufferISR( void )
{
char cIn;
BaseType_t xHigherPriorityTaskWokenByPost;

 // We have not woken a task at the start of the ISR.
 xHigherPriorityTaskWokenByPost = pdFALSE;

 // Loop until the buffer is empty.
 do
 {
     // Obtain a byte from the buffer.
     cIn = portINPUT_BYTE( RX_REGISTER_ADDRESS );

     // Post each byte.
     xQueueGenericSendFromISR( xRxQueue, &cIn, &xHigherPriorityTaskWokenByPost,
↪ queueSEND_TO_BACK );

 } while( portINPUT_BYTE( BUFFER_COUNT ) );

 // Now the buffer is empty we can switch context if necessary.  Note that the
 // name of the yield function required is port specific.
 if( xHigherPriorityTaskWokenByPost )
 {
     taskYIELD_YIELD_FROM_ISR();
 }
}
```

Parameters

- **xQueue** –The handle to the queue on which the item is to be posted.
- **pvItemToQueue** –A pointer to the item that is to be placed on the queue. The size of the items the queue will hold was defined when the queue was created, so this many bytes will be copied from pvItemToQueue into the queue storage area.
- **pxHigherPriorityTaskWoken** –**[out]** xQueueGenericSendFromISR() will set *pxHigherPriorityTaskWoken to pdTRUE if sending to the queue caused a task to unblock, and the unblocked task has a priority higher than the currently running task. If xQueueGenericSendFromISR() sets this value to pdTRUE then a context switch should be requested before the interrupt is exited.
- **xCopyPosition** –Can take the value queueSEND_TO_BACK to place the item at the back of the queue, or queueSEND_TO_FRONT to place the item at the front of the queue (for high priority messages).

Returns pdTRUE if the data was successfully sent to the queue, otherwise errQUEUE_FULL.

BaseType_t **xQueueGiveFromISR** (*QueueHandle_t* xQueue, BaseType_t *const pxHigherPriorityTaskWoken)

BaseType_t **xQueueReceiveFromISR** (*QueueHandle_t* xQueue, void *const pvBuffer, BaseType_t *const pxHigherPriorityTaskWoken)

Receive an item from a queue. It is safe to use this function from within an interrupt service routine.

Example usage:

```
QueueHandle_t xQueue;

// Function to create a queue and post some values.
void vAFunction( void *pvParameters )
{
char cValueToPost;
const TickType_t xTicksToWait = ( TickType_t )0xff;

 // Create a queue capable of containing 10 characters.
 xQueue = xQueueCreate( 10, sizeof( char ) );
 if( xQueue == 0 )
 {
     // Failed to create the queue.
 }

 // ...

 // Post some characters that will be used within an ISR.  If the queue
 // is full then this task will block for xTicksToWait ticks.
 cValueToPost = 'a';
 xQueueSend( xQueue, ( void * ) &cValueToPost, xTicksToWait );
 cValueToPost = 'b';
 xQueueSend( xQueue, ( void * ) &cValueToPost, xTicksToWait );

 // ... keep posting characters ... this task may block when the queue
 // becomes full.

 cValueToPost = 'c';
 xQueueSend( xQueue, ( void * ) &cValueToPost, xTicksToWait );
}

// ISR that outputs all the characters received on the queue.
void vISR_Routine( void )
{
BaseType_t xTaskWokenByReceive = pdFALSE;
char cRxedChar;

 while( xQueueReceiveFromISR( xQueue, ( void * ) &cRxedChar, &
↪xTaskWokenByReceive) )
 {
     // A character was received.  Output the character now.
     vOutputCharacter( cRxedChar );

     // If removing the character from the queue woke the task that was
     // posting onto the queue cTaskWokenByReceive will have been set to
     // pdTRUE.  No matter how many times this loop iterates only one
     // task will be woken.
 }

 if( cTaskWokenByPost != ( char ) pdFALSE;
 {
     taskYIELD ();
 }
```

(continues on next page)

(continued from previous page)

```
}
```

Parameters

- **xQueue** –The handle to the queue from which the item is to be received.
- **pvBuffer** –Pointer to the buffer into which the received item will be copied.
- **pxHigherPriorityTaskWoken** –**[out]** A task may be blocked waiting for space to become available on the queue. If xQueueReceiveFromISR causes such a task to unblock *pxTaskWoken will get set to pdTRUE, otherwise *pxTaskWoken will remain unchanged.

Returns pdTRUE if an item was successfully received from the queue, otherwise pdFALSE.

BaseType_t **xQueueIsQueueEmptyFromISR**(const *QueueHandle_t* xQueue)

BaseType_t **xQueueIsQueueFullFromISR**(const *QueueHandle_t* xQueue)

UBaseType_t **uxQueueMessagesWaitingFromISR**(const *QueueHandle_t* xQueue)

void **vQueueAddToRegistry**(*QueueHandle_t* xQueue, const char *pcQueueName)

The registry is provided as a means for kernel aware debuggers to locate queues, semaphores and mutexes. Call vQueueAddToRegistry() add a queue, semaphore or mutex handle to the registry if you want the handle to be available to a kernel aware debugger. If you are not using a kernel aware debugger then this function can be ignored.

configQUEUE_REGISTRY_SIZE defines the maximum number of handles the registry can hold. configQUEUE_REGISTRY_SIZE must be greater than 0 within FreeRTOSConfig.h for the registry to be available. Its value does not effect the number of queues, semaphores and mutexes that can be created - just the number that the registry can hold.

Parameters

- **xQueue** –The handle of the queue being added to the registry. This is the handle returned by a call to xQueueCreate(). Semaphore and mutex handles can also be passed in here.
- **pcQueueName** –The name to be associated with the handle. This is the name that the kernel aware debugger will display. The queue registry only stores a pointer to the string - so the string must be persistent (global or preferably in ROM/Flash), not on the stack.

void **vQueueUnregisterQueue**(*QueueHandle_t* xQueue)

The registry is provided as a means for kernel aware debuggers to locate queues, semaphores and mutexes. Call vQueueAddToRegistry() add a queue, semaphore or mutex handle to the registry if you want the handle to be available to a kernel aware debugger, and vQueueUnregisterQueue() to remove the queue, semaphore or mutex from the register. If you are not using a kernel aware debugger then this function can be ignored.

Parameters **xQueue** –The handle of the queue being removed from the registry.

const char *__pcQueueGetName__(*QueueHandle_t* xQueue)

The queue registry is provided as a means for kernel aware debuggers to locate queues, semaphores and mutexes. Call pcQueueGetName() to look up and return the name of a queue in the queue registry from the queue's handle.

Parameters **xQueue** –The handle of the queue the name of which will be returned.

Returns If the queue is in the registry then a pointer to the name of the queue is returned. If the queue is not in the registry then NULL is returned.

QueueHandle_t **xQueueGenericCreate**(const UBaseType_t uxQueueLength, const UBaseType_t uxItemSize, const uint8_t ucQueueType)

Generic version of the function used to create a queue using dynamic memory allocation. This is called by other functions and macros that create other RTOS objects that use the queue structure as their base.

QueueHandle_t **xQueueGenericCreateStatic**(const UBaseType_t uxQueueLength, const UBaseType_t uxItemSize, uint8_t *pucQueueStorage, StaticQueue_t *pxStaticQueue, const uint8_t ucQueueType)

Generic version of the function used to create a queue using dynamic memory allocation. This is called by other functions and macros that create other RTOS objects that use the queue structure as their base.

QueueSetHandle_t **xQueueCreateSet** (const UBaseType_t uxEventQueueLength)

Queue sets provide a mechanism to allow a task to block (pend) on a read operation from multiple queues or semaphores simultaneously.

See FreeRTOS/Source/Demo/Common/Minimal/QueueSet.c for an example using this function.

A queue set must be explicitly created using a call to xQueueCreateSet() before it can be used. Once created, standard FreeRTOS queues and semaphores can be added to the set using calls to xQueueAddToSet(). xQueueSelectFromSet() is then used to determine which, if any, of the queues or semaphores contained in the set is in a state where a queue read or semaphore take operation would be successful.

Note 1: See the documentation on https://www.FreeRTOS.org/RTOS-queue-sets.html for reasons why queue sets are very rarely needed in practice as there are simpler methods of blocking on multiple objects.

Note 2: Blocking on a queue set that contains a mutex will not cause the mutex holder to inherit the priority of the blocked task.

Note 3: An additional 4 bytes of RAM is required for each space in a every queue added to a queue set. Therefore counting semaphores that have a high maximum count value should not be added to a queue set.

Note 4: A receive (in the case of a queue) or take (in the case of a semaphore) operation must not be performed on a member of a queue set unless a call to xQueueSelectFromSet() has first returned a handle to that set member.

Parameters **uxEventQueueLength** –Queue sets store events that occur on the queues and semaphores contained in the set. uxEventQueueLength specifies the maximum number of events that can be queued at once. To be absolutely certain that events are not lost uxEventQueueLength should be set to the total sum of the length of the queues added to the set, where binary semaphores and mutexes have a length of 1, and counting semaphores have a length set by their maximum count value. Examples:

- If a queue set is to hold a queue of length 5, another queue of length 12, and a binary semaphore, then uxEventQueueLength should be set to (5 + 12 + 1), or 18.
- If a queue set is to hold three binary semaphores then uxEventQueueLength should be set to (1 + 1 + 1), or 3.
- If a queue set is to hold a counting semaphore that has a maximum count of 5, and a counting semaphore that has a maximum count of 3, then uxEventQueueLength should be set to (5 + 3), or 8.

Returns If the queue set is created successfully then a handle to the created queue set is returned. Otherwise NULL is returned.

BaseType_t **xQueueAddToSet** (*QueueSetMemberHandle_t* xQueueOrSemaphore, *QueueSetHandle_t* xQueueSet)

Adds a queue or semaphore to a queue set that was previously created by a call to xQueueCreateSet().

See FreeRTOS/Source/Demo/Common/Minimal/QueueSet.c for an example using this function.

Note 1: A receive (in the case of a queue) or take (in the case of a semaphore) operation must not be performed on a member of a queue set unless a call to xQueueSelectFromSet() has first returned a handle to that set member.

Parameters

- **xQueueOrSemaphore** –The handle of the queue or semaphore being added to the queue set (cast to an QueueSetMemberHandle_t type).
- **xQueueSet** –The handle of the queue set to which the queue or semaphore is being added.

Returns If the queue or semaphore was successfully added to the queue set then pdPASS is returned. If the queue could not be successfully added to the queue set because it is already a member of a different queue set then pdFAIL is returned.

BaseType_t **xQueueRemoveFromSet**(*QueueSetMemberHandle_t* xQueueOrSemaphore, *QueueSetHandle_t* xQueueSet)

Removes a queue or semaphore from a queue set. A queue or semaphore can only be removed from a set if the queue or semaphore is empty.

See FreeRTOS/Source/Demo/Common/Minimal/QueueSet.c for an example using this function.

Parameters

- **xQueueOrSemaphore** –The handle of the queue or semaphore being removed from the queue set (cast to an QueueSetMemberHandle_t type).
- **xQueueSet** –The handle of the queue set in which the queue or semaphore is included.

Returns If the queue or semaphore was successfully removed from the queue set then pdPASS is returned. If the queue was not in the queue set, or the queue (or semaphore) was not empty, then pdFAIL is returned.

QueueSetMemberHandle_t **xQueueSelectFromSet**(*QueueSetHandle_t* xQueueSet, const TickType_t xTicksToWait)

xQueueSelectFromSet() selects from the members of a queue set a queue or semaphore that either contains data (in the case of a queue) or is available to take (in the case of a semaphore). xQueueSelectFromSet() effectively allows a task to block (pend) on a read operation on all the queues and semaphores in a queue set simultaneously.

See FreeRTOS/Source/Demo/Common/Minimal/QueueSet.c for an example using this function.

Note 1: See the documentation on https://www.FreeRTOS.org/RTOS-queue-sets.html for reasons why queue sets are very rarely needed in practice as there are simpler methods of blocking on multiple objects.

Note 2: Blocking on a queue set that contains a mutex will not cause the mutex holder to inherit the priority of the blocked task.

Note 3: A receive (in the case of a queue) or take (in the case of a semaphore) operation must not be performed on a member of a queue set unless a call to xQueueSelectFromSet() has first returned a handle to that set member.

Parameters

- **xQueueSet** –The queue set on which the task will (potentially) block.
- **xTicksToWait** –The maximum time, in ticks, that the calling task will remain in the Blocked state (with other tasks executing) to wait for a member of the queue set to be ready for a successful queue read or semaphore take operation.

Returns xQueueSelectFromSet() will return the handle of a queue (cast to a QueueSetMember-Handle_t type) contained in the queue set that contains data, or the handle of a semaphore (cast to a QueueSetMemberHandle_t type) contained in the queue set that is available, or NULL if no such queue or semaphore exists before before the specified block time expires.

QueueSetMemberHandle_t **xQueueSelectFromSetFromISR**(*QueueSetHandle_t* xQueueSet)

A version of xQueueSelectFromSet() that can be used from an ISR.

Macros

xQueueCreate(uxQueueLength, uxItemSize)

Creates a new queue instance, and returns a handle by which the new queue can be referenced.

Internally, within the FreeRTOS implementation, queues use two blocks of memory. The first block is used to hold the queue's data structures. The second block is used to hold items placed into the queue. If a queue is created using xQueueCreate() then both blocks of memory are automatically dynamically allocated inside the xQueueCreate() function. (see https://www.FreeRTOS.org/a00111.html). If a queue is created using xQueueCreateStatic() then the application writer must provide the memory that will get used by the queue. xQueueCreateStatic() therefore allows a queue to be created without using any dynamic memory allocation.

https://www.FreeRTOS.org/Embedded-RTOS-Queues.html

Example usage:

```
struct AMessage
{
 char ucMessageID;
 char ucData[ 20 ];
};

void vATask( void *pvParameters )
{
QueueHandle_t xQueue1, xQueue2;

 // Create a queue capable of containing 10 uint32_t values.
 xQueue1 = xQueueCreate( 10, sizeof( uint32_t ) );
 if( xQueue1 == 0 )
 {
     // Queue was not created and must not be used.
 }

 // Create a queue capable of containing 10 pointers to AMessage structures.
 // These should be passed by pointer as they contain a lot of data.
 xQueue2 = xQueueCreate( 10, sizeof( struct AMessage * ) );
 if( xQueue2 == 0 )
 {
     // Queue was not created and must not be used.
 }

 // ... Rest of task code.
}
```

Parameters

- **uxQueueLength** –The maximum number of items that the queue can contain.
- **uxItemSize** –The number of bytes each item in the queue will require. Items are queued by copy, not by reference, so this is the number of bytes that will be copied for each posted item. Each item on the queue must be the same size.

Returns If the queue is successfully create then a handle to the newly created queue is returned. If the queue cannot be created then 0 is returned.

xQueueCreateStatic(uxQueueLength, uxItemSize, pucQueueStorage, pxQueueBuffer)

Creates a new queue instance, and returns a handle by which the new queue can be referenced.

Internally, within the FreeRTOS implementation, queues use two blocks of memory. The first block is used to hold the queue's data structures. The second block is used to hold items placed into the queue. If a queue is created using xQueueCreate() then both blocks of memory are automatically dynamically allocated inside the xQueueCreate() function. (see https://www.FreeRTOS.org/a00111.html). If a queue is created using xQueueCreateStatic() then the application writer must provide the memory that will get used by the queue. xQueueCreateStatic() therefore allows a queue to be created without using any dynamic memory allocation.

https://www.FreeRTOS.org/Embedded-RTOS-Queues.html

Example usage:

```
struct AMessage
{
 char ucMessageID;
 char ucData[ 20 ];
};

#define QUEUE_LENGTH 10
#define ITEM_SIZE sizeof( uint32_t )

// xQueueBuffer will hold the queue structure.
```

(continues on next page)

(continued from previous page)

```
StaticQueue_t xQueueBuffer;

// ucQueueStorage will hold the items posted to the queue.  Must be at least
// [(queue length) * ( queue item size)] bytes long.
uint8_t ucQueueStorage[ QUEUE_LENGTH * ITEM_SIZE ];

void vATask( void *pvParameters )
{
QueueHandle_t xQueue1;

 // Create a queue capable of containing 10 uint32_t values.
 xQueue1 = xQueueCreate( QUEUE_LENGTH, // The number of items the queue can␣
↪hold.
                         ITEM_SIZE     // The size of each item in the queue
                         &( ucQueueStorage[ 0 ] ), // The buffer that will␣
↪hold the items in the queue.
                         &xQueueBuffer ); // The buffer that will hold the␣
↪queue structure.

 // The queue is guaranteed to be created successfully as no dynamic memory
 // allocation is used.  Therefore xQueue1 is now a handle to a valid queue.

 // ... Rest of task code.
}
```

Parameters

- **uxQueueLength** –The maximum number of items that the queue can contain.
- **uxItemSize** –The number of bytes each item in the queue will require. Items are queued by copy, not by reference, so this is the number of bytes that will be copied for each posted item. Each item on the queue must be the same size.
- **pucQueueStorage** –If uxItemSize is not zero then pucQueueStorageBuffer must point to a uint8_t array that is at least large enough to hold the maximum number of items that can be in the queue at any one time - which is (uxQueueLength * uxItemsSize) bytes. If uxItemSize is zero then pucQueueStorageBuffer can be NULL.
- **pxQueueBuffer** –Must point to a variable of type StaticQueue_t, which will be used to hold the queue's data structure.

Returns If the queue is created then a handle to the created queue is returned. If pxQueueBuffer is NULL then NULL is returned.

xQueueSendToFront (xQueue, pvItemToQueue, xTicksToWait)

Post an item to the front of a queue. The item is queued by copy, not by reference. This function must not be called from an interrupt service routine. See xQueueSendFromISR () for an alternative which may be used in an ISR.

Example usage:

```
struct AMessage
{
 char ucMessageID;
 char ucData[ 20 ];
} xMessage;

uint32_t ulVar = 10UL;

void vATask( void *pvParameters )
{
QueueHandle_t xQueue1, xQueue2;
```

(continues on next page)

(continued from previous page)

```
struct AMessage *pxMessage;

 // Create a queue capable of containing 10 uint32_t values.
 xQueue1 = xQueueCreate( 10, sizeof( uint32_t ) );

 // Create a queue capable of containing 10 pointers to AMessage structures.
 // These should be passed by pointer as they contain a lot of data.
 xQueue2 = xQueueCreate( 10, sizeof( struct AMessage * ) );

 // ...

 if( xQueue1 != 0 )
 {
     // Send an uint32_t.  Wait for 10 ticks for space to become
     // available if necessary.
     if( xQueueSendToFront( xQueue1, ( void * ) &ulVar, ( TickType_t ) 10 ) !=␣
↪pdPASS )
     {
         // Failed to post the message, even after 10 ticks.
     }
 }

 if( xQueue2 != 0 )
 {
     // Send a pointer to a struct AMessage object.  Don't block if the
     // queue is already full.
     pxMessage = & xMessage;
     xQueueSendToFront( xQueue2, ( void * ) &pxMessage, ( TickType_t ) 0 );
 }

 // ... Rest of task code.
}
```

Parameters

- **xQueue** –The handle to the queue on which the item is to be posted.
- **pvItemToQueue** –A pointer to the item that is to be placed on the queue. The size of the items the queue will hold was defined when the queue was created, so this many bytes will be copied from pvItemToQueue into the queue storage area.
- **xTicksToWait** –The maximum amount of time the task should block waiting for space to become available on the queue, should it already be full. The call will return immediately if this is set to 0 and the queue is full. The time is defined in tick periods so the constant portTICK_PERIOD_MS should be used to convert to real time if this is required.

Returns pdTRUE if the item was successfully posted, otherwise errQUEUE_FULL.

xQueueSendToBack(xQueue, pvItemToQueue, xTicksToWait)

This is a macro that calls xQueueGenericSend().

Post an item to the back of a queue. The item is queued by copy, not by reference. This function must not be called from an interrupt service routine. See xQueueSendFromISR () for an alternative which may be used in an ISR.

Example usage:

```
struct AMessage
{
 char ucMessageID;
 char ucData[ 20 ];
} xMessage;
```

(continues on next page)

(continued from previous page)

```
uint32_t ulVar = 10UL;

void vATask( void *pvParameters )
{
QueueHandle_t xQueue1, xQueue2;
struct AMessage *pxMessage;

 // Create a queue capable of containing 10 uint32_t values.
 xQueue1 = xQueueCreate( 10, sizeof( uint32_t ) );

 // Create a queue capable of containing 10 pointers to AMessage structures.
 // These should be passed by pointer as they contain a lot of data.
 xQueue2 = xQueueCreate( 10, sizeof( struct AMessage * ) );

 // ...

 if( xQueue1 != 0 )
 {
     // Send an uint32_t.  Wait for 10 ticks for space to become
     // available if necessary.
     if( xQueueSendToBack( xQueue1, ( void * ) &ulVar, ( TickType_t ) 10 ) !=␣
↪pdPASS )
     {
         // Failed to post the message, even after 10 ticks.
     }
 }

 if( xQueue2 != 0 )
 {
     // Send a pointer to a struct AMessage object.  Don't block if the
     // queue is already full.
     pxMessage = & xMessage;
     xQueueSendToBack( xQueue2, ( void * ) &pxMessage, ( TickType_t ) 0 );
 }

 // ... Rest of task code.
}
```

Parameters

- **xQueue** –The handle to the queue on which the item is to be posted.
- **pvItemToQueue** –A pointer to the item that is to be placed on the queue. The size of the items the queue will hold was defined when the queue was created, so this many bytes will be copied from pvItemToQueue into the queue storage area.
- **xTicksToWait** –The maximum amount of time the task should block waiting for space to become available on the queue, should it already be full. The call will return immediately if this is set to 0 and the queue is full. The time is defined in tick periods so the constant portTICK_PERIOD_MS should be used to convert to real time if this is required.

Returns pdTRUE if the item was successfully posted, otherwise errQUEUE_FULL.

xQueueSend (xQueue, pvItemToQueue, xTicksToWait)

This is a macro that calls xQueueGenericSend(). It is included for backward compatibility with versions of FreeRTOS.org that did not include the xQueueSendToFront() and xQueueSendToBack() macros. It is equivalent to xQueueSendToBack().

Post an item on a queue. The item is queued by copy, not by reference. This function must not be called from an interrupt service routine. See xQueueSendFromISR () for an alternative which may be used in an ISR.

Example usage:

```
struct AMessage
{
 char ucMessageID;
 char ucData[ 20 ];
} xMessage;

uint32_t ulVar = 10UL;

void vATask( void *pvParameters )
{
QueueHandle_t xQueue1, xQueue2;
struct AMessage *pxMessage;

 // Create a queue capable of containing 10 uint32_t values.
 xQueue1 = xQueueCreate( 10, sizeof( uint32_t ) );

 // Create a queue capable of containing 10 pointers to AMessage structures.
 // These should be passed by pointer as they contain a lot of data.
 xQueue2 = xQueueCreate( 10, sizeof( struct AMessage * ) );

 // ...

 if( xQueue1 != 0 )
 {
     // Send an uint32_t.  Wait for 10 ticks for space to become
     // available if necessary.
     if( xQueueSend( xQueue1, ( void * ) &ulVar, ( TickType_t ) 10 ) != pdPASS␣
↪)
     {
         // Failed to post the message, even after 10 ticks.
     }
 }

 if( xQueue2 != 0 )
 {
     // Send a pointer to a struct AMessage object.  Don't block if the
     // queue is already full.
     pxMessage = & xMessage;
     xQueueSend( xQueue2, ( void * ) &pxMessage, ( TickType_t ) 0 );
 }

 // ... Rest of task code.
}
```

Parameters

- **`xQueue`** –The handle to the queue on which the item is to be posted.
- **`pvItemToQueue`** –A pointer to the item that is to be placed on the queue. The size of the items the queue will hold was defined when the queue was created, so this many bytes will be copied from pvItemToQueue into the queue storage area.
- **`xTicksToWait`** –The maximum amount of time the task should block waiting for space to become available on the queue, should it already be full. The call will return immediately if this is set to 0 and the queue is full. The time is defined in tick periods so the constant portTICK_PERIOD_MS should be used to convert to real time if this is required.

Returns pdTRUE if the item was successfully posted, otherwise errQUEUE_FULL.

`xQueueOverwrite`(xQueue, pvItemToQueue)

Only for use with queues that have a length of one - so the queue is either empty or full.

Post an item on a queue. If the queue is already full then overwrite the value held in the queue. The item is queued by copy, not by reference.

This function must not be called from an interrupt service routine. See xQueueOverwriteFromISR () for an alternative which may be used in an ISR.

Example usage:

```
void vFunction( void *pvParameters )
{
QueueHandle_t xQueue;
uint32_t ulVarToSend, ulValReceived;

 // Create a queue to hold one uint32_t value.  It is strongly
 // recommended *not* to use xQueueOverwrite() on queues that can
 // contain more than one value, and doing so will trigger an assertion
 // if configASSERT() is defined.
 xQueue = xQueueCreate( 1, sizeof( uint32_t ) );

 // Write the value 10 to the queue using xQueueOverwrite().
 ulVarToSend = 10;
 xQueueOverwrite( xQueue, &ulVarToSend );

 // Peeking the queue should now return 10, but leave the value 10 in
 // the queue.  A block time of zero is used as it is known that the
 // queue holds a value.
 ulValReceived = 0;
 xQueuePeek( xQueue, &ulValReceived, 0 );

 if( ulValReceived != 10 )
 {
     // Error unless the item was removed by a different task.
 }

 // The queue is still full.  Use xQueueOverwrite() to overwrite the
 // value held in the queue with 100.
 ulVarToSend = 100;
 xQueueOverwrite( xQueue, &ulVarToSend );

 // This time read from the queue, leaving the queue empty once more.
 // A block time of 0 is used again.
 xQueueReceive( xQueue, &ulValReceived, 0 );

 // The value read should be the last value written, even though the
 // queue was already full when the value was written.
 if( ulValReceived != 100 )
 {
     // Error!
 }

 // ...
}
```

Parameters

- **`xQueue`** –The handle of the queue to which the data is being sent.
- **`pvItemToQueue`** –A pointer to the item that is to be placed on the queue. The size of the items the queue will hold was defined when the queue was created, so this many bytes will be copied from pvItemToQueue into the queue storage area.

Returns xQueueOverwrite() is a macro that calls xQueueGenericSend(), and therefore has the same return values as xQueueSendToFront(). However, pdPASS is the only value that can be returned because xQueueOverwrite() will write to the queue even when the queue is already full.

xQueueSendToFrontFromISR (xQueue, pvItemToQueue, pxHigherPriorityTaskWoken)

This is a macro that calls xQueueGenericSendFromISR().

Post an item to the front of a queue. It is safe to use this macro from within an interrupt service routine.

Items are queued by copy not reference so it is preferable to only queue small items, especially when called from an ISR. In most cases it would be preferable to store a pointer to the item being queued.

Example usage for buffered IO (where the ISR can obtain more than one value per call):

```
void vBufferISR( void )
{
char cIn;
BaseType_t xHigherPrioritTaskWoken;

 // We have not woken a task at the start of the ISR.
 xHigherPriorityTaskWoken = pdFALSE;

 // Loop until the buffer is empty.
 do
 {
     // Obtain a byte from the buffer.
     cIn = portINPUT_BYTE( RX_REGISTER_ADDRESS );

     // Post the byte.
     xQueueSendToFrontFromISR( xRxQueue, &cIn, &xHigherPriorityTaskWoken );

 } while( portINPUT_BYTE( BUFFER_COUNT ) );

 // Now the buffer is empty we can switch context if necessary.
 if( xHigherPriorityTaskWoken )
 {
     portYIELD_FROM_ISR ();
 }
}
```

Parameters

- **xQueue** –The handle to the queue on which the item is to be posted.
- **pvItemToQueue** –A pointer to the item that is to be placed on the queue. The size of the items the queue will hold was defined when the queue was created, so this many bytes will be copied from pvItemToQueue into the queue storage area.
- **pxHigherPriorityTaskWoken** –**[out]** xQueueSendToFrontFromISR() will set *pxHigherPriorityTaskWoken to pdTRUE if sending to the queue caused a task to unblock, and the unblocked task has a priority higher than the currently running task. If xQueueSendToFromFromISR() sets this value to pdTRUE then a context switch should be requested before the interrupt is exited.

Returns pdTRUE if the data was successfully sent to the queue, otherwise errQUEUE_FULL.

xQueueSendToBackFromISR (xQueue, pvItemToQueue, pxHigherPriorityTaskWoken)

This is a macro that calls xQueueGenericSendFromISR().

Post an item to the back of a queue. It is safe to use this macro from within an interrupt service routine.

Items are queued by copy not reference so it is preferable to only queue small items, especially when called from an ISR. In most cases it would be preferable to store a pointer to the item being queued.

Example usage for buffered IO (where the ISR can obtain more than one value per call):

```
void vBufferISR( void )
{
char cIn;
BaseType_t xHigherPriorityTaskWoken;

 // We have not woken a task at the start of the ISR.
 xHigherPriorityTaskWoken = pdFALSE;

 // Loop until the buffer is empty.
 do
 {
     // Obtain a byte from the buffer.
     cIn = portINPUT_BYTE( RX_REGISTER_ADDRESS );

     // Post the byte.
     xQueueSendToBackFromISR( xRxQueue, &cIn, &xHigherPriorityTaskWoken );

 } while( portINPUT_BYTE( BUFFER_COUNT ) );

 // Now the buffer is empty we can switch context if necessary.
 if( xHigherPriorityTaskWoken )
 {
     portYIELD_FROM_ISR ();
 }
}
```

Parameters

- **xQueue** –The handle to the queue on which the item is to be posted.
- **pvItemToQueue** –A pointer to the item that is to be placed on the queue. The size of the items the queue will hold was defined when the queue was created, so this many bytes will be copied from pvItemToQueue into the queue storage area.
- **pxHigherPriorityTaskWoken** –**[out]** xQueueSendToBackFromISR() will set *pxHigherPriorityTaskWoken to pdTRUE if sending to the queue caused a task to unblock, and the unblocked task has a priority higher than the currently running task. If xQueueSendToBackFromISR() sets this value to pdTRUE then a context switch should be requested before the interrupt is exited.

Returns pdTRUE if the data was successfully sent to the queue, otherwise errQUEUE_FULL.

xQueueOverwriteFromISR(xQueue, pvItemToQueue, pxHigherPriorityTaskWoken)

A version of xQueueOverwrite() that can be used in an interrupt service routine (ISR).

Only for use with queues that can hold a single item - so the queue is either empty or full.

Post an item on a queue. If the queue is already full then overwrite the value held in the queue. The item is queued by copy, not by reference.

Example usage:

```
QueueHandle_t xQueue;

void vFunction( void *pvParameters )
{
 // Create a queue to hold one uint32_t value.  It is strongly
 // recommended *not* to use xQueueOverwriteFromISR() on queues that can
 // contain more than one value, and doing so will trigger an assertion
 // if configASSERT() is defined.
 xQueue = xQueueCreate( 1, sizeof( uint32_t ) );
}
```

(continues on next page)

(continued from previous page)

```
void vAnInterruptHandler( void )
{
// xHigherPriorityTaskWoken must be set to pdFALSE before it is used.
BaseType_t xHigherPriorityTaskWoken = pdFALSE;
uint32_t ulVarToSend, ulValReceived;

 // Write the value 10 to the queue using xQueueOverwriteFromISR().
 ulVarToSend = 10;
 xQueueOverwriteFromISR( xQueue, &ulVarToSend, &xHigherPriorityTaskWoken );

 // The queue is full, but calling xQueueOverwriteFromISR() again will still
 // pass because the value held in the queue will be overwritten with the
 // new value.
 ulVarToSend = 100;
 xQueueOverwriteFromISR( xQueue, &ulVarToSend, &xHigherPriorityTaskWoken );

 // Reading from the queue will now return 100.

 // ...

 if( xHigherPrioritytaskWoken == pdTRUE )
 {
     // Writing to the queue caused a task to unblock and the unblocked task
     // has a priority higher than or equal to the priority of the currently
     // executing task (the task this interrupt interrupted).  Perform a␣
↪context
     // switch so this interrupt returns directly to the unblocked task.
     portYIELD_FROM_ISR(); // or portEND_SWITCHING_ISR() depending on the port.
 }
}
```

Parameters

- **xQueue** –The handle to the queue on which the item is to be posted.
- **pvItemToQueue** –A pointer to the item that is to be placed on the queue. The size of the items the queue will hold was defined when the queue was created, so this many bytes will be copied from pvItemToQueue into the queue storage area.
- **pxHigherPriorityTaskWoken** –**[out]** xQueueOverwriteFromISR() will set *pxHigherPriorityTaskWoken to pdTRUE if sending to the queue caused a task to unblock, and the unblocked task has a priority higher than the currently running task. If xQueueOverwriteFromISR() sets this value to pdTRUE then a context switch should be requested before the interrupt is exited.

Returns xQueueOverwriteFromISR() is a macro that calls xQueueGenericSendFromISR(), and therefore has the same return values as xQueueSendToFrontFromISR(). However, pdPASS is the only value that can be returned because xQueueOverwriteFromISR() will write to the queue even when the queue is already full.

xQueueSendFromISR(xQueue, pvItemToQueue, pxHigherPriorityTaskWoken)

This is a macro that calls xQueueGenericSendFromISR(). It is included for backward compatibility with versions of FreeRTOS.org that did not include the xQueueSendToBackFromISR() and xQueueSendToFrontFromISR() macros.

Post an item to the back of a queue. It is safe to use this function from within an interrupt service routine.

Items are queued by copy not reference so it is preferable to only queue small items, especially when called from an ISR. In most cases it would be preferable to store a pointer to the item being queued.

Example usage for buffered IO (where the ISR can obtain more than one value per call):

```
void vBufferISR( void )
{
char cIn;
BaseType_t xHigherPriorityTaskWoken;

 // We have not woken a task at the start of the ISR.
 xHigherPriorityTaskWoken = pdFALSE;

 // Loop until the buffer is empty.
 do
 {
     // Obtain a byte from the buffer.
     cIn = portINPUT_BYTE( RX_REGISTER_ADDRESS );

     // Post the byte.
     xQueueSendFromISR( xRxQueue, &cIn, &xHigherPriorityTaskWoken );

 } while( portINPUT_BYTE( BUFFER_COUNT ) );

 // Now the buffer is empty we can switch context if necessary.
 if( xHigherPriorityTaskWoken )
 {
     // Actual macro used here is port specific.
     portYIELD_FROM_ISR ();
 }
}
```

Parameters

- **xQueue** –The handle to the queue on which the item is to be posted.
- **pvItemToQueue** –A pointer to the item that is to be placed on the queue. The size of the items the queue will hold was defined when the queue was created, so this many bytes will be copied from pvItemToQueue into the queue storage area.
- **pxHigherPriorityTaskWoken** –**[out]** xQueueSendFromISR() will set *pxHigherPriorityTaskWoken to pdTRUE if sending to the queue caused a task to unblock, and the unblocked task has a priority higher than the currently running task. If xQueueSendFromISR() sets this value to pdTRUE then a context switch should be requested before the interrupt is exited.

Returns pdTRUE if the data was successfully sent to the queue, otherwise errQUEUE_FULL.

xQueueReset(xQueue)

Reset a queue back to its original empty state. The return value is now obsolete and is always set to pdPASS.

Type Definitions

typedef struct QueueDefinition ***QueueHandle_t**

typedef struct QueueDefinition ***QueueSetHandle_t**

Type by which queue sets are referenced. For example, a call to xQueueCreateSet() returns an xQueueSet variable that can then be used as a parameter to xQueueSelectFromSet(), xQueueAddToSet(), etc.

typedef struct QueueDefinition ***QueueSetMemberHandle_t**

Queue sets can contain both queues and semaphores, so the QueueSetMemberHandle_t is defined as a type to be used where a parameter or return value can be either an QueueHandle_t or an SemaphoreHandle_t.

Semaphore API

Header File

- components/freertos/include/freertos/semphr.h

Macros

semBINARY_SEMAPHORE_QUEUE_LENGTH

semSEMAPHORE_QUEUE_ITEM_LENGTH

semGIVE_BLOCK_TIME

vSemaphoreCreateBinary(xSemaphore)

xSemaphoreCreateBinary()

Creates a new binary semaphore instance, and returns a handle by which the new semaphore can be referenced.

In many usage scenarios it is faster and more memory efficient to use a direct to task notification in place of a binary semaphore! https://www.FreeRTOS.org/RTOS-task-notifications.html

Internally, within the FreeRTOS implementation, binary semaphores use a block of memory, in which the semaphore structure is stored. If a binary semaphore is created using xSemaphoreCreateBinary() then the required memory is automatically dynamically allocated inside the xSemaphoreCreateBinary() function. (see https://www.FreeRTOS.org/a00111.html). If a binary semaphore is created using xSemaphoreCreateBinaryStatic() then the application writer must provide the memory. xSemaphoreCreateBinaryStatic() therefore allows a binary semaphore to be created without using any dynamic memory allocation.

The old vSemaphoreCreateBinary() macro is now deprecated in favour of this xSemaphoreCreateBinary() function. Note that binary semaphores created using the vSemaphoreCreateBinary() macro are created in a state such that the first call to 'take' the semaphore would pass, whereas binary semaphores created using xSemaphoreCreateBinary() are created in a state such that the the semaphore must first be 'given' before it can be 'taken'.

This type of semaphore can be used for pure synchronisation between tasks or between an interrupt and a task. The semaphore need not be given back once obtained, so one task/interrupt can continuously 'give' the semaphore while another continuously 'takes' the semaphore. For this reason this type of semaphore does not use a priority inheritance mechanism. For an alternative that does use priority inheritance see xSemaphoreCreateMutex().

Example usage:

```
SemaphoreHandle_t xSemaphore = NULL;

void vATask( void * pvParameters )
{
 // Semaphore cannot be used before a call to vSemaphoreCreateBinary().
 // This is a macro so pass the variable in directly.
 xSemaphore = xSemaphoreCreateBinary();

 if( xSemaphore != NULL )
 {
     // The semaphore was created successfully.
     // The semaphore can now be used.
 }
}
```

Returns Handle to the created semaphore, or NULL if the memory required to hold the semaphore's data structures could not be allocated.

xSemaphoreCreateBinaryStatic (pxStaticSemaphore)

Creates a new binary semaphore instance, and returns a handle by which the new semaphore can be referenced.

NOTE: In many usage scenarios it is faster and more memory efficient to use a direct to task notification in place of a binary semaphore! https://www.FreeRTOS.org/RTOS-task-notifications.html

Internally, within the FreeRTOS implementation, binary semaphores use a block of memory, in which the semaphore structure is stored. If a binary semaphore is created using xSemaphoreCreateBinary() then the required memory is automatically dynamically allocated inside the xSemaphoreCreateBinary() function. (see https://www.FreeRTOS.org/a00111.html). If a binary semaphore is created using xSemaphoreCreateBinaryStatic() then the application writer must provide the memory. xSemaphoreCreateBinaryStatic() therefore allows a binary semaphore to be created without using any dynamic memory allocation.

This type of semaphore can be used for pure synchronisation between tasks or between an interrupt and a task. The semaphore need not be given back once obtained, so one task/interrupt can continuously 'give' the semaphore while another continuously 'takes' the semaphore. For this reason this type of semaphore does not use a priority inheritance mechanism. For an alternative that does use priority inheritance see xSemaphoreCreateMutex().

Example usage:

```
SemaphoreHandle_t xSemaphore = NULL;
StaticSemaphore_t xSemaphoreBuffer;

void vATask( void * pvParameters )
{
 // Semaphore cannot be used before a call to xSemaphoreCreateBinary() or
 // xSemaphoreCreateBinaryStatic().
 // The semaphore's data structures will be placed in the xSemaphoreBuffer
 // variable, the address of which is passed into the function.  The
 // function's parameter is not NULL, so the function will not attempt any
 // dynamic memory allocation, and therefore the function will not return
 // return NULL.
 xSemaphore = xSemaphoreCreateBinaryStatic( &xSemaphoreBuffer );

 // Rest of task code goes here.
}
```

Parameters

- **pxStaticSemaphore** –Must point to a variable of type StaticSemaphore_t, which will then be used to hold the semaphore's data structure, removing the need for the memory to be allocated dynamically.

Returns If the semaphore is created then a handle to the created semaphore is returned. If pxSemaphoreBuffer is NULL then NULL is returned.

xSemaphoreTake (xSemaphore, xBlockTime)

Macro to obtain a semaphore. The semaphore must have previously been created with a call to xSemaphoreCreateBinary(), xSemaphoreCreateMutex() or xSemaphoreCreateCounting().

param xSemaphore A handle to the semaphore being taken - obtained when the semaphore was created.

param xBlockTime The time in ticks to wait for the semaphore to become available. The macro portTICK_PERIOD_MS can be used to convert this to a real time. A block time of zero can be used to poll the semaphore. A block time of portMAX_DELAY can be used to block indefinitely (provided INCLUDE_vTaskSuspend is set to 1 in FreeRTOSConfig.h).

Example usage:

```
SemaphoreHandle_t xSemaphore = NULL;

// A task that creates a semaphore.
void vATask( void * pvParameters )
{
 // Create the semaphore to guard a shared resource.
 vSemaphoreCreateBinary( xSemaphore );
}

// A task that uses the semaphore.
void vAnotherTask( void * pvParameters )
{
 // ... Do other things.

 if( xSemaphore != NULL )
 {
     // See if we can obtain the semaphore.  If the semaphore is not available
     // wait 10 ticks to see if it becomes free.
     if( xSemaphoreTake( xSemaphore, ( TickType_t ) 10 ) == pdTRUE )
     {
         // We were able to obtain the semaphore and can now access the
         // shared resource.

         // ...

         // We have finished accessing the shared resource.  Release the
         // semaphore.
         xSemaphoreGive( xSemaphore );
     }
     else
     {
         // We could not obtain the semaphore and can therefore not access
         // the shared resource safely.
     }
 }
}
```

Returns pdTRUE if the semaphore was obtained. pdFALSE if xBlockTime expired without the semaphore becoming available.

xSemaphoreTakeRecursive(xMutex, xBlockTime)

Macro to recursively obtain, or 'take', a mutex type semaphore. The mutex must have previously been created using a call to xSemaphoreCreateRecursiveMutex();

configUSE_RECURSIVE_MUTEXES must be set to 1 in FreeRTOSConfig.h for this macro to be available.

This macro must not be used on mutexes created using xSemaphoreCreateMutex().

A mutex used recursively can be 'taken' repeatedly by the owner. The mutex doesn't become available again until the owner has called xSemaphoreGiveRecursive() for each successful 'take' request. For example, if a task successfully 'takes' the same mutex 5 times then the mutex will not be available to any other task until it has also 'given' the mutex back exactly five times.

Example usage:

```
SemaphoreHandle_t xMutex = NULL;

// A task that creates a mutex.
void vATask( void * pvParameters )
{
```

(continues on next page)

(continued from previous page)

```
 // Create the mutex to guard a shared resource.
 xMutex = xSemaphoreCreateRecursiveMutex();
}

// A task that uses the mutex.
void vAnotherTask( void * pvParameters )
{
 // ... Do other things.

 if( xMutex != NULL )
 {
     // See if we can obtain the mutex.  If the mutex is not available
     // wait 10 ticks to see if it becomes free.
     if( xSemaphoreTakeRecursive( xSemaphore, ( TickType_t ) 10 ) == pdTRUE )
     {
         // We were able to obtain the mutex and can now access the
         // shared resource.

         // ...
         // For some reason due to the nature of the code further calls to
         // xSemaphoreTakeRecursive() are made on the same mutex.  In real
         // code these would not be just sequential calls as this would make
         // no sense.  Instead the calls are likely to be buried inside
         // a more complex call structure.
         xSemaphoreTakeRecursive( xMutex, ( TickType_t ) 10 );
         xSemaphoreTakeRecursive( xMutex, ( TickType_t ) 10 );

         // The mutex has now been 'taken' three times, so will not be
         // available to another task until it has also been given back
         // three times.  Again it is unlikely that real code would have
         // these calls sequentially, but instead buried in a more complex
         // call structure.  This is just for illustrative purposes.
         xSemaphoreGiveRecursive( xMutex );
         xSemaphoreGiveRecursive( xMutex );
         xSemaphoreGiveRecursive( xMutex );

         // Now the mutex can be taken by other tasks.
     }
     else
     {
         // We could not obtain the mutex and can therefore not access
         // the shared resource safely.
     }
 }
}
```

Parameters

- **xMutex** –A handle to the mutex being obtained. This is the handle returned by xSemaphoreCreateRecursiveMutex();
- **xBlockTime** –The time in ticks to wait for the semaphore to become available. The macro portTICK_PERIOD_MS can be used to convert this to a real time. A block time of zero can be used to poll the semaphore. If the task already owns the semaphore then xSemaphoreTakeRecursive() will return immediately no matter what the value of xBlockTime.

Returns pdTRUE if the semaphore was obtained. pdFALSE if xBlockTime expired without the semaphore becoming available.

xSemaphoreGive(xSemaphore)

Macro to release a semaphore. The semaphore must have previously been created with a call to xSemaphoreCreateBinary(), xSemaphoreCreateMutex() or xSemaphoreCreateCounting(). and obtained us-

ing sSemaphoreTake().

This macro must not be used from an ISR. See xSemaphoreGiveFromISR () for an alternative which can be used from an ISR.

This macro must also not be used on semaphores created using xSemaphoreCreateRecursiveMutex().

Example usage:

```
SemaphoreHandle_t xSemaphore = NULL;

void vATask( void * pvParameters )
{
 // Create the semaphore to guard a shared resource.
 vSemaphoreCreateBinary( xSemaphore );

 if( xSemaphore != NULL )
 {
     if( xSemaphoreGive( xSemaphore ) != pdTRUE )
     {
         // We would expect this call to fail because we cannot give
         // a semaphore without first "taking" it!
     }

     // Obtain the semaphore - don't block if the semaphore is not
     // immediately available.
     if( xSemaphoreTake( xSemaphore, ( TickType_t ) 0 ) )
     {
         // We now have the semaphore and can access the shared resource.

         // ...

         // We have finished accessing the shared resource so can free the
         // semaphore.
         if( xSemaphoreGive( xSemaphore ) != pdTRUE )
         {
             // We would not expect this call to fail because we must have
             // obtained the semaphore to get here.
         }
     }
 }
}
```

Parameters

- **`xSemaphore`** –A handle to the semaphore being released. This is the handle returned when the semaphore was created.

Returns pdTRUE if the semaphore was released. pdFALSE if an error occurred. Semaphores are implemented using queues. An error can occur if there is no space on the queue to post a message - indicating that the semaphore was not first obtained correctly.

`xSemaphoreGiveRecursive`(xMutex)

Macro to recursively release, or ‘give’, a mutex type semaphore. The mutex must have previously been created using a call to xSemaphoreCreateRecursiveMutex();

configUSE_RECURSIVE_MUTEXES must be set to 1 in FreeRTOSConfig.h for this macro to be available.

This macro must not be used on mutexes created using xSemaphoreCreateMutex().

A mutex used recursively can be ‘taken’ repeatedly by the owner. The mutex doesn’t become available again until the owner has called xSemaphoreGiveRecursive() for each successful ‘take’ request. For example, if a task successfully ‘takes’ the same mutex 5 times then the mutex will not be available to any other task until it has also ‘given’ the mutex back exactly five times.

Example usage:

```
SemaphoreHandle_t xMutex = NULL;

// A task that creates a mutex.
void vATask( void * pvParameters )
{
 // Create the mutex to guard a shared resource.
 xMutex = xSemaphoreCreateRecursiveMutex();
}

// A task that uses the mutex.
void vAnotherTask( void * pvParameters )
{
 // ... Do other things.

 if( xMutex != NULL )
 {
     // See if we can obtain the mutex.  If the mutex is not available
     // wait 10 ticks to see if it becomes free.
     if( xSemaphoreTakeRecursive( xMutex, ( TickType_t ) 10 ) == pdTRUE )
     {
         // We were able to obtain the mutex and can now access the
         // shared resource.

         // ...
         // For some reason due to the nature of the code further calls to
         // xSemaphoreTakeRecursive() are made on the same mutex.  In real
         // code these would not be just sequential calls as this would make
         // no sense.  Instead the calls are likely to be buried inside
         // a more complex call structure.
         xSemaphoreTakeRecursive( xMutex, ( TickType_t ) 10 );
         xSemaphoreTakeRecursive( xMutex, ( TickType_t ) 10 );

         // The mutex has now been 'taken' three times, so will not be
         // available to another task until it has also been given back
         // three times.  Again it is unlikely that real code would have
         // these calls sequentially, it would be more likely that the calls
         // to xSemaphoreGiveRecursive() would be called as a call stack
         // unwound.  This is just for demonstrative purposes.
         xSemaphoreGiveRecursive( xMutex );
         xSemaphoreGiveRecursive( xMutex );
         xSemaphoreGiveRecursive( xMutex );

         // Now the mutex can be taken by other tasks.
     }
     else
     {
         // We could not obtain the mutex and can therefore not access
         // the shared resource safely.
     }
 }
}
```

Parameters

- **xMutex** –A handle to the mutex being released, or ‘given’. This is the handle returned by xSemaphoreCreateMutex();

Returns pdTRUE if the semaphore was given.

xSemaphoreGiveFromISR (xSemaphore, pxHigherPriorityTaskWoken)

Macro to release a semaphore. The semaphore must have previously been created with a call to xSemaphoreCreateBinary() or xSemaphoreCreateCounting().

Mutex type semaphores (those created using a call to xSemaphoreCreateMutex()) must not be used with this macro.

This macro can be used from an ISR.

Example usage:

```
#define LONG_TIME 0xffff
#define TICKS_TO_WAIT  10
SemaphoreHandle_t xSemaphore = NULL;

// Repetitive task.
void vATask( void * pvParameters )
{
 for( ;; )
 {
     // We want this task to run every 10 ticks of a timer.  The semaphore
     // was created before this task was started.

     // Block waiting for the semaphore to become available.
     if( xSemaphoreTake( xSemaphore, LONG_TIME ) == pdTRUE )
     {
         // It is time to execute.

         // ...

         // We have finished our task.  Return to the top of the loop where
         // we will block on the semaphore until it is time to execute
         // again.  Note when using the semaphore for synchronisation with an
         // ISR in this manner there is no need to 'give' the semaphore back.
     }
 }
}

// Timer ISR
void vTimerISR( void * pvParameters )
{
static uint8_t ucLocalTickCount = 0;
static BaseType_t xHigherPriorityTaskWoken;

 // A timer tick has occurred.

 // ... Do other time functions.

 // Is it time for vATask () to run?
 xHigherPriorityTaskWoken = pdFALSE;
 ucLocalTickCount++;
 if( ucLocalTickCount >= TICKS_TO_WAIT )
 {
     // Unblock the task by releasing the semaphore.
     xSemaphoreGiveFromISR( xSemaphore, &xHigherPriorityTaskWoken );

     // Reset the count so we release the semaphore again in 10 ticks time.
     ucLocalTickCount = 0;
 }

 if( xHigherPriorityTaskWoken != pdFALSE )
 {
     // We can force a context switch here.  Context switching from an
```

(continues on next page)

(continued from previous page)

```
    // ISR uses port specific syntax.  Check the demo task for your port
    // to find the syntax required.
 }
}
```

Parameters

- **xSemaphore** –A handle to the semaphore being released. This is the handle returned when the semaphore was created.
- **pxHigherPriorityTaskWoken** –xSemaphoreGiveFromISR() will set *pxHigherPriorityTaskWoken to pdTRUE if giving the semaphore caused a task to unblock, and the unblocked task has a priority higher than the currently running task. If xSemaphoreGiveFromISR() sets this value to pdTRUE then a context switch should be requested before the interrupt is exited.

Returns pdTRUE if the semaphore was successfully given, otherwise errQUEUE_FULL.

xSemaphoreTakeFromISR(xSemaphore, pxHigherPriorityTaskWoken)

Macro to take a semaphore from an ISR. The semaphore must have previously been created with a call to xSemaphoreCreateBinary() or xSemaphoreCreateCounting().

Mutex type semaphores (those created using a call to xSemaphoreCreateMutex()) must not be used with this macro.

This macro can be used from an ISR, however taking a semaphore from an ISR is not a common operation. It is likely to only be useful when taking a counting semaphore when an interrupt is obtaining an object from a resource pool (when the semaphore count indicates the number of resources available).

Parameters

- **xSemaphore** –A handle to the semaphore being taken. This is the handle returned when the semaphore was created.
- **pxHigherPriorityTaskWoken** –**[out]** xSemaphoreTakeFromISR() will set *pxHigherPriorityTaskWoken to pdTRUE if taking the semaphore caused a task to unblock, and the unblocked task has a priority higher than the currently running task. If xSemaphoreTakeFromISR() sets this value to pdTRUE then a context switch should be requested before the interrupt is exited.

Returns pdTRUE if the semaphore was successfully taken, otherwise pdFALSE

xSemaphoreCreateMutex()

Creates a new mutex type semaphore instance, and returns a handle by which the new mutex can be referenced.

Internally, within the FreeRTOS implementation, mutex semaphores use a block of memory, in which the mutex structure is stored. If a mutex is created using xSemaphoreCreateMutex() then the required memory is automatically dynamically allocated inside the xSemaphoreCreateMutex() function. (see https://www.FreeRTOS.org/a00111.html). If a mutex is created using xSemaphoreCreateMutexStatic() then the application writer must provided the memory. xSemaphoreCreateMutexStatic() therefore allows a mutex to be created without using any dynamic memory allocation.

Mutexes created using this function can be accessed using the xSemaphoreTake() and xSemaphoreGive() macros. The xSemaphoreTakeRecursive() and xSemaphoreGiveRecursive() macros must not be used.

This type of semaphore uses a priority inheritance mechanism so a task ‘taking’ a semaphore MUST ALWAYS ‘give’ the semaphore back once the semaphore it is no longer required.

Mutex type semaphores cannot be used from within interrupt service routines.

See xSemaphoreCreateBinary() for an alternative implementation that can be used for pure synchronisation (where one task or interrupt always ‘gives’ the semaphore and another always ‘takes’ the semaphore) and from within interrupt service routines.

Example usage:

```
SemaphoreHandle_t xSemaphore;

void vATask( void * pvParameters )
{
 // Semaphore cannot be used before a call to xSemaphoreCreateMutex().
 // This is a macro so pass the variable in directly.
 xSemaphore = xSemaphoreCreateMutex();

 if( xSemaphore != NULL )
 {
     // The semaphore was created successfully.
     // The semaphore can now be used.
 }
}
```

Returns If the mutex was successfully created then a handle to the created semaphore is returned. If there was not enough heap to allocate the mutex data structures then NULL is returned.

xSemaphoreCreateMutexStatic(pxMutexBuffer)

Creates a new mutex type semaphore instance, and returns a handle by which the new mutex can be referenced.

Internally, within the FreeRTOS implementation, mutex semaphores use a block of memory, in which the mutex structure is stored. If a mutex is created using xSemaphoreCreateMutex() then the required memory is automatically dynamically allocated inside the xSemaphoreCreateMutex() function. (see https://www.FreeRTOS.org/a00111.html). If a mutex is created using xSemaphoreCreateMutexStatic() then the application writer must provided the memory. xSemaphoreCreateMutexStatic() therefore allows a mutex to be created without using any dynamic memory allocation.

Mutexes created using this function can be accessed using the xSemaphoreTake() and xSemaphoreGive() macros. The xSemaphoreTakeRecursive() and xSemaphoreGiveRecursive() macros must not be used.

This type of semaphore uses a priority inheritance mechanism so a task 'taking' a semaphore MUST ALWAYS 'give' the semaphore back once the semaphore it is no longer required.

Mutex type semaphores cannot be used from within interrupt service routines.

See xSemaphoreCreateBinary() for an alternative implementation that can be used for pure synchronisation (where one task or interrupt always 'gives' the semaphore and another always 'takes' the semaphore) and from within interrupt service routines.

Example usage:

```
SemaphoreHandle_t xSemaphore;
StaticSemaphore_t xMutexBuffer;

void vATask( void * pvParameters )
{
 // A mutex cannot be used before it has been created.  xMutexBuffer is
 // into xSemaphoreCreateMutexStatic() so no dynamic memory allocation is
 // attempted.
 xSemaphore = xSemaphoreCreateMutexStatic( &xMutexBuffer );

 // As no dynamic memory allocation was performed, xSemaphore cannot be NULL,
 // so there is no need to check it.
}
```

Parameters

- **pxMutexBuffer** –Must point to a variable of type StaticSemaphore_t, which will be used to hold the mutex's data structure, removing the need for the memory to be allocated dynamically.

Returns If the mutex was successfully created then a handle to the created mutex is returned. If pxMutexBuffer was NULL then NULL is returned.

xSemaphoreCreateRecursiveMutex()

Creates a new recursive mutex type semaphore instance, and returns a handle by which the new recursive mutex can be referenced.

Internally, within the FreeRTOS implementation, recursive mutexs use a block of memory, in which the mutex structure is stored. If a recursive mutex is created using xSemaphoreCreateRecursiveMutex() then the required memory is automatically dynamically allocated inside the xSemaphoreCreateRecursiveMutex() function. (see http://www.freertos.org/a00111.html). If a recursive mutex is created using xSemaphoreCreateRecursiveMutexStatic() then the application writer must provide the memory that will get used by the mutex. xSemaphoreCreateRecursiveMutexStatic() therefore allows a recursive mutex to be created without using any dynamic memory allocation.

Mutexes created using this macro can be accessed using the xSemaphoreTakeRecursive() and xSemaphoreGiveRecursive() macros. The xSemaphoreTake() and xSemaphoreGive() macros must not be used.

A mutex used recursively can be 'taken' repeatedly by the owner. The mutex doesn't become available again until the owner has called xSemaphoreGiveRecursive() for each successful 'take' request. For example, if a task successfully 'takes' the same mutex 5 times then the mutex will not be available to any other task until it has also 'given' the mutex back exactly five times.

This type of semaphore uses a priority inheritance mechanism so a task 'taking' a semaphore MUST ALWAYS 'give' the semaphore back once the semaphore it is no longer required.

Mutex type semaphores cannot be used from within interrupt service routines.

See vSemaphoreCreateBinary() for an alternative implementation that can be used for pure synchronisation (where one task or interrupt always 'gives' the semaphore and another always 'takes' the semaphore) and from within interrupt service routines.

Example usage:

```
SemaphoreHandle_t xSemaphore;

void vATask( void * pvParameters )
{
   // Semaphore cannot be used before a call to xSemaphoreCreateMutex().
   // This is a macro so pass the variable in directly.
   xSemaphore = xSemaphoreCreateRecursiveMutex();

   if( xSemaphore != NULL )
   {
       // The semaphore was created successfully.
       // The semaphore can now be used.
   }
}
```

Returns xSemaphore Handle to the created mutex semaphore. Should be of type SemaphoreHandle_t.

xSemaphoreCreateRecursiveMutexStatic(pxStaticSemaphore)

Creates a new recursive mutex type semaphore instance, and returns a handle by which the new recursive mutex can be referenced.

Internally, within the FreeRTOS implementation, recursive mutexs use a block of memory, in which the mutex structure is stored. If a recursive mutex is created using xSemaphoreCreateRecursiveMutex() then the required memory is automatically dynamically allocated inside the xSemaphoreCreateRecursiveMutex() function. (see https://www.FreeRTOS.org/a00111.html). If a recursive mutex is created using xSemaphoreCreateRecursiveMutexStatic() then the application writer must provide the memory that will get used by the mutex.

xSemaphoreCreateRecursiveMutexStatic() therefore allows a recursive mutex to be created without using any dynamic memory allocation.

Mutexes created using this macro can be accessed using the xSemaphoreTakeRecursive() and xSemaphoreGiveRecursive() macros. The xSemaphoreTake() and xSemaphoreGive() macros must not be used.

A mutex used recursively can be 'taken' repeatedly by the owner. The mutex doesn't become available again until the owner has called xSemaphoreGiveRecursive() for each successful 'take' request. For example, if a task successfully 'takes' the same mutex 5 times then the mutex will not be available to any other task until it has also 'given' the mutex back exactly five times.

This type of semaphore uses a priority inheritance mechanism so a task 'taking' a semaphore MUST ALWAYS 'give' the semaphore back once the semaphore it is no longer required.

Mutex type semaphores cannot be used from within interrupt service routines.

See xSemaphoreCreateBinary() for an alternative implementation that can be used for pure synchronisation (where one task or interrupt always 'gives' the semaphore and another always 'takes' the semaphore) and from within interrupt service routines.

Example usage:

```
SemaphoreHandle_t xSemaphore;
StaticSemaphore_t xMutexBuffer;

void vATask( void * pvParameters )
{
   // A recursive semaphore cannot be used before it is created.  Here a
   // recursive mutex is created using xSemaphoreCreateRecursiveMutexStatic().
   // The address of xMutexBuffer is passed into the function, and will hold
   // the mutexes data structures - so no dynamic memory allocation will be
   // attempted.
   xSemaphore = xSemaphoreCreateRecursiveMutexStatic( &xMutexBuffer );

   // As no dynamic memory allocation was performed, xSemaphore cannot be NULL,
   // so there is no need to check it.
}
```

Parameters

- **`pxStaticSemaphore`** –Must point to a variable of type StaticSemaphore_t, which will then be used to hold the recursive mutex's data structure, removing the need for the memory to be allocated dynamically.

Returns If the recursive mutex was successfully created then a handle to the created recursive mutex is returned. If pxMutexBuffer was NULL then NULL is returned.

`xSemaphoreCreateCounting`(uxMaxCount, uxInitialCount)

Creates a new counting semaphore instance, and returns a handle by which the new counting semaphore can be referenced.

In many usage scenarios it is faster and more memory efficient to use a direct to task notification in place of a counting semaphore! https://www.FreeRTOS.org/RTOS-task-notifications.html

Internally, within the FreeRTOS implementation, counting semaphores use a block of memory, in which the counting semaphore structure is stored. If a counting semaphore is created using xSemaphoreCreateCounting() then the required memory is automatically dynamically allocated inside the xSemaphoreCreateCounting() function. (see https://www.FreeRTOS.org/a00111.html). If a counting semaphore is created using xSemaphoreCreateCountingStatic() then the application writer can instead optionally provide the memory that will get used by the counting semaphore. xSemaphoreCreateCountingStatic() therefore allows a counting semaphore to be created without using any dynamic memory allocation.

Counting semaphores are typically used for two things:

1) Counting events.

In this usage scenario an event handler will 'give' a semaphore each time an event occurs (incrementing the semaphore count value), and a handler task will 'take' a semaphore each time it processes an event (decrementing the semaphore count value). The count value is therefore the difference between the number of events that have occurred and the number that have been processed. In this case it is desirable for the initial count value to be zero.

2) Resource management.

In this usage scenario the count value indicates the number of resources available. To obtain control of a resource a task must first obtain a semaphore - decrementing the semaphore count value. When the count value reaches zero there are no free resources. When a task finishes with the resource it 'gives' the semaphore back - incrementing the semaphore count value. In this case it is desirable for the initial count value to be equal to the maximum count value, indicating that all resources are free.

Example usage:

```
SemaphoreHandle_t xSemaphore;

void vATask( void * pvParameters )
{
SemaphoreHandle_t xSemaphore = NULL;

 // Semaphore cannot be used before a call to xSemaphoreCreateCounting().
 // The max value to which the semaphore can count should be 10, and the
 // initial value assigned to the count should be 0.
 xSemaphore = xSemaphoreCreateCounting( 10, 0 );

 if( xSemaphore != NULL )
 {
     // The semaphore was created successfully.
     // The semaphore can now be used.
 }
}
```

Parameters

- **uxMaxCount** –The maximum count value that can be reached. When the semaphore reaches this value it can no longer be 'given'.
- **uxInitialCount** –The count value assigned to the semaphore when it is created.

Returns Handle to the created semaphore. Null if the semaphore could not be created.

xSemaphoreCreateCountingStatic(uxMaxCount, uxInitialCount, pxSemaphoreBuffer)

Creates a new counting semaphore instance, and returns a handle by which the new counting semaphore can be referenced.

In many usage scenarios it is faster and more memory efficient to use a direct to task notification in place of a counting semaphore! https://www.FreeRTOS.org/RTOS-task-notifications.html

Internally, within the FreeRTOS implementation, counting semaphores use a block of memory, in which the counting semaphore structure is stored. If a counting semaphore is created using xSemaphoreCreateCounting() then the required memory is automatically dynamically allocated inside the xSemaphoreCreateCounting() function. (see https://www.FreeRTOS.org/a00111.html). If a counting semaphore is created using xSemaphoreCreateCountingStatic() then the application writer must provide the memory. xSemaphoreCreateCountingStatic() therefore allows a counting semaphore to be created without using any dynamic memory allocation.

Counting semaphores are typically used for two things:

1) Counting events.

In this usage scenario an event handler will 'give' a semaphore each time an event occurs (incrementing the semaphore count value), and a handler task will 'take' a semaphore each time it processes an event (decrementing the semaphore count value). The count value is therefore the difference between the number of events that have occurred and the number that have been processed. In this case it is desirable for the initial count value to be zero.

2) Resource management.

In this usage scenario the count value indicates the number of resources available. To obtain control of a resource a task must first obtain a semaphore - decrementing the semaphore count value. When the count value reaches zero there are no free resources. When a task finishes with the resource it 'gives' the semaphore back - incrementing the semaphore count value. In this case it is desirable for the initial count value to be equal to the maximum count value, indicating that all resources are free.

Example usage:

```
SemaphoreHandle_t xSemaphore;
StaticSemaphore_t xSemaphoreBuffer;

void vATask( void * pvParameters )
{
SemaphoreHandle_t xSemaphore = NULL;

 // Counting semaphore cannot be used before they have been created.  Create
 // a counting semaphore using xSemaphoreCreateCountingStatic().  The max
 // value to which the semaphore can count is 10, and the initial value
 // assigned to the count will be 0.  The address of xSemaphoreBuffer is
 // passed in and will be used to hold the semaphore structure, so no dynamic
 // memory allocation will be used.
 xSemaphore = xSemaphoreCreateCounting( 10, 0, &xSemaphoreBuffer );

 // No memory allocation was attempted so xSemaphore cannot be NULL, so there
 // is no need to check its value.
}
```

Parameters

- **uxMaxCount** –The maximum count value that can be reached. When the semaphore reaches this value it can no longer be 'given'.
- **uxInitialCount** –The count value assigned to the semaphore when it is created.
- **pxSemaphoreBuffer** –Must point to a variable of type StaticSemaphore_t, which will then be used to hold the semaphore's data structure, removing the need for the memory to be allocated dynamically.

Returns If the counting semaphore was successfully created then a handle to the created counting semaphore is returned. If pxSemaphoreBuffer was NULL then NULL is returned.

vSemaphoreDelete(xSemaphore)

Delete a semaphore. This function must be used with care. For example, do not delete a mutex type semaphore if the mutex is held by a task.

Parameters

- **xSemaphore** –A handle to the semaphore to be deleted.

xSemaphoreGetMutexHolder(xSemaphore)

If xMutex is indeed a mutex type semaphore, return the current mutex holder. If xMutex is not a mutex type semaphore, or the mutex is available (not held by a task), return NULL.

Note: This is a good way of determining if the calling task is the mutex holder, but not a good way of determining the identity of the mutex holder as the holder may change between the function exiting and the returned value being tested.

xSemaphoreGetMutexHolderFromISR(xSemaphore)

If xMutex is indeed a mutex type semaphore, return the current mutex holder. If xMutex is not a mutex type semaphore, or the mutex is available (not held by a task), return NULL.

uxSemaphoreGetCount(xSemaphore)

If the semaphore is a counting semaphore then uxSemaphoreGetCount() returns its current count value. If the semaphore is a binary semaphore then uxSemaphoreGetCount() returns 1 if the semaphore is available, and 0 if the semaphore is not available.

Type Definitions

typedef *QueueHandle_t* **SemaphoreHandle_t**

Timer API

Header File

- components/freertos/include/freertos/timers.h

Functions

TimerHandle_t **xTimerCreate**(const char *const pcTimerName, const TickType_t xTimerPeriodInTicks, const UBaseType_t uxAutoReload, void *const pvTimerID, *TimerCallbackFunction_t* pxCallbackFunction)

TimerHandle_t xTimerCreate(const char * const pcTimerName, TickType_t xTimerPeriodInTicks, UBaseType_t uxAutoReload, void * pvTimerID, TimerCallbackFunction_t pxCallbackFunction);

Creates a new software timer instance, and returns a handle by which the created software timer can be referenced.

Internally, within the FreeRTOS implementation, software timers use a block of memory, in which the timer data structure is stored. If a software timer is created using xTimerCreate() then the required memory is automatically dynamically allocated inside the xTimerCreate() function. (see https://www.FreeRTOS.org/a00111.html). If a software timer is created using xTimerCreateStatic() then the application writer must provide the memory that will get used by the software timer. xTimerCreateStatic() therefore allows a software timer to be created without using any dynamic memory allocation.

Timers are created in the dormant state. The xTimerStart(), xTimerReset(), xTimerStartFromISR(), xTimerResetFromISR(), xTimerChangePeriod() and xTimerChangePeriodFromISR() API functions can all be used to transition a timer into the active state.

Example usage:

```
* #define NUM_TIMERS 5
*
* // An array to hold handles to the created timers.
* TimerHandle_t xTimers[ NUM_TIMERS ];
*
* // An array to hold a count of the number of times each timer expires.
* int32_t lExpireCounters[ NUM_TIMERS ] = { 0 };
*
* // Define a callback function that will be used by multiple timer instances.
* // The callback function does nothing but count the number of times the
* // associated timer expires, and stop the timer once the timer has expired
* // 10 times.
* void vTimerCallback( TimerHandle_t pxTimer )
* {
* int32_t lArrayIndex;
```

(continues on next page)

(continued from previous page)

```
* const int32_t xMaxExpiryCountBeforeStopping = 10;
*
*     // Optionally do something if the pxTimer parameter is NULL.
*     configASSERT( pxTimer );
*
*     // Which timer expired?
*     lArrayIndex = ( int32_t ) pvTimerGetTimerID( pxTimer );
*
*     // Increment the number of times that pxTimer has expired.
*     lExpireCounters[ lArrayIndex ] += 1;
*
*     // If the timer has expired 10 times then stop it from running.
*     if( lExpireCounters[ lArrayIndex ] == xMaxExpiryCountBeforeStopping )
*     {
*         // Do not use a block time if calling a timer API function from a
*         // timer callback function, as doing so could cause a deadlock!
*         xTimerStop( pxTimer, 0 );
*     }
* }
*
* void main( void )
* {
* int32_t x;
*
*     // Create then start some timers.  Starting the timers before the␣
↪scheduler
*     // has been started means the timers will start running immediately that
*     // the scheduler starts.
*     for( x = 0; x < NUM_TIMERS; x++ )
*     {
*         xTimers[ x ] = xTimerCreate(    "Timer",       // Just a text name,␣
↪not used by the kernel.
*                                         ( 100 * x ),   // The timer period␣
↪in ticks.
*                                         pdTRUE,        // The timers will␣
↪auto-reload themselves when they expire.
*                                         ( void * ) x,  // Assign each timer␣
↪a unique id equal to its array index.
*                                         vTimerCallback // Each timer calls␣
↪the same callback when it expires.
*                                       );
*
*         if( xTimers[ x ] == NULL )
*         {
*             // The timer was not created.
*         }
*         else
*         {
*             // Start the timer.  No block time is specified, and even if one␣
↪was
*             // it would be ignored because the scheduler has not yet been
*             // started.
*             if( xTimerStart( xTimers[ x ], 0 ) != pdPASS )
*             {
*                 // The timer could not be set into the Active state.
*             }
*         }
*     }
*
*     // ...
*     // Create tasks here.
```

(continues on next page)

(continued from previous page)

```
*      // ...
*
*      // Starting the scheduler will start the timers running as they have␣
↪already
*      // been set into the active state.
*      vTaskStartScheduler();
*
*      // Should not reach here.
*      for( ;; );
* }
*
```

Parameters

- **pcTimerName** –A text name that is assigned to the timer. This is done purely to assist debugging. The kernel itself only ever references a timer by its handle, and never by its name.
- **xTimerPeriodInTicks** –The timer period. The time is defined in tick periods so the constant portTICK_PERIOD_MS can be used to convert a time that has been specified in milliseconds. For example, if the timer must expire after 100 ticks, then xTimerPeriodInTicks should be set to 100. Alternatively, if the timer must expire after 500ms, then xPeriod can be set to (500 / portTICK_PERIOD_MS) provided configTICK_RATE_HZ is less than or equal to 1000. Time timer period must be greater than 0.
- **uxAutoReload** –If uxAutoReload is set to pdTRUE then the timer will expire repeatedly with a frequency set by the xTimerPeriodInTicks parameter. If uxAutoReload is set to pdFALSE then the timer will be a one-shot timer and enter the dormant state after it expires.
- **pvTimerID** –An identifier that is assigned to the timer being created. Typically this would be used in the timer callback function to identify which timer expired when the same callback function is assigned to more than one timer.
- **pxCallbackFunction** –The function to call when the timer expires. Callback functions must have the prototype defined by TimerCallbackFunction_t, which is "void vCallbackFunction(TimerHandle_t xTimer);" .

Returns If the timer is successfully created then a handle to the newly created timer is returned. If the timer cannot be created (because either there is insufficient FreeRTOS heap remaining to allocate the timer structures, or the timer period was set to 0) then NULL is returned.

TimerHandle_t **xTimerCreateStatic**(const char *const pcTimerName, const TickType_t xTimerPeriodInTicks, const UBaseType_t uxAutoReload, void *const pvTimerID, *TimerCallbackFunction_t* pxCallbackFunction, StaticTimer_t *pxTimerBuffer)

TimerHandle_t xTimerCreateStatic(const char * const pcTimerName, TickType_t xTimerPeriodInTicks, UBaseType_t uxAutoReload, void * pvTimerID, TimerCallbackFunction_t pxCallbackFunction, StaticTimer_t *pxTimerBuffer);

Creates a new software timer instance, and returns a handle by which the created software timer can be referenced.

Internally, within the FreeRTOS implementation, software timers use a block of memory, in which the timer data structure is stored. If a software timer is created using xTimerCreate() then the required memory is automatically dynamically allocated inside the xTimerCreate() function. (see https://www.FreeRTOS.org/a00111.html). If a software timer is created using xTimerCreateStatic() then the application writer must provide the memory that will get used by the software timer. xTimerCreateStatic() therefore allows a software timer to be created without using any dynamic memory allocation.

Timers are created in the dormant state. The xTimerStart(), xTimerReset(), xTimerStartFromISR(), xTimerResetFromISR(), xTimerChangePeriod() and xTimerChangePeriodFromISR() API functions can all be used to transition a timer into the active state.

Example usage:

```
*
* // The buffer used to hold the software timer's data structure.
* static StaticTimer_t xTimerBuffer;
*
* // A variable that will be incremented by the software timer's callback
* // function.
* UBaseType_t uxVariableToIncrement = 0;
*
* // A software timer callback function that increments a variable passed to
* // it when the software timer was created.  After the 5th increment the
* // callback function stops the software timer.
* static void prvTimerCallback( TimerHandle_t xExpiredTimer )
* {
* UBaseType_t *puxVariableToIncrement;
* BaseType_t xReturned;
*
*     // Obtain the address of the variable to increment from the timer ID.
*     puxVariableToIncrement = ( UBaseType_t * ) pvTimerGetTimerID(␣
↪xExpiredTimer );
*
*     // Increment the variable to show the timer callback has executed.
*     ( *puxVariableToIncrement )++;
*
*     // If this callback has executed the required number of times, stop the
*     // timer.
*     if( *puxVariableToIncrement == 5 )
*     {
*         // This is called from a timer callback so must not block.
*         xTimerStop( xExpiredTimer, staticDONT_BLOCK );
*     }
* }
*
*
* void main( void )
* {
*     // Create the software time.  xTimerCreateStatic() has an extra parameter
*     // than the normal xTimerCreate() API function.  The parameter is a␣
↪pointer
*     // to the StaticTimer_t structure that will hold the software timer
*     // structure.  If the parameter is passed as NULL then the structure␣
↪will be
*     // allocated dynamically, just as if xTimerCreate() had been called.
*     xTimer = xTimerCreateStatic( "T1",             // Text name for the task.
↪  Helps debugging only.  Not used by FreeRTOS.
*                                  xTimerPeriod,     // The period of the␣
↪timer in ticks.
*                                  pdTRUE,           // This is an auto-reload␣
↪timer.
*                                  ( void * ) &uxVariableToIncrement,    // A␣
↪variable incremented by the software timer's callback function
*                                  prvTimerCallback, // The function to␣
↪execute when the timer expires.
*                                  &xTimerBuffer );  // The buffer that will␣
↪hold the software timer structure.
*
*     // The scheduler has not started yet so a block time is not used.
*     xReturned = xTimerStart( xTimer, 0 );
*
*     // ...
*     // Create tasks here.
*     // ...
```

(continues on next page)

(continued from previous page)

```
*
*     // Starting the scheduler will start the timers running as they have␣
↪already
*     // been set into the active state.
*     vTaskStartScheduler();
*
*     // Should not reach here.
*     for( ;; );
* }
*
```

Parameters

- **pcTimerName** –A text name that is assigned to the timer. This is done purely to assist debugging. The kernel itself only ever references a timer by its handle, and never by its name.
- **xTimerPeriodInTicks** –The timer period. The time is defined in tick periods so the constant portTICK_PERIOD_MS can be used to convert a time that has been specified in milliseconds. For example, if the timer must expire after 100 ticks, then xTimerPeriodInTicks should be set to 100. Alternatively, if the timer must expire after 500ms, then xPeriod can be set to (500 / portTICK_PERIOD_MS) provided configTICK_RATE_HZ is less than or equal to 1000. The timer period must be greater than 0.
- **uxAutoReload** –If uxAutoReload is set to pdTRUE then the timer will expire repeatedly with a frequency set by the xTimerPeriodInTicks parameter. If uxAutoReload is set to pdFALSE then the timer will be a one-shot timer and enter the dormant state after it expires.
- **pvTimerID** –An identifier that is assigned to the timer being created. Typically this would be used in the timer callback function to identify which timer expired when the same callback function is assigned to more than one timer.
- **pxCallbackFunction** –The function to call when the timer expires. Callback functions must have the prototype defined by TimerCallbackFunction_t, which is "void vCallbackFunction(TimerHandle_t xTimer);" .
- **pxTimerBuffer** –Must point to a variable of type StaticTimer_t, which will be then be used to hold the software timer's data structures, removing the need for the memory to be allocated dynamically.

Returns If the timer is created then a handle to the created timer is returned. If pxTimerBuffer was NULL then NULL is returned.

void ***pvTimerGetTimerID**(const *TimerHandle_t* xTimer)

void *pvTimerGetTimerID(TimerHandle_t xTimer);

Returns the ID assigned to the timer.

IDs are assigned to timers using the pvTimerID parameter of the call to xTimerCreated() that was used to create the timer, and by calling the vTimerSetTimerID() API function.

If the same callback function is assigned to multiple timers then the timer ID can be used as time specific (timer local) storage.

Example usage:

See the xTimerCreate() API function example usage scenario.

Parameters **xTimer** –The timer being queried.
Returns The ID assigned to the timer being queried.

void **vTimerSetTimerID**(*TimerHandle_t* xTimer, void *pvNewID)

void vTimerSetTimerID(TimerHandle_t xTimer, void *pvNewID);

Sets the ID assigned to the timer.

IDs are assigned to timers using the pvTimerID parameter of the call to xTimerCreated() that was used to create the timer.

If the same callback function is assigned to multiple timers then the timer ID can be used as time specific (timer local) storage.

Example usage:

See the xTimerCreate() API function example usage scenario.

Parameters
- **xTimer** –The timer being updated.
- **pvNewID** –The ID to assign to the timer.

BaseType_t **xTimerIsTimerActive**(*TimerHandle_t* xTimer)

BaseType_t xTimerIsTimerActive(TimerHandle_t xTimer);

Queries a timer to see if it is active or dormant.

A timer will be dormant if: 1) It has been created but not started, or 2) It is an expired one-shot timer that has not been restarted.

Timers are created in the dormant state. The xTimerStart(), xTimerReset(), xTimerStartFromISR(), xTimerResetFromISR(), xTimerChangePeriod() and xTimerChangePeriodFromISR() API functions can all be used to transition a timer into the active state.

Example usage:

```
* // This function assumes xTimer has already been created.
* void vAFunction( TimerHandle_t xTimer )
* {
*     if( xTimerIsTimerActive( xTimer ) != pdFALSE ) // or more simply and␣
↪equivalently "if( xTimerIsTimerActive( xTimer ) )"
*     {
*         // xTimer is active, do something.
*     }
*     else
*     {
*         // xTimer is not active, do something else.
*     }
* }
*
```

Parameters **xTimer** –The timer being queried.
Returns pdFALSE will be returned if the timer is dormant. A value other than pdFALSE will be returned if the timer is active.

TaskHandle_t **xTimerGetTimerDaemonTaskHandle**(void)

xTimerGetTimerDaemonTaskHandle() is only available if INCLUDE_xTimerGetTimerDaemonTaskHandle is set to 1 in FreeRTOSConfig.h.

Simply returns the handle of the timer service/daemon task. It it not valid to call xTimerGetTimerDaemonTaskHandle() before the scheduler has been started.

BaseType_t **xTimerPendFunctionCallFromISR**(*PendedFunction_t* xFunctionToPend, void *pvParameter1, uint32_t ulParameter2, BaseType_t *pxHigherPriorityTaskWoken)

BaseType_t xTimerPendFunctionCallFromISR(PendedFunction_t xFunctionToPend, void *pvParameter1, uint32_t ulParameter2, BaseType_t *pxHigherPriorityTaskWoken);

Used from application interrupt service routines to defer the execution of a function to the RTOS daemon task (the timer service task, hence this function is implemented in timers.c and is prefixed with ‘Timer’).

Ideally an interrupt service routine (ISR) is kept as short as possible, but sometimes an ISR either has a lot of processing to do, or needs to perform processing that is not deterministic. In these cases xTimerPendFunctionCallFromISR() can be used to defer processing of a function to the RTOS daemon task.

A mechanism is provided that allows the interrupt to return directly to the task that will subsequently execute the pended callback function. This allows the callback function to execute contiguously in time with the interrupt - just as if the callback had executed in the interrupt itself.

Example usage:

```
*
*  // The callback function that will execute in the context of the daemon␣
↪task.
*  // Note callback functions must all use this same prototype.
*  void vProcessInterface( void *pvParameter1, uint32_t ulParameter2 )
*  {
*      BaseType_t xInterfaceToService;
*
*      // The interface that requires servicing is passed in the second
*      // parameter.  The first parameter is not used in this case.
*      xInterfaceToService = ( BaseType_t ) ulParameter2;
*
*      // ...Perform the processing here...
*  }
*
*  // An ISR that receives data packets from multiple interfaces
*  void vAnISR( void )
*  {
*      BaseType_t xInterfaceToService, xHigherPriorityTaskWoken;
*
*      // Query the hardware to determine which interface needs processing.
*      xInterfaceToService = prvCheckInterfaces();
*
*      // The actual processing is to be deferred to a task.  Request the
*      // vProcessInterface() callback function is executed, passing in the
*      // number of the interface that needs processing.  The interface to
*      // service is passed in the second parameter.  The first parameter is
*      // not used in this case.
*      xHigherPriorityTaskWoken = pdFALSE;
*      xTimerPendFunctionCallFromISR( vProcessInterface, NULL, ( uint32_t )␣
↪xInterfaceToService, &xHigherPriorityTaskWoken );
*
*      // If xHigherPriorityTaskWoken is now set to pdTRUE then a context
*      // switch should be requested.  The macro used is port specific and will
*      // be either portYIELD_FROM_ISR() or portEND_SWITCHING_ISR() - refer to
*      // the documentation page for the port being used.
*      portYIELD_FROM_ISR( xHigherPriorityTaskWoken );
*
*  }
*
```

Parameters

- **xFunctionToPend** –The function to execute from the timer service/ daemon task. The function must conform to the PendedFunction_t prototype.
- **pvParameter1** –The value of the callback function’s first parameter. The parameter has a void * type to allow it to be used to pass any type. For example, unsigned longs can be cast to a void *, or the void * can be used to point to a structure.
- **ulParameter2** –The value of the callback function’s second parameter.

- **pxHigherPriorityTaskWoken** –As mentioned above, calling this function will result in a message being sent to the timer daemon task. If the priority of the timer daemon task (which is set using configTIMER_TASK_PRIORITY in FreeRTOSConfig.h) is higher than the priority of the currently running task (the task the interrupt interrupted) then *pxHigherPriorityTaskWoken will be set to pdTRUE within xTimerPendFunctionCallFromISR(), indicating that a context switch should be requested before the interrupt exits. For that reason *pxHigherPriorityTaskWoken must be initialised to pdFALSE. See the example code below.

Returns pdPASS is returned if the message was successfully sent to the timer daemon task, otherwise pdFALSE is returned.

BaseType_t **xTimerPendFunctionCall**(*PendedFunction_t* xFunctionToPend, void *pvParameter1, uint32_t ulParameter2, TickType_t xTicksToWait)

BaseType_t xTimerPendFunctionCall(PendedFunction_t xFunctionToPend, void *pvParameter1, uint32_t ulParameter2, TickType_t xTicksToWait);

Used to defer the execution of a function to the RTOS daemon task (the timer service task, hence this function is implemented in timers.c and is prefixed with 'Timer').

Parameters

- **xFunctionToPend** –The function to execute from the timer service/ daemon task. The function must conform to the PendedFunction_t prototype.
- **pvParameter1** –The value of the callback function's first parameter. The parameter has a void * type to allow it to be used to pass any type. For example, unsigned longs can be cast to a void *, or the void * can be used to point to a structure.
- **ulParameter2** –The value of the callback function's second parameter.
- **xTicksToWait** –Calling this function will result in a message being sent to the timer daemon task on a queue. xTicksToWait is the amount of time the calling task should remain in the Blocked state (so not using any processing time) for space to become available on the timer queue if the queue is found to be full.

Returns pdPASS is returned if the message was successfully sent to the timer daemon task, otherwise pdFALSE is returned.

const char ***pcTimerGetName**(*TimerHandle_t* xTimer)

const char * const pcTimerGetName(TimerHandle_t xTimer);

Returns the name that was assigned to a timer when the timer was created.

Parameters **xTimer** –The handle of the timer being queried.

Returns The name assigned to the timer specified by the xTimer parameter.

void **vTimerSetReloadMode**(*TimerHandle_t* xTimer, const UBaseType_t uxAutoReload)

void vTimerSetReloadMode(TimerHandle_t xTimer, const UBaseType_t uxAutoReload);

Updates a timer to be either an auto-reload timer, in which case the timer automatically resets itself each time it expires, or a one-shot timer, in which case the timer will only expire once unless it is manually restarted.

Parameters

- **xTimer** –The handle of the timer being updated.
- **uxAutoReload** –If uxAutoReload is set to pdTRUE then the timer will expire repeatedly with a frequency set by the timer's period (see the xTimerPeriodInTicks parameter of the xTimerCreate() API function). If uxAutoReload is set to pdFALSE then the timer will be a one-shot timer and enter the dormant state after it expires.

UBaseType_t **uxTimerGetReloadMode**(*TimerHandle_t* xTimer)

UBaseType_t uxTimerGetReloadMode(TimerHandle_t xTimer);

Queries a timer to determine if it is an auto-reload timer, in which case the timer automatically resets itself each time it expires, or a one-shot timer, in which case the timer will only expire once unless it is manually restarted.

Parameters **xTimer** –The handle of the timer being queried.

Returns If the timer is an auto-reload timer then pdTRUE is returned, otherwise pdFALSE is returned.

TickType_t **xTimerGetPeriod**(*TimerHandle_t* xTimer)

TickType_t xTimerGetPeriod(TimerHandle_t xTimer);

Returns the period of a timer.

Parameters **xTimer** –The handle of the timer being queried.
Returns The period of the timer in ticks.

TickType_t **xTimerGetExpiryTime**(*TimerHandle_t* xTimer)

TickType_t xTimerGetExpiryTime(TimerHandle_t xTimer);

Returns the time in ticks at which the timer will expire. If this is less than the current tick count then the expiry time has overflowed from the current time.

Parameters **xTimer** –The handle of the timer being queried.
Returns If the timer is running then the time in ticks at which the timer will next expire is returned. If the timer is not running then the return value is undefined.

void **vApplicationGetTimerTaskMemory**(StaticTask_t **ppxTimerTaskTCBBuffer, StackType_t **ppxTimerTaskStackBuffer, uint32_t *pulTimerTaskStackSize)

This function is used to provide a statically allocated block of memory to FreeRTOS to hold the Timer Task TCB. This function is required when configSUPPORT_STATIC_ALLOCATION is set. For more information see this URI: https://www.FreeRTOS.org/a00110.html#configSUPPORT_STATIC_ALLOCATION

Parameters

- **ppxTimerTaskTCBBuffer** –A handle to a statically allocated TCB buffer
- **ppxTimerTaskStackBuffer** –A handle to a statically allocated Stack buffer for thie idle task
- **pulTimerTaskStackSize** –A pointer to the number of elements that will fit in the allocated stack buffer

Macros

tmrCOMMAND_EXECUTE_CALLBACK_FROM_ISR

tmrCOMMAND_EXECUTE_CALLBACK

tmrCOMMAND_START_DONT_TRACE

tmrCOMMAND_START

tmrCOMMAND_RESET

tmrCOMMAND_STOP

tmrCOMMAND_CHANGE_PERIOD

tmrCOMMAND_DELETE

tmrFIRST_FROM_ISR_COMMAND

tmrCOMMAND_START_FROM_ISR

tmrCOMMAND_RESET_FROM_ISR

tmrCOMMAND_STOP_FROM_ISR

tmrCOMMAND_CHANGE_PERIOD_FROM_ISR

xTimerStart (xTimer, xTicksToWait)

BaseType_t xTimerStart(TimerHandle_t xTimer, TickType_t xTicksToWait);

Timer functionality is provided by a timer service/daemon task. Many of the public FreeRTOS timer API functions send commands to the timer service task through a queue called the timer command queue. The timer command queue is private to the kernel itself and is not directly accessible to application code. The length of the timer command queue is set by the configTIMER_QUEUE_LENGTH configuration constant.

xTimerStart() starts a timer that was previously created using the xTimerCreate() API function. If the timer had already been started and was already in the active state, then xTimerStart() has equivalent functionality to the xTimerReset() API function.

Starting a timer ensures the timer is in the active state. If the timer is not stopped, deleted, or reset in the mean time, the callback function associated with the timer will get called 'n' ticks after xTimerStart() was called, where 'n' is the timers defined period.

It is valid to call xTimerStart() before the scheduler has been started, but when this is done the timer will not actually start until the scheduler is started, and the timers expiry time will be relative to when the scheduler is started, not relative to when xTimerStart() was called.

The configUSE_TIMERS configuration constant must be set to 1 for xTimerStart() to be available.

Example usage:

See the xTimerCreate() API function example usage scenario.

Parameters

- **xTimer** –The handle of the timer being started/restarted.
- **xTicksToWait** –Specifies the time, in ticks, that the calling task should be held in the Blocked state to wait for the start command to be successfully sent to the timer command queue, should the queue already be full when xTimerStart() was called. xTicksToWait is ignored if xTimerStart() is called before the scheduler is started.

Returns pdFAIL will be returned if the start command could not be sent to the timer command queue even after xTicksToWait ticks had passed. pdPASS will be returned if the command was successfully sent to the timer command queue. When the command is actually processed will depend on the priority of the timer service/daemon task relative to other tasks in the system, although the timers expiry time is relative to when xTimerStart() is actually called. The timer service/daemon task priority is set by the configTIMER_TASK_PRIORITY configuration constant.

xTimerStop (xTimer, xTicksToWait)

BaseType_t xTimerStop(TimerHandle_t xTimer, TickType_t xTicksToWait);

Timer functionality is provided by a timer service/daemon task. Many of the public FreeRTOS timer API functions send commands to the timer service task through a queue called the timer command queue. The timer command queue is private to the kernel itself and is not directly accessible to application code. The length of the timer command queue is set by the configTIMER_QUEUE_LENGTH configuration constant.

xTimerStop() stops a timer that was previously started using either of the The xTimerStart(), xTimerReset(), xTimerStartFromISR(), xTimerResetFromISR(), xTimerChangePeriod() or xTimerChangePeriodFromISR() API functions.

Stopping a timer ensures the timer is not in the active state.

The configUSE_TIMERS configuration constant must be set to 1 for xTimerStop() to be available.

Example usage:

See the xTimerCreate() API function example usage scenario.

Parameters

- **xTimer** –The handle of the timer being stopped.
- **xTicksToWait** –Specifies the time, in ticks, that the calling task should be held in the Blocked state to wait for the stop command to be successfully sent to the timer command queue, should the queue already be full when xTimerStop() was called. xTicksToWait is ignored if xTimerStop() is called before the scheduler is started.

Returns pdFAIL will be returned if the stop command could not be sent to the timer command queue even after xTicksToWait ticks had passed. pdPASS will be returned if the command was successfully sent to the timer command queue. When the command is actually processed will depend on the priority of the timer service/daemon task relative to other tasks in the system. The timer service/daemon task priority is set by the configTIMER_TASK_PRIORITY configuration constant.

xTimerChangePeriod(xTimer, xNewPeriod, xTicksToWait)

BaseType_t xTimerChangePeriod(TimerHandle_t xTimer, TickType_t xNewPeriod, TickType_t xTicksToWait);

Timer functionality is provided by a timer service/daemon task. Many of the public FreeRTOS timer API functions send commands to the timer service task through a queue called the timer command queue. The timer command queue is private to the kernel itself and is not directly accessible to application code. The length of the timer command queue is set by the configTIMER_QUEUE_LENGTH configuration constant.

xTimerChangePeriod() changes the period of a timer that was previously created using the xTimerCreate() API function.

xTimerChangePeriod() can be called to change the period of an active or dormant state timer.

The configUSE_TIMERS configuration constant must be set to 1 for xTimerChangePeriod() to be available.

Example usage:

```
* // This function assumes xTimer has already been created.  If the timer
* // referenced by xTimer is already active when it is called, then the timer
* // is deleted.  If the timer referenced by xTimer is not active when it is
* // called, then the period of the timer is set to 500ms and the timer is
* // started.
* void vAFunction( TimerHandle_t xTimer )
* {
*     if( xTimerIsTimerActive( xTimer ) != pdFALSE ) // or more simply and␣
↪equivalently "if( xTimerIsTimerActive( xTimer ) )"
*     {
*         // xTimer is already active - delete it.
*         xTimerDelete( xTimer );
*     }
*     else
*     {
*         // xTimer is not active, change its period to 500ms.  This will also
*         // cause the timer to start.  Block for a maximum of 100 ticks if the
*         // change period command cannot immediately be sent to the timer
*         // command queue.
*         if( xTimerChangePeriod( xTimer, 500 / portTICK_PERIOD_MS, 100 ) ==␣
↪pdPASS )
*         {
*             // The command was successfully sent.
*         }
*         else
```

(continues on next page)

(continued from previous page)

```
*          {
*              // The command could not be sent, even after waiting for 100␣
↪ticks
*              // to pass.  Take appropriate action here.
*          }
*      }
* }
*
```

Parameters

- **xTimer** –The handle of the timer that is having its period changed.
- **xNewPeriod** –The new period for xTimer. Timer periods are specified in tick periods, so the constant portTICK_PERIOD_MS can be used to convert a time that has been specified in milliseconds. For example, if the timer must expire after 100 ticks, then xNewPeriod should be set to 100. Alternatively, if the timer must expire after 500ms, then xNewPeriod can be set to (500 / portTICK_PERIOD_MS) provided configTICK_RATE_HZ is less than or equal to 1000.
- **xTicksToWait** –Specifies the time, in ticks, that the calling task should be held in the Blocked state to wait for the change period command to be successfully sent to the timer command queue, should the queue already be full when xTimerChangePeriod() was called. xTicksToWait is ignored if xTimerChangePeriod() is called before the scheduler is started.

Returns pdFAIL will be returned if the change period command could not be sent to the timer command queue even after xTicksToWait ticks had passed. pdPASS will be returned if the command was successfully sent to the timer command queue. When the command is actually processed will depend on the priority of the timer service/daemon task relative to other tasks in the system. The timer service/daemon task priority is set by the configTIMER_TASK_PRIORITY configuration constant.

xTimerDelete (xTimer, xTicksToWait)

BaseType_t xTimerDelete(TimerHandle_t xTimer, TickType_t xTicksToWait);

Timer functionality is provided by a timer service/daemon task. Many of the public FreeRTOS timer API functions send commands to the timer service task through a queue called the timer command queue. The timer command queue is private to the kernel itself and is not directly accessible to application code. The length of the timer command queue is set by the configTIMER_QUEUE_LENGTH configuration constant.

xTimerDelete() deletes a timer that was previously created using the xTimerCreate() API function.

The configUSE_TIMERS configuration constant must be set to 1 for xTimerDelete() to be available.

Example usage:

See the xTimerChangePeriod() API function example usage scenario.

Parameters

- **xTimer** –The handle of the timer being deleted.
- **xTicksToWait** –Specifies the time, in ticks, that the calling task should be held in the Blocked state to wait for the delete command to be successfully sent to the timer command queue, should the queue already be full when xTimerDelete() was called. xTicksToWait is ignored if xTimerDelete() is called before the scheduler is started.

Returns pdFAIL will be returned if the delete command could not be sent to the timer command queue even after xTicksToWait ticks had passed. pdPASS will be returned if the command was successfully sent to the timer command queue. When the command is actually processed will depend on the priority of the timer service/daemon task relative to other tasks in the system. The timer service/daemon task priority is set by the configTIMER_TASK_PRIORITY configuration constant.

xTimerReset (xTimer, xTicksToWait)

BaseType_t xTimerReset(TimerHandle_t xTimer, TickType_t xTicksToWait);

Timer functionality is provided by a timer service/daemon task. Many of the public FreeRTOS timer API functions send commands to the timer service task through a queue called the timer command queue. The timer command queue is private to the kernel itself and is not directly accessible to application code. The length of the timer command queue is set by the configTIMER_QUEUE_LENGTH configuration constant.

xTimerReset() re-starts a timer that was previously created using the xTimerCreate() API function. If the timer had already been started and was already in the active state, then xTimerReset() will cause the timer to re-evaluate its expiry time so that it is relative to when xTimerReset() was called. If the timer was in the dormant state then xTimerReset() has equivalent functionality to the xTimerStart() API function.

Resetting a timer ensures the timer is in the active state. If the timer is not stopped, deleted, or reset in the mean time, the callback function associated with the timer will get called 'n' ticks after xTimerReset() was called, where 'n' is the timers defined period.

It is valid to call xTimerReset() before the scheduler has been started, but when this is done the timer will not actually start until the scheduler is started, and the timers expiry time will be relative to when the scheduler is started, not relative to when xTimerReset() was called.

The configUSE_TIMERS configuration constant must be set to 1 for xTimerReset() to be available.

Example usage:

```
* // When a key is pressed, an LCD back-light is switched on.  If 5 seconds␣
↪pass
* // without a key being pressed, then the LCD back-light is switched off.  In
* // this case, the timer is a one-shot timer.
*
* TimerHandle_t xBacklightTimer = NULL;
*
* // The callback function assigned to the one-shot timer.  In this case the
* // parameter is not used.
* void vBacklightTimerCallback( TimerHandle_t pxTimer )
* {
*     // The timer expired, therefore 5 seconds must have passed since a key
*     // was pressed.  Switch off the LCD back-light.
*     vSetBacklightState( BACKLIGHT_OFF );
* }
*
* // The key press event handler.
* void vKeyPressEventHandler( char cKey )
* {
*     // Ensure the LCD back-light is on, then reset the timer that is
*     // responsible for turning the back-light off after 5 seconds of
*     // key inactivity.  Wait 10 ticks for the command to be successfully sent
*     // if it cannot be sent immediately.
*     vSetBacklightState( BACKLIGHT_ON );
*     if( xTimerReset( xBacklightTimer, 100 ) != pdPASS )
*     {
*         // The reset command was not executed successfully.  Take appropriate
*         // action here.
*     }
*
*     // Perform the rest of the key processing here.
* }
*
* void main( void )
* {
* int32_t x;
*
```

(continues on next page)

(continued from previous page)

```
*     // Create then start the one-shot timer that is responsible for turning
*     // the back-light off if no keys are pressed within a 5 second period.
*     xBacklightTimer = xTimerCreate( "BacklightTimer",           // Just a␣
↪text name, not used by the kernel.
*                                     ( 5000 / portTICK_PERIOD_MS), // The␣
↪timer period in ticks.
*                                     pdFALSE,                    // The timer␣
↪is a one-shot timer.
*                                     0,                          // The id is␣
↪not used by the callback so can take any value.
*                                     vBacklightTimerCallback     // The␣
↪callback function that switches the LCD back-light off.
*                                   );
*
*     if( xBacklightTimer == NULL )
*     {
*         // The timer was not created.
*     }
*     else
*     {
*         // Start the timer.  No block time is specified, and even if one was
*         // it would be ignored because the scheduler has not yet been
*         // started.
*         if( xTimerStart( xBacklightTimer, 0 ) != pdPASS )
*         {
*             // The timer could not be set into the Active state.
*         }
*     }
*
*     // ...
*     // Create tasks here.
*     // ...
*
*     // Starting the scheduler will start the timer running as it has already
*     // been set into the active state.
*     vTaskStartScheduler();
*
*     // Should not reach here.
*     for( ;; );
* }
*
```

Parameters

- **xTimer** –The handle of the timer being reset/started/restarted.
- **xTicksToWait** –Specifies the time, in ticks, that the calling task should be held in the Blocked state to wait for the reset command to be successfully sent to the timer command queue, should the queue already be full when xTimerReset() was called. xTicksToWait is ignored if xTimerReset() is called before the scheduler is started.

Returns pdFAIL will be returned if the reset command could not be sent to the timer command queue even after xTicksToWait ticks had passed. pdPASS will be returned if the command was successfully sent to the timer command queue. When the command is actually processed will depend on the priority of the timer service/daemon task relative to other tasks in the system, although the timers expiry time is relative to when xTimerStart() is actually called. The timer service/daemon task priority is set by the configTIMER_TASK_PRIORITY configuration constant.

xTimerStartFromISR (xTimer, pxHigherPriorityTaskWoken)

BaseType_t xTimerStartFromISR(TimerHandle_t xTimer, BaseType_t *pxHigherPriorityTaskWoken);

A version of xTimerStart() that can be called from an interrupt service routine.

Example usage:

```
* // This scenario assumes xBacklightTimer has already been created.  When a
* // key is pressed, an LCD back-light is switched on.  If 5 seconds pass
* // without a key being pressed, then the LCD back-light is switched off.  In
* // this case, the timer is a one-shot timer, and unlike the example given for
* // the xTimerReset() function, the key press event handler is an interrupt
* // service routine.
*
* // The callback function assigned to the one-shot timer.  In this case the
* // parameter is not used.
* void vBacklightTimerCallback( TimerHandle_t pxTimer )
* {
*     // The timer expired, therefore 5 seconds must have passed since a key
*     // was pressed.  Switch off the LCD back-light.
*     vSetBacklightState( BACKLIGHT_OFF );
* }
*
* // The key press interrupt service routine.
* void vKeyPressEventInterruptHandler( void )
* {
* BaseType_t xHigherPriorityTaskWoken = pdFALSE;
*
*     // Ensure the LCD back-light is on, then restart the timer that is
*     // responsible for turning the back-light off after 5 seconds of
*     // key inactivity.  This is an interrupt service routine so can only
*     // call FreeRTOS API functions that end in "FromISR".
*     vSetBacklightState( BACKLIGHT_ON );
*
*     // xTimerStartFromISR() or xTimerResetFromISR() could be called here
*     // as both cause the timer to re-calculate its expiry time.
*     // xHigherPriorityTaskWoken was initialised to pdFALSE when it was
*     // declared (in this function).
*     if( xTimerStartFromISR( xBacklightTimer, &xHigherPriorityTaskWoken ) !=␣
↪pdPASS )
*     {
*         // The start command was not executed successfully.  Take appropriate
*         // action here.
*     }
*
*     // Perform the rest of the key processing here.
*
*     // If xHigherPriorityTaskWoken equals pdTRUE, then a context switch
*     // should be performed.  The syntax required to perform a context switch
*     // from inside an ISR varies from port to port, and from compiler to
*     // compiler.  Inspect the demos for the port you are using to find the
*     // actual syntax required.
*     if( xHigherPriorityTaskWoken != pdFALSE )
*     {
*         // Call the interrupt safe yield function here (actual function
*         // depends on the FreeRTOS port being used).
*     }
* }
*
```

Parameters

- **xTimer** –The handle of the timer being started/restarted.
- **pxHigherPriorityTaskWoken** –The timer service/daemon task spends most of its time in the Blocked state, waiting for messages to arrive on the timer command queue. Calling xTimerStartFromISR() writes a message to the timer command queue, so has the potential to transition the timer service/daemon task out of the Blocked state. If calling

xTimerStartFromISR() causes the timer service/daemon task to leave the Blocked state, and the timer service/ daemon task has a priority equal to or greater than the currently executing task (the task that was interrupted), then *pxHigherPriorityTaskWoken will get set to pdTRUE internally within the xTimerStartFromISR() function. If xTimerStartFromISR() sets this value to pdTRUE then a context switch should be performed before the interrupt exits.

Returns pdFAIL will be returned if the start command could not be sent to the timer command queue. pdPASS will be returned if the command was successfully sent to the timer command queue. When the command is actually processed will depend on the priority of the timer service/daemon task relative to other tasks in the system, although the timers expiry time is relative to when xTimerStartFromISR() is actually called. The timer service/daemon task priority is set by the configTIMER_TASK_PRIORITY configuration constant.

xTimerStopFromISR(xTimer, pxHigherPriorityTaskWoken)

BaseType_t xTimerStopFromISR(TimerHandle_t xTimer, BaseType_t *pxHigherPriorityTaskWoken);

A version of xTimerStop() that can be called from an interrupt service routine.

Example usage:

```
* // This scenario assumes xTimer has already been created and started.  When
* // an interrupt occurs, the timer should be simply stopped.
*
* // The interrupt service routine that stops the timer.
* void vAnExampleInterruptServiceRoutine( void )
* {
* BaseType_t xHigherPriorityTaskWoken = pdFALSE;
*
*     // The interrupt has occurred - simply stop the timer.
*     // xHigherPriorityTaskWoken was set to pdFALSE where it was defined
*     // (within this function).  As this is an interrupt service routine, only
*     // FreeRTOS API functions that end in "FromISR" can be used.
*     if( xTimerStopFromISR( xTimer, &xHigherPriorityTaskWoken ) != pdPASS )
*     {
*         // The stop command was not executed successfully.  Take appropriate
*         // action here.
*     }
*
*     // If xHigherPriorityTaskWoken equals pdTRUE, then a context switch
*     // should be performed.  The syntax required to perform a context switch
*     // from inside an ISR varies from port to port, and from compiler to
*     // compiler.  Inspect the demos for the port you are using to find the
*     // actual syntax required.
*     if( xHigherPriorityTaskWoken != pdFALSE )
*     {
*         // Call the interrupt safe yield function here (actual function
*         // depends on the FreeRTOS port being used).
*     }
* }
*
```

Parameters

- **xTimer** –The handle of the timer being stopped.
- **pxHigherPriorityTaskWoken** –The timer service/daemon task spends most of its time in the Blocked state, waiting for messages to arrive on the timer command queue. Calling xTimerStopFromISR() writes a message to the timer command queue, so has the potential to transition the timer service/daemon task out of the Blocked state. If calling xTimerStopFromISR() causes the timer service/daemon task to leave the Blocked state, and the timer service/ daemon task has a priority equal to or greater than the currently executing task (the task that was interrupted), then *pxHigherPriorityTaskWoken

will get set to pdTRUE internally within the xTimerStopFromISR() function. If xTimerStopFromISR() sets this value to pdTRUE then a context switch should be performed before the interrupt exits.

Returns pdFAIL will be returned if the stop command could not be sent to the timer command queue. pdPASS will be returned if the command was successfully sent to the timer command queue. When the command is actually processed will depend on the priority of the timer service/daemon task relative to other tasks in the system. The timer service/daemon task priority is set by the configTIMER_TASK_PRIORITY configuration constant.

xTimerChangePeriodFromISR(xTimer, xNewPeriod, pxHigherPriorityTaskWoken)

BaseType_t xTimerChangePeriodFromISR(TimerHandle_t xTimer, TickType_t xNewPeriod, BaseType_t *pxHigherPriorityTaskWoken);

A version of xTimerChangePeriod() that can be called from an interrupt service routine.

Example usage:

```
* // This scenario assumes xTimer has already been created and started.  When
* // an interrupt occurs, the period of xTimer should be changed to 500ms.
*
* // The interrupt service routine that changes the period of xTimer.
* void vAnExampleInterruptServiceRoutine( void )
* {
* BaseType_t xHigherPriorityTaskWoken = pdFALSE;
*
*     // The interrupt has occurred - change the period of xTimer to 500ms.
*     // xHigherPriorityTaskWoken was set to pdFALSE where it was defined
*     // (within this function).  As this is an interrupt service routine, only
*     // FreeRTOS API functions that end in "FromISR" can be used.
*     if( xTimerChangePeriodFromISR( xTimer, &xHigherPriorityTaskWoken ) !=␣
↪pdPASS )
*     {
*         // The command to change the timers period was not executed
*         // successfully.  Take appropriate action here.
*     }
*
*     // If xHigherPriorityTaskWoken equals pdTRUE, then a context switch
*     // should be performed.  The syntax required to perform a context switch
*     // from inside an ISR varies from port to port, and from compiler to
*     // compiler.  Inspect the demos for the port you are using to find the
*     // actual syntax required.
*     if( xHigherPriorityTaskWoken != pdFALSE )
*     {
*         // Call the interrupt safe yield function here (actual function
*         // depends on the FreeRTOS port being used).
*     }
* }
*
```

Parameters

- **xTimer** –The handle of the timer that is having its period changed.
- **xNewPeriod** –The new period for xTimer. Timer periods are specified in tick periods, so the constant portTICK_PERIOD_MS can be used to convert a time that has been specified in milliseconds. For example, if the timer must expire after 100 ticks, then xNewPeriod should be set to 100. Alternatively, if the timer must expire after 500ms, then xNewPeriod can be set to (500 / portTICK_PERIOD_MS) provided configTICK_RATE_HZ is less than or equal to 1000.
- **pxHigherPriorityTaskWoken** –The timer service/daemon task spends most of its time in the Blocked state, waiting for messages to arrive on the timer command queue. Calling xTimerChangePeriodFromISR() writes a message to the timer command queue,

so has the potential to transition the timer service/ daemon task out of the Blocked state. If calling xTimerChangePeriodFromISR() causes the timer service/daemon task to leave the Blocked state, and the timer service/daemon task has a priority equal to or greater than the currently executing task (the task that was interrupted), then *pxHigherPriorityTaskWoken will get set to pdTRUE internally within the xTimerChangePeriodFromISR() function. If xTimerChangePeriodFromISR() sets this value to pdTRUE then a context switch should be performed before the interrupt exits.

Returns pdFAIL will be returned if the command to change the timers period could not be sent to the timer command queue. pdPASS will be returned if the command was successfully sent to the timer command queue. When the command is actually processed will depend on the priority of the timer service/daemon task relative to other tasks in the system. The timer service/daemon task priority is set by the configTIMER_TASK_PRIORITY configuration constant.

xTimerResetFromISR (xTimer, pxHigherPriorityTaskWoken)

BaseType_t xTimerResetFromISR(TimerHandle_t xTimer, BaseType_t *pxHigherPriorityTaskWoken);

A version of xTimerReset() that can be called from an interrupt service routine.

Example usage:

```
* // This scenario assumes xBacklightTimer has already been created.  When a
* // key is pressed, an LCD back-light is switched on.  If 5 seconds pass
* // without a key being pressed, then the LCD back-light is switched off.  In
* // this case, the timer is a one-shot timer, and unlike the example given for
* // the xTimerReset() function, the key press event handler is an interrupt
* // service routine.
*
* // The callback function assigned to the one-shot timer.  In this case the
* // parameter is not used.
* void vBacklightTimerCallback( TimerHandle_t pxTimer )
* {
*     // The timer expired, therefore 5 seconds must have passed since a key
*     // was pressed.  Switch off the LCD back-light.
*     vSetBacklightState( BACKLIGHT_OFF );
* }
*
* // The key press interrupt service routine.
* void vKeyPressEventInterruptHandler( void )
* {
* BaseType_t xHigherPriorityTaskWoken = pdFALSE;
*
*     // Ensure the LCD back-light is on, then reset the timer that is
*     // responsible for turning the back-light off after 5 seconds of
*     // key inactivity.  This is an interrupt service routine so can only
*     // call FreeRTOS API functions that end in "FromISR".
*     vSetBacklightState( BACKLIGHT_ON );
*
*     // xTimerStartFromISR() or xTimerResetFromISR() could be called here
*     // as both cause the timer to re-calculate its expiry time.
*     // xHigherPriorityTaskWoken was initialised to pdFALSE when it was
*     // declared (in this function).
*     if( xTimerResetFromISR( xBacklightTimer, &xHigherPriorityTaskWoken ) !=␣
↪pdPASS )
*     {
*         // The reset command was not executed successfully.  Take appropriate
*         // action here.
*     }
*
*     // Perform the rest of the key processing here.
```

(continues on next page)

(continued from previous page)

```
*
*     // If xHigherPriorityTaskWoken equals pdTRUE, then a context switch
*     // should be performed.  The syntax required to perform a context switch
*     // from inside an ISR varies from port to port, and from compiler to
*     // compiler.  Inspect the demos for the port you are using to find the
*     // actual syntax required.
*     if( xHigherPriorityTaskWoken != pdFALSE )
*     {
*         // Call the interrupt safe yield function here (actual function
*         // depends on the FreeRTOS port being used).
*     }
* }
*
```

Parameters

- **xTimer** –The handle of the timer that is to be started, reset, or restarted.
- **pxHigherPriorityTaskWoken** –The timer service/daemon task spends most of its time in the Blocked state, waiting for messages to arrive on the timer command queue. Calling xTimerResetFromISR() writes a message to the timer command queue, so has the potential to transition the timer service/daemon task out of the Blocked state. If calling xTimerResetFromISR() causes the timer service/daemon task to leave the Blocked state, and the timer service/ daemon task has a priority equal to or greater than the currently executing task (the task that was interrupted), then *pxHigherPriorityTaskWoken will get set to pdTRUE internally within the xTimerResetFromISR() function. If xTimerReset-FromISR() sets this value to pdTRUE then a context switch should be performed before the interrupt exits.

Returns pdFAIL will be returned if the reset command could not be sent to the timer command queue. pdPASS will be returned if the command was successfully sent to the timer command queue. When the command is actually processed will depend on the priority of the timer service/daemon task relative to other tasks in the system, although the timers expiry time is relative to when xTimerResetFromISR() is actually called. The timer service/daemon task priority is set by the configTIMER_TASK_PRIORITY configuration constant.

Type Definitions

typedef struct tmrTimerControl ***TimerHandle_t**

typedef void (***TimerCallbackFunction_t**)(*TimerHandle_t* xTimer)

typedef void (***PendedFunction_t**)(void*, uint32_t)

Event Group API

Header File

- components/freertos/include/freertos/event_groups.h

Functions

EventGroupHandle_t **xEventGroupCreate**(void)

Create a new event group.

Internally, within the FreeRTOS implementation, event groups use a [small] block of memory, in which the event group' s structure is stored. If an event groups is created using xEventGroupCreate() then the required memory is automatically dynamically allocated inside the xEventGroupCreate() function. (see https://www.FreeRTOS.org/a00111.html). If an event group is created using xEventGroupCreateStatic() then

the application writer must instead provide the memory that will get used by the event group. xEventGroupCreateStatic() therefore allows an event group to be created without using any dynamic memory allocation.

Although event groups are not related to ticks, for internal implementation reasons the number of bits available for use in an event group is dependent on the configUSE_16_BIT_TICKS setting in FreeRTOSConfig.h. If configUSE_16_BIT_TICKS is 1 then each event group contains 8 usable bits (bit 0 to bit 7). If configUSE_16_BIT_TICKS is set to 0 then each event group has 24 usable bits (bit 0 to bit 23). The EventBits_t type is used to store event bits within an event group.

Example usage:

```
// Declare a variable to hold the created event group.
EventGroupHandle_t xCreatedEventGroup;

// Attempt to create the event group.
xCreatedEventGroup = xEventGroupCreate();

// Was the event group created successfully?
if( xCreatedEventGroup == NULL )
{
    // The event group was not created because there was insufficient
    // FreeRTOS heap available.
}
else
{
    // The event group was created.
}
```

Returns If the event group was created then a handle to the event group is returned. If there was insufficient FreeRTOS heap available to create the event group then NULL is returned. See https://www.FreeRTOS.org/a00111.html

EventGroupHandle_t **xEventGroupCreateStatic**(StaticEventGroup_t *pxEventGroupBuffer)

Create a new event group.

Internally, within the FreeRTOS implementation, event groups use a [small] block of memory, in which the event group's structure is stored. If an event groups is created using xEventGroupCreate() then the required memory is automatically dynamically allocated inside the xEventGroupCreate() function. (see https://www.FreeRTOS.org/a00111.html). If an event group is created using xEventGroupCreateStatic() then the application writer must instead provide the memory that will get used by the event group. xEventGroupCreateStatic() therefore allows an event group to be created without using any dynamic memory allocation.

Although event groups are not related to ticks, for internal implementation reasons the number of bits available for use in an event group is dependent on the configUSE_16_BIT_TICKS setting in FreeRTOSConfig.h. If configUSE_16_BIT_TICKS is 1 then each event group contains 8 usable bits (bit 0 to bit 7). If configUSE_16_BIT_TICKS is set to 0 then each event group has 24 usable bits (bit 0 to bit 23). The EventBits_t type is used to store event bits within an event group.

Example usage:

```
// StaticEventGroup_t is a publicly accessible structure that has the same
// size and alignment requirements as the real event group structure.  It is
// provided as a mechanism for applications to know the size of the event
// group (which is dependent on the architecture and configuration file
// settings) without breaking the strict data hiding policy by exposing the
// real event group internals.  This StaticEventGroup_t variable is passed
// into the xSemaphoreCreateEventGroupStatic() function and is used to store
// the event group's data structures
StaticEventGroup_t xEventGroupBuffer;
```

(continues on next page)

(continued from previous page)

```
// Create the event group without dynamically allocating any memory.
xEventGroup = xEventGroupCreateStatic( &xEventGroupBuffer );
```

Parameters **pxEventGroupBuffer** –pxEventGroupBuffer must point to a variable of type StaticEventGroup_t, which will be then be used to hold the event group's data structures, removing the need for the memory to be allocated dynamically.

Returns If the event group was created then a handle to the event group is returned. If pxEventGroupBuffer was NULL then NULL is returned.

EventBits_t **xEventGroupWaitBits**(*EventGroupHandle_t* xEventGroup, const *EventBits_t* uxBitsToWaitFor, const BaseType_t xClearOnExit, const BaseType_t xWaitForAllBits, TickType_t xTicksToWait)

[Potentially] block to wait for one or more bits to be set within a previously created event group.

This function cannot be called from an interrupt.

Example usage:

```
#define BIT_0 ( 1 << 0 )
#define BIT_4 ( 1 << 4 )

void aFunction( EventGroupHandle_t xEventGroup )
{
EventBits_t uxBits;
const TickType_t xTicksToWait = 100 / portTICK_PERIOD_MS;

    // Wait a maximum of 100ms for either bit 0 or bit 4 to be set within
    // the event group.  Clear the bits before exiting.
    uxBits = xEventGroupWaitBits(
                xEventGroup,    // The event group being tested.
                BIT_0 | BIT_4,  // The bits within the event group to wait␣
↪for.
                pdTRUE,         // BIT_0 and BIT_4 should be cleared before␣
↪returning.
                pdFALSE,        // Don't wait for both bits, either bit will␣
↪do.
                xTicksToWait ); // Wait a maximum of 100ms for either bit to␣
↪be set.

    if( ( uxBits & ( BIT_0 | BIT_4 ) ) == ( BIT_0 | BIT_4 ) )
    {
        // xEventGroupWaitBits() returned because both bits were set.
    }
    else if( ( uxBits & BIT_0 ) != 0 )
    {
        // xEventGroupWaitBits() returned because just BIT_0 was set.
    }
    else if( ( uxBits & BIT_4 ) != 0 )
    {
        // xEventGroupWaitBits() returned because just BIT_4 was set.
    }
    else
    {
        // xEventGroupWaitBits() returned because xTicksToWait ticks passed
        // without either BIT_0 or BIT_4 becoming set.
    }
}
```

Parameters

- **xEventGroup** –The event group in which the bits are being tested. The event group must have previously been created using a call to xEventGroupCreate().
- **uxBitsToWaitFor** –A bitwise value that indicates the bit or bits to test inside the event group. For example, to wait for bit 0 and/or bit 2 set uxBitsToWaitFor to 0x05. To wait for bits 0 and/or bit 1 and/or bit 2 set uxBitsToWaitFor to 0x07. Etc.
- **xClearOnExit** –If xClearOnExit is set to pdTRUE then any bits within uxBitsToWaitFor that are set within the event group will be cleared before xEventGroupWaitBits() returns if the wait condition was met (if the function returns for a reason other than a timeout). If xClearOnExit is set to pdFALSE then the bits set in the event group are not altered when the call to xEventGroupWaitBits() returns.
- **xWaitForAllBits** –If xWaitForAllBits is set to pdTRUE then xEventGroupWaitBits() will return when either all the bits in uxBitsToWaitFor are set or the specified block time expires. If xWaitForAllBits is set to pdFALSE then xEventGroupWaitBits() will return when any one of the bits set in uxBitsToWaitFor is set or the specified block time expires. The block time is specified by the xTicksToWait parameter.
- **xTicksToWait** –The maximum amount of time (specified in 'ticks') to wait for one/all (depending on the xWaitForAllBits value) of the bits specified by uxBitsToWaitFor to become set.

Returns The value of the event group at the time either the bits being waited for became set, or the block time expired. Test the return value to know which bits were set. If xEventGroupWaitBits() returned because its timeout expired then not all the bits being waited for will be set. If xEventGroupWaitBits() returned because the bits it was waiting for were set then the returned value is the event group value before any bits were automatically cleared in the case that xClearOnExit parameter was set to pdTRUE.

EventBits_t **xEventGroupClearBits** (*EventGroupHandle_t* xEventGroup, const *EventBits_t* uxBitsToClear)

Clear bits within an event group. This function cannot be called from an interrupt.

Example usage:

```
#define BIT_0 ( 1 << 0 )
#define BIT_4 ( 1 << 4 )

void aFunction( EventGroupHandle_t xEventGroup )
{
EventBits_t uxBits;

    // Clear bit 0 and bit 4 in xEventGroup.
    uxBits = xEventGroupClearBits(
                            xEventGroup,    // The event group being updated.
                            BIT_0 | BIT_4 );// The bits being cleared.

    if( ( uxBits & ( BIT_0 | BIT_4 ) ) == ( BIT_0 | BIT_4 ) )
    {
        // Both bit 0 and bit 4 were set before xEventGroupClearBits() was
        // called.  Both will now be clear (not set).
    }
    else if( ( uxBits & BIT_0 ) != 0 )
    {
        // Bit 0 was set before xEventGroupClearBits() was called.  It will
        // now be clear.
    }
    else if( ( uxBits & BIT_4 ) != 0 )
    {
        // Bit 4 was set before xEventGroupClearBits() was called.  It will
        // now be clear.
    }
    else
```

(continues on next page)

(continued from previous page)

```
    {
        // Neither bit 0 nor bit 4 were set in the first place.
    }
}
```

Parameters

- **xEventGroup** –The event group in which the bits are to be cleared.
- **uxBitsToClear** –A bitwise value that indicates the bit or bits to clear in the event group. For example, to clear bit 3 only, set uxBitsToClear to 0x08. To clear bit 3 and bit 0 set uxBitsToClear to 0x09.

Returns The value of the event group before the specified bits were cleared.

EventBits_t **xEventGroupSetBits**(*EventGroupHandle_t* xEventGroup, const *EventBits_t* uxBitsToSet)

Set bits within an event group. This function cannot be called from an interrupt. xEventGroupSetBitsFromISR() is a version that can be called from an interrupt.

Setting bits in an event group will automatically unblock tasks that are blocked waiting for the bits.

Example usage:

```
#define BIT_0 ( 1 << 0 )
#define BIT_4 ( 1 << 4 )

void aFunction( EventGroupHandle_t xEventGroup )
{
EventBits_t uxBits;

    // Set bit 0 and bit 4 in xEventGroup.
    uxBits = xEventGroupSetBits(
                        xEventGroup,    // The event group being updated.
                        BIT_0 | BIT_4 );// The bits being set.

    if( ( uxBits & ( BIT_0 | BIT_4 ) ) == ( BIT_0 | BIT_4 ) )
    {
        // Both bit 0 and bit 4 remained set when the function returned.
    }
    else if( ( uxBits & BIT_0 ) != 0 )
    {
        // Bit 0 remained set when the function returned, but bit 4 was
        // cleared.  It might be that bit 4 was cleared automatically as a
        // task that was waiting for bit 4 was removed from the Blocked
        // state.
    }
    else if( ( uxBits & BIT_4 ) != 0 )
    {
        // Bit 4 remained set when the function returned, but bit 0 was
        // cleared.  It might be that bit 0 was cleared automatically as a
        // task that was waiting for bit 0 was removed from the Blocked
        // state.
    }
    else
    {
        // Neither bit 0 nor bit 4 remained set.  It might be that a task
        // was waiting for both of the bits to be set, and the bits were
        // cleared as the task left the Blocked state.
    }
}
```

Parameters

- **xEventGroup** –The event group in which the bits are to be set.
- **uxBitsToSet** –A bitwise value that indicates the bit or bits to set. For example, to set bit 3 only, set uxBitsToSet to 0x08. To set bit 3 and bit 0 set uxBitsToSet to 0x09.

Returns The value of the event group at the time the call to xEventGroupSetBits() returns. There are two reasons why the returned value might have the bits specified by the uxBitsToSet parameter cleared. First, if setting a bit results in a task that was waiting for the bit leaving the blocked state then it is possible the bit will be cleared automatically (see the xClearBitOnExit parameter of xEventGroupWaitBits()). Second, any unblocked (or otherwise Ready state) task that has a priority above that of the task that called xEventGroupSetBits() will execute and may change the event group value before the call to xEventGroupSetBits() returns.

EventBits_t **xEventGroupSync**(*EventGroupHandle_t* xEventGroup, const *EventBits_t* uxBitsToSet, const *EventBits_t* uxBitsToWaitFor, TickType_t xTicksToWait)

Atomically set bits within an event group, then wait for a combination of bits to be set within the same event group. This functionality is typically used to synchronise multiple tasks, where each task has to wait for the other tasks to reach a synchronisation point before proceeding.

This function cannot be used from an interrupt.

The function will return before its block time expires if the bits specified by the uxBitsToWait parameter are set, or become set within that time. In this case all the bits specified by uxBitsToWait will be automatically cleared before the function returns.

Example usage:

```
// Bits used by the three tasks.
#define TASK_0_BIT      ( 1 << 0 )
#define TASK_1_BIT      ( 1 << 1 )
#define TASK_2_BIT      ( 1 << 2 )

#define ALL_SYNC_BITS ( TASK_0_BIT | TASK_1_BIT | TASK_2_BIT )

// Use an event group to synchronise three tasks.  It is assumed this event
// group has already been created elsewhere.
EventGroupHandle_t xEventBits;

void vTask0( void *pvParameters )
{
EventBits_t uxReturn;
TickType_t xTicksToWait = 100 / portTICK_PERIOD_MS;

  for( ;; )
  {
     // Perform task functionality here.

     // Set bit 0 in the event flag to note this task has reached the
     // sync point.  The other two tasks will set the other two bits defined
     // by ALL_SYNC_BITS.  All three tasks have reached the synchronisation
     // point when all the ALL_SYNC_BITS are set.  Wait a maximum of 100ms
     // for this to happen.
     uxReturn = xEventGroupSync( xEventBits, TASK_0_BIT, ALL_SYNC_BITS,␣
↪xTicksToWait );

     if( ( uxReturn & ALL_SYNC_BITS ) == ALL_SYNC_BITS )
     {
         // All three tasks reached the synchronisation point before the call
         // to xEventGroupSync() timed out.
     }
 }
}
```

(continues on next page)

(continued from previous page)

```
void vTask1( void *pvParameters )
{
  for( ;; )
  {
     // Perform task functionality here.

     // Set bit 1 in the event flag to note this task has reached the
     // synchronisation point.  The other two tasks will set the other two
     // bits defined by ALL_SYNC_BITS.  All three tasks have reached the
     // synchronisation point when all the ALL_SYNC_BITS are set.  Wait
     // indefinitely for this to happen.
     xEventGroupSync( xEventBits, TASK_1_BIT, ALL_SYNC_BITS, portMAX_DELAY );

     // xEventGroupSync() was called with an indefinite block time, so
     // this task will only reach here if the synchronisation was made by all
     // three tasks, so there is no need to test the return value.
  }
}

void vTask2( void *pvParameters )
{
  for( ;; )
  {
     // Perform task functionality here.

     // Set bit 2 in the event flag to note this task has reached the
     // synchronisation point.  The other two tasks will set the other two
     // bits defined by ALL_SYNC_BITS.  All three tasks have reached the
     // synchronisation point when all the ALL_SYNC_BITS are set.  Wait
     // indefinitely for this to happen.
     xEventGroupSync( xEventBits, TASK_2_BIT, ALL_SYNC_BITS, portMAX_DELAY );

     // xEventGroupSync() was called with an indefinite block time, so
     // this task will only reach here if the synchronisation was made by all
     // three tasks, so there is no need to test the return value.
 }
}
```

Parameters

- **xEventGroup** –The event group in which the bits are being tested. The event group must have previously been created using a call to xEventGroupCreate().
- **uxBitsToSet** –The bits to set in the event group before determining if, and possibly waiting for, all the bits specified by the uxBitsToWait parameter are set.
- **uxBitsToWaitFor** –A bitwise value that indicates the bit or bits to test inside the event group. For example, to wait for bit 0 and bit 2 set uxBitsToWaitFor to 0x05. To wait for bits 0 and bit 1 and bit 2 set uxBitsToWaitFor to 0x07. Etc.
- **xTicksToWait** –The maximum amount of time (specified in 'ticks') to wait for all of the bits specified by uxBitsToWaitFor to become set.

Returns The value of the event group at the time either the bits being waited for became set, or the block time expired. Test the return value to know which bits were set. If xEventGroupSync() returned because its timeout expired then not all the bits being waited for will be set. If xEventGroupSync() returned because all the bits it was waiting for were set then the returned value is the event group value before any bits were automatically cleared.

EventBits_t **xEventGroupGetBitsFromISR** (*EventGroupHandle_t* xEventGroup)

A version of xEventGroupGetBits() that can be called from an ISR.

Parameters **xEventGroup** –The event group being queried.

Returns The event group bits at the time xEventGroupGetBitsFromISR() was called.

void **vEventGroupDelete**(*EventGroupHandle_t* xEventGroup)

Delete an event group that was previously created by a call to xEventGroupCreate(). Tasks that are blocked on the event group will be unblocked and obtain 0 as the event group' s value.

Parameters **xEventGroup** –The event group being deleted.

Macros

xEventGroupClearBitsFromISR(xEventGroup, uxBitsToClear)

A version of xEventGroupClearBits() that can be called from an interrupt.

Setting bits in an event group is not a deterministic operation because there are an unknown number of tasks that may be waiting for the bit or bits being set. FreeRTOS does not allow nondeterministic operations to be performed while interrupts are disabled, so protects event groups that are accessed from tasks by suspending the scheduler rather than disabling interrupts. As a result event groups cannot be accessed directly from an interrupt service routine. Therefore xEventGroupClearBitsFromISR() sends a message to the timer task to have the clear operation performed in the context of the timer task.

Example usage:

```
#define BIT_0 ( 1 << 0 )
#define BIT_4 ( 1 << 4 )

// An event group which it is assumed has already been created by a call to
// xEventGroupCreate().
EventGroupHandle_t xEventGroup;

void anInterruptHandler( void )
{
     // Clear bit 0 and bit 4 in xEventGroup.
     xResult = xEventGroupClearBitsFromISR(
                          xEventGroup,     // The event group being updated.
                          BIT_0 | BIT_4 ); // The bits being set.

     if( xResult == pdPASS )
     {
          // The message was posted successfully.
     }
}
```

Parameters

- **xEventGroup** –The event group in which the bits are to be cleared.
- **uxBitsToClear** –A bitwise value that indicates the bit or bits to clear. For example, to clear bit 3 only, set uxBitsToClear to 0x08. To clear bit 3 and bit 0 set uxBitsToClear to 0x09.

Returns If the request to execute the function was posted successfully then pdPASS is returned, otherwise pdFALSE is returned. pdFALSE will be returned if the timer service queue was full.

xEventGroupSetBitsFromISR(xEventGroup, uxBitsToSet, pxHigherPriorityTaskWoken)

A version of xEventGroupSetBits() that can be called from an interrupt.

Setting bits in an event group is not a deterministic operation because there are an unknown number of tasks that may be waiting for the bit or bits being set. FreeRTOS does not allow nondeterministic operations to be performed in interrupts or from critical sections. Therefore xEventGroupSetBitsFromISR() sends a message to the timer task to have the set operation performed in the context of the timer task - where a scheduler lock is used in place of a critical section.

Example usage:

```
#define BIT_0 ( 1 << 0 )
#define BIT_4 ( 1 << 4 )

// An event group which it is assumed has already been created by a call to
// xEventGroupCreate().
EventGroupHandle_t xEventGroup;

void anInterruptHandler( void )
{
BaseType_t xHigherPriorityTaskWoken, xResult;

     // xHigherPriorityTaskWoken must be initialised to pdFALSE.
     xHigherPriorityTaskWoken = pdFALSE;

     // Set bit 0 and bit 4 in xEventGroup.
     xResult = xEventGroupSetBitsFromISR(
                         xEventGroup,    // The event group being updated.
                         BIT_0 | BIT_4   // The bits being set.
                         &xHigherPriorityTaskWoken );

     // Was the message posted successfully?
     if( xResult == pdPASS )
     {
          // If xHigherPriorityTaskWoken is now set to pdTRUE then a context
          // switch should be requested.  The macro used is port specific and
          // will be either portYIELD_FROM_ISR() or portEND_SWITCHING_ISR() -
          // refer to the documentation page for the port being used.
          portYIELD_FROM_ISR( xHigherPriorityTaskWoken );
     }
}
```

Parameters

- **xEventGroup** –The event group in which the bits are to be set.
- **uxBitsToSet** –A bitwise value that indicates the bit or bits to set. For example, to set bit 3 only, set uxBitsToSet to 0x08. To set bit 3 and bit 0 set uxBitsToSet to 0x09.
- **pxHigherPriorityTaskWoken** –As mentioned above, calling this function will result in a message being sent to the timer daemon task. If the priority of the timer daemon task is higher than the priority of the currently running task (the task the interrupt interrupted) then *pxHigherPriorityTaskWoken will be set to pdTRUE by xEventGroupSetBitsFromISR(), indicating that a context switch should be requested before the interrupt exits. For that reason *pxHigherPriorityTaskWoken must be initialised to pdFALSE. See the example code below.

Returns If the request to execute the function was posted successfully then pdPASS is returned, otherwise pdFALSE is returned. pdFALSE will be returned if the timer service queue was full.

xEventGroupGetBits(xEventGroup)

Returns the current value of the bits in an event group. This function cannot be used from an interrupt.

Parameters

- **xEventGroup** –The event group being queried.

Returns The event group bits at the time xEventGroupGetBits() was called.

Type Definitions

typedef struct EventGroupDef_t ***EventGroupHandle_t**

typedef TickType_t **EventBits_t**

Stream Buffer API

Header File

- components/freertos/include/freertos/stream_buffer.h

Functions

size_t **xStreamBufferSend**(*StreamBufferHandle_t* xStreamBuffer, const void *pvTxData, size_t xDataLengthBytes, TickType_t xTicksToWait)

Sends bytes to a stream buffer. The bytes are copied into the stream buffer.

NOTE: Uniquely among FreeRTOS objects, the stream buffer implementation (so also the message buffer implementation, as message buffers are built on top of stream buffers) assumes there is only one task or interrupt that will write to the buffer (the writer), and only one task or interrupt that will read from the buffer (the reader). It is safe for the writer and reader to be different tasks or interrupts, but, unlike other FreeRTOS objects, it is not safe to have multiple different writers or multiple different readers. If there are to be multiple different writers then the application writer must place each call to a writing API function (such as xStreamBufferSend()) inside a critical section and set the send block time to 0. Likewise, if there are to be multiple different readers then the application writer must place each call to a reading API function (such as xStreamBufferReceive()) inside a critical section and set the receive block time to 0.

Use xStreamBufferSend() to write to a stream buffer from a task. Use xStreamBufferSendFromISR() to write to a stream buffer from an interrupt service routine (ISR).

Example use:

```
void vAFunction( StreamBufferHandle_t xStreamBuffer )
{
size_t xBytesSent;
uint8_t ucArrayToSend[] = { 0, 1, 2, 3 };
char *pcStringToSend = "String to send";
const TickType_t x100ms = pdMS_TO_TICKS( 100 );

 // Send an array to the stream buffer, blocking for a maximum of 100ms to
 // wait for enough space to be available in the stream buffer.
 xBytesSent = xStreamBufferSend( xStreamBuffer, ( void * ) ucArrayToSend,␣
↪sizeof( ucArrayToSend ), x100ms );

 if( xBytesSent != sizeof( ucArrayToSend ) )
 {
     // The call to xStreamBufferSend() times out before there was enough
     // space in the buffer for the data to be written, but it did
     // successfully write xBytesSent bytes.
 }

 // Send the string to the stream buffer.  Return immediately if there is not
 // enough space in the buffer.
 xBytesSent = xStreamBufferSend( xStreamBuffer, ( void * ) pcStringToSend,␣
↪strlen( pcStringToSend ), 0 );

 if( xBytesSent != strlen( pcStringToSend ) )
 {
     // The entire string could not be added to the stream buffer because
     // there was not enough free space in the buffer, but xBytesSent bytes
     // were sent.  Could try again to send the remaining bytes.
 }
}
```

Parameters

- **xStreamBuffer** –The handle of the stream buffer to which a stream is being sent.

- **pvTxData** –A pointer to the buffer that holds the bytes to be copied into the stream buffer.
- **xDataLengthBytes** –The maximum number of bytes to copy from pvTxData into the stream buffer.
- **xTicksToWait** –The maximum amount of time the task should remain in the Blocked state to wait for enough space to become available in the stream buffer, should the stream buffer contain too little space to hold the another xDataLengthBytes bytes. The block time is specified in tick periods, so the absolute time it represents is dependent on the tick frequency. The macro pdMS_TO_TICKS() can be used to convert a time specified in milliseconds into a time specified in ticks. Setting xTicksToWait to portMAX_DELAY will cause the task to wait indefinitely (without timing out), provided INCLUDE_vTaskSuspend is set to 1 in FreeRTOSConfig.h. If a task times out before it can write all xDataLengthBytes into the buffer it will still write as many bytes as possible. A task does not use any CPU time when it is in the blocked state.

Returns The number of bytes written to the stream buffer. If a task times out before it can write all xDataLengthBytes into the buffer it will still write as many bytes as possible.

size_t **xStreamBufferSendFromISR**(*StreamBufferHandle_t* xStreamBuffer, const void *pvTxData, size_t xDataLengthBytes, BaseType_t *const pxHigherPriorityTaskWoken)

Interrupt safe version of the API function that sends a stream of bytes to the stream buffer.

NOTE: Uniquely among FreeRTOS objects, the stream buffer implementation (so also the message buffer implementation, as message buffers are built on top of stream buffers) assumes there is only one task or interrupt that will write to the buffer (the writer), and only one task or interrupt that will read from the buffer (the reader). It is safe for the writer and reader to be different tasks or interrupts, but, unlike other FreeRTOS objects, it is not safe to have multiple different writers or multiple different readers. If there are to be multiple different writers then the application writer must place each call to a writing API function (such as xStreamBufferSend()) inside a critical section and set the send block time to 0. Likewise, if there are to be multiple different readers then the application writer must place each call to a reading API function (such as xStreamBufferReceive()) inside a critical section and set the receive block time to 0.

Use xStreamBufferSend() to write to a stream buffer from a task. Use xStreamBufferSendFromISR() to write to a stream buffer from an interrupt service routine (ISR).

Example use:

```
// A stream buffer that has already been created.
StreamBufferHandle_t xStreamBuffer;

void vAnInterruptServiceRoutine( void )
{
size_t xBytesSent;
char *pcStringToSend = "String to send";
BaseType_t xHigherPriorityTaskWoken = pdFALSE; // Initialised to pdFALSE.

 // Attempt to send the string to the stream buffer.
 xBytesSent = xStreamBufferSendFromISR( xStreamBuffer,
                                        ( void * ) pcStringToSend,
                                        strlen( pcStringToSend ),
                                        &xHigherPriorityTaskWoken );

 if( xBytesSent != strlen( pcStringToSend ) )
 {
     // There was not enough free space in the stream buffer for the entire
     // string to be written, ut xBytesSent bytes were written.
 }

 // If xHigherPriorityTaskWoken was set to pdTRUE inside
 // xStreamBufferSendFromISR() then a task that has a priority above the
 // priority of the currently executing task was unblocked and a context
```

(continues on next page)

(continued from previous page)

```
 // switch should be performed to ensure the ISR returns to the unblocked
 // task.  In most FreeRTOS ports this is done by simply passing
 // xHigherPriorityTaskWoken into taskYIELD_FROM_ISR(), which will test the
 // variables value, and perform the context switch if necessary.  Check the
 // documentation for the port in use for port specific instructions.
 taskYIELD_FROM_ISR( xHigherPriorityTaskWoken );
}
```

Parameters

- **xStreamBuffer** –The handle of the stream buffer to which a stream is being sent.
- **pvTxData** –A pointer to the data that is to be copied into the stream buffer.
- **xDataLengthBytes** –The maximum number of bytes to copy from pvTxData into the stream buffer.
- **pxHigherPriorityTaskWoken** –It is possible that a stream buffer will have a task blocked on it waiting for data. Calling xStreamBufferSendFromISR() can make data available, and so cause a task that was waiting for data to leave the Blocked state. If calling xStreamBufferSendFromISR() causes a task to leave the Blocked state, and the unblocked task has a priority higher than the currently executing task (the task that was interrupted), then, internally, xStreamBufferSendFromISR() will set *pxHigherPriorityTaskWoken to pdTRUE. If xStreamBufferSendFromISR() sets this value to pdTRUE, then normally a context switch should be performed before the interrupt is exited. This will ensure that the interrupt returns directly to the highest priority Ready state task. *pxHigherPriorityTaskWoken should be set to pdFALSE before it is passed into the function. See the example code below for an example.

Returns The number of bytes actually written to the stream buffer, which will be less than xDataLengthBytes if the stream buffer didn't have enough free space for all the bytes to be written.

size_t **xStreamBufferReceive**(*StreamBufferHandle_t* xStreamBuffer, void *pvRxData, size_t xBufferLengthBytes, TickType_t xTicksToWait)

Receives bytes from a stream buffer.

NOTE: Uniquely among FreeRTOS objects, the stream buffer implementation (so also the message buffer implementation, as message buffers are built on top of stream buffers) assumes there is only one task or interrupt that will write to the buffer (the writer), and only one task or interrupt that will read from the buffer (the reader). It is safe for the writer and reader to be different tasks or interrupts, but, unlike other FreeRTOS objects, it is not safe to have multiple different writers or multiple different readers. If there are to be multiple different writers then the application writer must place each call to a writing API function (such as xStreamBufferSend()) inside a critical section and set the send block time to 0. Likewise, if there are to be multiple different readers then the application writer must place each call to a reading API function (such as xStreamBufferReceive()) inside a critical section and set the receive block time to 0.

Use xStreamBufferReceive() to read from a stream buffer from a task. Use xStreamBufferReceiveFromISR() to read from a stream buffer from an interrupt service routine (ISR).

Example use:

```
void vAFunction( StreamBuffer_t xStreamBuffer )
{
uint8_t ucRxData[ 20 ];
size_t xReceivedBytes;
const TickType_t xBlockTime = pdMS_TO_TICKS( 20 );

 // Receive up to another sizeof( ucRxData ) bytes from the stream buffer.
 // Wait in the Blocked state (so not using any CPU processing time) for a
 // maximum of 100ms for the full sizeof( ucRxData ) number of bytes to be
 // available.
 xReceivedBytes = xStreamBufferReceive( xStreamBuffer,
```

(continues on next page)

(continued from previous page)

```
                                        ( void * ) ucRxData,
                                        sizeof( ucRxData ),
                                        xBlockTime );

 if( xReceivedBytes > 0 )
 {
     // A ucRxData contains another xRecievedBytes bytes of data, which can
     // be processed here....
 }
}
```

Parameters

- **xStreamBuffer** –The handle of the stream buffer from which bytes are to be received.
- **pvRxData** –A pointer to the buffer into which the received bytes will be copied.
- **xBufferLengthBytes** –The length of the buffer pointed to by the pvRxData parameter. This sets the maximum number of bytes to receive in one call. xStreamBufferReceive will return as many bytes as possible up to a maximum set by xBufferLengthBytes.
- **xTicksToWait** –The maximum amount of time the task should remain in the Blocked state to wait for data to become available if the stream buffer is empty. xStreamBufferReceive() will return immediately if xTicksToWait is zero. The block time is specified in tick periods, so the absolute time it represents is dependent on the tick frequency. The macro pdMS_TO_TICKS() can be used to convert a time specified in milliseconds into a time specified in ticks. Setting xTicksToWait to portMAX_DELAY will cause the task to wait indefinitely (without timing out), provided INCLUDE_vTaskSuspend is set to 1 in FreeRTOSConfig.h. A task does not use any CPU time when it is in the Blocked state.

Returns The number of bytes actually read from the stream buffer, which will be less than xBufferLengthBytes if the call to xStreamBufferReceive() timed out before xBufferLengthBytes were available.

size_t **xStreamBufferReceiveFromISR**(*StreamBufferHandle_t* xStreamBuffer, void *pvRxData, size_t xBufferLengthBytes, BaseType_t *const pxHigherPriorityTaskWoken)

An interrupt safe version of the API function that receives bytes from a stream buffer.

Use xStreamBufferReceive() to read bytes from a stream buffer from a task. Use xStreamBufferReceiveFromISR() to read bytes from a stream buffer from an interrupt service routine (ISR).

Example use:

```
// A stream buffer that has already been created.
StreamBuffer_t xStreamBuffer;

void vAnInterruptServiceRoutine( void )
{
uint8_t ucRxData[ 20 ];
size_t xReceivedBytes;
BaseType_t xHigherPriorityTaskWoken = pdFALSE;  // Initialised to pdFALSE.

 // Receive the next stream from the stream buffer.
 xReceivedBytes = xStreamBufferReceiveFromISR( xStreamBuffer,
                                               ( void * ) ucRxData,
                                               sizeof( ucRxData ),
                                               &xHigherPriorityTaskWoken );

 if( xReceivedBytes > 0 )
 {
     // ucRxData contains xReceivedBytes read from the stream buffer.
```

(continues on next page)

(continued from previous page)

```
    // Process the stream here....
}

// If xHigherPriorityTaskWoken was set to pdTRUE inside
// xStreamBufferReceiveFromISR() then a task that has a priority above the
// priority of the currently executing task was unblocked and a context
// switch should be performed to ensure the ISR returns to the unblocked
// task.  In most FreeRTOS ports this is done by simply passing
// xHigherPriorityTaskWoken into taskYIELD_FROM_ISR(), which will test the
// variables value, and perform the context switch if necessary.  Check the
// documentation for the port in use for port specific instructions.
taskYIELD_FROM_ISR( xHigherPriorityTaskWoken );
}
```

Parameters

- **xStreamBuffer** –The handle of the stream buffer from which a stream is being received.
- **pvRxData** –A pointer to the buffer into which the received bytes are copied.
- **xBufferLengthBytes** –The length of the buffer pointed to by the pvRxData parameter. This sets the maximum number of bytes to receive in one call. xStreamBufferReceive will return as many bytes as possible up to a maximum set by xBufferLengthBytes.
- **pxHigherPriorityTaskWoken** –It is possible that a stream buffer will have a task blocked on it waiting for space to become available. Calling xStreamBufferReceiveFromISR() can make space available, and so cause a task that is waiting for space to leave the Blocked state. If calling xStreamBufferReceiveFromISR() causes a task to leave the Blocked state, and the unblocked task has a priority higher than the currently executing task (the task that was interrupted), then, internally, xStreamBufferReceiveFromISR() will set *pxHigherPriorityTaskWoken to pdTRUE. If xStreamBufferReceiveFromISR() sets this value to pdTRUE, then normally a context switch should be performed before the interrupt is exited. That will ensure the interrupt returns directly to the highest priority Ready state task. *pxHigherPriorityTaskWoken should be set to pdFALSE before it is passed into the function. See the code example below for an example.

Returns The number of bytes read from the stream buffer, if any.

void **vStreamBufferDelete**(*StreamBufferHandle_t* xStreamBuffer)

Deletes a stream buffer that was previously created using a call to xStreamBufferCreate() or xStreamBufferCreateStatic(). If the stream buffer was created using dynamic memory (that is, by xStreamBufferCreate()), then the allocated memory is freed.

A stream buffer handle must not be used after the stream buffer has been deleted.

Parameters **xStreamBuffer** –The handle of the stream buffer to be deleted.

BaseType_t **xStreamBufferIsFull**(*StreamBufferHandle_t* xStreamBuffer)

Queries a stream buffer to see if it is full. A stream buffer is full if it does not have any free space, and therefore cannot accept any more data.

Parameters **xStreamBuffer** –The handle of the stream buffer being queried.
Returns If the stream buffer is full then pdTRUE is returned. Otherwise pdFALSE is returned.

BaseType_t **xStreamBufferIsEmpty**(*StreamBufferHandle_t* xStreamBuffer)

Queries a stream buffer to see if it is empty. A stream buffer is empty if it does not contain any data.

Parameters **xStreamBuffer** –The handle of the stream buffer being queried.
Returns If the stream buffer is empty then pdTRUE is returned. Otherwise pdFALSE is returned.

BaseType_t **xStreamBufferReset**(*StreamBufferHandle_t* xStreamBuffer)

Resets a stream buffer to its initial, empty, state. Any data that was in the stream buffer is discarded. A stream buffer can only be reset if there are no tasks blocked waiting to either send to or receive from the stream buffer.

Parameters **xStreamBuffer** –The handle of the stream buffer being reset.

Returns If the stream buffer is reset then pdPASS is returned. If there was a task blocked waiting to send to or read from the stream buffer then the stream buffer is not reset and pdFAIL is returned.

size_t **xStreamBufferSpacesAvailable** (*StreamBufferHandle_t* xStreamBuffer)

Queries a stream buffer to see how much free space it contains, which is equal to the amount of data that can be sent to the stream buffer before it is full.

Parameters **xStreamBuffer** –The handle of the stream buffer being queried.

Returns The number of bytes that can be written to the stream buffer before the stream buffer would be full.

size_t **xStreamBufferBytesAvailable** (*StreamBufferHandle_t* xStreamBuffer)

Queries a stream buffer to see how much data it contains, which is equal to the number of bytes that can be read from the stream buffer before the stream buffer would be empty.

Parameters **xStreamBuffer** –The handle of the stream buffer being queried.

Returns The number of bytes that can be read from the stream buffer before the stream buffer would be empty.

BaseType_t **xStreamBufferSetTriggerLevel** (*StreamBufferHandle_t* xStreamBuffer, size_t xTriggerLevel)

A stream buffer's trigger level is the number of bytes that must be in the stream buffer before a task that is blocked on the stream buffer to wait for data is moved out of the blocked state. For example, if a task is blocked on a read of an empty stream buffer that has a trigger level of 1 then the task will be unblocked when a single byte is written to the buffer or the task's block time expires. As another example, if a task is blocked on a read of an empty stream buffer that has a trigger level of 10 then the task will not be unblocked until the stream buffer contains at least 10 bytes or the task's block time expires. If a reading task's block time expires before the trigger level is reached then the task will still receive however many bytes are actually available. Setting a trigger level of 0 will result in a trigger level of 1 being used. It is not valid to specify a trigger level that is greater than the buffer size.

A trigger level is set when the stream buffer is created, and can be modified using xStreamBufferSetTriggerLevel().

Parameters

- **xStreamBuffer** –The handle of the stream buffer being updated.
- **xTriggerLevel** –The new trigger level for the stream buffer.

Returns If xTriggerLevel was less than or equal to the stream buffer's length then the trigger level will be updated and pdTRUE is returned. Otherwise pdFALSE is returned.

BaseType_t **xStreamBufferSendCompletedFromISR** (*StreamBufferHandle_t* xStreamBuffer, BaseType_t *pxHigherPriorityTaskWoken)

For advanced users only.

The sbSEND_COMPLETED() macro is called from within the FreeRTOS APIs when data is sent to a message buffer or stream buffer. If there was a task that was blocked on the message or stream buffer waiting for data to arrive then the sbSEND_COMPLETED() macro sends a notification to the task to remove it from the Blocked state. xStreamBufferSendCompletedFromISR() does the same thing. It is provided to enable application writers to implement their own version of sbSEND_COMPLETED(), and MUST NOT BE USED AT ANY OTHER TIME.

See the example implemented in FreeRTOS/Demo/Minimal/MessageBufferAMP.c for additional information.

Parameters

- **xStreamBuffer** –The handle of the stream buffer to which data was written.
- **pxHigherPriorityTaskWoken** –*pxHigherPriorityTaskWoken should be initialised to pdFALSE before it is passed into xStreamBufferSendCompletedFromISR(). If calling xStreamBufferSendCompletedFromISR() removes a task from the Blocked state, and the task has a priority above the priority of the currently running task, then *pxHigherPriorityTaskWoken will get set to pdTRUE indicating that a context switch should be performed before exiting the ISR.

Returns If a task was removed from the Blocked state then pdTRUE is returned. Otherwise pdFALSE is returned.

BaseType_t **xStreamBufferReceiveCompletedFromISR**(*StreamBufferHandle_t* xStreamBuffer, BaseType_t *pxHigherPriorityTaskWoken)

For advanced users only.

The sbRECEIVE_COMPLETED() macro is called from within the FreeRTOS APIs when data is read out of a message buffer or stream buffer. If there was a task that was blocked on the message or stream buffer waiting for data to arrive then the sbRECEIVE_COMPLETED() macro sends a notification to the task to remove it from the Blocked state. xStreamBufferReceiveCompletedFromISR() does the same thing. It is provided to enable application writers to implement their own version of sbRECEIVE_COMPLETED(), and MUST NOT BE USED AT ANY OTHER TIME.

See the example implemented in FreeRTOS/Demo/Minimal/MessageBufferAMP.c for additional information.

Parameters

- **xStreamBuffer** –The handle of the stream buffer from which data was read.
- **pxHigherPriorityTaskWoken** –*pxHigherPriorityTaskWoken should be initialised to pdFALSE before it is passed into xStreamBufferReceiveCompletedFromISR(). If calling xStreamBufferReceiveCompletedFromISR() removes a task from the Blocked state, and the task has a priority above the priority of the currently running task, then *pxHigherPriorityTaskWoken will get set to pdTRUE indicating that a context switch should be performed before exiting the ISR.

Returns If a task was removed from the Blocked state then pdTRUE is returned. Otherwise pdFALSE is returned.

Macros

xStreamBufferCreate(xBufferSizeBytes, xTriggerLevelBytes)

Creates a new stream buffer using dynamically allocated memory. See xStreamBufferCreateStatic() for a version that uses statically allocated memory (memory that is allocated at compile time).

configSUPPORT_DYNAMIC_ALLOCATION must be set to 1 or left undefined in FreeRTOSConfig.h for xStreamBufferCreate() to be available.

Example use:

```
void vAFunction( void )
{
StreamBufferHandle_t xStreamBuffer;
const size_t xStreamBufferSizeBytes = 100, xTriggerLevel = 10;

 // Create a stream buffer that can hold 100 bytes.  The memory used to hold
 // both the stream buffer structure and the data in the stream buffer is
 // allocated dynamically.
 xStreamBuffer = xStreamBufferCreate( xStreamBufferSizeBytes, xTriggerLevel );

 if( xStreamBuffer == NULL )
 {
     // There was not enough heap memory space available to create the
     // stream buffer.
 }
 else
 {
     // The stream buffer was created successfully and can now be used.
 }
}
```

Parameters

- **xBufferSizeBytes** –The total number of bytes the stream buffer will be able to hold at any one time.
- **xTriggerLevelBytes** –The number of bytes that must be in the stream buffer before a task that is blocked on the stream buffer to wait for data is moved out of the blocked state. For example, if a task is blocked on a read of an empty stream buffer that has a trigger level of 1 then the task will be unblocked when a single byte is written to the buffer or the task's block time expires. As another example, if a task is blocked on a read of an empty stream buffer that has a trigger level of 10 then the task will not be unblocked until the stream buffer contains at least 10 bytes or the task's block time expires. If a reading task's block time expires before the trigger level is reached then the task will still receive however many bytes are actually available. Setting a trigger level of 0 will result in a trigger level of 1 being used. It is not valid to specify a trigger level that is greater than the buffer size.

Returns If NULL is returned, then the stream buffer cannot be created because there is insufficient heap memory available for FreeRTOS to allocate the stream buffer data structures and storage area. A non-NULL value being returned indicates that the stream buffer has been created successfully - the returned value should be stored as the handle to the created stream buffer.

xStreamBufferCreateStatic(xBufferSizeBytes, xTriggerLevelBytes, pucStreamBufferStorageArea, pxStaticStreamBuffer)

Creates a new stream buffer using statically allocated memory. See xStreamBufferCreate() for a version that uses dynamically allocated memory.

configSUPPORT_STATIC_ALLOCATION must be set to 1 in FreeRTOSConfig.h for xStreamBufferCreateStatic() to be available.

Example use:

```
// Used to dimension the array used to hold the streams.  The available space
// will actually be one less than this, so 999.
#define STORAGE_SIZE_BYTES 1000

// Defines the memory that will actually hold the streams within the stream
// buffer.
static uint8_t ucStorageBuffer[ STORAGE_SIZE_BYTES ];

// The variable used to hold the stream buffer structure.
StaticStreamBuffer_t xStreamBufferStruct;

void MyFunction( void )
{
StreamBufferHandle_t xStreamBuffer;
const size_t xTriggerLevel = 1;

 xStreamBuffer = xStreamBufferCreateStatic( sizeof( ucBufferStorage ),
                                            xTriggerLevel,
                                            ucBufferStorage,
                                            &xStreamBufferStruct );

 // As neither the pucStreamBufferStorageArea or pxStaticStreamBuffer
 // parameters were NULL, xStreamBuffer will not be NULL, and can be used to
 // reference the created stream buffer in other stream buffer API calls.

 // Other code that uses the stream buffer can go here.
}
```

Parameters

- **xBufferSizeBytes** –The size, in bytes, of the buffer pointed to by the pucStreamBufferStorageArea parameter.

- **xTriggerLevelBytes** –The number of bytes that must be in the stream buffer before a task that is blocked on the stream buffer to wait for data is moved out of the blocked state. For example, if a task is blocked on a read of an empty stream buffer that has a trigger level of 1 then the task will be unblocked when a single byte is written to the buffer or the task's block time expires. As another example, if a task is blocked on a read of an empty stream buffer that has a trigger level of 10 then the task will not be unblocked until the stream buffer contains at least 10 bytes or the task's block time expires. If a reading task's block time expires before the trigger level is reached then the task will still receive however many bytes are actually available. Setting a trigger level of 0 will result in a trigger level of 1 being used. It is not valid to specify a trigger level that is greater than the buffer size.
- **pucStreamBufferStorageArea** –Must point to a uint8_t array that is at least xBufferSizeBytes + 1 big. This is the array to which streams are copied when they are written to the stream buffer.
- **pxStaticStreamBuffer** –Must point to a variable of type StaticStreamBuffer_t, which will be used to hold the stream buffer's data structure.

Returns If the stream buffer is created successfully then a handle to the created stream buffer is returned. If either pucStreamBufferStorageArea or pxStaticstreamBuffer are NULL then NULL is returned.

Type Definitions

typedef struct StreamBufferDef_t ***StreamBufferHandle_t**

Message Buffer API

Header File

- components/freertos/include/freertos/message_buffer.h

Macros

xMessageBufferCreate(xBufferSizeBytes)

Creates a new message buffer using dynamically allocated memory. See xMessageBufferCreateStatic() for a version that uses statically allocated memory (memory that is allocated at compile time).

configSUPPORT_DYNAMIC_ALLOCATION must be set to 1 or left undefined in FreeRTOSConfig.h for xMessageBufferCreate() to be available.

Example use:

```
void vAFunction( void )
{
MessageBufferHandle_t xMessageBuffer;
const size_t xMessageBufferSizeBytes = 100;

 // Create a message buffer that can hold 100 bytes.  The memory used to hold
 // both the message buffer structure and the messages themselves is allocated
 // dynamically.  Each message added to the buffer consumes an additional 4
 // bytes which are used to hold the lengh of the message.
 xMessageBuffer = xMessageBufferCreate( xMessageBufferSizeBytes );

 if( xMessageBuffer == NULL )
 {
     // There was not enough heap memory space available to create the
     // message buffer.
 }
```

(continues on next page)

(continued from previous page)

```
else
{
    // The message buffer was created successfully and can now be used.
}
```

Parameters

- **xBufferSizeBytes** –The total number of bytes (not messages) the message buffer will be able to hold at any one time. When a message is written to the message buffer an additional sizeof(size_t) bytes are also written to store the message's length. sizeof(size_t) is typically 4 bytes on a 32-bit architecture, so on most 32-bit architectures a 10 byte message will take up 14 bytes of message buffer space.

Returns If NULL is returned, then the message buffer cannot be created because there is insufficient heap memory available for FreeRTOS to allocate the message buffer data structures and storage area. A non-NULL value being returned indicates that the message buffer has been created successfully - the returned value should be stored as the handle to the created message buffer.

xMessageBufferCreateStatic(xBufferSizeBytes, pucMessageBufferStorageArea, pxStaticMessageBuffer)

Creates a new message buffer using statically allocated memory. See xMessageBufferCreate() for a version that uses dynamically allocated memory.

Example use:

```
// Used to dimension the array used to hold the messages.  The available space
// will actually be one less than this, so 999.
#define STORAGE_SIZE_BYTES 1000

// Defines the memory that will actually hold the messages within the message
// buffer.
static uint8_t ucStorageBuffer[ STORAGE_SIZE_BYTES ];

// The variable used to hold the message buffer structure.
StaticMessageBuffer_t xMessageBufferStruct;

void MyFunction( void )
{
MessageBufferHandle_t xMessageBuffer;

 xMessageBuffer = xMessageBufferCreateStatic( sizeof( ucBufferStorage ),
                                              ucBufferStorage,
                                              &xMessageBufferStruct );

 // As neither the pucMessageBufferStorageArea or pxStaticMessageBuffer
 // parameters were NULL, xMessageBuffer will not be NULL, and can be used to
 // reference the created message buffer in other message buffer API calls.

 // Other code that uses the message buffer can go here.
}
```

Parameters

- **xBufferSizeBytes** –The size, in bytes, of the buffer pointed to by the pucMessageBufferStorageArea parameter. When a message is written to the message buffer an additional sizeof(size_t) bytes are also written to store the message's length. sizeof(size_t) is typically 4 bytes on a 32-bit architecture, so on most 32-bit architecture a 10 byte message will take up 14 bytes of message buffer space. The maximum number of bytes that can be stored in the message buffer is actually (xBufferSizeBytes - 1).

- **pucMessageBufferStorageArea** –Must point to a uint8_t array that is at least xBufferSizeBytes + 1 big. This is the array to which messages are copied when they are written to the message buffer.
- **pxStaticMessageBuffer** –Must point to a variable of type StaticMessageBuffer_t, which will be used to hold the message buffer's data structure.

Returns If the message buffer is created successfully then a handle to the created message buffer is returned. If either pucMessageBufferStorageArea or pxStaticmessageBuffer are NULL then NULL is returned.

xMessageBufferSend(xMessageBuffer, pvTxData, xDataLengthBytes, xTicksToWait)

Sends a discrete message to the message buffer. The message can be any length that fits within the buffer's free space, and is copied into the buffer.

NOTE: Uniquely among FreeRTOS objects, the stream buffer implementation (so also the message buffer implementation, as message buffers are built on top of stream buffers) assumes there is only one task or interrupt that will write to the buffer (the writer), and only one task or interrupt that will read from the buffer (the reader). It is safe for the writer and reader to be different tasks or interrupts, but, unlike other FreeRTOS objects, it is not safe to have multiple different writers or multiple different readers. If there are to be multiple different writers then the application writer must place each call to a writing API function (such as xMessageBufferSend()) inside a critical section and set the send block time to 0. Likewise, if there are to be multiple different readers then the application writer must place each call to a reading API function (such as xMessageBufferRead()) inside a critical section and set the receive block time to 0.

Use xMessageBufferSend() to write to a message buffer from a task. Use xMessageBufferSendFromISR() to write to a message buffer from an interrupt service routine (ISR).

Example use:

```
void vAFunction( MessageBufferHandle_t xMessageBuffer )
{
size_t xBytesSent;
uint8_t ucArrayToSend[] = { 0, 1, 2, 3 };
char *pcStringToSend = "String to send";
const TickType_t x100ms = pdMS_TO_TICKS( 100 );

 // Send an array to the message buffer, blocking for a maximum of 100ms to
 // wait for enough space to be available in the message buffer.
 xBytesSent = xMessageBufferSend( xMessageBuffer, ( void * ) ucArrayToSend,␣
↪sizeof( ucArrayToSend ), x100ms );

 if( xBytesSent != sizeof( ucArrayToSend ) )
 {
     // The call to xMessageBufferSend() times out before there was enough
     // space in the buffer for the data to be written.
 }

 // Send the string to the message buffer.  Return immediately if there is
 // not enough space in the buffer.
 xBytesSent = xMessageBufferSend( xMessageBuffer, ( void * ) pcStringToSend,␣
↪strlen( pcStringToSend ), 0 );

 if( xBytesSent != strlen( pcStringToSend ) )
 {
     // The string could not be added to the message buffer because there was
     // not enough free space in the buffer.
 }
}
```

Parameters

- **xMessageBuffer** –The handle of the message buffer to which a message is being sent.

- **pvTxData** –A pointer to the message that is to be copied into the message buffer.
- **xDataLengthBytes** –The length of the message. That is, the number of bytes to copy from pvTxData into the message buffer. When a message is written to the message buffer an additional sizeof(size_t) bytes are also written to store the message's length. sizeof(size_t) is typically 4 bytes on a 32-bit architecture, so on most 32-bit architecture setting xDataLengthBytes to 20 will reduce the free space in the message buffer by 24 bytes (20 bytes of message data and 4 bytes to hold the message length).
- **xTicksToWait** –The maximum amount of time the calling task should remain in the Blocked state to wait for enough space to become available in the message buffer, should the message buffer have insufficient space when xMessageBufferSend() is called. The calling task will never block if xTicksToWait is zero. The block time is specified in tick periods, so the absolute time it represents is dependent on the tick frequency. The macro pdMS_TO_TICKS() can be used to convert a time specified in milliseconds into a time specified in ticks. Setting xTicksToWait to portMAX_DELAY will cause the task to wait indefinitely (without timing out), provided INCLUDE_vTaskSuspend is set to 1 in FreeRTOSConfig.h. Tasks do not use any CPU time when they are in the Blocked state.

Returns The number of bytes written to the message buffer. If the call to xMessageBufferSend() times out before there was enough space to write the message into the message buffer then zero is returned. If the call did not time out then xDataLengthBytes is returned.

xMessageBufferSendFromISR(xMessageBuffer, pvTxData, xDataLengthBytes, pxHigherPriorityTaskWoken)

Interrupt safe version of the API function that sends a discrete message to the message buffer. The message can be any length that fits within the buffer's free space, and is copied into the buffer.

NOTE: Uniquely among FreeRTOS objects, the stream buffer implementation (so also the message buffer implementation, as message buffers are built on top of stream buffers) assumes there is only one task or interrupt that will write to the buffer (the writer), and only one task or interrupt that will read from the buffer (the reader). It is safe for the writer and reader to be different tasks or interrupts, but, unlike other FreeRTOS objects, it is not safe to have multiple different writers or multiple different readers. If there are to be multiple different writers then the application writer must place each call to a writing API function (such as xMessageBufferSend()) inside a critical section and set the send block time to 0. Likewise, if there are to be multiple different readers then the application writer must place each call to a reading API function (such as xMessageBufferRead()) inside a critical section and set the receive block time to 0.

Use xMessageBufferSend() to write to a message buffer from a task. Use xMessageBufferSendFromISR() to write to a message buffer from an interrupt service routine (ISR).

Example use:

```
// A message buffer that has already been created.
MessageBufferHandle_t xMessageBuffer;

void vAnInterruptServiceRoutine( void )
{
size_t xBytesSent;
char *pcStringToSend = "String to send";
BaseType_t xHigherPriorityTaskWoken = pdFALSE; // Initialised to pdFALSE.

 // Attempt to send the string to the message buffer.
 xBytesSent = xMessageBufferSendFromISR( xMessageBuffer,
                                         ( void * ) pcStringToSend,
                                         strlen( pcStringToSend ),
                                         &xHigherPriorityTaskWoken );

 if( xBytesSent != strlen( pcStringToSend ) )
 {
     // The string could not be added to the message buffer because there was
     // not enough free space in the buffer.
```

(continues on next page)

(continued from previous page)

```
 }

 // If xHigherPriorityTaskWoken was set to pdTRUE inside
 // xMessageBufferSendFromISR() then a task that has a priority above the
 // priority of the currently executing task was unblocked and a context
 // switch should be performed to ensure the ISR returns to the unblocked
 // task.  In most FreeRTOS ports this is done by simply passing
 // xHigherPriorityTaskWoken into portYIELD_FROM_ISR(), which will test the
 // variables value, and perform the context switch if necessary.  Check the
 // documentation for the port in use for port specific instructions.
 portYIELD_FROM_ISR( xHigherPriorityTaskWoken );
}
```

Parameters

- **xMessageBuffer** –The handle of the message buffer to which a message is being sent.
- **pvTxData** –A pointer to the message that is to be copied into the message buffer.
- **xDataLengthBytes** –The length of the message. That is, the number of bytes to copy from pvTxData into the message buffer. When a message is written to the message buffer an additional sizeof(size_t) bytes are also written to store the message ' s length. sizeof(size_t) is typically 4 bytes on a 32-bit architecture, so on most 32-bit architecture setting xDataLengthBytes to 20 will reduce the free space in the message buffer by 24 bytes (20 bytes of message data and 4 bytes to hold the message length).
- **pxHigherPriorityTaskWoken** –It is possible that a message buffer will have a task blocked on it waiting for data. Calling xMessageBufferSendFromISR() can make data available, and so cause a task that was waiting for data to leave the Blocked state. If calling xMessageBufferSendFromISR() causes a task to leave the Blocked state, and the unblocked task has a priority higher than the currently executing task (the task that was interrupted), then, internally, xMessageBufferSendFromISR() will set *pxHigherPriority-TaskWoken to pdTRUE. If xMessageBufferSendFromISR() sets this value to pdTRUE, then normally a context switch should be performed before the interrupt is exited. This will ensure that the interrupt returns directly to the highest priority Ready state task. *px-HigherPriorityTaskWoken should be set to pdFALSE before it is passed into the function. See the code example below for an example.

Returns The number of bytes actually written to the message buffer. If the message buffer didn' t have enough free space for the message to be stored then 0 is returned, otherwise xDataL-engthBytes is returned.

xMessageBufferReceive(xMessageBuffer, pvRxData, xBufferLengthBytes, xTicksToWait)

Receives a discrete message from a message buffer. Messages can be of variable length and are copied out of the buffer.

NOTE: Uniquely among FreeRTOS objects, the stream buffer implementation (so also the message buffer implementation, as message buffers are built on top of stream buffers) assumes there is only one task or interrupt that will write to the buffer (the writer), and only one task or interrupt that will read from the buffer (the reader). It is safe for the writer and reader to be different tasks or interrupts, but, unlike other FreeRTOS objects, it is not safe to have multiple different writers or multiple different readers. If there are to be multiple different writers then the application writer must place each call to a writing API function (such as xMessageBufferSend()) inside a critical section and set the send block time to 0. Likewise, if there are to be multiple different readers then the application writer must place each call to a reading API function (such as xMessageBufferRead()) inside a critical section and set the receive block time to 0.

Use xMessageBufferReceive() to read from a message buffer from a task. Use xMessageBufferReceive-FromISR() to read from a message buffer from an interrupt service routine (ISR).

Example use:

```
void vAFunction( MessageBuffer_t xMessageBuffer )
{
uint8_t ucRxData[ 20 ];
size_t xReceivedBytes;
const TickType_t xBlockTime = pdMS_TO_TICKS( 20 );

 // Receive the next message from the message buffer.  Wait in the Blocked
 // state (so not using any CPU processing time) for a maximum of 100ms for
 // a message to become available.
 xReceivedBytes = xMessageBufferReceive( xMessageBuffer,
                                         ( void * ) ucRxData,
                                         sizeof( ucRxData ),
                                         xBlockTime );

 if( xReceivedBytes > 0 )
 {
     // A ucRxData contains a message that is xReceivedBytes long.  Process
     // the message here....
 }
}
```

Parameters

- **xMessageBuffer** –The handle of the message buffer from which a message is being received.
- **pvRxData** –A pointer to the buffer into which the received message is to be copied.
- **xBufferLengthBytes** –The length of the buffer pointed to by the pvRxData parameter. This sets the maximum length of the message that can be received. If xBufferLengthBytes is too small to hold the next message then the message will be left in the message buffer and 0 will be returned.
- **xTicksToWait** –The maximum amount of time the task should remain in the Blocked state to wait for a message, should the message buffer be empty. xMessageBufferReceive() will return immediately if xTicksToWait is zero and the message buffer is empty. The block time is specified in tick periods, so the absolute time it represents is dependent on the tick frequency. The macro pdMS_TO_TICKS() can be used to convert a time specified in milliseconds into a time specified in ticks. Setting xTicksToWait to portMAX_DELAY will cause the task to wait indefinitely (without timing out), provided INCLUDE_vTaskSuspend is set to 1 in FreeRTOSConfig.h. Tasks do not use any CPU time when they are in the Blocked state.

Returns The length, in bytes, of the message read from the message buffer, if any. If xMessageBufferReceive() times out before a message became available then zero is returned. If the length of the message is greater than xBufferLengthBytes then the message will be left in the message buffer and zero is returned.

xMessageBufferReceiveFromISR(xMessageBuffer, pvRxData, xBufferLengthBytes, pxHigherPriorityTaskWoken)

An interrupt safe version of the API function that receives a discrete message from a message buffer. Messages can be of variable length and are copied out of the buffer.

NOTE: Uniquely among FreeRTOS objects, the stream buffer implementation (so also the message buffer implementation, as message buffers are built on top of stream buffers) assumes there is only one task or interrupt that will write to the buffer (the writer), and only one task or interrupt that will read from the buffer (the reader). It is safe for the writer and reader to be different tasks or interrupts, but, unlike other FreeRTOS objects, it is not safe to have multiple different writers or multiple different readers. If there are to be multiple different writers then the application writer must place each call to a writing API function (such as xMessageBufferSend()) inside a critical section and set the send block time to 0. Likewise, if there are to be multiple different readers then the application writer must place each call to a reading API function (such as xMessageBufferRead()) inside a critical section and set the receive block time to 0.

Use xMessageBufferReceive() to read from a message buffer from a task. Use xMessageBufferReceive-

FromISR() to read from a message buffer from an interrupt service routine (ISR).

Example use:

```
// A message buffer that has already been created.
MessageBuffer_t xMessageBuffer;

void vAnInterruptServiceRoutine( void )
{
uint8_t ucRxData[ 20 ];
size_t xReceivedBytes;
BaseType_t xHigherPriorityTaskWoken = pdFALSE;  // Initialised to pdFALSE.

 // Receive the next message from the message buffer.
 xReceivedBytes = xMessageBufferReceiveFromISR( xMessageBuffer,
                                                ( void * ) ucRxData,
                                                sizeof( ucRxData ),
                                                &xHigherPriorityTaskWoken );

 if( xReceivedBytes > 0 )
 {
     // A ucRxData contains a message that is xReceivedBytes long.  Process
     // the message here....
 }

 // If xHigherPriorityTaskWoken was set to pdTRUE inside
 // xMessageBufferReceiveFromISR() then a task that has a priority above the
 // priority of the currently executing task was unblocked and a context
 // switch should be performed to ensure the ISR returns to the unblocked
 // task.  In most FreeRTOS ports this is done by simply passing
 // xHigherPriorityTaskWoken into portYIELD_FROM_ISR(), which will test the
 // variables value, and perform the context switch if necessary.  Check the
 // documentation for the port in use for port specific instructions.
 portYIELD_FROM_ISR( xHigherPriorityTaskWoken );
}
```

Parameters

- **xMessageBuffer** –The handle of the message buffer from which a message is being received.
- **pvRxData** –A pointer to the buffer into which the received message is to be copied.
- **xBufferLengthBytes** –The length of the buffer pointed to by the pvRxData parameter. This sets the maximum length of the message that can be received. If xBufferLengthBytes is too small to hold the next message then the message will be left in the message buffer and 0 will be returned.
- **pxHigherPriorityTaskWoken** –It is possible that a message buffer will have a task blocked on it waiting for space to become available. Calling xMessageBufferReceiveFromISR() can make space available, and so cause a task that is waiting for space to leave the Blocked state. If calling xMessageBufferReceiveFromISR() causes a task to leave the Blocked state, and the unblocked task has a priority higher than the currently executing task (the task that was interrupted), then, internally, xMessageBufferReceiveFromISR() will set *pxHigherPriorityTaskWoken to pdTRUE. If xMessageBufferReceiveFromISR() sets this value to pdTRUE, then normally a context switch should be performed before the interrupt is exited. That will ensure the interrupt returns directly to the highest priority Ready state task. *pxHigherPriorityTaskWoken should be set to pdFALSE before it is passed into the function. See the code example below for an example.

Returns The length, in bytes, of the message read from the message buffer, if any.

vMessageBufferDelete(xMessageBuffer)

Deletes a message buffer that was previously created using a call to xMessageBufferCreate() or xMessage-

BufferCreateStatic(). If the message buffer was created using dynamic memory (that is, by xMessageBufferCreate()), then the allocated memory is freed.

A message buffer handle must not be used after the message buffer has been deleted.

Parameters
- **xMessageBuffer** –The handle of the message buffer to be deleted.

xMessageBufferIsFull(xMessageBuffer)

Tests to see if a message buffer is full. A message buffer is full if it cannot accept any more messages, of any size, until space is made available by a message being removed from the message buffer.

Parameters
- **xMessageBuffer** –The handle of the message buffer being queried.

Returns If the message buffer referenced by xMessageBuffer is full then pdTRUE is returned. Otherwise pdFALSE is returned.

xMessageBufferIsEmpty(xMessageBuffer)

Tests to see if a message buffer is empty (does not contain any messages).

Parameters
- **xMessageBuffer** –The handle of the message buffer being queried.

Returns If the message buffer referenced by xMessageBuffer is empty then pdTRUE is returned. Otherwise pdFALSE is returned.

xMessageBufferReset(xMessageBuffer)

Resets a message buffer to its initial empty state, discarding any message it contained.

A message buffer can only be reset if there are no tasks blocked on it.

Parameters
- **xMessageBuffer** –The handle of the message buffer being reset.

Returns If the message buffer was reset then pdPASS is returned. If the message buffer could not be reset because either there was a task blocked on the message queue to wait for space to become available, or to wait for a a message to be available, then pdFAIL is returned.

xMessageBufferSpaceAvailable(xMessageBuffer)

Returns the number of bytes of free space in the message buffer.

Parameters
- **xMessageBuffer** –The handle of the message buffer being queried.

Returns The number of bytes that can be written to the message buffer before the message buffer would be full. When a message is written to the message buffer an additional sizeof(size_t) bytes are also written to store the message' s length. sizeof(size_t) is typically 4 bytes on a 32-bit architecture, so if xMessageBufferSpacesAvailable() returns 10, then the size of the largest message that can be written to the message buffer is 6 bytes.

xMessageBufferSpacesAvailable(xMessageBuffer)

xMessageBufferNextLengthBytes(xMessageBuffer)

Returns the length (in bytes) of the next message in a message buffer. Useful if xMessageBufferReceive() returned 0 because the size of the buffer passed into xMessageBufferReceive() was too small to hold the next message.

Parameters
- **xMessageBuffer** –The handle of the message buffer being queried.

Returns The length (in bytes) of the next message in the message buffer, or 0 if the message buffer is empty.

xMessageBufferSendCompletedFromISR(xMessageBuffer, pxHigherPriorityTaskWoken)

For advanced users only.

The sbSEND_COMPLETED() macro is called from within the FreeRTOS APIs when data is sent to a message buffer or stream buffer. If there was a task that was blocked on the message or stream buffer waiting for data to

arrive then the sbSEND_COMPLETED() macro sends a notification to the task to remove it from the Blocked state. xMessageBufferSendCompletedFromISR() does the same thing. It is provided to enable application writers to implement their own version of sbSEND_COMPLETED(), and MUST NOT BE USED AT ANY OTHER TIME.

See the example implemented in FreeRTOS/Demo/Minimal/MessageBufferAMP.c for additional information.

Parameters

- **xMessageBuffer** –The handle of the stream buffer to which data was written.
- **pxHigherPriorityTaskWoken** –*pxHigherPriorityTaskWoken should be initialised to pdFALSE before it is passed into xMessageBufferSendCompletedFromISR(). If calling xMessageBufferSendCompletedFromISR() removes a task from the Blocked state, and the task has a priority above the priority of the currently running task, then *pxHigherPriorityTaskWoken will get set to pdTRUE indicating that a context switch should be performed before exiting the ISR.

Returns If a task was removed from the Blocked state then pdTRUE is returned. Otherwise pdFALSE is returned.

xMessageBufferReceiveCompletedFromISR(xMessageBuffer, pxHigherPriorityTaskWoken)

For advanced users only.

The sbRECEIVE_COMPLETED() macro is called from within the FreeRTOS APIs when data is read out of a message buffer or stream buffer. If there was a task that was blocked on the message or stream buffer waiting for data to arrive then the sbRECEIVE_COMPLETED() macro sends a notification to the task to remove it from the Blocked state. xMessageBufferReceiveCompletedFromISR() does the same thing. It is provided to enable application writers to implement their own version of sbRECEIVE_COMPLETED(), and MUST NOT BE USED AT ANY OTHER TIME.

See the example implemented in FreeRTOS/Demo/Minimal/MessageBufferAMP.c for additional information.

Parameters

- **xMessageBuffer** –The handle of the stream buffer from which data was read.
- **pxHigherPriorityTaskWoken** –*pxHigherPriorityTaskWoken should be initialised to pdFALSE before it is passed into xMessageBufferReceiveCompletedFromISR(). If calling xMessageBufferReceiveCompletedFromISR() removes a task from the Blocked state, and the task has a priority above the priority of the currently running task, then *pxHigherPriorityTaskWoken will get set to pdTRUE indicating that a context switch should be performed before exiting the ISR.

Returns If a task was removed from the Blocked state then pdTRUE is returned. Otherwise pdFALSE is returned.

Type Definitions

typedef void ***MessageBufferHandle_t**

Type by which message buffers are referenced. For example, a call to xMessageBufferCreate() returns an MessageBufferHandle_t variable that can then be used as a parameter to xMessageBufferSend(), xMessageBufferReceive(), etc.

2.7.10 FreeRTOS Additions

This document describes the additional features added to ESP-IDF FreeRTOS. This document is split into the following parts:

Contents

- *FreeRTOS Additions*
  - *Overview*
  - *Ring Buffers*

- *Hooks*
- *TLSP Deletion Callbacks*
- *Component Specific Properties*
- *API Reference*

Overview

ESP-IDF FreeRTOS is modified version of based on the Xtensa port of FreeRTOS v10.4.3 with significant modifications for SMP compatibility (see *ESP-IDF FreeRTOS SMP Changes*). However, various new features specific to ESP-IDF FreeRTOS have been added. The features are as follows:

- **Ring buffers**: Ring buffers provide a FIFO buffer that can accept entries of arbitrary lengths.
- **Hooks**: ESP-IDF FreeRTOS hooks provides support for registering extra Idle and Tick hooks at run time. Moreover, the hooks can be asymmetric among both CPUs.
- **Thread Local Storage Pointer (TLSP) Deletion Callbacks**: TLSP Deletion callbacks are run automatically when a task is deleted, thus allowing users to clean up their TLSPs automatically.
- **Component Specific Properties**: Currently added only one component specific property `ORIG_INCLUDE_PATH`.

Ring Buffers

The ESP-IDF FreeRTOS ring buffer is a strictly FIFO buffer that supports arbitrarily sized items. Ring buffers are a more memory efficient alternative to FreeRTOS queues in situations where the size of items is variable. The capacity of a ring buffer is not measured by the number of items it can store, but rather by the amount of memory used for storing items. The ring buffer provides API to send an item, or to allocate space for an item in the ring buffer to be filled manually by the user. For efficiency reasons, **items are always retrieved from the ring buffer by reference**. As a result, all retrieved items *must also be returned* to the ring buffer by using `vRingbufferReturnItem()` or `vRingbufferReturnItemFromISR()`, in order for them to be removed from the ring buffer completely. The ring buffers are split into the three following types:

No-Split buffers will guarantee that an item is stored in contiguous memory and will not attempt to split an item under any circumstances. Use No-Split buffers when items must occupy contiguous memory. *Only this buffer type allows you to get the data item address and write to the item by yourself.* Refer the documentation of the functions `xRingbufferSendAcquire()` and `xRingbufferSendComplete()` for more details.

Allow-Split buffers will allow an item to be split in two parts when wrapping around the end of the buffer if there is enough space at the tail and the head of the buffer combined to store the item. Allow-Split buffers are more memory efficient than No-Split buffers but can return an item in two parts when retrieving.

Byte buffers do not store data as separate items. All data is stored as a sequence of bytes, and any number of bytes can be sent or retrieved each time. Use byte buffers when separate items do not need to be maintained (e.g. a byte stream).

Note: No-Split buffers and Allow-Split buffers will always store items at 32-bit aligned addresses. Therefore, when retrieving an item, the item pointer is guaranteed to be 32-bit aligned. This is useful especially when you need to send some data to the DMA.

Note: Each item stored in No-Split or Allow-Split buffers will **require an additional 8 bytes for a header**. Item sizes will also be rounded up to a 32-bit aligned size (multiple of 4 bytes), however the true item size is recorded within the header. The sizes of No-Split and Allow-Split buffers will also be rounded up when created.

Usage The following example demonstrates the usage of `xRingbufferCreate()` and `xRingbufferSend()` to create a ring buffer and then send an item to it.

```
#include "freertos/ringbuf.h"
static char tx_item[] = "test_item";

...

    //Create ring buffer
    RingbufHandle_t buf_handle;
    buf_handle = xRingbufferCreate(1028, RINGBUF_TYPE_NOSPLIT);
    if (buf_handle == NULL) {
        printf("Failed to create ring buffer\n");
    }

    //Send an item
    UBaseType_t res =  xRingbufferSend(buf_handle, tx_item, sizeof(tx_item), pdMS_
↪TO_TICKS(1000));
    if (res != pdTRUE) {
        printf("Failed to send item\n");
    }
```

The following example demonstrates the usage of *xRingbufferSendAcquire()* and *xRingbufferSendComplete()* instead of *xRingbufferSend()* to acquire memory on the ring buffer (of type *RINGBUF_TYPE_NOSPLIT*) and then send an item to it. This adds one more step, but allows getting the address of the memory to write to, and writing to the memory yourself.

```
#include "freertos/ringbuf.h"
#include "soc/lldesc.h"

typedef struct {
    lldesc_t dma_desc;
    uint8_t buf[1];
} dma_item_t;

#define DMA_ITEM_SIZE(N) (sizeof(lldesc_t)+(((N)+3)&(~3)))

...

    //Retrieve space for DMA descriptor and corresponding data buffer
    //This has to be done with SendAcquire, or the address may be different when␣
↪we copy
    dma_item_t item;
    UBaseType_t res =  xRingbufferSendAcquire(buf_handle,
                       &item, DMA_ITEM_SIZE(buffer_size), pdMS_TO_TICKS(1000));
    if (res != pdTRUE) {
        printf("Failed to acquire memory for item\n");
    }
    item->dma_desc = (lldesc_t) {
        .size = buffer_size,
        .length = buffer_size,
        .eof = 0,
        .owner = 1,
        .buf = &item->buf,
    };
    //Actually send to the ring buffer for consumer to use
    res = xRingbufferSendComplete(buf_handle, &item);
    if (res != pdTRUE) {
        printf("Failed to send item\n");
    }
```

The following example demonstrates retrieving and returning an item from a **No-Split ring buffer** using *xRingbufferReceive()* and *vRingbufferReturnItem()*

```
...

    //Receive an item from no-split ring buffer
    size_t item_size;
    char *item = (char *)xRingbufferReceive(buf_handle, &item_size, pdMS_TO_
↪TICKS(1000));

    //Check received item
    if (item != NULL) {
        //Print item
        for (int i = 0; i < item_size; i++) {
            printf("%c", item[i]);
        }
        printf("\n");
        //Return Item
        vRingbufferReturnItem(buf_handle, (void *)item);
    } else {
        //Failed to receive item
        printf("Failed to receive item\n");
    }
```

The following example demonstrates retrieving and returning an item from an **Allow-Split ring buffer** using *xRingbufferReceiveSplit()* and *vRingbufferReturnItem()*

```
...

    //Receive an item from allow-split ring buffer
    size_t item_size1, item_size2;
    char *item1, *item2;
    BaseType_t ret = xRingbufferReceiveSplit(buf_handle, (void **)&item1, (void␣
↪**)&item2, &item_size1, &item_size2, pdMS_TO_TICKS(1000));

    //Check received item
    if (ret == pdTRUE && item1 != NULL) {
        for (int i = 0; i < item_size1; i++) {
            printf("%c", item1[i]);
        }
        vRingbufferReturnItem(buf_handle, (void *)item1);
        //Check if item was split
        if (item2 != NULL) {
            for (int i = 0; i < item_size2; i++) {
                printf("%c", item2[i]);
            }
            vRingbufferReturnItem(buf_handle, (void *)item2);
        }
        printf("\n");
    } else {
        //Failed to receive item
        printf("Failed to receive item\n");
    }
```

The following example demonstrates retrieving and returning an item from a **byte buffer** using *xRingbufferReceiveUpTo()* and *vRingbufferReturnItem()*

```
...

    //Receive data from byte buffer
    size_t item_size;
    char *item = (char *)xRingbufferReceiveUpTo(buf_handle, &item_size, pdMS_TO_
↪TICKS(1000), sizeof(tx_item));

    //Check received data
```

(continues on next page)

(continued from previous page)

```
    if (item != NULL) {
        //Print item
        for (int i = 0; i < item_size; i++) {
            printf("%c", item[i]);
        }
        printf("\n");
        //Return Item
        vRingbufferReturnItem(buf_handle, (void *)item);
    } else {
        //Failed to receive item
        printf("Failed to receive item\n");
    }
```

For ISR safe versions of the functions used above, call *xRingbufferSendFromISR()*, *xRingbufferReceiveFromISR()*, *xRingbufferReceiveSplitFromISR()*, *xRingbufferReceiveUpToFromISR()*, and *vRingbufferReturnItemFromISR()*

Note: Two calls to RingbufferReceive[UpTo][FromISR]() are required if the bytes wraps around the end of the ring buffer.

Sending to Ring Buffer The following diagrams illustrate the differences between No-Split and Allow-Split buffers as compared to byte buffers with regard to sending items/data. The diagrams assume that three items of sizes **18, 3, and 27 bytes** are sent respectively to a **buffer of 128 bytes**.

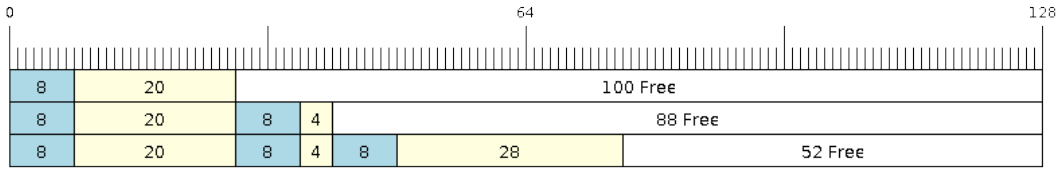

Fig. 31: Sending items to No-Split or Allow-Split ring buffers

For No-Split and Allow-Split buffers, a header of 8 bytes precedes every data item. Furthermore, the space occupied by each item is **rounded up to the nearest 32-bit aligned size** in order to maintain overall 32-bit alignment. However, the true size of the item is recorded inside the header which will be returned when the item is retrieved.

Referring to the diagram above, the 18, 3, and 27 byte items are **rounded up to 20, 4, and 28 bytes** respectively. An 8 byte header is then added in front of each item.

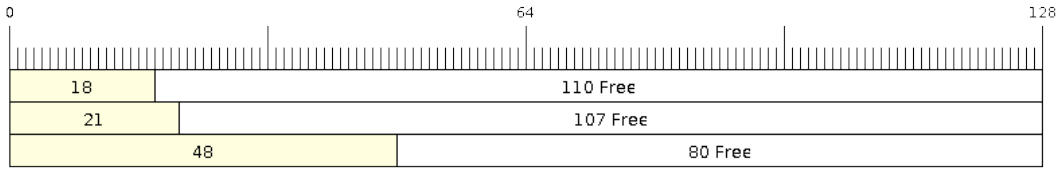

Fig. 32: Sending items to byte buffers

Byte buffers treat data as a sequence of bytes and does not incur any overhead (no headers). As a result, all data sent to a byte buffer is merged into a single item.

Referring to the diagram above, the 18, 3, and 27 byte items are sequentially written to the byte buffer and **merged into a single item of 48 bytes**.

Using SendAcquire and SendComplete Items in No-Split buffers are acquired (by `SendAcquire`) in strict FIFO order and must be sent to the buffer by `SendComplete` for the data to be accessible by the consumer. Multiple items can be sent or acquired without calling `SendComplete`, and the items do not necessarily need to be completed in the order they were acquired. However, the receiving of data items must occur in FIFO order, therefore not calling `SendComplete` for the earliest acquired item will prevent the subsequent items from being received.

The following diagrams illustrate what will happen when `SendAcquire` and `SendComplete` don't happen in the same order. At the beginning, there is already a data item of 16 bytes sent to the ring buffer. Then `SendAcquire` is called to acquire space of 20, 8, 24 bytes on the ring buffer.

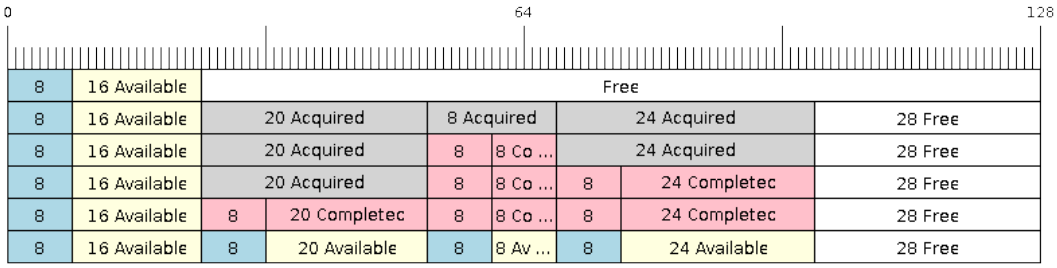

Fig. 33: SendAcquire/SendComplete items in No-Split ring buffers

After that, we fill (use) the buffers, and send them to the ring buffer by `SendComplete` in the order of 8, 24, 20. When 8 bytes and 24 bytes data are sent, the consumer still can only get the 16 bytes data item. Hence, if `SendComplete` is not called for the 20 bytes, it will not be available, nor will the data items following the 20 bytes item.

When the 20 bytes item is finally completed, all the 3 data items can be received now, in the order of 20, 8, 24 bytes, right after the 16 bytes item existing in the buffer at the beginning.

Allow-Split buffers and byte buffers do not allow using `SendAcquire` or `SendComplete` since acquired buffers are required to be complete (not wrapped).

Wrap around The following diagrams illustrate the differences between No-Split, Allow-Split, and byte buffers when a sent item requires a wrap around. The diagrams assume a buffer of **128 bytes** with **56 bytes of free space that wraps around** and a sent item of **28 bytes**.

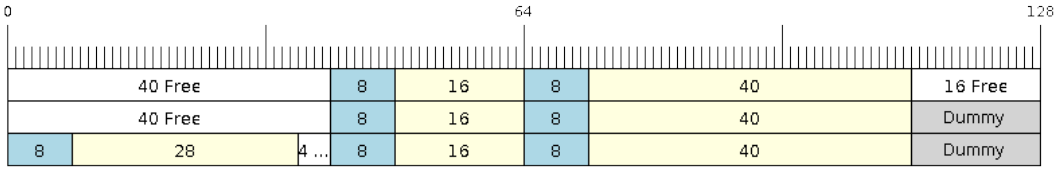

Fig. 34: Wrap around in No-Split buffers

No-Split buffers will **only store an item in continuous free space and will not split an item under any circumstances**. When the free space at the tail of the buffer is insufficient to completely store the item and its header, the free space at the tail will be **marked as dummy data**. The buffer will then wrap around and store the item in the free space at the head of the buffer.

Referring to the diagram above, the 16 bytes of free space at the tail of the buffer is insufficient to store the 28 byte item. Therefore, the 16 bytes is marked as dummy data and the item is written to the free space at the head of the buffer instead.

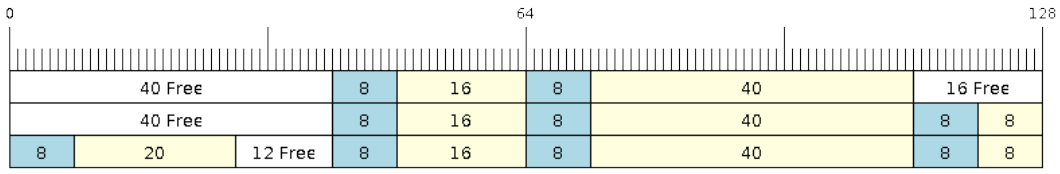

Fig. 35: Wrap around in Allow-Split buffers

Allow-Split buffers will attempt to **split the item into two parts** when the free space at the tail of the buffer is insufficient to store the item data and its header. Both parts of the split item will have their own headers (therefore incurring an extra 8 bytes of overhead).

Referring to the diagram above, the 16 bytes of free space at the tail of the buffer is insufficient to store the 28 byte item. Therefore, the item is split into two parts (8 and 20 bytes) and written as two parts to the buffer.

Note: Allow-Split buffers treat both parts of the split item as two separate items, therefore call *`xRingbufferReceiveSplit()`* instead of *`xRingbufferReceive()`* to receive both parts of a split item in a thread safe manner.

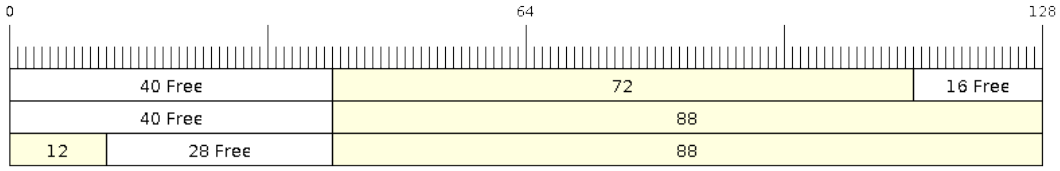

Fig. 36: Wrap around in byte buffers

Byte buffers will **store as much data as possible into the free space at the tail of buffer**. The remaining data will then be stored in the free space at the head of the buffer. No overhead is incurred when wrapping around in byte buffers.

Referring to the diagram above, the 16 bytes of free space at the tail of the buffer is insufficient to completely store the 28 bytes of data. Therefore, the 16 bytes of free space is filled with data, and the remaining 12 bytes are written to the free space at the head of the buffer. The buffer now contains data in two separate continuous parts, and each continuous part will be treated as a separate item by the byte buffer.

Retrieving/Returning The following diagrams illustrate the differences between No-Split and Allow-Split buffers as compared to byte buffers in retrieving and returning data.

Items in No-Split buffers and Allow-Split buffers are **retrieved in strict FIFO order** and **must be returned** for the occupied space to be freed. Multiple items can be retrieved before returning, and the items do not necessarily need to be returned in the order they were retrieved. However, the freeing of space must occur in FIFO order, therefore not returning the earliest retrieved item will prevent the space of subsequent items from being freed.

Referring to the diagram above, the **16, 20, and 8 byte items are retrieved in FIFO order**. However, the items are not returned in the order they were retrieved. First, the 20 byte item is returned followed by the 8 byte and the 16 byte items. The space is not freed until the first item, i.e., the 16 byte item is returned.

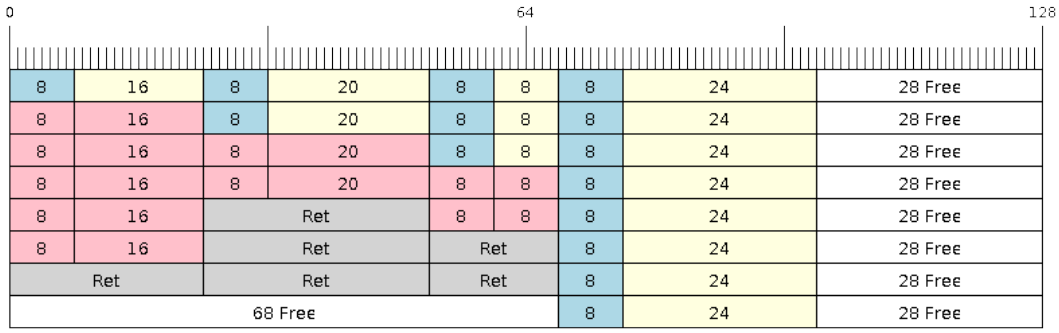

Fig. 37: Retrieving/Returning items in No-Split and Allow-Split ring buffers

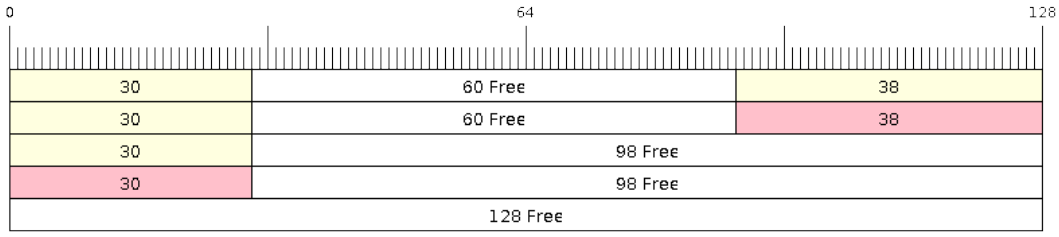

Fig. 38: Retrieving/Returning data in byte buffers

Byte buffers **do not allow multiple retrievals before returning** (every retrieval must be followed by a return before another retrieval is permitted). When using *xRingbufferReceive()* or *xRingbufferReceiveFromISR()*, all continuous stored data will be retrieved. *xRingbufferReceiveUpTo()* or *xRingbufferReceiveUpToFromISR()* can be used to restrict the maximum number of bytes retrieved. Since every retrieval must be followed by a return, the space will be freed as soon as the data is returned.

Referring to the diagram above, the 38 bytes of continuous stored data at the tail of the buffer is retrieved, returned, and freed. The next call to *xRingbufferReceive()* or *xRingbufferReceiveFromISR()* then wraps around and does the same to the 30 bytes of continuous stored data at the head of the buffer.

Ring Buffers with Queue Sets Ring buffers can be added to FreeRTOS queue sets using *xRingbufferAddToQueueSetRead()* such that every time a ring buffer receives an item or data, the queue set is notified. Once added to a queue set, every attempt to retrieve an item from a ring buffer should be preceded by a call to *xQueueSelectFromSet()*. To check whether the selected queue set member is the ring buffer, call *xRingbufferCanRead()*.

The following example demonstrates queue set usage with ring buffers.

```
#include "freertos/queue.h"
#include "freertos/ringbuf.h"

...

    //Create ring buffer and queue set
    RingbufHandle_t buf_handle = xRingbufferCreate(1028, RINGBUF_TYPE_NOSPLIT);
    QueueSetHandle_t queue_set = xQueueCreateSet(3);

    //Add ring buffer to queue set
    if (xRingbufferAddToQueueSetRead(buf_handle, queue_set) != pdTRUE) {
```

(continues on next page)

(continued from previous page)

```
        printf("Failed to add to queue set\n");
    }

...

    //Block on queue set
    xQueueSetMemberHandle member = xQueueSelectFromSet(queue_set, pdMS_TO_
↪TICKS(1000));

    //Check if member is ring buffer
    if (member != NULL && xRingbufferCanRead(buf_handle, member) == pdTRUE) {
        //Member is ring buffer, receive item from ring buffer
        size_t item_size;
        char *item = (char *)xRingbufferReceive(buf_handle, &item_size, 0);

        //Handle item
        ...

    } else {
        ...
    }
```

Ring Buffers with Static Allocation The *xRingbufferCreateStatic()* can be used to create ring buffers with specific memory requirements (such as a ring buffer being allocated in external RAM). All blocks of memory used by a ring buffer must be manually allocated beforehand then passed to the *xRingbufferCreateStatic()* to be initialized as a ring buffer. These blocks include the following:

- The ring buffer's data structure of type *StaticRingbuffer_t*
- The ring buffer's storage area of size `xBufferSize`. Note that `xBufferSize` must be 32-bit aligned for No-Split and Allow-Split buffers.

The manner in which these blocks are allocated will depend on the users requirements (e.g. all blocks being statically declared, or dynamically allocated with specific capabilities such as external RAM).

Note: When deleting a ring buffer created via *xRingbufferCreateStatic()*, the function *vRingbufferDelete()* will not free any of the memory blocks. This must be done manually by the user after *vRingbufferDelete()* is called.

The code snippet below demonstrates a ring buffer being allocated entirely in external RAM.

```
#include "freertos/ringbuf.h"
#include "freertos/semphr.h"
#include "esp_heap_caps.h"

#define BUFFER_SIZE     400     //32-bit aligned size
#define BUFFER_TYPE     RINGBUF_TYPE_NOSPLIT
...

//Allocate ring buffer data structure and storage area into external RAM
StaticRingbuffer_t *buffer_struct = (StaticRingbuffer_t *)heap_caps_
↪malloc(sizeof(StaticRingbuffer_t), MALLOC_CAP_SPIRAM);
uint8_t *buffer_storage = (uint8_t *)heap_caps_malloc(sizeof(uint8_t)*BUFFER_SIZE,␣
↪MALLOC_CAP_SPIRAM);

//Create a ring buffer with manually allocated memory
RingbufHandle_t handle = xRingbufferCreateStatic(BUFFER_SIZE, BUFFER_TYPE, buffer_
↪storage, buffer_struct);
```

(continues on next page)

(continued from previous page)

```
...

//Delete the ring buffer after used
vRingbufferDelete(handle);

//Manually free all blocks of memory
free(buffer_struct);
free(buffer_storage);
```

Priority Inversion Ideally, ring buffers can be used with multiple tasks in an SMP fashion where the **highest priority task will always be serviced first.** However due to the usage of binary semaphores in the ring buffer's underlying implementation, priority inversion may occur under very specific circumstances.

The ring buffer governs sending by a binary semaphore which is given whenever space is freed on the ring buffer. The highest priority task waiting to send will repeatedly take the semaphore until sufficient free space becomes available or until it times out. Ideally this should prevent any lower priority tasks from being serviced as the semaphore should always be given to the highest priority task.

However, in between iterations of acquiring the semaphore, there is a **gap in the critical section** which may permit another task (on the other core or with an even higher priority) to free some space on the ring buffer and as a result give the semaphore. Therefore, the semaphore will be given before the highest priority task can re-acquire the semaphore. This will result in the **semaphore being acquired by the second-highest priority task** waiting to send, hence causing priority inversion.

This side effect will not affect ring buffer performance drastically given if the number of tasks using the ring buffer simultaneously is low, and the ring buffer is not operating near maximum capacity.

Hooks

FreeRTOS consists of Idle Hooks and Tick Hooks which allow for application specific functionality to be added to the Idle Task and Tick Interrupt. ESP-IDF provides its own Idle and Tick Hook API in addition to the hooks provided by vanilla FreeRTOS. ESP-IDF hooks have the added benefit of being run time configurable and asymmetrical.

Vanilla FreeRTOS Hooks Idle and Tick Hooks in vanilla FreeRTOS are implemented by the user defining the functions `vApplicationIdleHook()` and `vApplicationTickHook()` respectively somewhere in the application. Vanilla FreeRTOS will run the user defined Idle Hook and Tick Hook on every iteration of the Idle Task and Tick Interrupt respectively.

Vanilla FreeRTOS hooks are referred to as **Legacy Hooks** in ESP-IDF FreeRTOS. To enable legacy hooks, *CONFIG_FREERTOS_LEGACY_HOOKS* should be enabled in *project configuration menu*.

Due to vanilla FreeRTOS being designed for single core, `vApplicationIdleHook()` and `vApplicationTickHook()` can only be defined once. However, the ESP32 is dual-core in nature, therefore same Idle Hook and Tick Hook are used for both cores (in other words, the hooks are symmetrical for both cores).

ESP-IDF Idle and Tick Hooks For some use-cases it may be necessary for the Idle Tasks or Tick Interrupts to execute multiple hooks that are configurable at run time.

Furthermore, due to the dual-core nature of the ESP32, it may be necessary for some applications to have separate hooks for each core.

Therefore, ESP-IDF provides its own hooks API in addition to the legacy hooks provided by vanilla FreeRTOS.

The ESP-IDF tick and idle hooks are registered at run time. Each tick hook and idle hook must be registered to a specific CPU. When the idle task runs or a tick interrupt occurs on a particular CPU, the CPU will run each of its registered idle hook and tick hook in turn.

Note: Tick interrupt stays active whilst cache is disabled and hence `vApplicationTickHook()` (legacy case) or ESP-IDF tick hooks must be placed in internal RAM. Please refer to the *SPI flash API documentation* for more details.

TLSP Deletion Callbacks

Vanilla FreeRTOS provides a Thread Local Storage Pointers (TLSP) feature. These are pointers stored directly in the Task Control Block (TCB) of a particular task. TLSPs allow each task to have its own unique set of pointers to data structures. Vanilla FreeRTOS expects users to…

- set a task's TLSPs by calling `vTaskSetThreadLocalStoragePointer()` after the task has been created.
- get a task's TLSPs by calling `pvTaskGetThreadLocalStoragePointer()` during the task's lifetime.
- free the memory pointed to by the TLSPs before the task is deleted.

However, there can be instances where users may want the freeing of TLSP memory to be automatic. Therefore, ESP-IDF FreeRTOS provides the additional feature of TLSP deletion callbacks. These user provided deletion callbacks are called automatically when a task is deleted, thus allows the TLSP memory to be cleaned up without needing to add the cleanup logic explicitly to the code of every task.

The TLSP deletion callbacks are set in a similar fashion to the TLSPs themselves.

- `vTaskSetThreadLocalStoragePointerAndDelCallback()` sets both a particular TLSP and its associated callback.
- Calling the Vanilla FreeRTOS function `vTaskSetThreadLocalStoragePointer()` will simply set the TLSP's associated Deletion Callback to *NULL* meaning that no callback will be called for that TLSP during task deletion.

When implementing TLSP callbacks, users should note the following:

- The callback **must never attempt to block or yield** and critical sections should be kept as short as possible
- The callback is called shortly before a deleted task's memory is freed. Thus, the callback can either be called from `vTaskDelete()` itself, or from the idle task.

Component Specific Properties

Besides standard component variables that are available with basic cmake build properties, FreeRTOS component also provides arguments (only one so far) for simpler integration with other modules:

- *ORIG_INCLUDE_PATH* - contains an absolute path to freertos root include folder. Thus instead of *#include "freertos/FreeRTOS.h"* you can refer to headers directly: *#include "FreeRTOS.h"*.

API Reference

Ring Buffer API

Header File

- components/esp_ringbuf/include/freertos/ringbuf.h

Functions

RingbufHandle_t **xRingbufferCreate**(size_t xBufferSize, *RingbufferType_t* xBufferType)

Create a ring buffer.

Note: xBufferSize of no-split/allow-split buffers will be rounded up to the nearest 32-bit aligned size.

Parameters

- **xBufferSize** –**[in]** Size of the buffer in bytes. Note that items require space for overhead in no-split/allow-split buffers
- **xBufferType** –**[in]** Type of ring buffer, see documentation.

Returns A handle to the created ring buffer, or NULL in case of error.

RingbufHandle_t **xRingbufferCreateNoSplit**(size_t xItemSize, size_t xItemNum)

Create a ring buffer of type RINGBUF_TYPE_NOSPLIT for a fixed item_size.

This API is similar to xRingbufferCreate(), but it will internally allocate additional space for the headers.

Parameters

- **xItemSize** –**[in]** Size of each item to be put into the ring buffer
- **xItemNum** –**[in]** Maximum number of items the buffer needs to hold simultaneously

Returns A RingbufHandle_t handle to the created ring buffer, or NULL in case of error.

RingbufHandle_t **xRingbufferCreateStatic**(size_t xBufferSize, *RingbufferType_t* xBufferType, uint8_t *pucRingbufferStorage, *StaticRingbuffer_t* *pxStaticRingbuffer)

Create a ring buffer but manually provide the required memory.

Note: xBufferSize of no-split/allow-split buffers MUST be 32-bit aligned.

Parameters

- **xBufferSize** –**[in]** Size of the buffer in bytes.
- **xBufferType** –**[in]** Type of ring buffer, see documentation
- **pucRingbufferStorage** –**[in]** Pointer to the ring buffer's storage area. Storage area must of the same size as specified by xBufferSize
- **pxStaticRingbuffer** –**[in]** Pointed to a struct of type StaticRingbuffer_t which will be used to hold the ring buffer's data structure

Returns A handle to the created ring buffer

BaseType_t **xRingbufferSend**(*RingbufHandle_t* xRingbuffer, const void *pvItem, size_t xItemSize, TickType_t xTicksToWait)

Insert an item into the ring buffer.

Attempt to insert an item into the ring buffer. This function will block until enough free space is available or until it times out.

Note: For no-split/allow-split ring buffers, the actual size of memory that the item will occupy will be rounded up to the nearest 32-bit aligned size. This is done to ensure all items are always stored in 32-bit aligned fashion.

Parameters

- **xRingbuffer** –**[in]** Ring buffer to insert the item into
- **pvItem** –**[in]** Pointer to data to insert. NULL is allowed if xItemSize is 0.
- **xItemSize** –**[in]** Size of data to insert.
- **xTicksToWait** –**[in]** Ticks to wait for room in the ring buffer.

Returns

- pdTRUE if succeeded

- pdFALSE on time-out or when the data is larger than the maximum permissible size of the buffer

BaseType_t **xRingbufferSendFromISR**(*RingbufHandle_t* xRingbuffer, const void *pvItem, size_t xItemSize, BaseType_t *pxHigherPriorityTaskWoken)

Insert an item into the ring buffer in an ISR.

Attempt to insert an item into the ring buffer from an ISR. This function will return immediately if there is insufficient free space in the buffer.

Note: For no-split/allow-split ring buffers, the actual size of memory that the item will occupy will be rounded up to the nearest 32-bit aligned size. This is done to ensure all items are always stored in 32-bit aligned fashion.

Parameters

- **xRingbuffer** –**[in]** Ring buffer to insert the item into
- **pvItem** –**[in]** Pointer to data to insert. NULL is allowed if xItemSize is 0.
- **xItemSize** –**[in]** Size of data to insert.
- **pxHigherPriorityTaskWoken** –**[out]** Value pointed to will be set to pdTRUE if the function woke up a higher priority task.

Returns

- pdTRUE if succeeded
- pdFALSE when the ring buffer does not have space.

BaseType_t **xRingbufferSendAcquire**(*RingbufHandle_t* xRingbuffer, void **ppvItem, size_t xItemSize, TickType_t xTicksToWait)

Acquire memory from the ring buffer to be written to by an external source and to be sent later.

Attempt to allocate buffer for an item to be sent into the ring buffer. This function will block until enough free space is available or until it timesout.

The item, as well as the following items `SendAcquire` or `Send` after it, will not be able to be read from the ring buffer until this item is actually sent into the ring buffer.

Note: Only applicable for no-split ring buffers now, the actual size of memory that the item will occupy will be rounded up to the nearest 32-bit aligned size. This is done to ensure all items are always stored in 32-bit aligned fashion.

Parameters

- **xRingbuffer** –**[in]** Ring buffer to allocate the memory
- **ppvItem** –**[out]** Double pointer to memory acquired (set to NULL if no memory were retrieved)
- **xItemSize** –**[in]** Size of item to acquire.
- **xTicksToWait** –**[in]** Ticks to wait for room in the ring buffer.

Returns

- pdTRUE if succeeded
- pdFALSE on time-out or when the data is larger than the maximum permissible size of the buffer

BaseType_t **xRingbufferSendComplete**(*RingbufHandle_t* xRingbuffer, void *pvItem)

Actually send an item into the ring buffer allocated before by `xRingbufferSendAcquire`.

Note: Only applicable for no-split ring buffers. Only call for items allocated by `xRingbufferSendAcquire`.

Parameters

- **xRingbuffer** –**[in]** Ring buffer to insert the item into
- **pvItem** –**[in]** Pointer to item in allocated memory to insert.

Returns

- pdTRUE if succeeded
- pdFALSE if fail for some reason.

void ***xRingbufferReceive**(*RingbufHandle_t* xRingbuffer, size_t *pxItemSize, TickType_t xTicksToWait)

Retrieve an item from the ring buffer.

Attempt to retrieve an item from the ring buffer. This function will block until an item is available or until it times out.

Note: A call to vRingbufferReturnItem() is required after this to free the item retrieved.

Parameters

- **xRingbuffer** –**[in]** Ring buffer to retrieve the item from
- **pxItemSize** –**[out]** Pointer to a variable to which the size of the retrieved item will be written.
- **xTicksToWait** –**[in]** Ticks to wait for items in the ring buffer.

Returns

- Pointer to the retrieved item on success; *pxItemSize filled with the length of the item.
- NULL on timeout, *pxItemSize is untouched in that case.

void ***xRingbufferReceiveFromISR**(*RingbufHandle_t* xRingbuffer, size_t *pxItemSize)

Retrieve an item from the ring buffer in an ISR.

Attempt to retrieve an item from the ring buffer. This function returns immediately if there are no items available for retrieval

Note: A call to vRingbufferReturnItemFromISR() is required after this to free the item retrieved.

Note: Byte buffers do not allow multiple retrievals before returning an item

Note: Two calls to RingbufferReceiveFromISR() are required if the bytes wrap around the end of the ring buffer.

Parameters

- **xRingbuffer** –**[in]** Ring buffer to retrieve the item from
- **pxItemSize** –**[out]** Pointer to a variable to which the size of the retrieved item will be written.

Returns

- Pointer to the retrieved item on success; *pxItemSize filled with the length of the item.
- NULL when the ring buffer is empty, *pxItemSize is untouched in that case.

BaseType_t **xRingbufferReceiveSplit**(*RingbufHandle_t* xRingbuffer, void **ppvHeadItem, void **ppvTailItem, size_t *pxHeadItemSize, size_t *pxTailItemSize, TickType_t xTicksToWait)

Retrieve a split item from an allow-split ring buffer.

Attempt to retrieve a split item from an allow-split ring buffer. If the item is not split, only a single item is retried. If the item is split, both parts will be retrieved. This function will block until an item is available or until it times out.

Note: Call(s) to vRingbufferReturnItem() is required after this to free up the item(s) retrieved.

Note: This function should only be called on allow-split buffers

Parameters

- **xRingbuffer** –**[in]** Ring buffer to retrieve the item from
- **ppvHeadItem** –**[out]** Double pointer to first part (set to NULL if no items were retrieved)
- **ppvTailItem** –**[out]** Double pointer to second part (set to NULL if item is not split)
- **pxHeadItemSize** –**[out]** Pointer to size of first part (unmodified if no items were retrieved)
- **pxTailItemSize** –**[out]** Pointer to size of second part (unmodified if item is not split)
- **xTicksToWait** –**[in]** Ticks to wait for items in the ring buffer.

Returns

- pdTRUE if an item (split or unsplit) was retrieved
- pdFALSE when no item was retrieved

BaseType_t **xRingbufferReceiveSplitFromISR**(*RingbufHandle_t* xRingbuffer, void **ppvHeadItem, void **ppvTailItem, size_t *pxHeadItemSize, size_t *pxTailItemSize)

Retrieve a split item from an allow-split ring buffer in an ISR.

Attempt to retrieve a split item from an allow-split ring buffer. If the item is not split, only a single item is retried. If the item is split, both parts will be retrieved. This function returns immediately if there are no items available for retrieval

Note: Calls to vRingbufferReturnItemFromISR() is required after this to free up the item(s) retrieved.

Note: This function should only be called on allow-split buffers

Parameters

- **xRingbuffer** –**[in]** Ring buffer to retrieve the item from
- **ppvHeadItem** –**[out]** Double pointer to first part (set to NULL if no items were retrieved)
- **ppvTailItem** –**[out]** Double pointer to second part (set to NULL if item is not split)
- **pxHeadItemSize** –**[out]** Pointer to size of first part (unmodified if no items were retrieved)
- **pxTailItemSize** –**[out]** Pointer to size of second part (unmodified if item is not split)

Returns

- pdTRUE if an item (split or unsplit) was retrieved
- pdFALSE when no item was retrieved

void ***xRingbufferReceiveUpTo**(*RingbufHandle_t* xRingbuffer, size_t *pxItemSize, TickType_t xTicksToWait, size_t xMaxSize)

Retrieve bytes from a byte buffer, specifying the maximum amount of bytes to retrieve.

Attempt to retrieve data from a byte buffer whilst specifying a maximum number of bytes to retrieve. This function will block until there is data available for retrieval or until it times out.

Note: A call to vRingbufferReturnItem() is required after this to free up the data retrieved.

Note: This function should only be called on byte buffers

Note: Byte buffers do not allow multiple retrievals before returning an item

Note: Two calls to RingbufferReceiveUpTo() are required if the bytes wrap around the end of the ring buffer.

Parameters

- **`xRingbuffer`** –**[in]** Ring buffer to retrieve the item from
- **`pxItemSize`** –**[out]** Pointer to a variable to which the size of the retrieved item will be written.
- **`xTicksToWait`** –**[in]** Ticks to wait for items in the ring buffer.
- **`xMaxSize`** –**[in]** Maximum number of bytes to return.

Returns

- Pointer to the retrieved item on success; *pxItemSize filled with the length of the item.
- NULL on timeout, *pxItemSize is untouched in that case.

void ***`xRingbufferReceiveUpToFromISR`**(*RingbufHandle_t* xRingbuffer, size_t *pxItemSize, size_t xMaxSize)

Retrieve bytes from a byte buffer, specifying the maximum amount of bytes to retrieve. Call this from an ISR.

Attempt to retrieve bytes from a byte buffer whilst specifying a maximum number of bytes to retrieve. This function will return immediately if there is no data available for retrieval.

Note: A call to vRingbufferReturnItemFromISR() is required after this to free up the data received.

Note: This function should only be called on byte buffers

Note: Byte buffers do not allow multiple retrievals before returning an item

Parameters

- **`xRingbuffer`** –**[in]** Ring buffer to retrieve the item from
- **`pxItemSize`** –**[out]** Pointer to a variable to which the size of the retrieved item will be written.
- **`xMaxSize`** –**[in]** Maximum number of bytes to return.

Returns

- Pointer to the retrieved item on success; *pxItemSize filled with the length of the item.
- NULL when the ring buffer is empty, *pxItemSize is untouched in that case.

void **`vRingbufferReturnItem`**(*RingbufHandle_t* xRingbuffer, void *pvItem)

Return a previously-retrieved item to the ring buffer.

Note: If a split item is retrieved, both parts should be returned by calling this function twice

Parameters

- **`xRingbuffer`** –**[in]** Ring buffer the item was retrieved from
- **`pvItem`** –**[in]** Item that was received earlier

void **vRingbufferReturnItemFromISR**(*RingbufHandle_t* xRingbuffer, void *pvItem, BaseType_t *pxHigherPriorityTaskWoken)

Return a previously-retrieved item to the ring buffer from an ISR.

Note: If a split item is retrieved, both parts should be returned by calling this function twice

Parameters

- **xRingbuffer** –**[in]** Ring buffer the item was retrieved from
- **pvItem** –**[in]** Item that was received earlier
- **pxHigherPriorityTaskWoken** –**[out]** Value pointed to will be set to pdTRUE if the function woke up a higher priority task.

void **vRingbufferDelete**(*RingbufHandle_t* xRingbuffer)

Delete a ring buffer.

Note: This function will not deallocate any memory if the ring buffer was created using xRingbufferCreateStatic(). Deallocation must be done manually be the user.

Parameters **xRingbuffer** –**[in]** Ring buffer to delete

size_t **xRingbufferGetMaxItemSize**(*RingbufHandle_t* xRingbuffer)

Get maximum size of an item that can be placed in the ring buffer.

This function returns the maximum size an item can have if it was placed in an empty ring buffer.

Note: The max item size for a no-split buffer is limited to ((buffer_size/2)-header_size). This limit is imposed so that an item of max item size can always be sent to the an empty no-split buffer regardless of the internal positions of the buffer's read/write/free pointers.

Parameters **xRingbuffer** –**[in]** Ring buffer to query
Returns Maximum size, in bytes, of an item that can be placed in a ring buffer.

size_t **xRingbufferGetCurFreeSize**(*RingbufHandle_t* xRingbuffer)

Get current free size available for an item/data in the buffer.

This gives the real time free space available for an item/data in the ring buffer. This represents the maximum size an item/data can have if it was currently sent to the ring buffer.

Note: An empty no-split buffer has a max current free size for an item that is limited to ((buffer_size/2)-header_size). See API reference for xRingbufferGetMaxItemSize().

Warning: This API is not thread safe. So, if multiple threads are accessing the same ring buffer, it is the application's responsibility to ensure atomic access to this API and the subsequent Send

Parameters **xRingbuffer** –**[in]** Ring buffer to query
Returns Current free size, in bytes, available for an entry

BaseType_t **xRingbufferAddToQueueSetRead**(*RingbufHandle_t* xRingbuffer, *QueueSetHandle_t* xQueueSet)

Add the ring buffer's read semaphore to a queue set.

The ring buffer's read semaphore indicates that data has been written to the ring buffer. This function adds the ring buffer's read semaphore to a queue set.

Parameters
- **xRingbuffer** –**[in]** Ring buffer to add to the queue set
- **xQueueSet** –**[in]** Queue set to add the ring buffer's read semaphore to

Returns
- pdTRUE on success, pdFALSE otherwise

BaseType_t **xRingbufferCanRead**(*RingbufHandle_t* xRingbuffer, *QueueSetMemberHandle_t* xMember)

Check if the selected queue set member is the ring buffer's read semaphore.

This API checks if queue set member returned from xQueueSelectFromSet() is the read semaphore of this ring buffer. If so, this indicates the ring buffer has items waiting to be retrieved.

Parameters
- **xRingbuffer** –**[in]** Ring buffer which should be checked
- **xMember** –**[in]** Member returned from xQueueSelectFromSet

Returns
- pdTRUE when semaphore belongs to ring buffer
- pdFALSE otherwise.

BaseType_t **xRingbufferRemoveFromQueueSetRead**(*RingbufHandle_t* xRingbuffer, *QueueSetHandle_t* xQueueSet)

Remove the ring buffer's read semaphore from a queue set.

This specifically removes a ring buffer's read semaphore from a queue set. The read semaphore is used to indicate when data has been written to the ring buffer

Parameters
- **xRingbuffer** –**[in]** Ring buffer to remove from the queue set
- **xQueueSet** –**[in]** Queue set to remove the ring buffer's read semaphore from

Returns
- pdTRUE on success
- pdFALSE otherwise

void **vRingbufferGetInfo**(*RingbufHandle_t* xRingbuffer, UBaseType_t *uxFree, UBaseType_t *uxRead, UBaseType_t *uxWrite, UBaseType_t *uxAcquire, UBaseType_t *uxItemsWaiting)

Get information about ring buffer status.

Get information of the a ring buffer's current status such as free/read/write pointer positions, and number of items waiting to be retrieved. Arguments can be set to NULL if they are not required.

Parameters
- **xRingbuffer** –**[in]** Ring buffer to remove from the queue set
- **uxFree** –**[out]** Pointer use to store free pointer position
- **uxRead** –**[out]** Pointer use to store read pointer position
- **uxWrite** –**[out]** Pointer use to store write pointer position
- **uxAcquire** –**[out]** Pointer use to store acquire pointer position
- **uxItemsWaiting** –**[out]** Pointer use to store number of items (bytes for byte buffer) waiting to be retrieved

void **xRingbufferPrintInfo**(*RingbufHandle_t* xRingbuffer)

Debugging function to print the internal pointers in the ring buffer.

Parameters **xRingbuffer** –Ring buffer to show

Structures

struct **xSTATIC_RINGBUFFER**

Struct that is equivalent in size to the ring buffer's data structure.

The contents of this struct are not meant to be used directly. This structure is meant to be used when creating a statically allocated ring buffer where this struct is of the exact size required to store a ring buffer's control data structure.

Type Definitions

typedef void ***RingbufHandle_t**

Type by which ring buffers are referenced. For example, a call to xRingbufferCreate() returns a RingbufHandle_t variable that can then be used as a parameter to xRingbufferSend(), xRingbufferReceive(), etc.

typedef struct *xSTATIC_RINGBUFFER* **StaticRingbuffer_t**

Struct that is equivalent in size to the ring buffer's data structure.

The contents of this struct are not meant to be used directly. This structure is meant to be used when creating a statically allocated ring buffer where this struct is of the exact size required to store a ring buffer's control data structure.

Enumerations

enum **RingbufferType_t**

Values:

enumerator **RINGBUF_TYPE_NOSPLIT**

No-split buffers will only store an item in contiguous memory and will never split an item. Each item requires an 8 byte overhead for a header and will always internally occupy a 32-bit aligned size of space.

enumerator **RINGBUF_TYPE_ALLOWSPLIT**

Allow-split buffers will split an item into two parts if necessary in order to store it. Each item requires an 8 byte overhead for a header, splitting incurs an extra header. Each item will always internally occupy a 32-bit aligned size of space.

enumerator **RINGBUF_TYPE_BYTEBUF**

Byte buffers store data as a sequence of bytes and do not maintain separate items, therefore byte buffers have no overhead. All data is stored as a sequence of byte and any number of bytes can be sent or retrieved each time.

enumerator **RINGBUF_TYPE_MAX**

Hooks API

Header File

- components/esp_system/include/esp_freertos_hooks.h

Functions

esp_err_t **esp_register_freertos_idle_hook_for_cpu**(*esp_freertos_idle_cb_t* new_idle_cb, UBaseType_t cpuid)

Register a callback to be called from the specified core's idle hook. The callback should return true if it should be called by the idle hook once per interrupt (or FreeRTOS tick), and return false if it should be called repeatedly as fast as possible by the idle hook.

Warning: Idle callbacks MUST NOT, UNDER ANY CIRCUMSTANCES, CALL A FUNCTION THAT MIGHT BLOCK.

Parameters
- **new_idle_cb** –**[in]** Callback to be called
- **cpuid** –**[in]** id of the core

Returns
- ESP_OK: Callback registered to the specified core's idle hook
- ESP_ERR_NO_MEM: No more space on the specified core's idle hook to register callback
- ESP_ERR_INVALID_ARG: cpuid is invalid

esp_err_t **esp_register_freertos_idle_hook** (*esp_freertos_idle_cb_t* new_idle_cb)

Register a callback to the idle hook of the core that calls this function. The callback should return true if it should be called by the idle hook once per interrupt (or FreeRTOS tick), and return false if it should be called repeatedly as fast as possible by the idle hook.

Warning: Idle callbacks MUST NOT, UNDER ANY CIRCUMSTANCES, CALL A FUNCTION THAT MIGHT BLOCK.

Parameters **new_idle_cb** –**[in]** Callback to be called

Returns
- ESP_OK: Callback registered to the calling core's idle hook
- ESP_ERR_NO_MEM: No more space on the calling core's idle hook to register callback

esp_err_t **esp_register_freertos_tick_hook_for_cpu** (*esp_freertos_tick_cb_t* new_tick_cb, UBaseType_t cpuid)

Register a callback to be called from the specified core's tick hook.

Parameters
- **new_tick_cb** –**[in]** Callback to be called
- **cpuid** –**[in]** id of the core

Returns
- ESP_OK: Callback registered to specified core's tick hook
- ESP_ERR_NO_MEM: No more space on the specified core's tick hook to register the callback
- ESP_ERR_INVALID_ARG: cpuid is invalid

esp_err_t **esp_register_freertos_tick_hook** (*esp_freertos_tick_cb_t* new_tick_cb)

Register a callback to be called from the calling core's tick hook.

Parameters **new_tick_cb** –**[in]** Callback to be called

Returns
- ESP_OK: Callback registered to the calling core's tick hook
- ESP_ERR_NO_MEM: No more space on the calling core's tick hook to register the callback

void **esp_deregister_freertos_idle_hook_for_cpu** (*esp_freertos_idle_cb_t* old_idle_cb, UBaseType_t cpuid)

Unregister an idle callback from the idle hook of the specified core.

Parameters
- **old_idle_cb** –**[in]** Callback to be unregistered
- **cpuid** –**[in]** id of the core

void **esp_deregister_freertos_idle_hook** (*esp_freertos_idle_cb_t* old_idle_cb)

Unregister an idle callback. If the idle callback is registered to the idle hooks of both cores, the idle hook will be unregistered from both cores.

Parameters **old_idle_cb** –**[in]** Callback to be unregistered

void **esp_deregister_freertos_tick_hook_for_cpu**(*esp_freertos_tick_cb_t* old_tick_cb, UBaseType_t cpuid)

Unregister a tick callback from the tick hook of the specified core.

Parameters

- **old_tick_cb** –**[in]** Callback to be unregistered
- **cpuid** –**[in]** id of the core

void **esp_deregister_freertos_tick_hook**(*esp_freertos_tick_cb_t* old_tick_cb)

Unregister a tick callback. If the tick callback is registered to the tick hooks of both cores, the tick hook will be unregistered from both cores.

Parameters **old_tick_cb** –**[in]** Callback to be unregistered

Type Definitions

typedef bool (***esp_freertos_idle_cb_t**)(void)

typedef void (***esp_freertos_tick_cb_t**)(void)

2.7.11 Heap Memory Allocation

Stack and Heap

ESP-IDF applications use the common computer architecture patterns of *stack* (dynamic memory allocated by program control flow) and *heap* (dynamic memory allocated by function calls), as well as statically allocated memory (allocated at compile time).

Because ESP-IDF is a multi-threaded RTOS environment, each RTOS task has its own stack. By default, each of these stacks is allocated from the heap when the task is created. (See `xTaskCreateStatic()` for the alternative where stacks are statically allocated.)

Because ESP32 uses multiple types of RAM, it also contains multiple heaps with different capabilities. A capabilities-based memory allocator allows apps to make heap allocations for different purposes.

For most purposes, the standard libc `malloc()` and `free()` functions can be used for heap allocation without any special consideration.

However, in order to fully make use of all of the memory types and their characteristics, ESP-IDF also has a capabilities-based heap memory allocator. If you want to have memory with certain properties (for example, *DMA-Capable Memory* or executable-memory), you can create an OR-mask of the required capabilities and pass that to `heap_caps_malloc()`.

Memory Capabilities

The ESP32 contains multiple types of RAM:

- DRAM (Data RAM) is memory used to hold data. This is the most common kind of memory accessed as heap.
- IRAM (Instruction RAM) usually holds executable data only. If accessed as generic memory, all accesses must be *32-bit aligned*.
- D/IRAM is RAM which can be used as either Instruction or Data RAM.

For more details on these internal memory types, see *Memory Types*.

It's also possible to connect external SPI RAM to the ESP32 - *external RAM* can be integrated into the ESP32's memory map using the flash cache, and accessed similarly to DRAM.

DRAM uses capability `MALLOC_CAP_8BIT` (accessible in single byte reads and writes). To test the free DRAM heap size at runtime, call cpp:func:*heap_caps_get_free_size(MALLOC_CAP_8BIT)*.

When calling `malloc()`, the ESP-IDF `malloc()` implementation internally calls cpp:func:*heap_caps_malloc_default(size)*. This will allocate memory with capability `MALLOC_CAP_DEFAULT`, which is byte-addressable.

Because malloc uses the capabilities-based allocation system, memory allocated using *`heap_caps_malloc()`* can be freed by calling the standard `free()` function.

Available Heap

DRAM At startup, the DRAM heap contains all data memory which is not statically allocated by the app. Reducing statically allocated buffers will increase the amount of available free heap.

To find the amount of statically allocated memory, use the *idf.py size* command.

Note: Due to a technical limitation, the maximum statically allocated DRAM usage is 160KB. The remaining 160KB (for a total of 320KB of DRAM) can only be allocated at runtime as heap.

Note: At runtime, the available heap DRAM may be less than calculated at compile time, because at startup some memory is allocated from the heap before the FreeRTOS scheduler is started (including memory for the stacks of initial FreeRTOS tasks).

IRAM At startup, the IRAM heap contains all instruction memory which is not used by the app executable code.

The *idf.py size* command can be used to find the amount of IRAM used by the app.

D/IRAM Some memory in the ESP32 is available as either DRAM or IRAM. If memory is allocated from a D/IRAM region, the free heap size for both types of memory will decrease.

Heap Sizes At startup, all ESP-IDF apps log a summary of all heap addresses (and sizes) at level Info:

```
I (252) heap_init: Initializing. RAM available for dynamic allocation:
I (259) heap_init: At 3FFAE6E0 len 00001920 (6 KiB): DRAM
I (265) heap_init: At 3FFB2EC8 len 0002D138 (180 KiB): DRAM
I (272) heap_init: At 3FFE0440 len 00003AE0 (14 KiB): D/IRAM
I (278) heap_init: At 3FFE4350 len 0001BCB0 (111 KiB): D/IRAM
I (284) heap_init: At 4008944C len 00016BB4 (90 KiB): IRAM
```

Finding available heap See *Heap Information*.

Special Capabilities

DMA-Capable Memory Use the `MALLOC_CAP_DMA` flag to allocate memory which is suitable for use with hardware DMA engines (for example SPI and I2S). This capability flag excludes any external PSRAM.

32-Bit Accessible Memory If a certain memory structure is only addressed in 32-bit units, for example an array of ints or pointers, it can be useful to allocate it with the `MALLOC_CAP_32BIT` flag. This also allows the allocator to give out IRAM memory; something which it can't do for a normal malloc() call. This can help to use all the available memory in the ESP32.

Memory allocated with `MALLOC_CAP_32BIT` can *only* be accessed via 32-bit reads and writes, any other type of access will generate a fatal LoadStoreError exception.

External SPI Memory When *external RAM* is enabled, external SPI RAM under 4MiB in size can be allocated using standard `malloc` calls, or via `heap_caps_malloc(MALLOC_CAP_SPIRAM)`, depending on configuration. See *Configuring External RAM* for more details.

To use the region above the 4MiB limit, you can use the *himem API*.

Thread Safety

Heap functions are thread safe, meaning they can be called from different tasks simultaneously without any limitations.

It is technically possible to call `malloc`, `free`, and related functions from interrupt handler (ISR) context. However this is not recommended, as heap function calls may delay other interrupts. It is strongly recommended to refactor applications so that any buffers used by an ISR are pre-allocated outside of the ISR. Support for calling heap functions from ISRs may be removed in a future update.

Heap Tracing & Debugging

The following features are documented on the *Heap Memory Debugging* page:

- *Heap Information* (free space, etc.)
- *Heap Corruption Detection*
- *Heap Tracing* (memory leak detection, monitoring, etc.)

Implementation Notes

Knowledge about the regions of memory in the chip comes from the "soc" component, which contains memory layout information for the chip, and the different capabilities of each region. Each region's capabilities are prioritised, so that (for example) dedicated DRAM and IRAM regions will be used for allocations ahead of the more versatile D/IRAM regions.

Each contiguous region of memory contains its own memory heap. The heaps are created using the *multi_heap* functionality. multi_heap allows any contiguous region of memory to be used as a heap.

The heap capabilities allocator uses knowledge of the memory regions to initialize each individual heap. Allocation functions in the heap capabilities API will find the most appropriate heap for the allocation (based on desired capabilities, available space, and preferences for each region's use) and then calling *`multi_heap_malloc()`* or `multi_heap_calloc()` for the heap situated in that particular region.

Calling `free()` involves finding the particular heap corresponding to the freed address, and then calling *`multi_heap_free()`* on that particular multi_heap instance.

API Reference - Heap Allocation

Header File

- components/heap/include/esp_heap_caps.h

Functions

esp_err_t **`heap_caps_register_failed_alloc_callback`**(*esp_alloc_failed_hook_t* callback)

registers a callback function to be invoked if a memory allocation operation fails

Parameters **`callback`** –caller defined callback to be invoked
Returns ESP_OK if callback was registered.

void ***heap_caps_malloc**(size_t size, uint32_t caps)

Allocate a chunk of memory which has the given capabilities.

Equivalent semantics to libc malloc(), for capability-aware memory.

Parameters
- **size** –Size, in bytes, of the amount of memory to allocate
- **caps** –Bitwise OR of MALLOC_CAP_* flags indicating the type of memory to be returned

Returns A pointer to the memory allocated on success, NULL on failure

void **heap_caps_free**(void *ptr)

Free memory previously allocated via heap_caps_malloc() or heap_caps_realloc().

Equivalent semantics to libc free(), for capability-aware memory.

In IDF, `free(p)` is equivalent to `heap_caps_free(p)`.

Parameters **ptr** –Pointer to memory previously returned from heap_caps_malloc() or heap_caps_realloc(). Can be NULL.

void ***heap_caps_realloc**(void *ptr, size_t size, uint32_t caps)

Reallocate memory previously allocated via heap_caps_malloc() or heap_caps_realloc().

Equivalent semantics to libc realloc(), for capability-aware memory.

In IDF, `realloc(p, s)` is equivalent to `heap_caps_realloc(p, s, MALLOC_CAP_8BIT)`.

'caps' parameter can be different to the capabilities that any original 'ptr' was allocated with. In this way, realloc can be used to "move" a buffer if necessary to ensure it meets a new set of capabilities.

Parameters
- **ptr** –Pointer to previously allocated memory, or NULL for a new allocation.
- **size** –Size of the new buffer requested, or 0 to free the buffer.
- **caps** –Bitwise OR of MALLOC_CAP_* flags indicating the type of memory desired for the new allocation.

Returns Pointer to a new buffer of size 'size' with capabilities 'caps', or NULL if allocation failed.

void ***heap_caps_aligned_alloc**(size_t alignment, size_t size, uint32_t caps)

Allocate a aligned chunk of memory which has the given capabilities.

Equivalent semantics to libc aligned_alloc(), for capability-aware memory.

Parameters
- **alignment** –How the pointer received needs to be aligned must be a power of two
- **size** –Size, in bytes, of the amount of memory to allocate
- **caps** –Bitwise OR of MALLOC_CAP_* flags indicating the type of memory to be returned

Returns A pointer to the memory allocated on success, NULL on failure

void **heap_caps_aligned_free**(void *ptr)

Used to deallocate memory previously allocated with heap_caps_aligned_alloc.

Note: This function is deprecated, plase consider using heap_caps_free() instead

---

Parameters **ptr** –Pointer to the memory allocated

void ***heap_caps_aligned_calloc**(size_t alignment, size_t n, size_t size, uint32_t caps)

Allocate a aligned chunk of memory which has the given capabilities. The initialized value in the memory is set to zero.

Parameters

- **alignment** –How the pointer received needs to be aligned must be a power of two
- **n** –Number of continuing chunks of memory to allocate
- **size** –Size, in bytes, of a chunk of memory to allocate
- **caps** –Bitwise OR of MALLOC_CAP_* flags indicating the type of memory to be returned

Returns A pointer to the memory allocated on success, NULL on failure

void ***heap_caps_calloc**(size_t n, size_t size, uint32_t caps)

Allocate a chunk of memory which has the given capabilities. The initialized value in the memory is set to zero.

Equivalent semantics to libc calloc(), for capability-aware memory.

In IDF, `calloc(p)` is equivalent to `heap_caps_calloc(p, MALLOC_CAP_8BIT)`.

Parameters

- **n** –Number of continuing chunks of memory to allocate
- **size** –Size, in bytes, of a chunk of memory to allocate
- **caps** –Bitwise OR of MALLOC_CAP_* flags indicating the type of memory to be returned

Returns A pointer to the memory allocated on success, NULL on failure

size_t **heap_caps_get_total_size**(uint32_t caps)

Get the total size of all the regions that have the given capabilities.

This function takes all regions capable of having the given capabilities allocated in them and adds up the total space they have.

Parameters **caps** –Bitwise OR of MALLOC_CAP_* flags indicating the type of memory
Returns total size in bytes

size_t **heap_caps_get_free_size**(uint32_t caps)

Get the total free size of all the regions that have the given capabilities.

This function takes all regions capable of having the given capabilities allocated in them and adds up the free space they have.

Note that because of heap fragmentation it is probably not possible to allocate a single block of memory of this size. Use heap_caps_get_largest_free_block() for this purpose.

Parameters **caps** –Bitwise OR of MALLOC_CAP_* flags indicating the type of memory
Returns Amount of free bytes in the regions

size_t **heap_caps_get_minimum_free_size**(uint32_t caps)

Get the total minimum free memory of all regions with the given capabilities.

This adds all the low water marks of the regions capable of delivering the memory with the given capabilities.

Note the result may be less than the global all-time minimum available heap of this kind, as "low water marks" are tracked per-region. Individual regions' heaps may have reached their "low water marks" at different points in time. However this result still gives a "worst case" indication for all-time minimum free heap.

Parameters **caps** –Bitwise OR of MALLOC_CAP_* flags indicating the type of memory
Returns Amount of free bytes in the regions

size_t **heap_caps_get_largest_free_block**(uint32_t caps)

Get the largest free block of memory able to be allocated with the given capabilities.

Returns the largest value of `s` for which `heap_caps_malloc(s, caps)` will succeed.

Parameters **caps** –Bitwise OR of MALLOC_CAP_* flags indicating the type of memory
Returns Size of largest free block in bytes.

void **heap_caps_get_info**(*multi_heap_info_t* *info, uint32_t caps)

Get heap info for all regions with the given capabilities.

Calls multi_heap_info() on all heaps which share the given capabilities. The information returned is an aggregate across all matching heaps. The meanings of fields are the same as defined for *multi_heap_info_t*, except that `minimum_free_bytes` has the same caveats described in heap_caps_get_minimum_free_size().

Parameters
- **info** –Pointer to a structure which will be filled with relevant heap metadata.
- **caps** –Bitwise OR of MALLOC_CAP_* flags indicating the type of memory

void **heap_caps_print_heap_info**(uint32_t caps)

Print a summary of all memory with the given capabilities.

Calls multi_heap_info on all heaps which share the given capabilities, and prints a two-line summary for each, then a total summary.

Parameters **caps** –Bitwise OR of MALLOC_CAP_* flags indicating the type of memory

bool **heap_caps_check_integrity_all**(bool print_errors)

Check integrity of all heap memory in the system.

Calls multi_heap_check on all heaps. Optionally print errors if heaps are corrupt.

Calling this function is equivalent to calling heap_caps_check_integrity with the caps argument set to MALLOC_CAP_INVALID.

Parameters **print_errors** –Print specific errors if heap corruption is found.
Returns True if all heaps are valid, False if at least one heap is corrupt.

bool **heap_caps_check_integrity**(uint32_t caps, bool print_errors)

Check integrity of all heaps with the given capabilities.

Calls multi_heap_check on all heaps which share the given capabilities. Optionally print errors if the heaps are corrupt.

See also heap_caps_check_integrity_all to check all heap memory in the system and heap_caps_check_integrity_addr to check memory around a single address.

Parameters
- **caps** –Bitwise OR of MALLOC_CAP_* flags indicating the type of memory
- **print_errors** –Print specific errors if heap corruption is found.

Returns True if all heaps are valid, False if at least one heap is corrupt.

bool **heap_caps_check_integrity_addr**(intptr_t addr, bool print_errors)

Check integrity of heap memory around a given address.

This function can be used to check the integrity of a single region of heap memory, which contains the given address.

This can be useful if debugging heap integrity for corruption at a known address, as it has a lower overhead than checking all heap regions. Note that if the corrupt address moves around between runs (due to timing or other factors) then this approach won't work and you should call heap_caps_check_integrity or heap_caps_check_integrity_all instead.

Note: The entire heap region around the address is checked, not only the adjacent heap blocks.

Parameters
- **addr** –Address in memory. Check for corruption in region containing this address.
- **print_errors** –Print specific errors if heap corruption is found.

Returns True if the heap containing the specified address is valid, False if at least one heap is corrupt or the address doesn't belong to a heap region.

void **heap_caps_malloc_extmem_enable**(size_t limit)

Enable malloc() in external memory and set limit below which malloc() attempts are placed in internal memory.

When external memory is in use, the allocation strategy is to initially try to satisfy smaller allocation requests with internal memory and larger requests with external memory. This sets the limit between the two, as well as generally enabling allocation in external memory.

Parameters **limit** –Limit, in bytes.

void ***heap_caps_malloc_prefer**(size_t size, size_t num, ...)

Allocate a chunk of memory as preference in decreasing order.

Attention The variable parameters are bitwise OR of MALLOC_CAP_* flags indicating the type of memory. This API prefers to allocate memory with the first parameter. If failed, allocate memory with the next parameter. It will try in this order until allocating a chunk of memory successfully or fail to allocate memories with any of the parameters.

Parameters

- **size** –Size, in bytes, of the amount of memory to allocate
- **num** –Number of variable paramters

Returns A pointer to the memory allocated on success, NULL on failure

void ***heap_caps_realloc_prefer**(void *ptr, size_t size, size_t num, ...)

Allocate a chunk of memory as preference in decreasing order.

Parameters

- **ptr** –Pointer to previously allocated memory, or NULL for a new allocation.
- **size** –Size of the new buffer requested, or 0 to free the buffer.
- **num** –Number of variable paramters

Returns Pointer to a new buffer of size ‘size’, or NULL if allocation failed.

void ***heap_caps_calloc_prefer**(size_t n, size_t size, size_t num, ...)

Allocate a chunk of memory as preference in decreasing order.

Parameters

- **n** –Number of continuing chunks of memory to allocate
- **size** –Size, in bytes, of a chunk of memory to allocate
- **num** –Number of variable paramters

Returns A pointer to the memory allocated on success, NULL on failure

void **heap_caps_dump**(uint32_t caps)

Dump the full structure of all heaps with matching capabilities.

Prints a large amount of output to serial (because of locking limitations, the output bypasses stdout/stderr). For each (variable sized) block in each matching heap, the following output is printed on a single line:

- Block address (the data buffer returned by malloc is 4 bytes after this if heap debugging is set to Basic, or 8 bytes otherwise).
- Data size (the data size may be larger than the size requested by malloc, either due to heap fragmentation or because of heap debugging level).
- Address of next block in the heap.
- If the block is free, the address of the next free block is also printed.

Parameters **caps** –Bitwise OR of MALLOC_CAP_* flags indicating the type of memory

void **heap_caps_dump_all**(void)

Dump the full structure of all heaps.

Covers all registered heaps. Prints a large amount of output to serial.

Output is the same as for heap_caps_dump.

size_t **heap_caps_get_allocated_size**(void *ptr)

Return the size that a particular pointer was allocated with.

Note: The app will crash with an assertion failure if the pointer is not valid.

Parameters **ptr** – Pointer to currently allocated heap memory. Must be a pointer value previously returned by heap_caps_malloc,malloc,calloc, etc. and not yet freed.

Returns Size of the memory allocated at this block.

Macros

MALLOC_CAP_EXEC

Flags to indicate the capabilities of the various memory systems.

Memory must be able to run executable code

MALLOC_CAP_32BIT

Memory must allow for aligned 32-bit data accesses.

MALLOC_CAP_8BIT

Memory must allow for 8/16/…-bit data accesses.

MALLOC_CAP_DMA

Memory must be able to accessed by DMA.

MALLOC_CAP_PID2

Memory must be mapped to PID2 memory space (PIDs are not currently used)

MALLOC_CAP_PID3

Memory must be mapped to PID3 memory space (PIDs are not currently used)

MALLOC_CAP_PID4

Memory must be mapped to PID4 memory space (PIDs are not currently used)

MALLOC_CAP_PID5

Memory must be mapped to PID5 memory space (PIDs are not currently used)

MALLOC_CAP_PID6

Memory must be mapped to PID6 memory space (PIDs are not currently used)

MALLOC_CAP_PID7

Memory must be mapped to PID7 memory space (PIDs are not currently used)

MALLOC_CAP_SPIRAM

Memory must be in SPI RAM.

MALLOC_CAP_INTERNAL

Memory must be internal; specifically it should not disappear when flash/spiram cache is switched off.

MALLOC_CAP_DEFAULT

Memory can be returned in a non-capability-specific memory allocation (e.g. malloc(), calloc()) call.

MALLOC_CAP_IRAM_8BIT

Memory must be in IRAM and allow unaligned access.

MALLOC_CAP_RETENTION

Memory must be able to accessed by retention DMA.

MALLOC_CAP_RTCRAM

Memory must be in RTC fast memory.

MALLOC_CAP_INVALID

Memory can't be used / list end marker.

Type Definitions

typedef void (***esp_alloc_failed_hook_t**)(size_t size, uint32_t caps, const char *function_name)

callback called when a allocation operation fails, if registered

Param size in bytes of failed allocation
Param caps capabillites requested of failed allocation
Param function_name function which generated the failure

API Reference - Initialisation

Header File

- components/heap/include/esp_heap_caps_init.h

Functions

void **heap_caps_init**(void)

Initialize the capability-aware heap allocator.

This is called once in the IDF startup code. Do not call it at other times.

void **heap_caps_enable_nonos_stack_heaps**(void)

Enable heap(s) in memory regions where the startup stacks are located.

On startup, the pro/app CPUs have a certain memory region they use as stack, so we cannot do allocations in the regions these stack frames are. When FreeRTOS is completely started, they do not use that memory anymore and heap(s) there can be enabled.

esp_err_t **heap_caps_add_region**(intptr_t start, intptr_t end)

Add a region of memory to the collection of heaps at runtime.

Most memory regions are defined in soc_memory_layout.c for the SoC, and are registered via heap_caps_init(). Some regions can't be used immediately and are later enabled via heap_caps_enable_nonos_stack_heaps().

Call this function to add a region of memory to the heap at some later time.

This function does not consider any of the "reserved" regions or other data in soc_memory_layout, caller needs to consider this themselves.

All memory within the region specified by start & end parameters must be otherwise unused.

The capabilities of the newly registered memory will be determined by the start address, as looked up in the regions specified in soc_memory_layout.c.

Use heap_caps_add_region_with_caps() to register a region with custom capabilities.

Parameters
- **start** –Start address of new region.
- **end** –End address of new region.

Returns ESP_OK on success, ESP_ERR_INVALID_ARG if a parameter is invalid, ESP_ERR_NOT_FOUND if the specified start address doesn't reside in a known region, or any error returned by heap_caps_add_region_with_caps().

esp_err_t **heap_caps_add_region_with_caps** (const uint32_t caps[], intptr_t start, intptr_t end)

Add a region of memory to the collection of heaps at runtime, with custom capabilities.

Similar to heap_caps_add_region(), only custom memory capabilities are specified by the caller.

Parameters
- **caps** –Ordered array of capability masks for the new region, in order of priority. Must have length SOC_MEMORY_TYPE_NO_PRIOS. Does not need to remain valid after the call returns.
- **start** –Start address of new region.
- **end** –End address of new region.

Returns
- ESP_OK on success
- ESP_ERR_INVALID_ARG if a parameter is invalid
- ESP_ERR_NO_MEM if no memory to register new heap.
- ESP_ERR_INVALID_SIZE if the memory region is too small to fit a heap
- ESP_FAIL if region overlaps the start and/or end of an existing region

API Reference - Multi Heap API

(Note: The multi heap API is used internally by the heap capabilities allocator. Most IDF programs will never need to call this API directly.)

Header File

- components/heap/include/multi_heap.h

Functions

void ***multi_heap_aligned_alloc** (*multi_heap_handle_t* heap, size_t size, size_t alignment)

allocate a chunk of memory with specific alignment

Parameters
- **heap** –Handle to a registered heap.
- **size** –size in bytes of memory chunk
- **alignment** –how the memory must be aligned

Returns pointer to the memory allocated, NULL on failure

void ***multi_heap_malloc** (*multi_heap_handle_t* heap, size_t size)

malloc() a buffer in a given heap

Semantics are the same as standard malloc(), only the returned buffer will be allocated in the specified heap.

Parameters
- **heap** –Handle to a registered heap.
- **size** –Size of desired buffer.

Returns Pointer to new memory, or NULL if allocation fails.

void **multi_heap_aligned_free** (*multi_heap_handle_t* heap, void *p)

free() a buffer aligned in a given heap.

Note: This function is deprecated, consider using multi_heap_free() instead

Parameters

- **heap** –Handle to a registered heap.
- **p** –NULL, or a pointer previously returned from multi_heap_aligned_alloc() for the same heap.

void **multi_heap_free**(*multi_heap_handle_t* heap, void *p)

free() a buffer in a given heap.

Semantics are the same as standard free(), only the argument 'p' must be NULL or have been allocated in the specified heap.

Parameters

- **heap** –Handle to a registered heap.
- **p** –NULL, or a pointer previously returned from multi_heap_malloc() or multi_heap_realloc() for the same heap.

void ***multi_heap_realloc**(*multi_heap_handle_t* heap, void *p, size_t size)

realloc() a buffer in a given heap.

Semantics are the same as standard realloc(), only the argument 'p' must be NULL or have been allocated in the specified heap.

Parameters

- **heap** –Handle to a registered heap.
- **p** –NULL, or a pointer previously returned from multi_heap_malloc() or multi_heap_realloc() for the same heap.
- **size** –Desired new size for buffer.

Returns New buffer of 'size' containing contents of 'p', or NULL if reallocation failed.

size_t **multi_heap_get_allocated_size**(*multi_heap_handle_t* heap, void *p)

Return the size that a particular pointer was allocated with.

Parameters

- **heap** –Handle to a registered heap.
- **p** –Pointer, must have been previously returned from multi_heap_malloc() or multi_heap_realloc() for the same heap.

Returns Size of the memory allocated at this block. May be more than the original size argument, due to padding and minimum block sizes.

multi_heap_handle_t **multi_heap_register**(void *start, size_t size)

Register a new heap for use.

This function initialises a heap at the specified address, and returns a handle for future heap operations.

There is no equivalent function for deregistering a heap - if all blocks in the heap are free, you can immediately start using the memory for other purposes.

Parameters

- **start** –Start address of the memory to use for a new heap.
- **size** –Size (in bytes) of the new heap.

Returns Handle of a new heap ready for use, or NULL if the heap region was too small to be initialised.

void **multi_heap_set_lock**(*multi_heap_handle_t* heap, void *lock)

Associate a private lock pointer with a heap.

The lock argument is supplied to the MULTI_HEAP_LOCK() and MULTI_HEAP_UNLOCK() macros, defined in multi_heap_platform.h.

The lock in question must be recursive.

When the heap is first registered, the associated lock is NULL.

Parameters
- **heap** –Handle to a registered heap.
- **lock** –Optional pointer to a locking structure to associate with this heap.

void **multi_heap_dump**(*multi_heap_handle_t* heap)

Dump heap information to stdout.

For debugging purposes, this function dumps information about every block in the heap to stdout.

Parameters **heap** –Handle to a registered heap.

bool **multi_heap_check**(*multi_heap_handle_t* heap, bool print_errors)

Check heap integrity.

Walks the heap and checks all heap data structures are valid. If any errors are detected, an error-specific message can be optionally printed to stderr. Print behaviour can be overriden at compile time by defining MULTI_CHECK_FAIL_PRINTF in multi_heap_platform.h.

Parameters
- **heap** –Handle to a registered heap.
- **print_errors** –If true, errors will be printed to stderr.

Returns true if heap is valid, false otherwise.

size_t **multi_heap_free_size**(*multi_heap_handle_t* heap)

Return free heap size.

Returns the number of bytes available in the heap.

Equivalent to the total_free_bytes member returned by multi_heap_get_heap_info().

Note that the heap may be fragmented, so the actual maximum size for a single malloc() may be lower. To know this size, see the largest_free_block member returned by multi_heap_get_heap_info().

Parameters **heap** –Handle to a registered heap.
Returns Number of free bytes.

size_t **multi_heap_minimum_free_size**(*multi_heap_handle_t* heap)

Return the lifetime minimum free heap size.

Equivalent to the minimum_free_bytes member returned by multi_heap_get_info().

Returns the lifetime "low water mark" of possible values returned from multi_free_heap_size(), for the specified heap.

Parameters **heap** –Handle to a registered heap.
Returns Number of free bytes.

void **multi_heap_get_info**(*multi_heap_handle_t* heap, *multi_heap_info_t* *info)

Return metadata about a given heap.

Fills a *multi_heap_info_t* structure with information about the specified heap.

Parameters
- **heap** –Handle to a registered heap.
- **info** –Pointer to a structure to fill with heap metadata.

Structures

struct **multi_heap_info_t**

Structure to access heap metadata via multi_heap_get_info.

Public Members

size_t **total_free_bytes**

Total free bytes in the heap. Equivalent to multi_free_heap_size().

size_t **total_allocated_bytes**

Total bytes allocated to data in the heap.

size_t **largest_free_block**

Size of largest free block in the heap. This is the largest malloc-able size.

size_t **minimum_free_bytes**

Lifetime minimum free heap size. Equivalent to multi_minimum_free_heap_size().

size_t **allocated_blocks**

Number of (variable size) blocks allocated in the heap.

size_t **free_blocks**

Number of (variable size) free blocks in the heap.

size_t **total_blocks**

Total number of (variable size) blocks in the heap.

Type Definitions

typedef struct multi_heap_info ***multi_heap_handle_t**

Opaque handle to a registered heap.

2.7.12 Heap Memory Debugging

Overview

ESP-IDF integrates tools for requesting *heap information*, *detecting heap corruption*, and *tracing memory leaks*. These can help track down memory-related bugs.

For general information about the heap memory allocator, see the *Heap Memory Allocation* page.

Heap Information

To obtain information about the state of the heap:

- `xPortGetFreeHeapSize()` is a FreeRTOS function which returns the number of free bytes in the (data memory) heap. This is equivalent to calling `heap_caps_get_free_size(MALLOC_CAP_8BIT)`.
- *`heap_caps_get_free_size()`* can also be used to return the current free memory for different memory capabilities.
- *`heap_caps_get_largest_free_block()`* can be used to return the largest free block in the heap. This is the largest single allocation which is currently possible. Tracking this value and comparing to total free heap allows you to detect heap fragmentation.
- `xPortGetMinimumEverFreeHeapSize()` and the related *`heap_caps_get_minimum_free_size()`* can be used to track the heap "low water mark" since boot.
- *`heap_caps_get_info()`* returns a *`multi_heap_info_t`* structure which contains the information from the above functions, plus some additional heap-specific data (number of allocations, etc.).

- *heap_caps_print_heap_info()* prints a summary to stdout of the information returned by *heap_caps_get_info()*.
- *heap_caps_dump()* and *heap_caps_dump_all()* will output detailed information about the structure of each block in the heap. Note that this can be large amount of output.

Heap Corruption Detection

Heap corruption detection allows you to detect various types of heap memory errors:

- Out of bounds writes & buffer overflow.
- Writes to freed memory.
- Reads from freed or uninitialized memory,

Assertions The heap implementation (`multi_heap.c`, etc.) includes a lot of assertions which will fail if the heap memory is corrupted. To detect heap corruption most effectively, ensure that assertions are enabled in the project configuration menu under `Compiler options` -> *CONFIG_COMPILER_OPTIMIZATION_ASSERTION_LEVEL*.

If a heap integrity assertion fails, a line will be printed like `CORRUPT HEAP: multi_heap.c:225 detected at 0x3ffbb71c`. The memory address which is printed is the address of the heap structure which has corrupt content.

It's also possible to manually check heap integrity by calling *heap_caps_check_integrity_all()* or related functions. This function checks all of requested heap memory for integrity, and can be used even if assertions are disabled. If the integrity check prints an error, it will also contain the address(es) of corrupt heap structures.

Memory Allocation Failed Hook Users can use *heap_caps_register_failed_alloc_callback()* to register a callback that will be invoked every time a allocation operation fails.

Additionaly user can enable a generation of a system abort if allocation operation fails by following the steps below: - In the project configuration menu, navigate to `Component config` -> `Heap Memory Debugging` and select `Abort if memory allocation fails` option (see *CONFIG_HEAP_ABORT_WHEN_ALLOCATION_FAILS*).

The example below show how to register a allocation failure callback:

```
#include "esp_heap_caps.h"

void heap_caps_alloc_failed_hook(size_t requested_size, uint32_t caps, const char␣
↪*function_name)
{
  printf("%s was called but failed to allocate %d bytes with 0x%X capabilities. \n
↪",function_name, requested_size, caps);
}

void app_main()
{
    ...
    esp_err_t error = heap_caps_register_failed_alloc_callback(heap_caps_alloc_
↪failed_hook);
    ...
    void *ptr = heap_caps_malloc(allocation_size, MALLOC_CAP_DEFAULT);
    ...
}
```

Finding Heap Corruption Memory corruption can be one of the hardest classes of bugs to find and fix, as one area of memory can be corrupted from a totally different place. Some tips:

- A crash with a `CORRUPT HEAP:` message will usually include a stack trace, but this stack trace is rarely useful. The crash is the symptom of memory corruption when the system realises the heap is corrupt, but usually the corruption happened elsewhere and earlier in time.

- Increasing the Heap memory debugging *Configuration* level to "Light impact" or "Comprehensive" can give you a more accurate message with the first corrupt memory address.
- Adding regular calls to `heap_caps_check_integrity_all()` or `heap_caps_check_integrity_addr()` in your code will help you pin down the exact time that the corruption happened. You can move these checks around to "close in on" the section of code that corrupted the heap.
- Based on the memory address which is being corrupted, you can use *JTAG debugging* to set a watchpoint on this address and have the CPU halt when it is written to.
- If you don't have JTAG, but you do know roughly when the corruption happens, then you can set a watchpoint in software just beforehand via `esp_cpu_set_watchpoint()`. A fatal exception will occur when the watchpoint triggers. For example `esp_cpu_set_watchpoint(0, (void *)addr, 4, ESP_WATCHPOINT_STORE`. Note that watchpoints are per-CPU and are set on the current running CPU only, so if you don't know which CPU is corrupting memory then you will need to call this function on both CPUs.
- For buffer overflows, *heap tracing* in `HEAP_TRACE_ALL` mode lets you see which callers are allocating which addresses from the heap. See *Heap Tracing To Find Heap Corruption* for more details. If you can find the function which allocates memory with an address immediately before the address which is corrupted, this will probably be the function which overflows the buffer.
- Calling `heap_caps_dump()` or `heap_caps_dump_all()` can give an indication of what heap blocks are surrounding the corrupted region and may have overflowed/underflowed/etc.

Configuration Temporarily increasing the heap corruption detection level can give more detailed information about heap corruption errors.

In the project configuration menu, under `Component config` there is a menu `Heap memory debugging`. The setting *CONFIG_HEAP_CORRUPTION_DETECTION* can be set to one of three levels:

Basic (no poisoning) This is the default level. No special heap corruption features are enabled, but provided assertions are enabled (the default configuration) then a heap corruption error will be printed if any of the heap's internal data structures appear overwritten or corrupted. This usually indicates a buffer overrun or out of bounds write.

If assertions are enabled, an assertion will also trigger if a double-free occurs (the same memory is freed twice).

Calling `heap_caps_check_integrity()` in Basic mode will check the integrity of all heap structures, and print errors if any appear to be corrupted.

Light Impact At this level, heap memory is additionally "poisoned" with head and tail "canary bytes" before and after each block which is allocated. If an application writes outside the bounds of allocated buffers, the canary bytes will be corrupted and the integrity check will fail.

The head canary word is 0xABBA1234 (3412BAAB in byte order), and the tail canary word is 0xBAAD5678 (7856ADBA in byte order).

"Basic" heap corruption checks can also detect most out of bounds writes, but this setting is more precise as even a single byte overrun can be detected. With Basic heap checks, the number of overrun bytes before a failure is detected will depend on the properties of the heap.

Enabling "Light Impact" checking increases memory usage, each individual allocation will use 9 to 12 additional bytes of memory (depending on alignment).

Each time `free()` is called in Light Impact mode, the head and tail canary bytes of the buffer being freed are checked against the expected values.

When `heap_caps_check_integrity()` is called, all allocated blocks of heap memory have their canary bytes checked against the expected values.

In both cases, the check is that the first 4 bytes of an allocated block (before the buffer returned to the user) should be the word 0xABBA1234. Then the last 4 bytes of the allocated block (after the buffer returned to the user) should be the word 0xBAAD5678.

Different values usually indicate buffer underrun or overrun, respectively.

Comprehensive This level incorporates the "light impact" detection features plus additional checks for uninitialised-access and use-after-free bugs. In this mode, all freshly allocated memory is filled with the pattern 0xCE, and all freed memory is filled with the pattern 0xFE.

Enabling "Comprehensive" detection has a substantial runtime performance impact (as all memory needs to be set to the allocation patterns each time a malloc/free completes, and the memory also needs to be checked each time.) However it allows easier detection of memory corruption bugs which are much more subtle to find otherwise. It is recommended to only enable this mode when debugging, not in production.

Crashes in Comprehensive Mode If an application crashes reading/writing an address related to 0xCECECECE in Comprehensive mode, this indicates it has read uninitialized memory. The application should be changed to either use calloc() (which zeroes memory), or initialize the memory before using it. The value 0xCECECECE may also be seen in stack-allocated automatic variables, because in IDF most task stacks are originally allocated from the heap and in C stack memory is uninitialized by default.

If an application crashes and the exception register dump indicates that some addresses or values were 0xFEFEFEFE, this indicates it is reading heap memory after it has been freed (a "use after free bug".) The application should be changed to not access heap memory after it has been freed.

If a call to malloc() or realloc() causes a crash because it expected to find the pattern 0xFEFEFEFE in free memory and a different pattern was found, then this indicates the app has a use-after-free bug where it is writing to memory which has already been freed.

Manual Heap Checks in Comprehensive Mode Calls to `heap_caps_check_integrity()` may print errors relating to 0xFEFEFEFE, 0xABBA1234 or 0xBAAD5678. In each case the checker is expecting to find a given pattern, and will error out if this is not found:

- For free heap blocks, the checker expects to find all bytes set to 0xFE. Any other values indicate a use-after-free bug where free memory has been incorrectly overwritten.
- For allocated heap blocks, the behaviour is the same as for *Light Impact* mode. The canary bytes 0xABBA1234 and 0xBAAD5678 are checked at the head and tail of each allocated buffer, and any variation indicates a buffer overrun/underrun.

Heap Task Tracking

Heap Task Tracking can be used to get per task info for heap memory allocation. Application has to specify the heap capabilities for which the heap allocation is to be tracked.

Example code is provided in system/heap_task_tracking

Heap Tracing

Heap Tracing allows tracing of code which allocates/frees memory. Two tracing modes are supported:

- Standalone. In this mode trace data are kept on-board, so the size of gathered information is limited by the buffer assigned for that purposes. Analysis is done by the on-board code. There are a couple of APIs available for accessing and dumping collected info.
- Host-based. This mode does not have the limitation of the standalone mode, because trace data are sent to the host over JTAG connection using app_trace library. Later on they can be analysed using special tools.

Heap tracing can perform two functions:

- Leak checking: find memory which is allocated and never freed.
- Heap use analysis: show all functions that are allocating/freeing memory while the trace is running.

How To Diagnose Memory Leaks If you suspect a memory leak, the first step is to figure out which part of the program is leaking memory. Use the `xPortGetFreeHeapSize()`, *`heap_caps_get_free_size()`*, or *related functions* to track memory use over the life of the application. Try to narrow the leak down to a single function or sequence of functions where free memory always decreases and never recovers.

Standalone Mode Once you've identified the code which you think is leaking:

- In the project configuration menu, navigate to `Component settings` -> `Heap Memory Debugging` -> `Heap tracing` and select `Standalone` option (see *CONFIG_HEAP_TRACING_DEST*).
- Call the function *`heap_trace_init_standalone()`* early in the program, to register a buffer which can be used to record the memory trace.
- Call the function *`heap_trace_start()`* to begin recording all mallocs/frees in the system. Call this immediately before the piece of code which you suspect is leaking memory.
- Call the function *`heap_trace_stop()`* to stop the trace once the suspect piece of code has finished executing.
- Call the function *`heap_trace_dump()`* to dump the results of the heap trace.

An example:

```
#include "esp_heap_trace.h"

#define NUM_RECORDS 100
static heap_trace_record_t trace_record[NUM_RECORDS]; // This buffer must be in␣
↪internal RAM

...

void app_main()
{
    ...
    ESP_ERROR_CHECK( heap_trace_init_standalone(trace_record, NUM_RECORDS) );
    ...
}

void some_function()
{
    ESP_ERROR_CHECK( heap_trace_start(HEAP_TRACE_LEAKS) );

    do_something_you_suspect_is_leaking();

    ESP_ERROR_CHECK( heap_trace_stop() );
    heap_trace_dump();
    ...
}
```

The output from the heap trace will look something like this:

```
2 allocations trace (100 entry buffer)
32 bytes (@ 0x3ffaf214) allocated CPU 0 ccount 0x2e9b7384 caller␣
↪0x400d276d:0x400d27c1
0x400d276d: leak_some_memory at /path/to/idf/examples/get-started/blink/main/./
↪blink.c:27

0x400d27c1: blink_task at /path/to/idf/examples/get-started/blink/main/./blink.c:52

8 bytes (@ 0x3ffaf804) allocated CPU 0 ccount 0x2e9b79c0 caller␣
↪0x400d2776:0x400d27c1
0x400d2776: leak_some_memory at /path/to/idf/examples/get-started/blink/main/./
↪blink.c:29

0x400d27c1: blink_task at /path/to/idf/examples/get-started/blink/main/./blink.c:52
```

(continues on next page)

(continued from previous page)

```
40 bytes 'leaked' in trace (2 allocations)
total allocations 2 total frees 0
```

(Above example output is using *IDF Monitor* to automatically decode PC addresses to their source files & line number.)

The first line indicates how many allocation entries are in the buffer, compared to its total size.

In `HEAP_TRACE_LEAKS` mode, for each traced memory allocation which has not already been freed a line is printed with:

- `XX bytes` is number of bytes allocated
- `@ 0x...` is the heap address returned from malloc/calloc.
- `CPU x` is the CPU (0 or 1) running when the allocation was made.
- `ccount 0x...` is the CCOUNT (CPU cycle count) register value when the allocation was mode. Is different for CPU 0 vs CPU 1.
- `caller 0x...` gives the call stack of the call to malloc()/free(), as a list of PC addresses. These can be decoded to source files and line numbers, as shown above.

The depth of the call stack recorded for each trace entry can be configured in the project configuration menu, under `Heap Memory Debugging` -> `Enable heap tracing` -> `Heap tracing stack depth`. Up to 10 stack frames can be recorded for each allocation (the default is 2). Each additional stack frame increases the memory usage of each `heap_trace_record_t` record by eight bytes.

Finally, the total number of 'leaked' bytes (bytes allocated but not freed while trace was running) is printed, and the total number of allocations this represents.

A warning will be printed if the trace buffer was not large enough to hold all the allocations which happened. If you see this warning, consider either shortening the tracing period or increasing the number of records in the trace buffer.

Host-Based Mode Once you've identified the code which you think is leaking:

- In the project configuration menu, navigate to `Component settings` -> `Heap Memory Debugging` -> *CONFIG_HEAP_TRACING_DEST* and select `Host-Based`.
- In the project configuration menu, navigate to `Component settings` -> `Application Level Tracing` -> *CONFIG_APPTRACE_DESTINATION* and select `Trace memory`.
- In the project configuration menu, navigate to `Component settings` -> `Application Level Tracing` -> `FreeRTOS SystemView Tracing` and enable *CONFIG_APPTRACE_SV_ENABLE*.
- Call the function *`heap_trace_init_tohost()`* early in the program, to initialize JTAG heap tracing module.
- Call the function *`heap_trace_start()`* to begin recording all mallocs/frees in the system. Call this immediately before the piece of code which you suspect is leaking memory. In host-based mode argument to this function is ignored and heap tracing module behaves like `HEAP_TRACE_ALL` was passed: all allocations and deallocations are sent to the host.
- Call the function *`heap_trace_stop()`* to stop the trace once the suspect piece of code has finished executing.

An example:

```
#include "esp_heap_trace.h"

...

void app_main()
{
    ...
    ESP_ERROR_CHECK( heap_trace_init_tohost() );
    ...
}
```

(continues on next page)

(continued from previous page)

```
void some_function()
{
    ESP_ERROR_CHECK( heap_trace_start(HEAP_TRACE_LEAKS) );

    do_something_you_suspect_is_leaking();

    ESP_ERROR_CHECK( heap_trace_stop() );
    ...
}
```

To gather and analyse heap trace do the following on the host:

1. Build the program and download it to the target as described in *Getting Started Guide*.
2. Run OpenOCD (see *JTAG Debugging*).

Note: In order to use this feature you need OpenOCD version *v0.10.0-esp32-20181105* or later.

3. You can use GDB to start and/or stop tracing automatically. To do this you need to prepare special `gdbinit` file:

```
target remote :3333

mon reset halt
flushregs

tb heap_trace_start
commands
mon esp sysview start file:///tmp/heap.svdat
c
end

tb heap_trace_stop
commands
mon esp sysview stop
end

c
```

Using this file GDB will connect to the target, reset it, and start tracing when program hits breakpoint at *`heap_trace_start()`*. Trace data will be saved to `/tmp/heap_log.svdat`. Tracing will be stopped when program hits breakpoint at *`heap_trace_stop()`*.

4. Run GDB using the following command `xtensa-esp32-elf-gdb -x gdbinit </path/to/program/elf>`
5. Quit GDB when program stops at *`heap_trace_stop()`*. Trace data are saved in `/tmp/heap.svdat`
6. Run processing script `$IDF_PATH/tools/esp_app_trace/sysviewtrace_proc.py -p -b </path/to/program/elf> /tmp/heap_log.svdat`

The output from the heap trace will look something like this:

```
Parse trace from '/tmp/heap.svdat'...
Stop parsing trace. (Timeout 0.000000 sec while reading 1 bytes!)
Process events from '['/tmp/heap.svdat']'...
[0.002244575] HEAP: Allocated 1 bytes @ 0x3ffaffd8 from task "alloc" on core 0 by:
/home/user/projects/esp/esp-idf/examples/system/sysview_tracing_heap_log/main/
↪sysview_heap_log.c:47
/home/user/projects/esp/esp-idf/components/freertos/port.c:355 (discriminator 1)

[0.002258425] HEAP: Allocated 2 bytes @ 0x3ffaffe0 from task "alloc" on core 0 by:
```

(continues on next page)

(continued from previous page)

```
/home/user/projects/esp/esp-idf/examples/system/sysview_tracing_heap_log/main/
↪sysview_heap_log.c:48
/home/user/projects/esp/esp-idf/components/freertos/port.c:355 (discriminator 1)

[0.002563725] HEAP: Freed bytes @ 0x3ffaffe0 from task "free" on core 0 by:
/home/user/projects/esp/esp-idf/examples/system/sysview_tracing_heap_log/main/
↪sysview_heap_log.c:31 (discriminator 9)
/home/user/projects/esp/esp-idf/components/freertos/port.c:355 (discriminator 1)

[0.002782950] HEAP: Freed bytes @ 0x3ffb40b8 from task "main" on core 0 by:
/home/user/projects/esp/esp-idf/components/freertos/tasks.c:4590
/home/user/projects/esp/esp-idf/components/freertos/tasks.c:4590

[0.002798700] HEAP: Freed bytes @ 0x3ffb50bc from task "main" on core 0 by:
/home/user/projects/esp/esp-idf/components/freertos/tasks.c:4590
/home/user/projects/esp/esp-idf/components/freertos/tasks.c:4590

[0.102436025] HEAP: Allocated 2 bytes @ 0x3ffaffe0 from task "alloc" on core 0 by:
/home/user/projects/esp/esp-idf/examples/system/sysview_tracing_heap_log/main/
↪sysview_heap_log.c:47
/home/user/projects/esp/esp-idf/components/freertos/port.c:355 (discriminator 1)

[0.102449800] HEAP: Allocated 4 bytes @ 0x3ffaffe8 from task "alloc" on core 0 by:
/home/user/projects/esp/esp-idf/examples/system/sysview_tracing_heap_log/main/
↪sysview_heap_log.c:48
/home/user/projects/esp/esp-idf/components/freertos/port.c:355 (discriminator 1)

[0.102666150] HEAP: Freed bytes @ 0x3ffaffe8 from task "free" on core 0 by:
/home/user/projects/esp/esp-idf/examples/system/sysview_tracing_heap_log/main/
↪sysview_heap_log.c:31 (discriminator 9)
/home/user/projects/esp/esp-idf/components/freertos/port.c:355 (discriminator 1)

[0.202436200] HEAP: Allocated 3 bytes @ 0x3ffaffe8 from task "alloc" on core 0 by:
/home/user/projects/esp/esp-idf/examples/system/sysview_tracing_heap_log/main/
↪sysview_heap_log.c:47
/home/user/projects/esp/esp-idf/components/freertos/port.c:355 (discriminator 1)

[0.202451725] HEAP: Allocated 6 bytes @ 0x3ffafff0 from task "alloc" on core 0 by:
/home/user/projects/esp/esp-idf/examples/system/sysview_tracing_heap_log/main/
↪sysview_heap_log.c:48
/home/user/projects/esp/esp-idf/components/freertos/port.c:355 (discriminator 1)

[0.202667075] HEAP: Freed bytes @ 0x3ffafff0 from task "free" on core 0 by:
/home/user/projects/esp/esp-idf/examples/system/sysview_tracing_heap_log/main/
↪sysview_heap_log.c:31 (discriminator 9)
/home/user/projects/esp/esp-idf/components/freertos/port.c:355 (discriminator 1)

[0.302436000] HEAP: Allocated 4 bytes @ 0x3ffafff0 from task "alloc" on core 0 by:
/home/user/projects/esp/esp-idf/examples/system/sysview_tracing_heap_log/main/
↪sysview_heap_log.c:47
/home/user/projects/esp/esp-idf/components/freertos/port.c:355 (discriminator 1)

[0.302451475] HEAP: Allocated 8 bytes @ 0x3ffb40b8 from task "alloc" on core 0 by:
/home/user/projects/esp/esp-idf/examples/system/sysview_tracing_heap_log/main/
↪sysview_heap_log.c:48
/home/user/projects/esp/esp-idf/components/freertos/port.c:355 (discriminator 1)

[0.302667500] HEAP: Freed bytes @ 0x3ffb40b8 from task "free" on core 0 by:
/home/user/projects/esp/esp-idf/examples/system/sysview_tracing_heap_log/main/
↪sysview_heap_log.c:31 (discriminator 9)
/home/user/projects/esp/esp-idf/components/freertos/port.c:355 (discriminator 1)
```

(continues on next page)

(continued from previous page)

```
Processing completed.
Processed 1019 events
=============== HEAP TRACE REPORT ===============
Processed 14 heap events.
[0.002244575] HEAP: Allocated 1 bytes @ 0x3ffaffd8 from task "alloc" on core 0 by:
/home/user/projects/esp/esp-idf/examples/system/sysview_tracing_heap_log/main/
↪sysview_heap_log.c:47
/home/user/projects/esp/esp-idf/components/freertos/port.c:355 (discriminator 1)

[0.102436025] HEAP: Allocated 2 bytes @ 0x3ffaffe0 from task "alloc" on core 0 by:
/home/user/projects/esp/esp-idf/examples/system/sysview_tracing_heap_log/main/
↪sysview_heap_log.c:47
/home/user/projects/esp/esp-idf/components/freertos/port.c:355 (discriminator 1)

[0.202436200] HEAP: Allocated 3 bytes @ 0x3ffaffe8 from task "alloc" on core 0 by:
/home/user/projects/esp/esp-idf/examples/system/sysview_tracing_heap_log/main/
↪sysview_heap_log.c:47
/home/user/projects/esp/esp-idf/components/freertos/port.c:355 (discriminator 1)

[0.302436000] HEAP: Allocated 4 bytes @ 0x3ffafff0 from task "alloc" on core 0 by:
/home/user/projects/esp/esp-idf/examples/system/sysview_tracing_heap_log/main/
↪sysview_heap_log.c:47
/home/user/projects/esp/esp-idf/components/freertos/port.c:355 (discriminator 1)

Found 10 leaked bytes in 4 blocks.
```

Heap Tracing To Find Heap Corruption Heap tracing can also be used to help track down heap corruption. When a region in heap is corrupted, it may be from some other part of the program which allocated memory at a nearby address.

If you have some idea at what time the corruption occurred, enabling heap tracing in `HEAP_TRACE_ALL` mode allows you to record all of the functions which allocated memory, and the addresses of the allocations.

Using heap tracing in this way is very similar to memory leak detection as described above. For memory which is allocated and not freed, the output is the same. However, records will also be shown for memory which has been freed.

Performance Impact Enabling heap tracing in menuconfig increases the code size of your program, and has a very small negative impact on performance of heap allocation/free operations even when heap tracing is not running.

When heap tracing is running, heap allocation/free operations are substantially slower than when heap tracing is stopped. Increasing the depth of stack frames recorded for each allocation (see above) will also increase this performance impact.

False-Positive Memory Leaks Not everything printed by *`heap_trace_dump()`* is necessarily a memory leak. Among things which may show up here, but are not memory leaks:

- Any memory which is allocated after *`heap_trace_start()`* but then freed after *`heap_trace_stop()`* will appear in the leak dump.
- Allocations may be made by other tasks in the system. Depending on the timing of these tasks, it's quite possible this memory is freed after *`heap_trace_stop()`* is called.
- The first time a task uses stdio - for example, when it calls `printf()` - a lock (RTOS mutex semaphore) is allocated by the libc. This allocation lasts until the task is deleted.
- Certain uses of `printf()`, such as printing floating point numbers, will allocate some memory from the heap on demand. These allocations last until the task is deleted.
- The Bluetooth, WiFi, and TCP/IP libraries will allocate heap memory buffers to handle incoming or outgoing data. These memory buffers are usually short lived, but some may be shown in the heap leak trace if the data was received/transmitted by the lower levels of the network while the leak trace was running.

- TCP connections will continue to use some memory after they are closed, because of the `TIME_WAIT` state. After the `TIME_WAIT` period has completed, this memory will be freed.

One way to differentiate between "real" and "false positive" memory leaks is to call the suspect code multiple times while tracing is running, and look for patterns (multiple matching allocations) in the heap trace output.

API Reference - Heap Tracing

Header File

- components/heap/include/esp_heap_trace.h

Functions

esp_err_t **heap_trace_init_standalone** (*heap_trace_record_t* *record_buffer, size_t num_records)

Initialise heap tracing in standalone mode.

This function must be called before any other heap tracing functions.

To disable heap tracing and allow the buffer to be freed, stop tracing and then call heap_trace_init_standalone(NULL, 0);

Parameters
- **record_buffer** –Provide a buffer to use for heap trace data. Must remain valid any time heap tracing is enabled, meaning it must be allocated from internal memory not in PSRAM.
- **num_records** –Size of the heap trace buffer, as number of record structures.

Returns
- ESP_ERR_NOT_SUPPORTED Project was compiled without heap tracing enabled in menuconfig.
- ESP_ERR_INVALID_STATE Heap tracing is currently in progress.
- ESP_OK Heap tracing initialised successfully.

esp_err_t **heap_trace_init_tohost** (void)

Initialise heap tracing in host-based mode.

This function must be called before any other heap tracing functions.

Returns
- ESP_ERR_INVALID_STATE Heap tracing is currently in progress.
- ESP_OK Heap tracing initialised successfully.

esp_err_t **heap_trace_start** (*heap_trace_mode_t* mode)

Start heap tracing. All heap allocations & frees will be traced, until heap_trace_stop() is called.

Note: heap_trace_init_standalone() must be called to provide a valid buffer, before this function is called.

Note: Calling this function while heap tracing is running will reset the heap trace state and continue tracing.

Parameters **mode** –Mode for tracing.
- HEAP_TRACE_ALL means all heap allocations and frees are traced.
- HEAP_TRACE_LEAKS means only suspected memory leaks are traced. (When memory is freed, the record is removed from the trace buffer.)

Returns
- ESP_ERR_NOT_SUPPORTED Project was compiled without heap tracing enabled in menuconfig.
- ESP_ERR_INVALID_STATE A non-zero-length buffer has not been set via heap_trace_init_standalone().
- ESP_OK Tracing is started.

esp_err_t **heap_trace_stop**(void)

Stop heap tracing.

Returns

- ESP_ERR_NOT_SUPPORTED Project was compiled without heap tracing enabled in menuconfig.
- ESP_ERR_INVALID_STATE Heap tracing was not in progress.
- ESP_OK Heap tracing stopped..

esp_err_t **heap_trace_resume**(void)

Resume heap tracing which was previously stopped.

Unlike heap_trace_start(), this function does not clear the buffer of any pre-existing trace records.

The heap trace mode is the same as when heap_trace_start() was last called (or HEAP_TRACE_ALL if heap_trace_start() was never called).

Returns

- ESP_ERR_NOT_SUPPORTED Project was compiled without heap tracing enabled in menuconfig.
- ESP_ERR_INVALID_STATE Heap tracing was already started.
- ESP_OK Heap tracing resumed.

size_t **heap_trace_get_count**(void)

Return number of records in the heap trace buffer.

It is safe to call this function while heap tracing is running.

esp_err_t **heap_trace_get**(size_t index, *heap_trace_record_t* *record)

Return a raw record from the heap trace buffer.

Note: It is safe to call this function while heap tracing is running, however in HEAP_TRACE_LEAK mode record indexing may skip entries unless heap tracing is stopped first.

Parameters

- **index** –Index (zero-based) of the record to return.
- **record** –**[out]** Record where the heap trace record will be copied.

Returns

- ESP_ERR_NOT_SUPPORTED Project was compiled without heap tracing enabled in menuconfig.
- ESP_ERR_INVALID_STATE Heap tracing was not initialised.
- ESP_ERR_INVALID_ARG Index is out of bounds for current heap trace record count.
- ESP_OK Record returned successfully.

void **heap_trace_dump**(void)

Dump heap trace record data to stdout.

Note: It is safe to call this function while heap tracing is running, however in HEAP_TRACE_LEAK mode the dump may skip entries unless heap tracing is stopped first.

Structures

struct **heap_trace_record_t**

Trace record data type. Stores information about an allocated region of memory.

Public Members

uint32_t **ccount**

CCOUNT of the CPU when the allocation was made. LSB (bit value 1) is the CPU number (0 or 1).

void ***address**

Address which was allocated.

size_t **size**

Size of the allocation.

void ***alloced_by**[0]

Call stack of the caller which allocated the memory.

void ***freed_by**[0]

Call stack of the caller which freed the memory (all zero if not freed.)

Macros

CONFIG_HEAP_TRACING_STACK_DEPTH

Enumerations

enum **heap_trace_mode_t**

Values:

enumerator **HEAP_TRACE_ALL**

enumerator **HEAP_TRACE_LEAKS**

2.7.13 High Resolution Timer

Overview

Although FreeRTOS provides software timers, these timers have a few limitations:

- Maximum resolution is equal to RTOS tick period
- Timer callbacks are dispatched from a low-priority task

Hardware timers are free from both of the limitations, but often they are less convenient to use. For example, application components may need timer events to fire at certain times in the future, but the hardware timer only contains one "compare" value used for interrupt generation. This means that some facility needs to be built on top of the hardware timer to manage the list of pending events can dispatch the callbacks for these events as corresponding hardware interrupts happen.

An interrupt level of the handler depends on the *CONFIG_ESP_TIMER_INTERRUPT_LEVEL* option. It allows to set this: 1, 2 or 3 level (by default 1). Raising the level, the interrupt handler can reduce the timer processing delay.

`esp_timer` set of APIs provides one-shot and periodic timers, microsecond time resolution, and 64-bit range.

Internally, `esp_timer` uses a 64-bit hardware timer, where the implemention depends on *CONFIG_ESP_TIMER_IMPL*. Available options are:

- LAC timer
- (legacy) FRC2 timer

Note: The FRC2 is a legacy option for ESP32 until v4.2, a 32-bit hardware timer was used. Starting at v4.2, use the new LAC timer option instead, it has a simpler implementation, and has smaller run time overhead because software handling of timer overflow is not needed.

Timer callbacks can dispatched by two methods:

- `ESP_TIMER_TASK`
- `ESP_TIMER_ISR`. Available only if *CONFIG_ESP_TIMER_SUPPORTS_ISR_DISPATCH_METHOD* is enabled (by default disabled).

`ESP_TIMER_TASK`. Timer callbacks are dispatched from a high-priority `esp_timer` task. Because all the callbacks are dispatched from the same task, it is recommended to only do the minimal possible amount of work from the callback itself, posting an event to a lower priority task using a queue instead.

If other tasks with priority higher than `esp_timer` are running, callback dispatching will be delayed until `esp_timer` task has a chance to run. For example, this will happen if a SPI Flash operation is in progress.

`ESP_TIMER_ISR`. Timer callbacks are dispatched directly from the timer interrupt handler. This method is useful for some simple callbacks which aim for lower latency.

Creating and starting a timer, and dispatching the callback takes some time. Therefore there is a lower limit to the timeout value of one-shot `esp_timer`. If *esp_timer_start_once()* is called with a timeout value less than 20us, the callback will be dispatched only after approximately 20us.

Periodic `esp_timer` also imposes a 50us restriction on the minimal timer period. Periodic software timers with period of less than 50us are not practical since they would consume most of the CPU time. Consider using dedicated hardware peripherals or DMA features if you find that a timer with small period is required.

Using `esp_timer` APIs

Single timer is represented by *esp_timer_handle_t* type. Timer has a callback function associated with it. This callback function is called from the `esp_timer` task each time the timer elapses.

- To create a timer, call *esp_timer_create()*.
- To delete the timer when it is no longer needed, call *esp_timer_delete()*.

The timer can be started in one-shot mode or in periodic mode.

- To start the timer in one-shot mode, call *esp_timer_start_once()*, passing the time interval after which the callback should be called. When the callback gets called, the timer is considered to be stopped.
- To start the timer in periodic mode, call *esp_timer_start_periodic()*, passing the period with which the callback should be called. The timer keeps running until *esp_timer_stop()* is called.

Note that the timer must not be running when *esp_timer_start_once()* or *esp_timer_start_periodic()* is called. To restart a running timer, call *esp_timer_stop()* first, then call one of the start functions.

Callback functions

Timer callbacks which are processed by `ESP_TIMER_ISR` method should not call the context switch call - `portYIELD_FROM_ISR()`, instead of this you should use the `esp_timer_isr_dispatch_need_yield()` function. The context switch will be done after all ISR dispatch timers have been processed, if required by the system.

esp_timer during the light sleep

During light sleep, the esp_timer counter stops and no callback functions are called. Instead, the time is counted by the RTC counter. Upon waking up, the system gets the difference between the counters and calls a function that advances the esp_timer counter. Since the counter has been advanced, the system starts calling callbacks that were not called during sleep. The number of callbacks depends on the duration of the sleep and the period of the timers. It can lead to overflow of some queues. This only applies to periodic timers, one-shot timers will be called once.

This behavior can be changed by calling `esp_timer_stop()` before sleeping. In some cases, this can be inconvenient, and instead of the stop function, you can use the *skip_unhandled_events* option during `esp_timer_create()`. When the *skip_unhandled_events* is true, if a periodic timer expires one or more times during light sleep then only one callback is called on wake.

Using the *skip_unhandled_events* option with *automatic light sleep* (see *Power Management APIs*) helps to reduce the consumption of the system when it is in light sleep. The duration of light sleep is also determined by esp_timers. Timers with *skip_unhandled_events* option will not wake up the system.

Handling callbacks

esp_timer is designed to achieve a high-resolution low latency timer and the ability to handle delayed events. If the timer is late then the callback will be called as soon as possible, it will not be lost. In the worst case, when the timer has not been processed for more than one period (for periodic timers), in this case the callbacks will be called one after the other without waiting for the set period. This can be bad for some applications, and the *skip_unhandled_events* option was introduced to eliminate this behavior. If *skip_unhandled_events* is set then a periodic timer that has expired multiple times without being able to call the callback will still result in only one callback event once processing is possible.

Obtaining Current Time

`esp_timer` also provides a convenience function to obtain the time passed since start-up, with microsecond precision: `esp_timer_get_time()`. This function returns the number of microseconds since `esp_timer` was initialized, which usually happens shortly before `app_main` function is called.

Unlike *gettimeofday* function, values returned by `esp_timer_get_time()`:

- Start from zero after the chip wakes up from deep sleep
- Do not have timezone or DST adjustments applied

Application Example

The following example illustrates usage of `esp_timer` APIs: system/esp_timer.

API Reference

Header File

- components/esp_timer/include/esp_timer.h

Functions

esp_err_t **esp_timer_early_init** (void)

Minimal initialization of esp_timer.

This function can be called very early in startup process, after this call only esp_timer_get_time function can be used.

Note: This function is called from startup code. Applications do not need to call this function before using other esp_timer APIs.

Returns

- ESP_OK on success

esp_err_t **esp_timer_init** (void)

Initialize esp_timer library.

Note: This function is called from startup code. Applications do not need to call this function before using other esp_timer APIs. Before calling this function, esp_timer_early_init must be called by the startup code.

Returns

- ESP_OK on success
- ESP_ERR_NO_MEM if allocation has failed
- ESP_ERR_INVALID_STATE if already initialized
- other errors from interrupt allocator

esp_err_t **esp_timer_deinit** (void)

De-initialize esp_timer library.

Note: Normally this function should not be called from applications

Returns

- ESP_OK on success
- ESP_ERR_INVALID_STATE if not yet initialized

esp_err_t **esp_timer_create** (const *esp_timer_create_args_t* *create_args, *esp_timer_handle_t* *out_handle)

Create an esp_timer instance.

Note: When done using the timer, delete it with esp_timer_delete function.

Parameters

- **create_args** –Pointer to a structure with timer creation arguments. Not saved by the library, can be allocated on the stack.
- **out_handle** –**[out]** Output, pointer to esp_timer_handle_t variable which will hold the created timer handle.

Returns

- ESP_OK on success
- ESP_ERR_INVALID_ARG if some of the create_args are not valid
- ESP_ERR_INVALID_STATE if esp_timer library is not initialized yet
- ESP_ERR_NO_MEM if memory allocation fails

esp_err_t **esp_timer_start_once** (*esp_timer_handle_t* timer, uint64_t timeout_us)

Start one-shot timer.

Timer should not be running when this function is called.

Parameters

- **timer** –timer handle created using esp_timer_create
- **timeout_us** –timer timeout, in microseconds relative to the current moment

Returns

- ESP_OK on success
- ESP_ERR_INVALID_ARG if the handle is invalid
- ESP_ERR_INVALID_STATE if the timer is already running

esp_err_t **esp_timer_start_periodic**(*esp_timer_handle_t* timer, uint64_t period)

Start a periodic timer.

Timer should not be running when this function is called. This function will start the timer which will trigger every 'period' microseconds.

Parameters
- **timer** –timer handle created using esp_timer_create
- **period** –timer period, in microseconds

Returns
- ESP_OK on success
- ESP_ERR_INVALID_ARG if the handle is invalid
- ESP_ERR_INVALID_STATE if the timer is already running

esp_err_t **esp_timer_stop**(*esp_timer_handle_t* timer)

Stop the timer.

This function stops the timer previously started using esp_timer_start_once or esp_timer_start_periodic.

Parameters **timer** –timer handle created using esp_timer_create

Returns
- ESP_OK on success
- ESP_ERR_INVALID_STATE if the timer is not running

esp_err_t **esp_timer_delete**(*esp_timer_handle_t* timer)

Delete an esp_timer instance.

The timer must be stopped before deleting. A one-shot timer which has expired does not need to be stopped.

Parameters **timer** –timer handle allocated using esp_timer_create

Returns
- ESP_OK on success
- ESP_ERR_INVALID_STATE if the timer is running

int64_t **esp_timer_get_time**(void)

Get time in microseconds since boot.

Returns number of microseconds since underlying timer has been started

int64_t **esp_timer_get_next_alarm**(void)

Get the timestamp when the next timeout is expected to occur.

Returns Timestamp of the nearest timer event, in microseconds. The timebase is the same as for the values returned by esp_timer_get_time.

int64_t **esp_timer_get_next_alarm_for_wake_up**(void)

Get the timestamp when the next timeout is expected to occur skipping those which have skip_unhandled_events flag.

Returns Timestamp of the nearest timer event, in microseconds. The timebase is the same as for the values returned by esp_timer_get_time.

esp_err_t **esp_timer_dump**(FILE *stream)

Dump the list of timers to a stream.

If CONFIG_ESP_TIMER_PROFILING option is enabled, this prints the list of all the existing timers. Otherwise, only the list active timers is printed.

The format is:

name period alarm times_armed times_triggered total_callback_run_time

where:

name —timer name (if CONFIG_ESP_TIMER_PROFILING is defined), or timer pointer period —period of timer, in microseconds, or 0 for one-shot timer alarm - time of the next alarm, in microseconds since boot, or 0 if the timer is not started

The following fields are printed if CONFIG_ESP_TIMER_PROFILING is defined:

times_armed —number of times the timer was armed via esp_timer_start_X times_triggered - number of times the callback was called total_callback_run_time - total time taken by callback to execute, across all calls

Parameters **`stream`** –stream (such as stdout) to dump the information to
Returns
- ESP_OK on success
- ESP_ERR_NO_MEM if can not allocate temporary buffer for the output

bool **`esp_timer_is_active`**(*esp_timer_handle_t* timer)

Returns status of a timer, active or not.

This function is used to identify if the timer is still active or not.

Parameters **`timer`** –timer handle created using esp_timer_create
Returns
- 1 if timer is still active
- 0 if timer is not active.

Structures

struct **`esp_timer_create_args_t`**

Timer configuration passed to esp_timer_create.

Public Members

esp_timer_cb_t **`callback`**

Function to call when timer expires.

void ***`arg`**

Argument to pass to the callback.

esp_timer_dispatch_t **`dispatch_method`**

Call the callback from task or from ISR.

const char ***`name`**

Timer name, used in esp_timer_dump function.

bool **`skip_unhandled_events`**

Skip unhandled events for periodic timers.

Type Definitions

typedef struct esp_timer ***`esp_timer_handle_t`**

Opaque type representing a single esp_timer.

typedef void (***`esp_timer_cb_t`**)(void *arg)

Timer callback function type.

Param arg pointer to opaque user-specific data

Enumerations

enum **esp_timer_dispatch_t**

Method for dispatching timer callback.

Values:

enumerator **ESP_TIMER_TASK**

Callback is called from timer task.

enumerator **ESP_TIMER_MAX**

Count of the methods for dispatching timer callback.

2.7.14 The himem allocation API

Overview

The ESP32 can access external SPI RAM transparently, so you can use it as normal memory in your program code. However, because the address space for external memory is limited in size, only the first 4MiB can be used as such. Access to the remaining memory is still possible, however this needs to go through a bankswitching scheme controlled by the himem API.

Specifically, what is implemented by the himem API is a bankswitching scheme. Hardware-wise, the 4MiB region for external SPI RAM is mapped into the CPU address space by a MMU, which maps a configurable 32K bank/page of external SPI RAM into each of the 32K pages in the 4MiB region accessed by the CPU. For external memories that are <=4MiB, this MMU is configured to unity mapping, effectively mapping each CPU address 1-to-1 to the external SPI RAM address.

In order to use the himem API, you have to enable it in the menuconfig using `CONFIG_SPIRAM_BANKSWITCH_ENABLE`, as well as set the amount of banks reserved for this in `CONFIG_SPIRAM_BANKSWITCH_RESERVE`. This decreases the amount of external memory allocated by functions like `malloc()`, but it allows you to use the himem api to map any of the remaining memory into the reserved banks.

The himem API is more-or-less an abstraction of the bankswitching scheme: it allows you to claim one or more banks of address space (called 'regions' in the API) as well as one or more of banks of memory to map into the ranges.

Example

An example doing a simple memory test of the high memory range is available in esp-idf: system/himem

API Reference

Header File

- components/esp_hw_support/include/soc/esp32/himem.h

Functions

esp_err_t **esp_himem_alloc**(size_t size, *esp_himem_handle_t* *handle_out)

Allocate a block in high memory.

Parameters

- **size** –Size of the to-be-allocated block, in bytes. Note that this needs to be a multiple of the external RAM mmu block size (32K).
- **handle_out** –**[out]** Handle to be returned

Returns - ESP_OK if succesful

- ESP_ERR_NO_MEM if out of memory

- ESP_ERR_INVALID_SIZE if size is not a multiple of 32K

esp_err_t **esp_himem_alloc_map_range**(size_t size, *esp_himem_rangehandle_t* *handle_out)

Allocate a memory region to map blocks into.

This allocates a contiguous CPU memory region that can be used to map blocks of physical memory into.

Parameters
- **size** –Size of the range to be allocated. Note this needs to be a multiple of the external RAM mmu block size (32K).
- **handle_out** –**[out]** Handle to be returned

Returns - ESP_OK if succesful
- ESP_ERR_NO_MEM if out of memory or address space
- ESP_ERR_INVALID_SIZE if size is not a multiple of 32K

esp_err_t **esp_himem_map**(*esp_himem_handle_t* handle, *esp_himem_rangehandle_t* range, size_t ram_offset, size_t range_offset, size_t len, int flags, void **out_ptr)

Map a block of high memory into the CPUs address space.

This effectively makes the block available for read/write operations.

Note: The region to be mapped needs to have offsets and sizes that are aligned to the SPI RAM MMU block size (32K)

Parameters
- **handle** –Handle to the block of memory, as given by esp_himem_alloc
- **range** –Range handle to map the memory in
- **ram_offset** –Offset into the block of physical memory of the block to map
- **range_offset** –Offset into the address range where the block will be mapped
- **len** –Length of region to map
- **flags** –One of ESP_HIMEM_MAPFLAG_*
- **out_ptr** –**[out]** Pointer to variable to store resulting memory pointer in

Returns - ESP_OK if the memory could be mapped
- ESP_ERR_INVALID_ARG if offset, range or len aren't MMU-block-aligned (32K)
- ESP_ERR_INVALID_SIZE if the offsets/lengths don't fit in the allocated memory or range
- ESP_ERR_INVALID_STATE if a block in the selected ram offset/length is already mapped, or if a block in the selected range offset/length already has a mapping.

esp_err_t **esp_himem_free**(*esp_himem_handle_t* handle)

Free a block of physical memory.

This clears out the associated handle making the memory available for re-allocation again. This will only succeed if none of the memory blocks currently have a mapping.

Parameters **handle** –Handle to the block of memory, as given by esp_himem_alloc
Returns - ESP_OK if the memory is succesfully freed
- ESP_ERR_INVALID_ARG if the handle still is (partially) mapped

esp_err_t **esp_himem_free_map_range**(*esp_himem_rangehandle_t* handle)

Free a mapping range.

This clears out the associated handle making the range available for re-allocation again. This will only succeed if none of the range blocks currently are used for a mapping.

Parameters **handle** –Handle to the range block, as given by esp_himem_alloc_map_range
Returns - ESP_OK if the memory is succesfully freed
- ESP_ERR_INVALID_ARG if the handle still is (partially) mapped to

esp_err_t **esp_himem_unmap**(*esp_himem_rangehandle_t* range, void *ptr, size_t len)

Unmap a region.

Parameters
- **range** –Range handle
- **ptr** –Pointer returned by esp_himem_map
- **len** –Length of the block to be unmapped. Must be aligned to the SPI RAM MMU blocksize (32K)

Returns - ESP_OK if the memory is succesfully unmapped,
- ESP_ERR_INVALID_ARG if ptr or len are invalid.

size_t **esp_himem_get_phys_size**(void)

Get total amount of memory under control of himem API.

Returns Amount of memory, in bytes

size_t **esp_himem_get_free_size**(void)

Get free amount of memory under control of himem API.

Returns Amount of free memory, in bytes

size_t **esp_himem_reserved_area_size**(void)

Get amount of SPI memory address space needed for bankswitching.

Note: This is also weakly defined in esp32/spiram.c and returns 0 there, so if no other function in this file is used, no memory is reserved.

Returns Amount of reserved area, in bytes

Macros

ESP_HIMEM_BLKSZ

ESP_HIMEM_MAPFLAG_RO

Indicates that a mapping will only be read from. Note that this is unused for now.

Type Definitions

typedef struct esp_himem_ramdata_t ***esp_himem_handle_t**

typedef struct esp_himem_rangedata_t ***esp_himem_rangehandle_t**

2.7.15 Inter-Processor Call

Note: The IPC is an **Inter-Processor Call** and **NOT Inter-Process Communication** as found on other operating systems.

Overview

Due to the dual core nature of the ESP32, there are instances where a certain callback must be run in the context of a particular CPU such as:

- When allocating an ISR to an interrupt source of a particular CPU (applies to freeing a particular CPU's interrupt source as well).
- On particular chips (such as the ESP32), accessing memory that is exclusive to a particular CPU (such as RTC Fast Memory).
- Reading the registers/state of another CPU.

The IPC (Inter-Processor Call) feature allows a particular CPU (the calling CPU) to trigger the execution of a callback function on another CPU (the target CPU). The IPC feature allows execution of a callback function on the target CPU in either a task context, or a High Priority Interrupt context (see *High-Level Interrupts* for more details). Depending on the context that the callback function is executed in, different restrictions apply to the implementation of the callback function.

IPC in Task Context

The IPC feature implements callback execution in a task context by creating an IPC task for each CPU during application startup. When the calling CPU needs to execute a callback on the target CPU, the callback will execute in the context of the target CPU's IPC task.

When using IPCs in a task context, users need to consider the following:

- IPC callbacks should ideally be simple and short. **An IPC callback should avoid attempting to block or yield**.
- The IPC tasks are created at the highest possible priority (i.e., `configMAX_PRIORITIES - 1`) thus the callback should also run at that priority as a result. However, *CONFIG_ESP_IPC_USES_CALLERS_PRIORITY* is enabled by default which will temporarily lower the priority of the target CPU's IPC task to the calling CPU before executing the callback.
- Depending on the complexity of the callback, users may need to configure the stack size of the IPC task via *CONFIG_ESP_IPC_TASK_STACK_SIZE*.
- The IPC feature is internally protected by a mutex. Therefore, simultaneous IPC calls from two or more calling CPUs will be handled on a first come first serve basis.

API Usage Task Context IPC callbacks have the following restrictions:

- The callback must be of type `void func(void *arg)`
- The callback should avoid attempting to block or yield as this will result in the target CPU's IPC task blocking or yielding.
- The callback must avoid changing any aspect of the IPC task (e.g., by calling `vTaskPrioritySet(NULL, x)`).

The IPC feature offers the API listed below to execute a callback in a task context on a target CPU. The API allows the calling CPU to block until the callback's execution has completed, or return immediately once the callback's execution has started.

- *`esp_ipc_call()`* will trigger an IPC call on the target CPU. This function will block until the target CPU's IPC task **begins** execution of the callback.
- *`esp_ipc_call_blocking()`* will trigger an IPC on the target CPU. This function will block until the target CPU's IPC task **completes** execution of the callback.

IPC in ISR Context

In some cases, we need to quickly obtain the state of another CPU such as in a core dump, GDB stub, various unit tests, and DPORT workaround. For such scenarios, the IPC feature supports execution of callbacks in a *High Priority Interrupt* context. The IPC feature implements the High Priority Interrupt context by reserving a High Priority Interrupt on each CPU for IPC usage. When a calling CPU needs to execute a callback on the target CPU, the callback will execute in the context of the High Priority Interrupt of the target CPU.

When using IPCs in High Priority Interrupt context, users need to consider the following:

- Since the callback is executed in a High Priority Interrupt context, the callback must be written entirely in assembly. See the API Usage below for more details regarding writing assembly callbacks.
- The priority of the reserved High Priority Interrupt is dependent on the *CONFIG_ESP_SYSTEM_CHECK_INT_LEVEL* option
- **When the callback executes:**
  - The calling CPU will disable interrupts of level 3 and lower

  - Although the priority of the reserved interrupt depends on *CONFIG_ESP_SYSTEM_CHECK_INT_LEVEL*, during the execution IPC ISR callback, the target CPU will disable interrupts of level 5 and lower regardless of what *CONFIG_ESP_SYSTEM_CHECK_INT_LEVEL* is set to.

API Usage High Priority Interrupt IPC callbacks have the following restrictions:

- The callback must be of type `void func(void *arg)` but implemented entirely in assembly
- **The callback is invoked via the `CALLX0` instruction with register windowing disabled, thus the callback:**
  - Must not call any register window related instructions (e.g., `entry` and `retw`).
  - Must not call other C functions as register windowing is disabled
- The callback should be placed in IRAM at a 4-byte aligned address
- **(On invocation of/after returning from) the callback, the registers `a2, a3, a4` are (saved/restored) automatically thu**
  - `a2` will contain the `void *arg` of the callback
  - `a3/a4` are free to use as scratch registers

The IPC feature offers the API listed below to execute a callback in a High Priority Interrupt context.

- *`esp_ipc_isr_asm_call()`* will trigger an IPC call on the target CPU. This function will busy-wait until the target CPU begins execution of the callback.
- *`esp_ipc_isr_asm_call_blocking()`* will trigger an IPC call on the target CPU. This function will busy-wait until the target CPU completes execution of the callback.

The following code-blocks demonstrates a High Priority Interrupt IPC callback written in assembly that simply reads the target CPU's cycle count.

```
/* esp_test_ipc_isr_get_cycle_count_other_cpu(void *arg) */
// this function reads CCOUNT of the target CPU and stores it in arg.
// use only a2, a3 and a4 regs here.
.section    .iram1, "ax"
.align      4
.global     esp_test_ipc_isr_get_cycle_count_other_cpu
.type       esp_test_ipc_isr_get_cycle_count_other_cpu, @function
// Args:
// a2 - void* arg
esp_test_ipc_isr_get_cycle_count_other_cpu:
rsr.ccount a3
s32i    a3, a2, 0
ret
```

```
unit32_t cycle_count;
esp_ipc_isr_asm_call_blocking(esp_test_ipc_isr_get_cycle_count_other_cpu, (void␣
↪*)cycle_count);
```

Note: The number of scratch registers available for use is sufficient for most simple use cases. But if your callback requires more scratch registers, `void *arg` can point to a buffer that is used as a register save area. The callback can then save and restore more registers. See the system/ipc/ipc_isr.

Note: For more examples of High Priority Interrupt IPC callbacks, see components/esp_ipc/src/esp_ipc_isr/esp_ipc_isr_routines.S and :*components/esp_system/test/test_ipc_isr.S*

The High Priority Interrupt IPC API also provides the following convenience functions that can stall/resume the target CPU. These API utilize the High Priority Interrupt IPC, but supply their own internal callbacks:

- *`esp_ipc_isr_stall_other_cpu()`* stalls the target CPU. The calling CPU disables interrupts of level 3 and lower while the target CPU will busy-wait with interrupts of level 5 and lower disabled. The target CPU

will busy-wait until *esp_ipc_isr_release_other_cpu()* is called.
- *esp_ipc_isr_release_other_cpu()* resumes the target CPU.

API Reference

Header File

- components/esp_ipc/include/esp_ipc.h

Functions

esp_err_t **esp_ipc_call**(uint32_t cpu_id, *esp_ipc_func_t* func, void *arg)

Execute a callback on a given CPU.

Execute a given callback on a particular CPU. The callback must be of type "esp_ipc_func_t" and will be invoked in the context of the target CPU's IPC task.

- This function will block the target CPU's IPC task has begun execution of the callback
- If another IPC call is ongoing, this function will block until the ongoing IPC call completes
- The stack size of the IPC task can be configured via the CONFIG_ESP_IPC_TASK_STACK_SIZE option

---

Note: In single-core mode, returns ESP_ERR_INVALID_ARG for cpu_id 1.

Parameters
- **cpu_id** –**[in]** CPU where the given function should be executed (0 or 1)
- **func** –**[in]** Pointer to a function of type void func(void* arg) to be executed
- **arg** –**[in]** Arbitrary argument of type void* to be passed into the function

Returns
- ESP_ERR_INVALID_ARG if cpu_id is invalid
- ESP_ERR_INVALID_STATE if the FreeRTOS scheduler is not running
- ESP_OK otherwise

esp_err_t **esp_ipc_call_blocking**(uint32_t cpu_id, *esp_ipc_func_t* func, void *arg)

Execute a callback on a given CPU until and block until it completes.

This function is identical to esp_ipc_call() except that this function will block until the execution of the callback completes.

Note: In single-core mode, returns ESP_ERR_INVALID_ARG for cpu_id 1.

Parameters
- **cpu_id** –**[in]** CPU where the given function should be executed (0 or 1)
- **func** –**[in]** Pointer to a function of type void func(void* arg) to be executed
- **arg** –**[in]** Arbitrary argument of type void* to be passed into the function

Returns
- ESP_ERR_INVALID_ARG if cpu_id is invalid
- ESP_ERR_INVALID_STATE if the FreeRTOS scheduler is not running
- ESP_OK otherwise

Type Definitions

typedef void (*`esp_ipc_func_t`)(void *arg)

IPC Callback.

A callback of this type should be provided as an argument when calling esp_ipc_call() or esp_ipc_call_blocking().

Header File

- components/esp_ipc/include/esp_ipc_isr.h

Functions

void `esp_ipc_isr_asm_call` (*esp_ipc_isr_func_t* func, void *arg)

Execute an assembly callback on the other CPU.

Execute a given callback on the other CPU in the context of a High Priority Interrupt.

- This function will busy-wait in a critical section until the other CPU has started execution of the callback
- The callback must be written in assembly, is invoked using a CALLX0 instruction, and has a2, a3, a4 as scratch registers. See docs for more details

Note: This function is not available in single-core mode.

Parameters

- `func` –**[in]** Pointer to a function of type void func(void* arg) to be executed
- `arg` –**[in]** Arbitrary argument of type void* to be passed into the function

void `esp_ipc_isr_asm_call_blocking` (*esp_ipc_isr_func_t* func, void *arg)

Execute an assembly callback on the other CPU and busy-wait until it completes.

This function is identical to esp_ipc_isr_asm_call() except that this function will busy-wait until the execution of the callback completes.

Note: This function is not available in single-core mode.

Parameters

- `func` –**[in]** Pointer to a function of type void func(void* arg) to be executed
- `arg` –**[in]** Arbitrary argument of type void* to be passed into the function

void `esp_ipc_isr_stall_other_cpu` (void)

Stall the other CPU.

This function will stall the other CPU. The other CPU is stalled by busy-waiting in the context of a High Priority Interrupt. The other CPU will not be resumed until esp_ipc_isr_release_other_cpu() is called.

- This function is internally implemented using IPC ISR
- This function is used for DPORT workaround.
- If the stall feature is paused using esp_ipc_isr_stall_pause(), this function will have no effect

Note: This function is not available in single-core mode.

Note: It is the caller's responsibility to avoid deadlocking on spinlocks

void **esp_ipc_isr_release_other_cpu**(void)

Release the other CPU.

This function will release the other CPU that was previously stalled from calling esp_ipc_isr_stall_other_cpu()

- This function is used for DPORT workaround.
- If the stall feature is paused using esp_ipc_isr_stall_pause(), this function will have no effect

Note: This function is not available in single-core mode.

void **esp_ipc_isr_stall_pause**(void)

Puase the CPU stall feature.

This function will pause the CPU stall feature. Once paused, calls to esp_ipc_isr_stall_other_cpu() and esp_ipc_isr_release_other_cpu() will have no effect. If a IPC ISR call is already in progress, this function will busy-wait until the call completes before pausing the CPU stall feature.

void **esp_ipc_isr_stall_abort**(void)

Abort a CPU stall.

This function will abort any stalling routine of the other CPU due to a pervious call to esp_ipc_isr_stall_other_cpu(). This function aborts the stall in a non-recoverable manner, thus should only be called in case of a panic().

- This function is used in panic handling code

void **esp_ipc_isr_stall_resume**(void)

Resume the CPU stall feature.

This function will resume the CPU stall feature that was previously paused by calling esp_ipc_isr_stall_pause(). Once resumed, calls to esp_ipc_isr_stall_other_cpu() and esp_ipc_isr_release_other_cpu() will have effect again.

Type Definitions

typedef void (***esp_ipc_isr_func_t**)(void *arg)

IPC ISR Callback.

A callback of this type should be provided as an argument when calling esp_ipc_isr_asm_call() or esp_ipc_isr_asm_call_blocking().

2.7.16 Call function with external stack

Overview

A given function can be executed with a user allocated stack space which is independent of current task stack, this mechanism can be used to save stack space wasted by tasks which call a common function with intensive stack usage such as *printf*. The given function can be called inside the shared stack space which is a callback function deferred by calling `esp_execute_shared_stack_function()`, passing that function as parameter

Usage

esp_execute_shared_stack_function() takes four arguments, a mutex object allocated by the caller, which is used to protect if the same function shares its allocated stack, a pointer to the top of stack used to that fuction, the size in bytes of stack and, a pointer to a user function where the shared stack space will reside, after calling the function, the user defined function will be deferred as a callback where functions can be called using the user allocated space without taking space from current task stack.

The usage may looks like the code below:

```
void external_stack_function(void)
{
    printf("Executing this printf from external stack! \n");
}

//Let's suppose we wanting to call printf using a separated stack space
//allowing app to reduce its stack size.
void app_main()
{
    //Allocate a stack buffer, from heap or as a static form:
    portSTACK_TYPE *shared_stack = malloc(8192 * sizeof(portSTACK_TYPE));
    assert(shared_stack != NULL);

    //Allocate a mutex to protect its usage:
    SemaphoreHandle_t printf_lock = xSemaphoreCreateMutex();
    assert(printf_lock != NULL);

    //Call the desired function using the macro helper:
    esp_execute_shared_stack_function(printf_lock,
                                      shared_stack,
                                      8192,
                                      external_stack_function);

    vSemaphoreDelete(printf_lock);
    free(shared_stack);
}
```

API Reference

Header File

- components/esp_system/include/esp_expression_with_stack.h

Functions

void **esp_execute_shared_stack_function**(*SemaphoreHandle_t* lock, void *stack, size_t stack_size, *shared_stack_function* function)

Calls user defined shared stack space function.

Note: if either lock, stack or stack size is invalid, the expression will be called using the current stack.

Parameters

- **lock** –Mutex object to protect in case of shared stack
- **stack** –Pointer to user alocated stack
- **stack_size** –Size of current stack in bytes
- **function** –pointer to the shared stack function to be executed

Macros

ESP_EXECUTE_EXPRESSION_WITH_STACK(lock, stack, stack_size, expression)

Type Definitions

typedef void (***shared_stack_function**)(void)

2.7.17 Interrupt allocation

Overview

The ESP32 has two cores, with 32 interrupts each. Each interrupt has a certain priority level, most (but not all) interrupts are connected to the interrupt mux.

Because there are more interrupt sources than interrupts, sometimes it makes sense to share an interrupt in multiple drivers. The *esp_intr_alloc()* abstraction exists to hide all these implementation details.

A driver can allocate an interrupt for a certain peripheral by calling *esp_intr_alloc()* (or *esp_intr_alloc_intrstatus()*). It can use the flags passed to this function to set the type of interrupt allocated, specifying a particular level or trigger method. The interrupt allocation code will then find an applicable interrupt, use the interrupt mux to hook it up to the peripheral, and install the given interrupt handler and ISR to it.

This code presents two different types of interrupts, handled differently: shared interrupts and non-shared interrupts. The simplest ones are non-shared interrupts: a separate interrupt is allocated per *esp_intr_alloc()* call and this interrupt is solely used for the peripheral attached to it, with only one ISR that will get called. On the other hand, shared interrupts can have multiple peripherals triggering them, with multiple ISRs being called when one of the peripherals attached signals an interrupt. Thus, ISRs that are intended for shared interrupts should check the interrupt status of the peripheral they service in order to check if any action is required.

Non-shared interrupts can be either level- or edge-triggered. Shared interrupts can only be level interrupts due to the chance of missed interrupts when edge interrupts are used.

For example, let's say DevA and DevB share an interrupt. DevB signals an interrupt, so INT line goes high. The ISR handler calls code for DevA but does nothing. Then, ISR handler calls code for DevB, but while doing that, DevA signals an interrupt. DevB's ISR is done, it clears interrupt status for DevB and exits interrupt code. Now, an interrupt for DevA is still pending, but because the INT line never went low, as DevA kept it high even when the interrupt for DevB was cleared, the interrupt is never serviced.

Multicore issues

Peripherals that can generate interrupts can be divided in two types:

- External peripherals, within the ESP32 but outside the Xtensa cores themselves. Most ESP32 peripherals are of this type.
- Internal peripherals, part of the Xtensa CPU cores themselves.

Interrupt handling differs slightly between these two types of peripherals.

Internal peripheral interrupts Each Xtensa CPU core has its own set of six internal peripherals:

- Three timer comparators
- A performance monitor
- Two software interrupts.

Internal interrupt sources are defined in esp_intr_alloc.h as `ETS_INTERNAL_*_INTR_SOURCE`.

These peripherals can only be configured from the core they are associated with. When generating an interrupt, the interrupt they generate is hard-wired to their associated core; it's not possible to have, for example, an internal timer comparator of one core generate an interrupt on another core. That is why these sources can only be managed using

a task running on that specific core. Internal interrupt sources are still allocatable using `esp_intr_alloc()` as normal, but they cannot be shared and will always have a fixed interrupt level (namely, the one associated in hardware with the peripheral).

External Peripheral Interrupts The remaining interrupt sources are from external peripherals. These are defined in soc/soc.h as `ETS_*_INTR_SOURCE`.

Non-internal interrupt slots in both CPU cores are wired to an interrupt multiplexer, which can be used to route any external interrupt source to any of these interrupt slots.

- Allocating an external interrupt will always allocate it on the core that does the allocation.
- Freeing an external interrupt must always happen on the same core it was allocated on.
- Disabling and enabling external interrupts from another core is allowed.
- Multiple external interrupt sources can share an interrupt slot by passing `ESP_INTR_FLAG_SHARED` as a flag to `esp_intr_alloc()`.

Care should be taken when calling `esp_intr_alloc()` from a task which is not pinned to a core. During task switching, these tasks can migrate between cores. Therefore it is impossible to tell which CPU the interrupt is allocated on, which makes it difficult to free the interrupt handle and may also cause debugging difficulties. It is advised to use `xTaskCreatePinnedToCore()` with a specific CoreID argument to create tasks that will allocate interrupts. In the case of internal interrupt sources, this is required.

IRAM-Safe Interrupt Handlers

The `ESP_INTR_FLAG_IRAM` flag registers an interrupt handler that always runs from IRAM (and reads all its data from DRAM), and therefore does not need to be disabled during flash erase and write operations.

This is useful for interrupts which need a guaranteed minimum execution latency, as flash write and erase operations can be slow (erases can take tens or hundreds of milliseconds to complete).

It can also be useful to keep an interrupt handler in IRAM if it is called very frequently, to avoid flash cache misses.

Refer to the *SPI flash API documentation* for more details.

Multiple Handlers Sharing A Source

Several handlers can be assigned to a same source, given that all handlers are allocated using the `ESP_INTR_FLAG_SHARED` flag. They will all be allocated to the interrupt, which the source is attached to, and called sequentially when the source is active. The handlers can be disabled and freed individually. The source is attached to the interrupt (enabled), if one or more handlers are enabled, otherwise detached. A handler will never be called when disabled, while **its source may still be triggered** if any one of its handler enabled.

Sources attached to non-shared interrupt do not support this feature.

Though the framework support this feature, you have to use it *very carefully*. There usually exist two ways to stop an interrupt from being triggered: *disable the source* or *mask peripheral interrupt status*. IDF only handles enabling and disabling of the source itself, leaving status and mask bits to be handled by users. **Status bits shall either be masked before the handler responsible for it is disabled, either be masked and then properly handled in another enabled interrupt**. Please note that leaving some status bits unhandled without masking them, while disabling the handlers for them, will cause the interrupt(s) to be triggered indefinitely, resulting therefore in a system crash.

API Reference

Header File

- components/esp_hw_support/include/esp_intr_alloc.h

Functions

esp_err_t **esp_intr_mark_shared**(int intno, int cpu, bool is_in_iram)

Mark an interrupt as a shared interrupt.

This will mark a certain interrupt on the specified CPU as an interrupt that can be used to hook shared interrupt handlers to.

Parameters
- **intno** –The number of the interrupt (0-31)
- **cpu** –CPU on which the interrupt should be marked as shared (0 or 1)
- **is_in_iram** –Shared interrupt is for handlers that reside in IRAM and the int can be left enabled while the flash cache is disabled.

Returns ESP_ERR_INVALID_ARG if cpu or intno is invalid ESP_OK otherwise

esp_err_t **esp_intr_reserve**(int intno, int cpu)

Reserve an interrupt to be used outside of this framework.

This will mark a certain interrupt on the specified CPU as reserved, not to be allocated for any reason.

Parameters
- **intno** –The number of the interrupt (0-31)
- **cpu** –CPU on which the interrupt should be marked as shared (0 or 1)

Returns ESP_ERR_INVALID_ARG if cpu or intno is invalid ESP_OK otherwise

esp_err_t **esp_intr_alloc**(int source, int flags, *intr_handler_t* handler, void *arg, *intr_handle_t* *ret_handle)

Allocate an interrupt with the given parameters.

This finds an interrupt that matches the restrictions as given in the flags parameter, maps the given interrupt source to it and hooks up the given interrupt handler (with optional argument) as well. If needed, it can return a handle for the interrupt as well.

The interrupt will always be allocated on the core that runs this function.

If ESP_INTR_FLAG_IRAM flag is used, and handler address is not in IRAM or RTC_FAST_MEM, then ESP_ERR_INVALID_ARG is returned.

Parameters
- **source** –The interrupt source. One of the ETS_*_INTR_SOURCE interrupt mux sources, as defined in soc/soc.h, or one of the internal ETS_INTERNAL_*_INTR_SOURCE sources as defined in this header.
- **flags** –An ORred mask of the ESP_INTR_FLAG_* defines. These restrict the choice of interrupts that this routine can choose from. If this value is 0, it will default to allocating a non-shared interrupt of level 1, 2 or 3. If this is ESP_INTR_FLAG_SHARED, it will allocate a shared interrupt of level 1. Setting ESP_INTR_FLAG_INTRDISABLED will return from this function with the interrupt disabled.
- **handler** –The interrupt handler. Must be NULL when an interrupt of level >3 is requested, because these types of interrupts aren't C-callable.
- **arg** –Optional argument for passed to the interrupt handler
- **ret_handle** –Pointer to an intr_handle_t to store a handle that can later be used to request details or free the interrupt. Can be NULL if no handle is required.

Returns ESP_ERR_INVALID_ARG if the combination of arguments is invalid. ESP_ERR_NOT_FOUND No free interrupt found with the specified flags ESP_OK otherwise

esp_err_t **esp_intr_alloc_intrstatus**(int source, int flags, uint32_t intrstatusreg, uint32_t intrstatusmask, *intr_handler_t* handler, void *arg, *intr_handle_t* *ret_handle)

Allocate an interrupt with the given parameters.

This essentially does the same as esp_intr_alloc, but allows specifying a register and mask combo. For shared interrupts, the handler is only called if a read from the specified register, ANDed with the mask, returns non-zero. By passing an interrupt status register address and a fitting mask, this can be used to accelerate interrupt handling in the case a shared interrupt is triggered; by checking the interrupt statuses first, the code can decide which ISRs can be skipped

Parameters

- **source** –The interrupt source. One of the ETS_*_INTR_SOURCE interrupt mux sources, as defined in soc/soc.h, or one of the internal ETS_INTERNAL_*_INTR_SOURCE sources as defined in this header.
- **flags** –An ORred mask of the ESP_INTR_FLAG_* defines. These restrict the choice of interrupts that this routine can choose from. If this value is 0, it will default to allocating a non-shared interrupt of level 1, 2 or 3. If this is ESP_INTR_FLAG_SHARED, it will allocate a shared interrupt of level 1. Setting ESP_INTR_FLAG_INTRDISABLED will return from this function with the interrupt disabled.
- **intrstatusreg** –The address of an interrupt status register
- **intrstatusmask** –A mask. If a read of address intrstatusreg has any of the bits that are 1 in the mask set, the ISR will be called. If not, it will be skipped.
- **handler** –The interrupt handler. Must be NULL when an interrupt of level >3 is requested, because these types of interrupts aren't C-callable.
- **arg** –Optional argument for passed to the interrupt handler
- **ret_handle** –Pointer to an intr_handle_t to store a handle that can later be used to request details or free the interrupt. Can be NULL if no handle is required.

Returns ESP_ERR_INVALID_ARG if the combination of arguments is invalid. ESP_ERR_NOT_FOUND No free interrupt found with the specified flags ESP_OK otherwise

esp_err_t **esp_intr_free**(*intr_handle_t* handle)

Disable and free an interrupt.

Use an interrupt handle to disable the interrupt and release the resources associated with it. If the current core is not the core that registered this interrupt, this routine will be assigned to the core that allocated this interrupt, blocking and waiting until the resource is successfully released.

Note: When the handler shares its source with other handlers, the interrupt status bits it's responsible for should be managed properly before freeing it. see `esp_intr_disable` for more details. Please do not call this function in `esp_ipc_call_blocking`.

Parameters **handle** –The handle, as obtained by esp_intr_alloc or esp_intr_alloc_intrstatus

Returns ESP_ERR_INVALID_ARG the handle is NULL ESP_FAIL failed to release this handle ESP_OK otherwise

int **esp_intr_get_cpu**(*intr_handle_t* handle)

Get CPU number an interrupt is tied to.

Parameters **handle** –The handle, as obtained by esp_intr_alloc or esp_intr_alloc_intrstatus

Returns The core number where the interrupt is allocated

int **esp_intr_get_intno**(*intr_handle_t* handle)

Get the allocated interrupt for a certain handle.

Parameters **handle** –The handle, as obtained by esp_intr_alloc or esp_intr_alloc_intrstatus

Returns The interrupt number

esp_err_t **esp_intr_disable**(*intr_handle_t* handle)

Disable the interrupt associated with the handle.

Note:

a. For local interrupts (ESP_INTERNAL_* sources), this function has to be called on the CPU the interrupt is allocated on. Other interrupts have no such restriction.
b. When several handlers sharing a same interrupt source, interrupt status bits, which are handled in the handler to be disabled, should be masked before the disabling, or handled in other enabled interrupts properly. Miss of interrupt status handling will cause infinite interrupt calls and finally system crash.

Parameters **handle** –The handle, as obtained by esp_intr_alloc or esp_intr_alloc_intrstatus
Returns ESP_ERR_INVALID_ARG if the combination of arguments is invalid. ESP_OK otherwise

esp_err_t **esp_intr_enable**(*intr_handle_t* handle)

Enable the interrupt associated with the handle.

Note: For local interrupts (ESP_INTERNAL_* sources), this function has to be called on the CPU the interrupt is allocated on. Other interrupts have no such restriction.

Parameters **handle** –The handle, as obtained by esp_intr_alloc or esp_intr_alloc_intrstatus
Returns ESP_ERR_INVALID_ARG if the combination of arguments is invalid. ESP_OK otherwise

esp_err_t **esp_intr_set_in_iram**(*intr_handle_t* handle, bool is_in_iram)

Set the "in IRAM" status of the handler.

Note: Does not work on shared interrupts.

Parameters

- **handle** –The handle, as obtained by esp_intr_alloc or esp_intr_alloc_intrstatus
- **is_in_iram** –Whether the handler associated with this handle resides in IRAM. Handlers residing in IRAM can be called when cache is disabled.

Returns ESP_ERR_INVALID_ARG if the combination of arguments is invalid. ESP_OK otherwise

void **esp_intr_noniram_disable**(void)

Disable interrupts that aren't specifically marked as running from IRAM.

void **esp_intr_noniram_enable**(void)

Re-enable interrupts disabled by esp_intr_noniram_disable.

void **esp_intr_enable_source**(int inum)

enable the interrupt source based on its number

Parameters **inum** –interrupt number from 0 to 31

void **esp_intr_disable_source**(int inum)

disable the interrupt source based on its number

Parameters **inum** –interrupt number from 0 to 31

static inline int **esp_intr_flags_to_level**(int flags)

Get the lowest interrupt level from the flags.

Parameters **flags** –The same flags that pass to `esp_intr_alloc_intrstatus` API

Macros

ESP_INTR_FLAG_LEVEL1

Interrupt allocation flags.

These flags can be used to specify which interrupt qualities the code calling esp_intr_alloc* needs.Accept a Level 1 interrupt vector (lowest priority)

ESP_INTR_FLAG_LEVEL2

Accept a Level 2 interrupt vector.

ESP_INTR_FLAG_LEVEL3

Accept a Level 3 interrupt vector.

ESP_INTR_FLAG_LEVEL4

Accept a Level 4 interrupt vector.

ESP_INTR_FLAG_LEVEL5

Accept a Level 5 interrupt vector.

ESP_INTR_FLAG_LEVEL6

Accept a Level 6 interrupt vector.

ESP_INTR_FLAG_NMI

Accept a Level 7 interrupt vector (highest priority)

ESP_INTR_FLAG_SHARED

Interrupt can be shared between ISRs.

ESP_INTR_FLAG_EDGE

Edge-triggered interrupt.

ESP_INTR_FLAG_IRAM

ISR can be called if cache is disabled.

ESP_INTR_FLAG_INTRDISABLED

Return with this interrupt disabled.

ESP_INTR_FLAG_LOWMED

Low and medium prio interrupts. These can be handled in C.

ESP_INTR_FLAG_HIGH

High level interrupts. Need to be handled in assembly.

ESP_INTR_FLAG_LEVELMASK

Mask for all level flags.

ETS_INTERNAL_TIMER0_INTR_SOURCE

Platform timer 0 interrupt source.

The esp_intr_alloc* functions can allocate an int for all ETS_*_INTR_SOURCE interrupt sources that are routed through the interrupt mux. Apart from these sources, each core also has some internal sources that do not pass through the interrupt mux. To allocate an interrupt for these sources, pass these pseudo-sources to the functions.

ETS_INTERNAL_TIMER1_INTR_SOURCE

Platform timer 1 interrupt source.

ETS_INTERNAL_TIMER2_INTR_SOURCE

Platform timer 2 interrupt source.

ETS_INTERNAL_SW0_INTR_SOURCE

Software int source 1.

ETS_INTERNAL_SW1_INTR_SOURCE

Software int source 2.

ETS_INTERNAL_PROFILING_INTR_SOURCE

Int source for profiling.

ETS_INTERNAL_INTR_SOURCE_OFF

Provides SystemView with positive IRQ IDs, otherwise scheduler events are not shown properly

ESP_INTR_ENABLE(inum)

Enable interrupt by interrupt number

ESP_INTR_DISABLE(inum)

Disable interrupt by interrupt number

Type Definitions

typedef void (***intr_handler_t**)(void *arg)

Function prototype for interrupt handler function

typedef struct *intr_handle_data_t* **intr_handle_data_t**

Interrupt handler associated data structure

typedef *intr_handle_data_t* ***intr_handle_t**

Handle to an interrupt handler

2.7.18 Logging library

Overview

The logging library provides two ways for setting log verbosity:

- **At compile time**: in menuconfig, set the verbosity level using the option *CONFIG_LOG_DEFAULT_LEVEL*.
- Optionally, also in menuconfig, set the maximum verbosity level using the option *CONFIG_LOG_MAXIMUM_LEVEL*. By default this is the same as the default level, but it can be set higher in order to compile more otional logs into the firmware.
- **At runtime**: all logs for verbosity levels lower than *CONFIG_LOG_DEFAULT_LEVEL* are enabled by default. The function `esp_log_level_set()` can be used to set a logging level on a per module basis. Modules are identified by their tags, which are human-readable ASCII zero-terminated strings.

There are the following verbosity levels:

- Error (lowest)
- Warning
- Info
- Debug
- Verbose (highest)

Note: The function *esp_log_level_set()* cannot set logging levels higher than specified by *CONFIG_LOG_MAXIMUM_LEVEL*. To increase log level for a specific file above this maximum at compile time, use the macro *LOG_LOCAL_LEVEL* (see the details below).

How to use this library

In each C file that uses logging functionality, define the TAG variable as shown below:

```
static const char* TAG = "MyModule";
```

Then use one of logging macros to produce output, e.g:

```
ESP_LOGW(TAG, "Baud rate error %.1f%%. Requested: %d baud, actual: %d baud", error
↪* 100, baud_req, baud_real);
```

Several macros are available for different verbosity levels:

- ESP_LOGE - error (lowest)
- ESP_LOGW - warning
- ESP_LOGI - info
- ESP_LOGD - debug
- ESP_LOGV - verbose (highest)

Additionally, there are ESP_EARLY_LOGx versions for each of these macros, e.g. *ESP_EARLY_LOGE*. These versions have to be used explicitly in the early startup code only, before heap allocator and syscalls have been initialized. Normal ESP_LOGx macros can also be used while compiling the bootloader, but they will fall back to the same implementation as ESP_EARLY_LOGx macros.

There are also ESP_DRAM_LOGx versions for each of these macros, e.g. *ESP_DRAM_LOGE*. These versions are used in some places where logging may occur with interrupts disabled or with flash cache inaccessible. Use of this macros should be as sparing as possible, as logging in these types of code should be avoided for performance reasons.

Note: Inside critical sections interrupts are disabled so it's only possible to use ESP_DRAM_LOGx (preferred) or ESP_EARLY_LOGx. Even though it's possible to log in these situations, it's better if your program can be structured not to require it.

To override default verbosity level at file or component scope, define the LOG_LOCAL_LEVEL macro.

At file scope, define it before including esp_log.h, e.g.:

```
#define LOG_LOCAL_LEVEL ESP_LOG_VERBOSE
#include "esp_log.h"
```

At component scope, define it in the component makefile:

```
target_compile_definitions(${COMPONENT_LIB} PUBLIC "-DLOG_LOCAL_LEVEL=ESP_LOG_
↪VERBOSE")
```

To configure logging output per module at runtime, add calls to the function *esp_log_level_set()* as follows:

```
esp_log_level_set("*", ESP_LOG_ERROR);        // set all components to ERROR level
esp_log_level_set("wifi", ESP_LOG_WARN);      // enable WARN logs from WiFi stack
esp_log_level_set("dhcpc", ESP_LOG_INFO);     // enable INFO logs from DHCP client
```

Note: The "DRAM" and "EARLY" log macro variants documented above do not support per module setting of log verbosity. These macros will always log at the "default" verbosity level, which can only be changed at runtime by calling esp_log_level("*", level).

Logging to Host via JTAG By default, the logging library uses the vprintf-like function to write formatted output to the dedicated UART. By calling a simple API, all log output may be routed to JTAG instead, making logging several times faster. For details, please refer to Section *Logging to Host*.

Application Example

The logging library is commonly used by most esp-idf components and examples. For demonstration of log functionality, check ESP-IDF's examples directory. The most revelant examples that deal with logging are the following:

- system/ota
- storage/sd_card
- protocols/https_request

API Reference

Header File

- components/log/include/esp_log.h

Functions

void **esp_log_level_set**(const char *tag, *esp_log_level_t* level)

Set log level for given tag.

If logging for given component has already been enabled, changes previous setting.

Note that this function can not raise log level above the level set using CONFIG_LOG_MAXIMUM_LEVEL setting in menuconfig.

To raise log level above the default one for a given file, define LOG_LOCAL_LEVEL to one of the ESP_LOG_* values, before including esp_log.h in this file.

Parameters

- **tag** –Tag of the log entries to enable. Must be a non-NULL zero terminated string. Value "*" resets log level for all tags to the given value.
- **level** –Selects log level to enable. Only logs at this and lower verbosity levels will be shown.

esp_log_level_t **esp_log_level_get**(const char *tag)

Get log level for given tag, can be used to avoid expensive log statements.

Parameters **tag** –Tag of the log to query current level. Must be a non-NULL zero terminated string.

Returns The current log level for the given tag

vprintf_like_t **esp_log_set_vprintf**(*vprintf_like_t* func)

Set function used to output log entries.

By default, log output goes to UART0. This function can be used to redirect log output to some other destination, such as file or network. Returns the original log handler, which may be necessary to return output to the previous destination.

Note: Please note that function callback here must be re-entrant as it can be invoked in parallel from multiple thread context.

Parameters **func** –new Function used for output. Must have same signature as vprintf.

Returns func old Function used for output.

uint32_t **esp_log_timestamp**(void)

Function which returns timestamp to be used in log output.

This function is used in expansion of ESP_LOGx macros. In the 2nd stage bootloader, and at early application startup stage this function uses CPU cycle counter as time source. Later when FreeRTOS scheduler start running, it switches to FreeRTOS tick count.

For now, we ignore millisecond counter overflow.

Returns timestamp, in milliseconds

char ***esp_log_system_timestamp**(void)

Function which returns system timestamp to be used in log output.

This function is used in expansion of ESP_LOGx macros to print the system time as "HH:MM:SS.sss". The system time is initialized to 0 on startup, this can be set to the correct time with an SNTP sync, or manually with standard POSIX time functions.

Currently this will not get used in logging from binary blobs (i.e WiFi & Bluetooth libraries), these will still print the RTOS tick time.

Returns timestamp, in "HH:MM:SS.sss"

uint32_t **esp_log_early_timestamp**(void)

Function which returns timestamp to be used in log output.

This function uses HW cycle counter and does not depend on OS, so it can be safely used after application crash.

Returns timestamp, in milliseconds

void **esp_log_write**(*esp_log_level_t* level, const char *tag, const char *format, ...)

Write message into the log.

This function is not intended to be used directly. Instead, use one of ESP_LOGE, ESP_LOGW, ESP_LOGI, ESP_LOGD, ESP_LOGV macros.

This function or these macros should not be used from an interrupt.

void **esp_log_writev**(*esp_log_level_t* level, const char *tag, const char *format, va_list args)

Write message into the log, va_list variant.

This function is provided to ease integration toward other logging framework, so that esp_log can be used as a log sink.

See also:

esp_log_write()

Macros

ESP_LOG_BUFFER_HEX_LEVEL(tag, buffer, buff_len, level)

Log a buffer of hex bytes at specified level, separated into 16 bytes each line.

Parameters

- **tag** –description tag
- **buffer** –Pointer to the buffer array
- **buff_len** –length of buffer in bytes
- **level** –level of the log

ESP_LOG_BUFFER_CHAR_LEVEL(tag, buffer, buff_len, level)

Log a buffer of characters at specified level, separated into 16 bytes each line. Buffer should contain only printable characters.

Parameters

- **tag** –description tag

- **buffer** –Pointer to the buffer array
- **buff_len** –length of buffer in bytes
- **level** –level of the log

ESP_LOG_BUFFER_HEXDUMP(tag, buffer, buff_len, level)

Dump a buffer to the log at specified level.

The dump log shows just like the one below:

```
W (195) log_example: 0x3ffb4280   45 53 50 33 32 20 69 73  20 67 72 65 61 74␣
↪2c 20  |ESP32 is great, |
W (195) log_example: 0x3ffb4290   77 6f 72 6b 69 6e 67 20  61 6c 6f 6e 67 20␣
↪77 69  |working along wi|
W (205) log_example: 0x3ffb42a0   74 68 20 74 68 65 20 49  44 46 2e 00       ␣
↪       |th the IDF..|
```

It is highly recommend to use terminals with over 102 text width.

Parameters

- **tag** –description tag
- **buffer** –Pointer to the buffer array
- **buff_len** –length of buffer in bytes
- **level** –level of the log

ESP_LOG_BUFFER_HEX(tag, buffer, buff_len)

Log a buffer of hex bytes at Info level.

See also:

`esp_log_buffer_hex_level`

Parameters

- **tag** –description tag
- **buffer** –Pointer to the buffer array
- **buff_len** –length of buffer in bytes

ESP_LOG_BUFFER_CHAR(tag, buffer, buff_len)

Log a buffer of characters at Info level. Buffer should contain only printable characters.

See also:

`esp_log_buffer_char_level`

Parameters

- **tag** –description tag
- **buffer** –Pointer to the buffer array
- **buff_len** –length of buffer in bytes

portGET_ARGUMENT_COUNT_INNER(zero, one, count, ...)

macro to output logs in startup code, before heap allocator and syscalls have been initialized. log at `ESP_LOG_ERROR` level.

See also:

`printf`,`ESP_LOGE`,`ESP_DRAM_LOGE`

ESP_EARLY_LOGE(tag, format, ...)

In the future, we want to switch to C++20. We also want to become compatible with clang. Hence, we provide two versions of the following macros which are using variadic arguments. The first one is using the GNU extension ##__VA_ARGS__. The second one is using the C++20 feature **VA_OPT**(,). This allows users to compile their code with standard C++20 enabled instead of the GNU extension. Below C++20, we haven't found any good alternative to using ##__VA_ARGS__.

ESP_EARLY_LOGW(tag, format, ...)

macro to output logs in startup code at `ESP_LOG_WARN` level.

See also:

`ESP_EARLY_LOGE`,`ESP_LOGE`, `printf`

ESP_EARLY_LOGI(tag, format, ...)

macro to output logs in startup code at `ESP_LOG_INFO` level.

See also:

`ESP_EARLY_LOGE`,`ESP_LOGE`, `printf`

ESP_EARLY_LOGD(tag, format, ...)

macro to output logs in startup code at `ESP_LOG_DEBUG` level.

See also:

`ESP_EARLY_LOGE`,`ESP_LOGE`, `printf`

ESP_EARLY_LOGV(tag, format, ...)

macro to output logs in startup code at `ESP_LOG_VERBOSE` level.

See also:

`ESP_EARLY_LOGE`,`ESP_LOGE`, `printf`

_ESP_LOG_EARLY_ENABLED(log_level)

ESP_LOG_EARLY_IMPL(tag, format, log_level, log_tag_letter, ...)

ESP_LOGE(tag, format, ...)

ESP_LOGW(tag, format, ...)

ESP_LOGI(tag, format, ...)

ESP_LOGD(tag, format, ...)

ESP_LOGV(tag, format, ...)

ESP_LOG_LEVEL(level, tag, format, ...)

runtime macro to output logs at a specified level.

See also:

`printf`

Parameters

- **tag** – tag of the log, which can be used to change the log level by `esp_log_level_set` at runtime.

- **level** –level of the output log.
- **format** –format of the output log. see printf
- ... –variables to be replaced into the log. see printf

ESP_LOG_LEVEL_LOCAL (level, tag, format, ...)

runtime macro to output logs at a specified level. Also check the level with LOG_LOCAL_LEVEL.

See also:

printf, ESP_LOG_LEVEL

ESP_DRAM_LOGE (tag, format, ...)

Macro to output logs when the cache is disabled. log at ESP_LOG_ERROR level.

Similar to

Usage: ESP_DRAM_LOGE(DRAM_STR("my_tag"), "format", orESP_DRAM_LOGE(TAG, “format” , ⋯)`, where TAG is a char* that points to a str in the DRAM.

See also:

ESP_EARLY_LOGE, the log level cannot be changed per-tag, however esp_log_level_set(“*” , level) will set the default level which controls these log lines also.

See also:

esp_rom_printf,ESP_LOGE

Note: Unlike normal logging macros, it’ s possible to use this macro when interrupts are disabled or inside an ISR.

Note: Placing log strings in DRAM reduces available DRAM, so only use when absolutely essential.

ESP_DRAM_LOGW (tag, format, ...)

macro to output logs when the cache is disabled at ESP_LOG_WARN level.

See also:

ESP_DRAM_LOGW,ESP_LOGW, esp_rom_printf

ESP_DRAM_LOGI (tag, format, ...)

macro to output logs when the cache is disabled at ESP_LOG_INFO level.

See also:

ESP_DRAM_LOGI,ESP_LOGI, esp_rom_printf

ESP_DRAM_LOGD (tag, format, ...)

macro to output logs when the cache is disabled at ESP_LOG_DEBUG level.

See also:

ESP_DRAM_LOGD,ESP_LOGD, esp_rom_printf

ESP_DRAM_LOGV (tag, format, ...)

macro to output logs when the cache is disabled at `ESP_LOG_VERBOSE` level.

See also:

`ESP_DRAM_LOGV`,`ESP_LOGV`, `esp_rom_printf`

Type Definitions

typedef int (***vprintf_like_t**)(const char*, va_list)

Enumerations

enum **esp_log_level_t**

Log level.

Values:

enumerator **ESP_LOG_NONE**

No log output

enumerator **ESP_LOG_ERROR**

Critical errors, software module can not recover on its own

enumerator **ESP_LOG_WARN**

Error conditions from which recovery measures have been taken

enumerator **ESP_LOG_INFO**

Information messages which describe normal flow of events

enumerator **ESP_LOG_DEBUG**

Extra information which is not necessary for normal use (values, pointers, sizes, etc).

enumerator **ESP_LOG_VERBOSE**

Bigger chunks of debugging information, or frequent messages which can potentially flood the output.

2.7.19 Miscellaneous System APIs

Software reset

To perform software reset of the chip, *esp_restart()* function is provided. When the function is called, execution of the program will stop, both CPUs will be reset, application will be loaded by the bootloader and started again.

Additionally, *esp_register_shutdown_handler()* function is provided to register a routine which needs to be called prior to restart (when done by *esp_restart()*). This is similar to the functionality of `atexit` POSIX function.

Reset reason

ESP-IDF application can be started or restarted due to a variety of reasons. To get the last reset reason, call *esp_reset_reason()* function. See description of *esp_reset_reason_t* for the list of possible reset reasons.

Heap memory

Two heap memory related functions are provided:

- `esp_get_free_heap_size()` returns the current size of free heap memory
- `esp_get_minimum_free_heap_size()` returns the minimum size of free heap memory that was available during program execution.

Note that ESP-IDF supports multiple heaps with different capabilities. Functions mentioned in this section return the size of heap memory which can be allocated using `malloc` family of functions. For further information about heap memory see *Heap Memory Allocation*.

MAC Address

These APIs allow querying and customizing MAC addresses for different network interfaces that supported (e.g. Wi-Fi, Bluetooth, Ethernet).

To fetch MAC address for a specific interface (e.g. Wi-Fi, Bluetooth, Ethernet), call the function `esp_read_mac()` function.

In ESP-IDF these addresses are calculated from a single *Base MAC address*. By default, the Espressif base MAC address is used. This MAC is pre-programmed into ESP32 eFuse from the factory.

Interface	MAC address (4 universally administered, default)	MAC address (2 universally administered)
Wi-Fi Station	base_mac	base_mac
Wi-Fi SoftAP	base_mac, +1 to the last octet	*Local MAC* derived from Wi-Fi Station MAC)
Bluetooth	base_mac, +2 to the last octet	base_mac, +1 to the last octet
Ethernet	base_mac, +3 to the last octet	*Local MAC* (derived from Bluetooth MAC)

Note: The default *configuration* is 4 universally administered MAC addresses, and this is recommended when using Espressif-provided MAC addresses.

Custom Base MAC The default Base MAC is pre-programmed by Espressif in eFuse BLK0. To set a custom Base MAC instead, call the function `esp_base_mac_addr_set()` before initializing any network interfaces or calling the `esp_read_mac()` function. The customized MAC address can be stored in any supported storage device (e.g. Flash, NVS, etc).

The custom base MAC addresses should be allocated such that derived MAC addresses will not overlap. Configure the option *CONFIG_ESP32_UNIVERSAL_MAC_ADDRESSES* to set the number of valid universal MAC addresses that can be derived from the custom base MAC, according to the table above.

Note: It is also possible to call the function `esp_netif_set_mac()` to set the specific MAC used by a network interface, after network initialization. It's recommended to use the Base MAC approach documented here instead, to avoid the possibility of the original MAC address briefly appearing on the network before it is changed.

Custom MAC address in eFuse When reading custom MAC addresses from eFuse, ESP-IDF provides a helper function `esp_efuse_mac_get_custom()`. This loads the MAC address from eFuse BLK3. This function assumes that the custom base MAC address is stored in the following format:

Field	# of bits	Range of bits	Notes
Version	8	191:184	0: invalid, others —valid
Reserved	128	183:56	
MAC address	48	55:8	
MAC address CRC	8	7:0	CRC-8-CCITT, polynomial 0x07

Note: If the 3/4 coding scheme is enabled, all eFuse fields in this block must be burnt at the same time.

Once MAC address has been obtained using `esp_efuse_mac_get_custom()`, call `esp_base_mac_addr_set()` to set this MAC address as base MAC address.

Local vs Universal MAC addresses ESP32 comes pre-programmed with enough valid Espressif universally administered MAC addresses for all internal interfaces. The specific calculations to derive an interface' s MAC address from the base MAC address is shown in the table above..

When using a custom MAC address scheme, it' s possible that not all interfaces can be assigned a universally administered MAC address. In these cases, a locally administered MAC address is assigned. Note that these addresses are intended for use on a single local network, only.

See this article for the definition of local and universally administered MAC addresses.

Function `esp_derive_local_mac()` is called internally to derive a local MAC address from a universal MAC address. The process is as follows:

1. The U/L bit (bit value 0x2) is set in the first octet of the universal MAC address, creating a local MAC address.
2. If this bit is already set in the supplied universal MAC address (meaning: the supplied "universal" MAC address was in fact already a local MAC address), then the first octet of the local MAC address is XORed with 0x4.

Chip version

`esp_chip_info()` function fills `esp_chip_info_t` structure with information about the chip. This includes the chip revision, number of CPU cores, and a bit mask of features enabled in the chip.

SDK version

`esp_get_idf_version()` returns a string describing the IDF version which was used to compile the application. This is the same value as the one available through `IDF_VER` variable of the build system. The version string generally has the format of `git describe` output.

To get the version at build time, additional version macros are provided. They can be used to enable or disable parts of the program depending on IDF version.

- *`ESP_IDF_VERSION_MAJOR`*, *`ESP_IDF_VERSION_MINOR`*, *`ESP_IDF_VERSION_PATCH`* are defined to integers representing major, minor, and patch version.
- *`ESP_IDF_VERSION_VAL`* and *`ESP_IDF_VERSION`* can be used when implementing version checks:

```
#include "esp_idf_version.h"

#if ESP_IDF_VERSION >= ESP_IDF_VERSION_VAL(4, 0, 0)
    // enable functionality present in IDF v4.0
#endif
```

App version

Application version is stored in *esp_app_desc_t* structure. It is located in DROM sector and has a fixed offset from the beginning of the binary file. The structure is located after *esp_image_header_t* and *esp_image_segment_header_t* structures. The field version has string type and max length 32 chars.

To set version in your project manually you need to set `PROJECT_VER` variable in your project CMakeLists.txt/Makefile:

- In application CMakeLists.txt put `set(PROJECT_VER "0.1.0.1")` before including `project.cmake`.

(For legacy GNU Make build system: in application Makefile put `PROJECT_VER = "0.1.0.1"` before including `project.mk`.)

If *CONFIG_APP_PROJECT_VER_FROM_CONFIG* option is set, the value of *CONFIG_APP_PROJECT_VER* will be used. Otherwise if `PROJECT_VER` variable is not set in the project then it will be retrieved from either `$(PROJECT_PATH)/version.txt` file (if present) else using git command `git describe`. If neither is available then `PROJECT_VER` will be set to "1". Application can make use of this by calling *esp_ota_get_app_description()* or *esp_ota_get_partition_description()* functions.

API Reference

Header File

- components/esp_system/include/esp_system.h

Functions

esp_err_t **esp_register_shutdown_handler**(*shutdown_handler_t* handle)

Register shutdown handler.

This function allows you to register a handler that gets invoked before the application is restarted using esp_restart function.

Parameters **handle** –function to execute on restart

Returns

- ESP_OK on success
- ESP_ERR_INVALID_STATE if the handler has already been registered
- ESP_ERR_NO_MEM if no more shutdown handler slots are available

esp_err_t **esp_unregister_shutdown_handler**(*shutdown_handler_t* handle)

Unregister shutdown handler.

This function allows you to unregister a handler which was previously registered using esp_register_shutdown_handler function.

- ESP_OK on success
- ESP_ERR_INVALID_STATE if the given handler hasn't been registered before

void **esp_restart**(void)

Restart PRO and APP CPUs.

This function can be called both from PRO and APP CPUs. After successful restart, CPU reset reason will be SW_CPU_RESET. Peripherals (except for WiFi, BT, UART0, SPI1, and legacy timers) are not reset. This function does not return.

esp_reset_reason_t **esp_reset_reason**(void)

Get reason of last reset.

Returns See description of esp_reset_reason_t for explanation of each value.

uint32_t **esp_get_free_heap_size**(void)

Get the size of available heap.

Note that the returned value may be larger than the maximum contiguous block which can be allocated.

Returns Available heap size, in bytes.

uint32_t **esp_get_free_internal_heap_size**(void)

Get the size of available internal heap.

Note that the returned value may be larger than the maximum contiguous block which can be allocated.

Returns Available internal heap size, in bytes.

uint32_t **esp_get_minimum_free_heap_size**(void)

Get the minimum heap that has ever been available.

Returns Minimum free heap ever available

void **esp_system_abort**(const char *details)

Trigger a software abort.

Parameters **details** – Details that will be displayed during panic handling.

Type Definitions

typedef void (***shutdown_handler_t**)(void)

Shutdown handler type

Enumerations

enum **esp_reset_reason_t**

Reset reasons.

Values:

enumerator **ESP_RST_UNKNOWN**

Reset reason can not be determined.

enumerator **ESP_RST_POWERON**

Reset due to power-on event.

enumerator **ESP_RST_EXT**

Reset by external pin (not applicable for ESP32)

enumerator **ESP_RST_SW**

Software reset via esp_restart.

enumerator **ESP_RST_PANIC**

Software reset due to exception/panic.

enumerator **ESP_RST_INT_WDT**

Reset (software or hardware) due to interrupt watchdog.

enumerator **ESP_RST_TASK_WDT**

Reset due to task watchdog.

enumerator **ESP_RST_WDT**

Reset due to other watchdogs.

enumerator **ESP_RST_DEEPSLEEP**

Reset after exiting deep sleep mode.

enumerator **ESP_RST_BROWNOUT**

Brownout reset (software or hardware)

enumerator **ESP_RST_SDIO**

Reset over SDIO.

Header File

- components/esp_common/include/esp_idf_version.h

Functions

const char ***esp_get_idf_version**(void)

Return full IDF version string, same as 'git describe' output.

Note: If you are printing the ESP-IDF version in a log file or other information, this function provides more information than using the numerical version macros. For example, numerical version macros don't differentiate between development, pre-release and release versions, but the output of this function does.

Returns constant string from IDF_VER

Macros

ESP_IDF_VERSION_MAJOR

Major version number (X.x.x)

ESP_IDF_VERSION_MINOR

Minor version number (x.X.x)

ESP_IDF_VERSION_PATCH

Patch version number (x.x.X)

ESP_IDF_VERSION_VAL(major, minor, patch)

Macro to convert IDF version number into an integer

To be used in comparisons, such as ESP_IDF_VERSION >= ESP_IDF_VERSION_VAL(4, 0, 0)

ESP_IDF_VERSION

Current IDF version, as an integer

To be used in comparisons, such as ESP_IDF_VERSION >= ESP_IDF_VERSION_VAL(4, 0, 0)

2.7.20 Over The Air Updates (OTA)

OTA Process Overview

The OTA update mechanism allows a device to update itself based on data received while the normal firmware is running (for example, over Wi-Fi or Bluetooth.)

OTA requires configuring the *Partition Table* of the device with at least two "OTA app slot" partitions (i.e. *ota_0* and *ota_1*) and an "OTA Data Partition".

The OTA operation functions write a new app firmware image to whichever OTA app slot that is currently not selected for booting. Once the image is verified, the OTA Data partition is updated to specify that this image should be used for the next boot.

OTA Data Partition

An OTA data partition (type `data`, subtype `ota`) must be included in the *Partition Table* of any project which uses the OTA functions.

For factory boot settings, the OTA data partition should contain no data (all bytes erased to 0xFF). In this case the esp-idf software bootloader will boot the factory app if it is present in the the partition table. If no factory app is included in the partition table, the first available OTA slot (usually `ota_0`) is booted.

After the first OTA update, the OTA data partition is updated to specify which OTA app slot partition should be booted next.

The OTA data partition is two flash sectors (0x2000 bytes) in size, to prevent problems if there is a power failure while it is being written. Sectors are independently erased and written with matching data, and if they disagree a counter field is used to determine which sector was written more recently.

App rollback

The main purpose of the application rollback is to keep the device working after the update. This feature allows you to roll back to the previous working application in case a new application has critical errors. When the rollback process is enabled and an OTA update provides a new version of the app, one of three things can happen:

- The application works fine, *`esp_ota_mark_app_valid_cancel_rollback()`* marks the running application with the state `ESP_OTA_IMG_VALID`. There are no restrictions on booting this application.
- The application has critical errors and further work is not possible, a rollback to the previous application is required, *`esp_ota_mark_app_invalid_rollback_and_reboot()`* marks the running application with the state `ESP_OTA_IMG_INVALID` and reset. This application will not be selected by the bootloader for boot and will boot the previously working application.
- If the *CONFIG_BOOTLOADER_APP_ROLLBACK_ENABLE* option is set, and a reset occurs without calling either function then the application is rolled back.

Note: The state is not written to the binary image of the application it is written to the `otadata` partition. The partition contains a `ota_seq` counter which is a pointer to the slot (ota_0, ota_1, ···) from which the application will be selected for boot.

App OTA State States control the process of selecting a boot app:

States	Restriction of selecting a boot app in bootloader
ESP_OTA_IMG_VALID	No restriction. Will be selected.
ESP_OTA_IMG_UNDEFINED	No restriction. Will be selected.
ESP_OTA_IMG_INVALID	Will not be selected.
ESP_OTA_IMG_ABORTED	Will not be selected.
ESP_OTA_IMG_NEW	If *CONFIG_BOOTLOADER_APP_ROLLBACK_ENABLE* option is set it will be selected only once. In bootloader the state immediately changes to `ESP_OTA_IMG_PENDING_VERIFY`.
ESP_OTA_IMG_PENDING_VERIFY	If *CONFIG_BOOTLOADER_APP_ROLLBACK_ENABLE* option is set it will not be selected and the state will change to `ESP_OTA_IMG_ABORTED`.

If *CONFIG_BOOTLOADER_APP_ROLLBACK_ENABLE* option is not enabled (by default), then the use of the following functions *esp_ota_mark_app_valid_cancel_rollback()* and *esp_ota_mark_app_invalid_rollback_and_reboot()* are optional, and ESP_OTA_IMG_NEW and ESP_OTA_IMG_PENDING_VERIFY states are not used.

An option in Kconfig *CONFIG_BOOTLOADER_APP_ROLLBACK_ENABLE* allows you to track the first boot of a new application. In this case, the application must confirm its operability by calling *esp_ota_mark_app_valid_cancel_rollback()* function, otherwise the application will be rolled back upon reboot. It allows you to control the operability of the application during the boot phase. Thus, a new application has only one attempt to boot successfully.

Rollback Process The description of the rollback process when *CONFIG_BOOTLOADER_APP_ROLLBACK_ENABLE* option is enabled:

- The new application successfully downloaded and *esp_ota_set_boot_partition()* function makes this partition bootable and sets the state ESP_OTA_IMG_NEW. This state means that the application is new and should be monitored for its first boot.
- Reboot *esp_restart()*.
- The bootloader checks for the ESP_OTA_IMG_PENDING_VERIFY state if it is set, then it will be written to ESP_OTA_IMG_ABORTED.
- The bootloader selects a new application to boot so that the state is not set as ESP_OTA_IMG_INVALID or ESP_OTA_IMG_ABORTED.
- The bootloader checks the selected application for ESP_OTA_IMG_NEW state if it is set, then it will be written to ESP_OTA_IMG_PENDING_VERIFY. This state means that the application requires confirmation of its operability, if this does not happen and a reboot occurs, this state will be overwritten to ESP_OTA_IMG_ABORTED (see above) and this application will no longer be able to start, i.e. there will be a rollback to the previous work application.
- A new application has started and should make a self-test.
- If the self-test has completed successfully, then you must call the function *esp_ota_mark_app_valid_cancel_rollback()* because the application is awaiting confirmation of operability (ESP_OTA_IMG_PENDING_VERIFY state).
- If the self-test fails then call *esp_ota_mark_app_invalid_rollback_and_reboot()* function to roll back to the previous working application, while the invalid application is set ESP_OTA_IMG_INVALID state.
- If the application has not been confirmed, the state remains ESP_OTA_IMG_PENDING_VERIFY, and the next boot it will be changed to ESP_OTA_IMG_ABORTED. That will prevent re-boot of this application. There will be a rollback to the previous working application.

Unexpected Reset If a power loss or an unexpected crash occurs at the time of the first boot of a new application, it will roll back the application.

Recommendation: Perform the self-test procedure as quickly as possible, to prevent rollback due to power loss.

Only OTA partitions can be rolled back. Factory partition is not rolled back.

Booting invalid/aborted apps Booting an application which was previously set to ESP_OTA_IMG_INVALID or ESP_OTA_IMG_ABORTED is possible:

- Get the last invalid application partition *esp_ota_get_last_invalid_partition()*.
- Pass the received partition to *esp_ota_set_boot_partition()*, this will update the otadata.
- Restart *esp_restart()*. The bootloader will boot the specified application.

To determine if self-tests should be run during startup of an application, call the *esp_ota_get_state_partition()* function. If result is ESP_OTA_IMG_PENDING_VERIFY then self-testing and subsequent confirmation of operability is required.

Where the states are set A brief description of where the states are set:

- ESP_OTA_IMG_VALID state is set by *esp_ota_mark_app_valid_cancel_rollback()* function.
- ESP_OTA_IMG_UNDEFINED state is set by *esp_ota_set_boot_partition()* function if *CONFIG_BOOTLOADER_APP_ROLLBACK_ENABLE* option is not enabled.
- ESP_OTA_IMG_NEW state is set by *esp_ota_set_boot_partition()* function if *CONFIG_BOOTLOADER_APP_ROLLBACK_ENABLE* option is enabled.
- ESP_OTA_IMG_INVALID state is set by *esp_ota_mark_app_invalid_rollback_and_reboot()* function.
- ESP_OTA_IMG_ABORTED state is set if there was no confirmation of the application operability and occurs reboots (if *CONFIG_BOOTLOADER_APP_ROLLBACK_ENABLE* option is enabled).
- ESP_OTA_IMG_PENDING_VERIFY state is set in a bootloader if *CONFIG_BOOTLOADER_APP_ROLLBACK_ENABLE* option is enabled and selected app has ESP_OTA_IMG_NEW state.

Anti-rollback

Anti-rollback prevents rollback to application with security version lower than one programmed in eFuse of chip.

This function works if set *CONFIG_BOOTLOADER_APP_ANTI_ROLLBACK* option. In the bootloader, when selecting a bootable application, an additional security version check is added which is on the chip and in the application image. The version in the bootable firmware must be greater than or equal to the version in the chip.

CONFIG_BOOTLOADER_APP_ANTI_ROLLBACK and *CONFIG_BOOTLOADER_APP_ROLLBACK_ENABLE* options are used together. In this case, rollback is possible only on the security version which is equal or higher than the version in the chip.

A typical anti-rollback scheme is

- New firmware released with the elimination of vulnerabilities with the previous version of security.
- After the developer makes sure that this firmware is working. He can increase the security version and release a new firmware.
- Download new application.
- To make it bootable, run the function *esp_ota_set_boot_partition()*. If the security version of the new application is smaller than the version in the chip, the new application will be erased. Update to new firmware is not possible.
- Reboot.
- In the bootloader, an application with a security version greater than or equal to the version in the chip will be selected. If otadata is in the initial state, and one firmware was loaded via a serial channel, whose secure version is higher than the chip, then the secure version of efuse will be immediately updated in the bootloader.
- New application booted. Then the application should perform diagnostics of the operation and if it is completed successfully, you should call *esp_ota_mark_app_valid_cancel_rollback()* function to mark the running application with the ESP_OTA_IMG_VALID state and update the secure version on chip. Note that if was called *esp_ota_mark_app_invalid_rollback_and_reboot()* function a rollback may not happend due to the device may not have any bootable apps then it will return ESP_ERR_OTA_ROLLBACK_FAILED error and stay in the ESP_OTA_IMG_PENDING_VERIFY state.
- The next update of app is possible if a running app is in the ESP_OTA_IMG_VALID state.

Recommendation:

If you want to avoid the download/erase overhead in case of the app from the server has security version lower then running app you have to get `new_app_info.secure_version` from the first package of an image and compare it with the secure version of efuse. Use `esp_efuse_check_secure_version(new_app_info.secure_version)` function if it is true then continue downloading otherwise abort.

```
....
bool image_header_was_checked = false;
while (1) {
    int data_read = esp_http_client_read(client, ota_write_data, BUFFSIZE);
    ...
```

(continues on next page)

(continued from previous page)

```
    if (data_read > 0) {
        if (image_header_was_checked == false) {
            esp_app_desc_t new_app_info;
            if (data_read > sizeof(esp_image_header_t) + sizeof(esp_image_segment_
↪header_t) + sizeof(esp_app_desc_t)) {
                // check current version with downloading
                if (esp_efuse_check_secure_version(new_app_info.secure_version) ==␣
↪false) {
                    ESP_LOGE(TAG, "This a new app can not be downloaded due to a␣
↪secure version is lower than stored in efuse.");
                    http_cleanup(client);
                    task_fatal_error();
                }

                image_header_was_checked = true;

                esp_ota_begin(update_partition, OTA_SIZE_UNKNOWN, &update_handle);
            }
        }
        esp_ota_write( update_handle, (const void *)ota_write_data, data_read);
    }
}
...
```

Restrictions:

- The number of bits in the `secure_version` field is limited to 32 bits. This means that only 32 times you can do an anti-rollback. You can reduce the length of this efuse field use *CONFIG_BOOTLOADER_APP_SEC_VER_SIZE_EFUSE_FIELD* option.
- Anti-rollback only works if the encoding scheme for efuse is set to `NONE`.
- The partition table should not have a factory partition, only two of the app.

`security_version`:

- In application image it is stored in `esp_app_desc` structure. The number is set *CONFIG_BOOTLOADER_APP_SECURE_VERSION*.
- In ESP32 it is stored in efuse `EFUSE_BLK3_RDATA4_REG`. (when a eFuse bit is programmed to 1, it can never be reverted to 0). The number of bits set in this register is the `security_version` from app.

Secure OTA Updates Without Secure boot

The verification of signed OTA updates can be performed even without enabling hardware secure boot. This can be achieved by setting *CONFIG_SECURE_SIGNED_APPS_NO_SECURE_BOOT* and *CONFIG_SECURE_SIGNED_ON_UPDATE_NO_SECURE_BOOT*

For more information refer to *Signed App Verification Without Hardware Secure Boot*

OTA Tool (otatool.py)

The component *app_update* provides a tool otatool.py for performing OTA partition-related operations on a target device. The following operations can be performed using the tool:

- read contents of otadata partition (read_otadata)
- erase otadata partition, effectively resetting device to factory app (erase_otadata)
- switch OTA partitions (switch_ota_partition)
- erasing OTA partition (erase_ota_partition)
- write to OTA partition (write_ota_partition)
- read contents of OTA partition (read_ota_partition)

The tool can either be imported and used from another Python script or invoked from shell script for users wanting to perform operation programmatically. This is facilitated by the tool's Python API and command-line interface, respectively.

Python API Before anything else, make sure that the *otatool* module is imported.

```
import sys
import os

idf_path = os.environ["IDF_PATH"]  # get value of IDF_PATH from environment
otatool_dir = os.path.join(idf_path, "components", "app_update")  # otatool.py␣
↪lives in $IDF_PATH/components/app_update

sys.path.append(otatool_dir)  # this enables Python to find otatool module
from otatool import *  # import all names inside otatool module
```

The starting point for using the tool's Python API to do is create a *OtatoolTarget* object:

```
# Create a partool.py target device connected on serial port /dev/ttyUSB1
target = OtatoolTarget("/dev/ttyUSB1")
```

The created object can now be used to perform operations on the target device:

```
# Erase otadata, reseting the device to factory app
target.erase_otadata()

# Erase contents of OTA app slot 0
target.erase_ota_partition(0)

# Switch boot partition to that of app slot 1
target.switch_ota_partition(1)

# Read OTA partition 'ota_3' and save contents to a file named 'ota_3.bin'
target.read_ota_partition("ota_3", "ota_3.bin")
```

The OTA partition to operate on is specified using either the app slot number or the partition name.

More information on the Python API is available in the docstrings for the tool.

Command-line Interface The command-line interface of *otatool.py* has the following structure:

```
otatool.py [command-args] [subcommand] [subcommand-args]

- command-args - these are arguments that are needed for executing the main␣
↪command (parttool.py), mostly pertaining to the target device
- subcommand - this is the operation to be performed
- subcommand-args - these are arguments that are specific to the chosen operation
```

```
# Erase otadata, resetting the device to factory app
otatool.py --port "/dev/ttyUSB1" erase_otadata

# Erase contents of OTA app slot 0
otatool.py --port "/dev/ttyUSB1" erase_ota_partition --slot 0

# Switch boot partition to that of app slot 1
otatool.py --port "/dev/ttyUSB1" switch_ota_partition --slot 1

# Read OTA partition 'ota_3' and save contents to a file named 'ota_3.bin'
otatool.py --port "/dev/ttyUSB1" read_ota_partition --name=ota_3 --output=ota_3.bin
```

More information can be obtained by specifying *–help* as argument:

```
# Display possible subcommands and show main command argument descriptions
otatool.py --help

# Show descriptions for specific subcommand arguments
otatool.py [subcommand] --help
```

See also

- *Partition Table documentation*
- *Lower-Level SPI Flash/Partition API*
- *ESP HTTPS OTA*

Application Example

End-to-end example of OTA firmware update workflow: system/ota.

API Reference

Header File

- components/app_update/include/esp_ota_ops.h

Functions

const *esp_app_desc_t* ***esp_ota_get_app_description**(void)

Return esp_app_desc structure. This structure includes app version.

Return description for running app.

Returns Pointer to esp_app_desc structure.

int **esp_ota_get_app_elf_sha256**(char *dst, size_t size)

Fill the provided buffer with SHA256 of the ELF file, formatted as hexadecimal, null-terminated. If the buffer size is not sufficient to fit the entire SHA256 in hex plus a null terminator, the largest possible number of bytes will be written followed by a null.

Parameters

- **dst** –Destination buffer
- **size** –Size of the buffer

Returns Number of bytes written to dst (including null terminator)

esp_err_t **esp_ota_begin**(const *esp_partition_t* *partition, size_t image_size, *esp_ota_handle_t* *out_handle)

Commence an OTA update writing to the specified partition.

The specified partition is erased to the specified image size.

If image size is not yet known, pass OTA_SIZE_UNKNOWN which will cause the entire partition to be erased.

On success, this function allocates memory that remains in use until esp_ota_end() is called with the returned handle.

Note: If the rollback option is enabled and the running application has the ESP_OTA_IMG_PENDING_VERIFY state then it will lead to the ESP_ERR_OTA_ROLLBACK_INVALID_STATE error. Confirm the running app before to run download a new app, use esp_ota_mark_app_valid_cancel_rollback() function for it (this should be done as early as possible when you first download a new application).

Parameters

- **partition** –Pointer to info for partition which will receive the OTA update. Required.
- **image_size** –Size of new OTA app image. Partition will be erased in order to receive this size of image. If 0 or OTA_SIZE_UNKNOWN, the entire partition is erased.

- **out_handle** –On success, returns a handle which should be used for subsequent esp_ota_write() and esp_ota_end() calls.

Returns

- ESP_OK: OTA operation commenced successfully.
- ESP_ERR_INVALID_ARG: partition or out_handle arguments were NULL, or partition doesn't point to an OTA app partition.
- ESP_ERR_NO_MEM: Cannot allocate memory for OTA operation.
- ESP_ERR_OTA_PARTITION_CONFLICT: Partition holds the currently running firmware, cannot update in place.
- ESP_ERR_NOT_FOUND: Partition argument not found in partition table.
- ESP_ERR_OTA_SELECT_INFO_INVALID: The OTA data partition contains invalid data.
- ESP_ERR_INVALID_SIZE: Partition doesn't fit in configured flash size.
- ESP_ERR_FLASH_OP_TIMEOUT or ESP_ERR_FLASH_OP_FAIL: Flash write failed.
- ESP_ERR_OTA_ROLLBACK_INVALID_STATE: If the running app has not confirmed state. Before performing an update, the application must be valid.

esp_err_t **esp_ota_write**(*esp_ota_handle_t* handle, const void *data, size_t size)

Write OTA update data to partition.

This function can be called multiple times as data is received during the OTA operation. Data is written sequentially to the partition.

Parameters

- **handle** –Handle obtained from esp_ota_begin
- **data** –Data buffer to write
- **size** –Size of data buffer in bytes.

Returns

- ESP_OK: Data was written to flash successfully.
- ESP_ERR_INVALID_ARG: handle is invalid.
- ESP_ERR_OTA_VALIDATE_FAILED: First byte of image contains invalid app image magic byte.
- ESP_ERR_FLASH_OP_TIMEOUT or ESP_ERR_FLASH_OP_FAIL: Flash write failed.
- ESP_ERR_OTA_SELECT_INFO_INVALID: OTA data partition has invalid contents

esp_err_t **esp_ota_write_with_offset**(*esp_ota_handle_t* handle, const void *data, size_t size, uint32_t offset)

Write OTA update data to partition.

This function can write data in non contiguous manner. If flash encryption is enabled, data should be 16 byte aligned.

Note: While performing OTA, if the packets arrive out of order, esp_ota_write_with_offset() can be used to write data in non contiguous manner. Use of esp_ota_write_with_offset() in combination with esp_ota_write() is not recommended.

Parameters

- **handle** –Handle obtained from esp_ota_begin
- **data** –Data buffer to write
- **size** –Size of data buffer in bytes
- **offset** –Offset in flash partition

Returns

- ESP_OK: Data was written to flash successfully.
- ESP_ERR_INVALID_ARG: handle is invalid.
- ESP_ERR_OTA_VALIDATE_FAILED: First byte of image contains invalid app image magic byte.

- ESP_ERR_FLASH_OP_TIMEOUT or ESP_ERR_FLASH_OP_FAIL: Flash write failed.
- ESP_ERR_OTA_SELECT_INFO_INVALID: OTA data partition has invalid contents

esp_err_t **esp_ota_end**(*esp_ota_handle_t* handle)

Finish OTA update and validate newly written app image.

Note: After calling esp_ota_end(), the handle is no longer valid and any memory associated with it is freed (regardless of result).

Parameters **handle** –Handle obtained from esp_ota_begin().

Returns

- ESP_OK: Newly written OTA app image is valid.
- ESP_ERR_NOT_FOUND: OTA handle was not found.
- ESP_ERR_INVALID_ARG: Handle was never written to.
- ESP_ERR_OTA_VALIDATE_FAILED: OTA image is invalid (either not a valid app image, or - if secure boot is enabled - signature failed to verify.)
- ESP_ERR_INVALID_STATE: If flash encryption is enabled, this result indicates an internal error writing the final encrypted bytes to flash.

esp_err_t **esp_ota_abort**(*esp_ota_handle_t* handle)

Abort OTA update, free the handle and memory associated with it.

Parameters **handle** –obtained from esp_ota_begin().

Returns

- ESP_OK: Handle and its associated memory is freed successfully.
- ESP_ERR_NOT_FOUND: OTA handle was not found.

esp_err_t **esp_ota_set_boot_partition**(const *esp_partition_t* *partition)

Configure OTA data for a new boot partition.

Note: If this function returns ESP_OK, calling esp_restart() will boot the newly configured app partition.

Parameters **partition** –Pointer to info for partition containing app image to boot.

Returns

- ESP_OK: OTA data updated, next reboot will use specified partition.
- ESP_ERR_INVALID_ARG: partition argument was NULL or didn’t point to a valid OTA partition of type “app”.
- ESP_ERR_OTA_VALIDATE_FAILED: Partition contained invalid app image. Also returned if secure boot is enabled and signature validation failed.
- ESP_ERR_NOT_FOUND: OTA data partition not found.
- ESP_ERR_FLASH_OP_TIMEOUT or ESP_ERR_FLASH_OP_FAIL: Flash erase or write failed.

const *esp_partition_t* ***esp_ota_get_boot_partition**(void)

Get partition info of currently configured boot app.

If esp_ota_set_boot_partition() has been called, the partition which was set by that function will be returned.

If esp_ota_set_boot_partition() has not been called, the result is usually the same as esp_ota_get_running_partition(). The two results are not equal if the configured boot partition does not contain a valid app (meaning that the running partition will be an app that the bootloader chose via fallback).

If the OTA data partition is not present or not valid then the result is the first app partition found in the partition table. In priority order, this means: the factory app, the first OTA app slot, or the test app partition.

Note that there is no guarantee the returned partition is a valid app. Use esp_image_verify(ESP_IMAGE_VERIFY, ⋯) to verify if the returned partition contains a bootable image.

Returns Pointer to info for partition structure, or NULL if partition table is invalid or a flash read operation failed. Any returned pointer is valid for the lifetime of the application.

const *esp_partition_t* ***esp_ota_get_running_partition**(void)

Get partition info of currently running app.

This function is different to esp_ota_get_boot_partition() in that it ignores any change of selected boot partition caused by esp_ota_set_boot_partition(). Only the app whose code is currently running will have its partition information returned.

The partition returned by this function may also differ from esp_ota_get_boot_partition() if the configured boot partition is somehow invalid, and the bootloader fell back to a different app partition at boot.

Returns Pointer to info for partition structure, or NULL if no partition is found or flash read operation failed. Returned pointer is valid for the lifetime of the application.

const *esp_partition_t* ***esp_ota_get_next_update_partition**(const *esp_partition_t* *start_from)

Return the next OTA app partition which should be written with a new firmware.

Call this function to find an OTA app partition which can be passed to esp_ota_begin().

Finds next partition round-robin, starting from the current running partition.

Parameters **start_from** –If set, treat this partition info as describing the current running partition. Can be NULL, in which case esp_ota_get_running_partition() is used to find the currently running partition. The result of this function is never the same as this argument.

Returns Pointer to info for partition which should be updated next. NULL result indicates invalid OTA data partition, or that no eligible OTA app slot partition was found.

esp_err_t **esp_ota_get_partition_description**(const *esp_partition_t* *partition, *esp_app_desc_t* *app_desc)

Returns esp_app_desc structure for app partition. This structure includes app version.

Returns a description for the requested app partition.

Parameters

- **partition** –**[in]** Pointer to app partition. (only app partition)
- **app_desc** –**[out]** Structure of info about app.

Returns

- ESP_OK Successful.
- ESP_ERR_NOT_FOUND app_desc structure is not found. Magic word is incorrect.
- ESP_ERR_NOT_SUPPORTED Partition is not application.
- ESP_ERR_INVALID_ARG Arguments is NULL or if partition ' s offset exceeds partition size.
- ESP_ERR_INVALID_SIZE Read would go out of bounds of the partition.
- or one of error codes from lower-level flash driver.

uint8_t **esp_ota_get_app_partition_count**(void)

Returns number of ota partitions provided in partition table.

Returns

- Number of OTA partitions

esp_err_t **esp_ota_mark_app_valid_cancel_rollback**(void)

This function is called to indicate that the running app is working well.

Returns

- ESP_OK: if successful.

esp_err_t **esp_ota_mark_app_invalid_rollback_and_reboot**(void)

This function is called to roll back to the previously workable app with reboot.

If rollback is successful then device will reset else API will return with error code. Checks applications on a flash drive that can be booted in case of rollback. If the flash does not have at least one app (except the running app) then rollback is not possible.

Returns

- ESP_FAIL: if not successful.
- ESP_ERR_OTA_ROLLBACK_FAILED: The rollback is not possible due to flash does not have any apps.

const *esp_partition_t* ***esp_ota_get_last_invalid_partition**(void)

Returns last partition with invalid state (ESP_OTA_IMG_INVALID or ESP_OTA_IMG_ABORTED).

Returns partition.

esp_err_t **esp_ota_get_state_partition**(const *esp_partition_t* *partition, esp_ota_img_states_t *ota_state)

Returns state for given partition.

Parameters

- **partition** –**[in]** Pointer to partition.
- **ota_state** –**[out]** state of partition (if this partition has a record in otadata).

Returns

- ESP_OK: Successful.
- ESP_ERR_INVALID_ARG: partition or ota_state arguments were NULL.
- ESP_ERR_NOT_SUPPORTED: partition is not ota.
- ESP_ERR_NOT_FOUND: Partition table does not have otadata or state was not found for given partition.

esp_err_t **esp_ota_erase_last_boot_app_partition**(void)

Erase previous boot app partition and corresponding otadata select for this partition.

When current app is marked to as valid then you can erase previous app partition.

Returns

- ESP_OK: Successful, otherwise ESP_ERR.

bool **esp_ota_check_rollback_is_possible**(void)

Checks applications on the slots which can be booted in case of rollback.

These applications should be valid (marked in otadata as not UNDEFINED, INVALID or ABORTED and crc is good) and be able booted, and secure_version of app >= secure_version of efuse (if anti-rollback is enabled).

Returns

- True: Returns true if the slots have at least one app (except the running app).
- False: The rollback is not possible.

Macros

OTA_SIZE_UNKNOWN

Used for esp_ota_begin() if new image size is unknown

OTA_WITH_SEQUENTIAL_WRITES

Used for esp_ota_begin() if new image size is unknown and erase can be done in incremental manner (assuming write operation is in continuous sequence)

ESP_ERR_OTA_BASE

Base error code for ota_ops api

ESP_ERR_OTA_PARTITION_CONFLICT

Error if request was to write or erase the current running partition

ESP_ERR_OTA_SELECT_INFO_INVALID

Error if OTA data partition contains invalid content

ESP_ERR_OTA_VALIDATE_FAILED

Error if OTA app image is invalid

ESP_ERR_OTA_SMALL_SEC_VER

Error if the firmware has a secure version less than the running firmware.

ESP_ERR_OTA_ROLLBACK_FAILED

Error if flash does not have valid firmware in passive partition and hence rollback is not possible

ESP_ERR_OTA_ROLLBACK_INVALID_STATE

Error if current active firmware is still marked in pending validation state (ESP_OTA_IMG_PENDING_VERIFY), essentially first boot of firmware image post upgrade and hence firmware upgrade is not possible

Type Definitions

typedef uint32_t **esp_ota_handle_t**

Opaque handle for an application OTA update.

esp_ota_begin() returns a handle which is then used for subsequent calls to esp_ota_write() and esp_ota_end().

Debugging OTA Failure

2.7.21 Performance Monitor

The Performance Monitor component provides APIs to use ESP32 internal performance counters to profile functions and applications.

Application Example

An example which combines performance monitor is provided in `examples/system/perfmon` directory. This example initializes the performance monitor structure and execute them with printing the statistics.

High level API Reference

Header Files

- perfmon/include/perfmon.h

API Reference

Header File

- components/perfmon/include/xtensa_perfmon_access.h

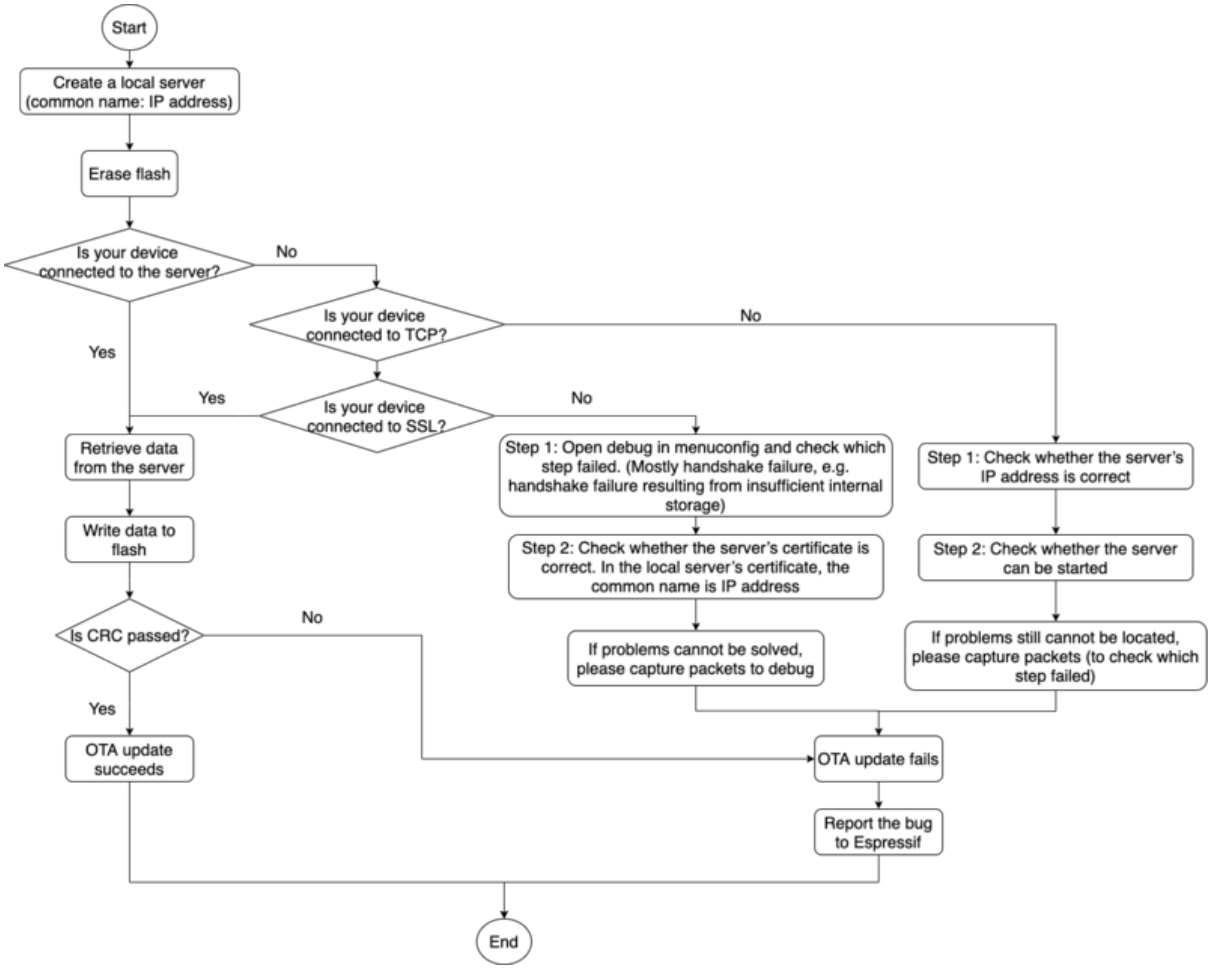

Fig. 39: How to Debug When OTA Fails (click to enlarge)

Functions

esp_err_t **xtensa_perfmon_init**(int id, uint16_t select, uint16_t mask, int kernelcnt, int tracelevel)

Init Performance Monitoor.

Initialize performance monitor register with define values

Parameters
- **id** –**[in]** performance counter number
- **select** –**[in]** select value from PMCTRLx register
- **mask** –**[in]** mask value from PMCTRLx register
- **kernelcnt** –**[in]** kernelcnt value from PMCTRLx register
- **tracelevel** –**[in]** tracelevel value from PMCTRLx register

Returns
- ESP_OK on success
- ESP_ERR_INVALID_ARG if one of the arguments is not correct

esp_err_t **xtensa_perfmon_reset**(int id)

Reset PM counter.

Reset PM counter. Writes 0 to the PMx register.

Parameters **id** –**[in]** performance counter number

Returns
- ESP_OK on success
- ESP_ERR_INVALID_ARG if id out of range

void **xtensa_perfmon_start**(void)

Start PM counters.

Start all PM counters synchronously. Write 1 to the PGM register

void **xtensa_perfmon_stop**(void)

Stop PM counters.

Stop all PM counters synchronously. Write 0 to the PGM register

uint32_t **xtensa_perfmon_value**(int id)

Read PM counter.

Read value of defined PM counter.

Parameters **id** –**[in]** performance counter number

Returns
- Performance counter value

esp_err_t **xtensa_perfmon_overflow**(int id)

Read PM overflow state.

Read overflow value of defined PM counter.

Parameters **id** –**[in]** performance counter number

Returns
- ESP_OK if there is no overflow (overflow = 0)
- ESP_FAIL if overflow occure (overflow = 1)

void **xtensa_perfmon_dump**(void)

Dump PM values.

Dump all PM register to the console.

Header File

- components/perfmon/include/xtensa_perfmon_apis.h

Functions

esp_err_t **xtensa_perfmon_exec**(const *xtensa_perfmon_config_t* *config)

Execute PM.

Execute performance counter for dedicated function with defined parameters

Parameters **config** –**[in]** pointer to the configuration structure

Returns

- ESP_OK if no errors
- ESP_ERR_INVALID_ARG if one of the required parameters not defined
- ESP_FAIL - counter overflow

void **xtensa_perfmon_view_cb**(void *params, uint32_t select, uint32_t mask, uint32_t value)

Dump PM results.

Callback to dump perfmon result to a FILE* stream specified in perfmon_config_t::callback_params. If callback_params is set to NULL, will print to stdout

Parameters

- **params** –**[in]** used parameters passed from configuration (callback_params). This parameter expected as FILE* hanle, where data will be stored. If this parameter NULL, then data will be stored to the stdout.
- **select** –**[in]** select value for current counter
- **mask** –**[in]** mask value for current counter
- **value** –**[in]** counter value for current counter

Structures

struct **xtensa_perfmon_config**

Performance monitor configuration structure.

Structure to configure performance counter to measure dedicated function

Public Members

int **repeat_count**

how much times function will be called before the calback will be repeated

float **max_deviation**

Difference between min and max counter number 0..1, 0 - no difference, 1 - not used

void ***call_params**

This pointer will be passed to the call_function as a parameter

void (***call_function**)(void *params)

pointer to the function that have to be called

void (***callback**)(void *params, uint32_t select, uint32_t mask, uint32_t value)

pointer to the function that will be called with result parameters

void ***callback_params**

parameter that will be passed to the callback

int **tracelevel**

trace level for all counters. In case of negative value, the filter will be ignored. If it's >=0, then the perfmon will count only when interrupt level > tracelevel. It's useful to monitor interrupts.

uint32_t **counters_size**

amount of counter in the list

const uint32_t ***select_mask**

list of the select/mask parameters

Type Definitions

typedef struct *xtensa_perfmon_config* **xtensa_perfmon_config_t**

Performance monitor configuration structure.

Structure to configure performance counter to measure dedicated function

2.7.22 Power Management

Overview

Power management algorithm included in ESP-IDF can adjust the advanced peripheral bus (APB) frequency, CPU frequency, and put the chip into light sleep mode to run an application at smallest possible power consumption, given the requirements of application components.

Application components can express their requirements by creating and acquiring power management locks.

For example:

- Driver for a peripheral clocked from APB can request the APB frequency to be set to 80 MHz while the peripheral is used.
- RTOS can request the CPU to run at the highest configured frequency while there are tasks ready to run.
- A peripheral driver may need interrupts to be enabled, which means it will have to request disabling light sleep.

Since requesting higher APB or CPU frequencies or disabling light sleep causes higher current consumption, please keep the usage of power management locks by components to a minimum.

Configuration

Power management can be enabled at compile time, using the option *CONFIG_PM_ENABLE*.

Enabling power management features comes at the cost of increased interrupt latency. Extra latency depends on a number of factors, such as the CPU frequency, single/dual core mode, whether or not frequency switch needs to be done. Minimum extra latency is 0.2 us (when the CPU frequency is 240 MHz and frequency scaling is not enabled). Maximum extra latency is 40 us (when frequency scaling is enabled, and a switch from 40 MHz to 80 MHz is performed on interrupt entry).

Dynamic frequency scaling (DFS) and automatic light sleep can be enabled in an application by calling the function `esp_pm_configure()`. Its argument is a structure defining the frequency scaling settings, `esp_pm_config_esp32_t`. In this structure, three fields need to be initialized:

- `max_freq_mhz`: Maximum CPU frequency in MHz, i.e., the frequency used when the `ESP_PM_CPU_FREQ_MAX` lock is acquired. This field will usually be set to the default CPU frequency.
- `min_freq_mhz`: Minimum CPU frequency in MHz, i.e., the frequency used when only the `ESP_PM_APB_FREQ_MAX` lock is acquired. This field can be set to the XTAL frequency value, or the XTAL frequency divided by an integer. Note that 10 MHz is the lowest frequency at which the default REF_TICK clock of 1 MHz can be generated.

- `light_sleep_enable`: Whether the system should automatically enter light sleep when no locks are acquired (`true`/`false`).
  Alternatively, if you enable the option *CONFIG_PM_DFS_INIT_AUTO* in menuconfig, the maximum CPU frequency will be determined by the *CONFIG_ESP32_DEFAULT_CPU_FREQ_MHZ* setting, and the minimum CPU frequency will be locked to the XTAL frequency.

Note: Automatic light sleep is based on FreeRTOS Tickless Idle functionality. If automatic light sleep is requested while the option *CONFIG_FREERTOS_USE_TICKLESS_IDLE* is not enabled in menuconfig, `esp_pm_configure()` will return the error *ESP_ERR_NOT_SUPPORTED*.

Note: In light sleep, peripherals are clock gated, and interrupts (from GPIOs and internal peripherals) will not be generated. A wakeup source described in the *Sleep Modes* documentation can be used to trigger wakeup from the light sleep state.

For example, the EXT0 and EXT1 wakeup sources can be used to wake up the chip via a GPIO.

Power Management Locks

Applications have the ability to acquire/release locks in order to control the power management algorithm. When an application acquires a lock, the power management algorithm operation is restricted in a way described below. When the lock is released, such restrictions are removed.

Power management locks have acquire/release counters. If the lock has been acquired a number of times, it needs to be released the same number of times to remove associated restrictions.

ESP32 supports three types of locks described in the table below.

Lock	Description
`ESP_PM_CPU_FREQ_MAX`	Requests CPU frequency to be at the maximum value set with `esp_pm_configure()`. For ESP32, this value can be set to 80 MHz, 160 MHz, or 240 MHz.
`ESP_PM_APB_FREQ_MAX`	Requests the APB frequency to be at the maximum supported value. For ESP32, this is 80 MHz.
`ESP_PM_NO_LIGHT_SLEEP`	Disables automatic switching to light sleep.

ESP32 Power Management Algorithm

The table below shows how CPU and APB frequencies will be switched if dynamic frequency scaling is enabled. You can specify the maximum CPU frequency with either `esp_pm_configure()` or *CONFIG_ESP32_DEFAULT_CPU_FREQ_MHZ*.

Max CPU Frequency Set	Lock Acquisition	CPU and APB Frequncies
240	Any of `ESP_PM_CPU_FREQ_MAX` or `ESP_PM_APB_FREQ_MAX` acquired	CPU: 240 MHz APB: 80 MHz
	None	Min values for both frequencies set with *esp_pm_configure()*
160	`ESP_PM_CPU_FREQ_MAX` acquired	CPU: 160 MHz APB: 80 MHz
	`ESP_PM_APB_FREQ_MAX` acquired, `ESP_PM_CPU_FREQ_MAX` not acquired	CPU: 80 MHz APB: 80 MHz
	None	Min values for both frequencies set with *esp_pm_configure()*
80	Any of `ESP_PM_CPU_FREQ_MAX` or `ESP_PM_APB_FREQ_MAX` acquired	CPU: 80 MHz APB: 80 MHz
	None	Min values for both frequencies set with *esp_pm_configure()*

If none of the locks are acquired, and light sleep is enabled in a call to *esp_pm_configure()*, the system will go into light sleep mode. The duration of light sleep will be determined by:

- FreeRTOS tasks blocked with finite timeouts
- Timers registered with *High resolution timer* APIs

Light sleep duration will be chosen to wake up the chip before the nearest event (task being unblocked, or timer elapses).

To skip unnecessary wake-up you can consider initializing an esp_timer with the *skip_unhandled_events* option as true. Timers with this flag will not wake up the system and it helps to reduce consumption.

Dynamic Frequency Scaling and Peripheral Drivers

When DFS is enabled, the APB frequency can be changed multiple times within a single RTOS tick. The APB frequency change does not affect the operation of some peripherals, while other peripherals may have issues. For example, Timer Group peripheral timers will keep counting, however, the speed at which they count will change proportionally to the APB frequency.

The following peripherals work normally even when the APB frequency is changing:

- **UART**: if REF_TICK is used as a clock source. See *use_ref_tick* member of *uart_config_t*.
- **LEDC**: if REF_TICK is used as a clock source. See *ledc_timer_config()* function.
- **RMT**: if REF_TICK or XTAL is used as a clock source. See *flags* member of *rmt_config_t* and macro *RMT_CHANNEL_FLAGS_AWARE_DFS*.

Currently, the following peripheral drivers are aware of DFS and will use the `ESP_PM_APB_FREQ_MAX` lock for the duration of the transaction:

- SPI master
- I2C
- I2S (If the APLL clock is used, then it will use the `ESP_PM_NO_LIGHT_SLEEP` lock)
- SDMMC

The following drivers will hold the `ESP_PM_APB_FREQ_MAX` lock while the driver is enabled:

- **SPI slave**: between calls to *`spi_slave_initialize()`* and *`spi_slave_free()`*.
- **Ethernet**: between calls to *`esp_eth_driver_install()`* and *`esp_eth_driver_uninstall()`*.
- **WiFi**: between calls to *`esp_wifi_start()`* and *`esp_wifi_stop()`*. If modem sleep is enabled, the lock will be released for the periods of time when radio is disabled.
- **TWAI**: between calls to *`twai_driver_install()`* and *`twai_driver_uninstall()`*.
- **Bluetooth**: between calls to *`esp_bt_controller_enable()`* and *`esp_bt_controller_disable()`*. If Bluetooth modem sleep is enabled, the `ESP_PM_APB_FREQ_MAX` lock will be released for the periods of time when radio is disabled. However the `ESP_PM_NO_LIGHT_SLEEP` lock will still be held, unless *CONFIG_BTDM_CTRL_LOW_POWER_CLOCK* option is set to "External 32kHz crystal".

The following peripheral drivers are not aware of DFS yet. Applications need to acquire/release locks themselves, when necessary:

- PCNT
- Sigma-delta
- Timer group
- MCPWM

API Reference

Header File

- components/esp_pm/include/esp_pm.h

Functions

esp_err_t **esp_pm_configure**(const void *config)

Set implementation-specific power management configuration.

Parameters **config** – pointer to implementation-specific configuration structure (e.g. esp_pm_config_esp32)

Returns

- ESP_OK on success
- ESP_ERR_INVALID_ARG if the configuration values are not correct
- ESP_ERR_NOT_SUPPORTED if certain combination of values is not supported, or if CONFIG_PM_ENABLE is not enabled in sdkconfig

esp_err_t **esp_pm_get_configuration**(void *config)

Get implementation-specific power management configuration.

Parameters **config** – pointer to implementation-specific configuration structure (e.g. esp_pm_config_esp32)

Returns

- ESP_OK on success
- ESP_ERR_INVALID_ARG if the pointer is null

esp_err_t **esp_pm_lock_create**(*esp_pm_lock_type_t* lock_type, int arg, const char *name, *esp_pm_lock_handle_t* *out_handle)

Initialize a lock handle for certain power management parameter.

When lock is created, initially it is not taken. Call esp_pm_lock_acquire to take the lock.

This function must not be called from an ISR.

Parameters

- **lock_type** –Power management constraint which the lock should control
- **arg** –argument, value depends on lock_type, see esp_pm_lock_type_t
- **name** –arbitrary string identifying the lock (e.g. "wifi" or "spi"). Used by the esp_pm_dump_locks function to list existing locks. May be set to NULL. If not set to NULL, must point to a string which is valid for the lifetime of the lock.
- **out_handle** –**[out]** handle returned from this function. Use this handle when calling esp_pm_lock_delete, esp_pm_lock_acquire, esp_pm_lock_release. Must not be NULL.

Returns

- ESP_OK on success
- ESP_ERR_NO_MEM if the lock structure can not be allocated
- ESP_ERR_INVALID_ARG if out_handle is NULL or type argument is not valid
- ESP_ERR_NOT_SUPPORTED if CONFIG_PM_ENABLE is not enabled in sdkconfig

esp_err_t **esp_pm_lock_acquire**(*esp_pm_lock_handle_t* handle)

Take a power management lock.

Once the lock is taken, power management algorithm will not switch to the mode specified in a call to esp_pm_lock_create, or any of the lower power modes (higher numeric values of 'mode').

The lock is recursive, in the sense that if esp_pm_lock_acquire is called a number of times, esp_pm_lock_release has to be called the same number of times in order to release the lock.

This function may be called from an ISR.

This function is not thread-safe w.r.t. calls to other esp_pm_lock_* functions for the same handle.

Parameters **handle** –handle obtained from esp_pm_lock_create function

Returns

- ESP_OK on success
- ESP_ERR_INVALID_ARG if the handle is invalid
- ESP_ERR_NOT_SUPPORTED if CONFIG_PM_ENABLE is not enabled in sdkconfig

esp_err_t **esp_pm_lock_release**(*esp_pm_lock_handle_t* handle)

Release the lock taken using esp_pm_lock_acquire.

Call to this functions removes power management restrictions placed when taking the lock.

Locks are recursive, so if esp_pm_lock_acquire is called a number of times, esp_pm_lock_release has to be called the same number of times in order to actually release the lock.

This function may be called from an ISR.

This function is not thread-safe w.r.t. calls to other esp_pm_lock_* functions for the same handle.

Parameters **handle** –handle obtained from esp_pm_lock_create function

Returns

- ESP_OK on success
- ESP_ERR_INVALID_ARG if the handle is invalid
- ESP_ERR_INVALID_STATE if lock is not acquired
- ESP_ERR_NOT_SUPPORTED if CONFIG_PM_ENABLE is not enabled in sdkconfig

esp_err_t **esp_pm_lock_delete**(*esp_pm_lock_handle_t* handle)

Delete a lock created using esp_pm_lock.

The lock must be released before calling this function.

This function must not be called from an ISR.

Parameters **handle** –handle obtained from esp_pm_lock_create function

Returns

- ESP_OK on success
- ESP_ERR_INVALID_ARG if the handle argument is NULL
- ESP_ERR_INVALID_STATE if the lock is still acquired

- ESP_ERR_NOT_SUPPORTED if CONFIG_PM_ENABLE is not enabled in sdkconfig

esp_err_t **esp_pm_dump_locks**(FILE *stream)

Dump the list of all locks to stderr

This function dumps debugging information about locks created using esp_pm_lock_create to an output stream.

This function must not be called from an ISR. If esp_pm_lock_acquire/release are called while this function is running, inconsistent results may be reported.

Parameters **stream** – stream to print information to; use stdout or stderr to print to the console; use fmemopen/open_memstream to print to a string buffer.

Returns

- ESP_OK on success
- ESP_ERR_NOT_SUPPORTED if CONFIG_PM_ENABLE is not enabled in sdkconfig

Type Definitions

typedef struct esp_pm_lock ***esp_pm_lock_handle_t**

Opaque handle to the power management lock.

Enumerations

enum **esp_pm_lock_type_t**

Power management constraints.

Values:

enumerator **ESP_PM_CPU_FREQ_MAX**

Require CPU frequency to be at the maximum value set via esp_pm_configure. Argument is unused and should be set to 0.

enumerator **ESP_PM_APB_FREQ_MAX**

Require APB frequency to be at the maximum value supported by the chip. Argument is unused and should be set to 0.

enumerator **ESP_PM_NO_LIGHT_SLEEP**

Prevent the system from going into light sleep. Argument is unused and should be set to 0.

Header File

- components/esp_pm/include/esp32/pm.h

Structures

struct **esp_pm_config_esp32_t**

Power management config for ESP32.

Pass a pointer to this structure as an argument to esp_pm_configure function.

Public Members

int **max_freq_mhz**

Maximum CPU frequency, in MHz

int **min_freq_mhz**

Minimum CPU frequency to use when no locks are taken, in MHz

bool **light_sleep_enable**

Enter light sleep when no locks are taken

2.7.23 Random Number Generation

ESP32 contains a hardware random number generator, values from it can be obtained using the APIs `esp_random()` and `esp_fill_random()`.

The hardware RNG produces true random numbers under any of the following conditions:

- RF subsystem is enabled (i.e. Wi-Fi or Bluetooth are enabled).
- An internal entropy source has been enabled by calling `bootloader_random_enable()` and not yet disabled by calling `bootloader_random_disable()`.
- While the ESP-IDF *Second stage bootloader* is running. This is because the default ESP-IDF bootloader implementation calls `bootloader_random_enable()` when the bootloader starts, and `bootloader_random_disable()` before executing the app.

When any of these conditions are true, samples of physical noise are continuously mixed into the internal hardware RNG state to provide entropy. Consult the *ESP32 Technical Reference Manual* > *Random Number Generator (RNG)* [PDF] chapter for more details.

If none of the above conditions are true, the output of the RNG should be considered pseudo-random only.

Startup

During startup, ESP-IDF bootloader temporarily enables a non-RF entropy source (internal reference voltage noise) that provides entropy for any first boot key generation. However, after the app starts executing then normally only pseudo-random numbers are available until Wi-Fi or Bluetooth are initialized.

To re-enable the entropy source temporarily during app startup, or for an application that does not use Wi-Fi or Bluetooth, call the function `bootloader_random_enable()` to re-enable the internal entropy source. The function `bootloader_random_disable()` must be called to disable the entropy source again before using ADC, I2S, Wi-Fi or Bluetooth.

Note: The entropy source enabled during the boot process by the ESP-IDF Second Stage Bootloader will seed the internal RNG state with some entropy. However, the internal hardware RNG state is not large enough to provide a continuous stream of true random numbers. This is why a continuous entropy source must be enabled whenever true random numbers are required.

Note: If an application requires a source of true random numbers but it is not possible to permanently enable a hardware entropy source, consider using a strong software DRBG implementation such as the mbedTLS CTR-DRBG or HMAC-DRBG, with an initial seed of entropy from hardware RNG true random numbers.

API Reference

Header File

- components/esp_hw_support/include/esp_random.h

Functions

uint32_t **esp_random**(void)

Get one random 32-bit word from hardware RNG.

If Wi-Fi or Bluetooth are enabled, this function returns true random numbers. In other situations, if true random numbers are required then consult the ESP-IDF Programming Guide "Random Number Generation" section for necessary prerequisites.

This function automatically busy-waits to ensure enough external entropy has been introduced into the hardware RNG state, before returning a new random number. This delay is very short (always less than 100 CPU cycles).

Returns Random value between 0 and UINT32_MAX

void **esp_fill_random**(void *buf, size_t len)

Fill a buffer with random bytes from hardware RNG.

Note: This function is implemented via calls to esp_random(), so the same constraints apply.

Parameters

- **buf** –Pointer to buffer to fill with random numbers.
- **len** –Length of buffer in bytes

Header File

- components/bootloader_support/include/bootloader_random.h

Functions

void **bootloader_random_enable**(void)

Enable an entropy source for RNG if RF is disabled.

The exact internal entropy source mechanism depends on the chip in use but all SoCs use the SAR ADC to continuously mix random bits (an internal noise reading) into the HWRNG. Consult the SoC Technical Reference Manual for more information.

Can also be used from app code early during operation, if true random numbers are required before RF is initialised. Consult ESP-IDF Programming Guide "Random Number Generation" section for details.

void **bootloader_random_disable**(void)

Disable entropy source for RNG.

Disables internal entropy source. Must be called after bootloader_random_enable() and before RF features, ADC, or I2S (ESP32 only) are initialized.

Consult the ESP-IDF Programming Guide "Random Number Generation" section for details.

void **bootloader_fill_random**(void *buffer, size_t length)

Fill buffer with 'length' random bytes.

Note: If this function is being called from app code only, and never from the bootloader, then it's better to call esp_fill_random().

Parameters

- **buffer** –Pointer to buffer
- **length** –This many bytes of random data will be copied to buffer

getrandom

A compatible version of the Linux `getrandom()` function is also provided for ease of porting:

```
#include <sys/random.h>

ssize_t getrandom(void *buf, size_t buflen, unsigned int flags);
```

This function is implemented by calling *esp_fill_random()* internally.

The `flags` argument is ignored, this function is always non-blocking but the strength of any random numbers is dependent on the same conditions described above.

Return value is -1 (with `errno` set to `EFAULT`) if the `buf` argument is NULL, and equal to `buflen` otherwise.

2.7.24 Sleep Modes

Overview

ESP32 is capable of light sleep and deep sleep power saving modes.

In light sleep mode, digital peripherals, most of the RAM, and CPUs are clock-gated, and supply voltage is reduced. Upon exit from light sleep, peripherals and CPUs resume operation, their internal state is preserved.

In deep sleep mode, CPUs, most of the RAM, and all the digital peripherals which are clocked from APB_CLK are powered off. The only parts of the chip which can still be powered on are:

- RTC controller
- RTC peripherals
- ULP coprocessor
- RTC fast memory
- RTC slow memory

Wakeup from deep and light sleep modes can be done using several sources. These sources can be combined, in this case the chip will wake up when any one of the sources is triggered. Wakeup sources can be enabled using `esp_sleep_enable_X_wakeup` APIs and can be disabled using *esp_sleep_disable_wakeup_source()* API. Next section describes these APIs in detail. Wakeup sources can be configured at any moment before entering light or deep sleep mode.

Additionally, the application can force specific powerdown modes for the RTC peripherals and RTC memories using *esp_sleep_pd_config()* API.

Once wakeup sources are configured, application can enter sleep mode using *esp_light_sleep_start()* or *esp_deep_sleep_start()* APIs. At this point the hardware will be configured according to the requested wakeup sources, and RTC controller will either power down or power off the CPUs and digital peripherals.

If WiFi connection needs to be maintained, enable WiFi modem sleep, and enable automatic light sleep feature (see *Power Management APIs*). This will allow the system to wake up from sleep automatically when required by WiFi driver, thereby maintaining connection to the AP.

WiFi/BT and sleep modes

In deep sleep and light sleep modes, wireless peripherals are powered down. Before entering deep sleep or light sleep modes, applications must disable WiFi and BT using appropriate calls (*esp_bluedroid_disable()*, *esp_bt_controller_disable()*, *esp_wifi_stop()*). WiFi and BT connections will not be maintained in deep sleep or light sleep, even if these functions are not called.

Wakeup sources

Timer RTC controller has a built in timer which can be used to wake up the chip after a predefined amount of time. Time is specified at microsecond precision, but the actual resolution depends on the clock source selected for RTC SLOW_CLK.

For details on RTC clock options, see *ESP32 Technical Reference Manual* > *ULP Coprocessor* [PDF].

This wakeup mode doesn't require RTC peripherals or RTC memories to be powered on during sleep.

esp_sleep_enable_timer_wakeup() function can be used to enable deep sleep wakeup using a timer.

Touch pad RTC IO module contains logic to trigger wakeup when a touch sensor interrupt occurs. You need to configure the touch pad interrupt before the chip starts deep sleep.

Revisions 0 and 1 of the ESP32 only support this wakeup mode when RTC peripherals are not forced to be powered on (i.e. ESP_PD_DOMAIN_RTC_PERIPH should be set to ESP_PD_OPTION_AUTO).

esp_sleep_enable_touchpad_wakeup() function can be used to enable this wakeup source.

External wakeup (ext0) RTC IO module contains logic to trigger wakeup when one of RTC GPIOs is set to a predefined logic level. RTC IO is part of RTC peripherals power domain, so RTC peripherals will be kept powered on during deep sleep if this wakeup source is requested.

Because RTC IO module is enabled in this mode, internal pullup or pulldown resistors can also be used. They need to be configured by the application using *rtc_gpio_pullup_en()* and *rtc_gpio_pulldown_en()* functions, before calling `esp_sleep_start()`.

In revisions 0 and 1 of the ESP32, this wakeup source is incompatible with ULP and touch wakeup sources.

esp_sleep_enable_ext0_wakeup() function can be used to enable this wakeup source.

Warning: After wake up from sleep, IO pad used for wakeup will be configured as RTC IO. Before using this pad as digital GPIO, reconfigure it using `rtc_gpio_deinit(gpio_num)` function.

External wakeup (ext1) RTC controller contains logic to trigger wakeup using multiple RTC GPIOs. One of the two logic functions can be used to trigger wakeup:

- wake up if any of the selected pins is high (`ESP_EXT1_WAKEUP_ANY_HIGH`)
- wake up if all the selected pins are low (`ESP_EXT1_WAKEUP_ALL_LOW`)

This wakeup source is implemented by the RTC controller. As such, RTC peripherals and RTC memories can be powered down in this mode. However, if RTC peripherals are powered down, internal pullup and pulldown resistors will be disabled. To use internal pullup or pulldown resistors, request RTC peripherals power domain to be kept on during sleep, and configure pullup/pulldown resistors using `rtc_gpio_` functions, before entering sleep:

```
esp_sleep_pd_config(ESP_PD_DOMAIN_RTC_PERIPH, ESP_PD_OPTION_ON);
gpio_pullup_dis(gpio_num);
gpio_pulldown_en(gpio_num);
```

Warning: After wake up from sleep, IO pad(s) used for wakeup will be configured as RTC IO. Before using these pads as digital GPIOs, reconfigure them using `rtc_gpio_deinit(gpio_num)` function.

esp_sleep_enable_ext1_wakeup() function can be used to enable this wakeup source.

ULP coprocessor wakeup ULP coprocessor can run while the chip is in sleep mode, and may be used to poll sensors, monitor ADC or touch sensor values, and wake up the chip when a specific event is detected. ULP coprocessor is part of RTC peripherals power domain, and it runs the program stored in RTC slow memory. RTC slow memory will be powered on during sleep if this wakeup mode is requested. RTC peripherals will be automatically powered on before ULP coprocessor starts running the program; once the program stops running, RTC peripherals are automatically powered down again.

Revisions 0 and 1 of the ESP32 only support this wakeup mode when RTC peripherals are not forced to be powered on (i.e. ESP_PD_DOMAIN_RTC_PERIPH should be set to ESP_PD_OPTION_AUTO).

esp_sleep_enable_ulp_wakeup() function can be used to enable this wakeup source.

GPIO wakeup (light sleep only) In addition to EXT0 and EXT1 wakeup sources described above, one more method of wakeup from external inputs is available in light sleep mode. With this wakeup source, each pin can be individually configured to trigger wakeup on high or low level using *gpio_wakeup_enable()* function. Unlike EXT0 and EXT1 wakeup sources, which can only be used with RTC IOs, this wakeup source can be used with any IO (RTC or digital).

esp_sleep_enable_gpio_wakeup() function can be used to enable this wakeup source.

Warning: Before entering light sleep mode, check if any GPIO pin to be driven is part of the VDD_SDIO power domain. If so, this power domain must be configured to remain ON during sleep.

For example, on ESP32-WROOM-32 board, GPIO16 and GPIO17 are linked to VDD_SDIO power domain. If they are configured to remain high during light sleep, the power domain should be configured to remain powered ON. This can be done with *esp_sleep_pd_config()*:

```
esp_sleep_pd_config(ESP_PD_DOMAIN_VDDSDIO, ESP_PD_OPTION_ON);
```

UART wakeup (light sleep only) When ESP32 receives UART input from external devices, it is often required to wake up the chip when input data is available. UART peripheral contains a feature which allows waking up the chip from light sleep when a certain number of positive edges on RX pin are seen. This number of positive edges can be set using *uart_set_wakeup_threshold()* function. Note that the character which triggers wakeup (and any characters before it) will not be received by the UART after wakeup. This means that the external device typically needs to send an extra character to the ESP32 to trigger wakeup, before sending the data.

esp_sleep_enable_uart_wakeup() function can be used to enable this wakeup source.

Power-down of RTC peripherals and memories

By default, *esp_deep_sleep_start()* and *esp_light_sleep_start()* functions will power down all RTC power domains which are not needed by the enabled wakeup sources. To override this behaviour, *esp_sleep_pd_config()* function is provided.

Note: in revision 0 of the ESP32, RTC fast memory will always be kept enabled in deep sleep, so that the deep sleep stub can run after reset. This can be overridden, if the application doesn't need clean reset behaviour after deep sleep.

If some variables in the program are placed into RTC slow memory (for example, using `RTC_DATA_ATTR` attribute), RTC slow memory will be kept powered on by default. This can be overridden using *esp_sleep_pd_config()* function, if desired.

Power-down of Flash

By default, to avoid potential issues, *esp_light_sleep_start()* function will **not** power down flash. To be more specific, it takes time to power down the flash and during this period the system may be woken up, which then

actually powers up the flash before this flash could be powered down completely. As a result, there is a chance that the flash may not work properly.

So, in theory, it's ok if you only wake up the system after the flash is completely powered down. However, in reality, the flash power-down period can be hard to predict (for example, this period can be much longer when you add filter capacitors to the flash's power supply circuit) and uncontrollable (for example, the asynchronous wake-up signals make the actual sleep time uncontrollable).

Warning: If a filter capacitor is added to your flash power supply circuit, please do everything possible to avoid powering down flash.

Therefore, it's recommended not to power down flash when using ESP-IDF. For power-sensitive applications, it's recommended to use Kconfig option *CONFIG_ESP_SLEEP_FLASH_LEAKAGE_WORKAROUND* to reduce the power consumption of the flash during light sleep, instead of powering down the flash.

It is worth mentioning that PSRAM has a similar Kconfig option *CONFIG_ESP_SLEEP_PSRAM_LEAKAGE_WORKAROUND*.

However, for those who have fully understood the risk and are still willing to power down the flash to further reduce the power consumption, please check the following mechanisms:

- Setting Kconfig option *CONFIG_ESP_SLEEP_POWER_DOWN_FLASH* only powers down the flash when the RTC timer is the only wake-up source **and** the sleep time is longer than the flash power-down period.
- Calling `esp_sleep_pd_config(ESP_PD_DOMAIN_VDDSDIO, ESP_PD_OPTION_OFF)` powers down flash when the RTC timer is not enabled as a wakeup source **or** the sleep time is longer than the flash power-down period.

Note:

- ESP-IDF does not provide any mechanism that can power down the flash in all conditions when light sleep.
- *esp_deep_sleep_start()* function will force power down flash regardless of user configuration.

Entering light sleep

esp_light_sleep_start() function can be used to enter light sleep once wakeup sources are configured. It is also possible to go into light sleep with no wakeup sources configured, in this case the chip will be in light sleep mode indefinitely, until external reset is applied.

Entering deep sleep

esp_deep_sleep_start() function can be used to enter deep sleep once wakeup sources are configured. It is also possible to go into deep sleep with no wakeup sources configured, in this case the chip will be in deep sleep mode indefinitely, until external reset is applied.

Configuring IOs

Some ESP32 IOs have internal pullups or pulldowns, which are enabled by default. If an external circuit drives this pin in deep sleep mode, current consumption may increase due to current flowing through these pullups and pulldowns.

To isolate a pin, preventing extra current draw, call *rtc_gpio_isolate()* function.

For example, on ESP32-WROVER module, GPIO12 is pulled up externally. GPIO12 also has an internal pull-down in the ESP32 chip. This means that in deep sleep, some current will flow through these external and internal resistors, increasing deep sleep current above the minimal possible value. Add the following code before *esp_deep_sleep_start()* to remove this extra current:

```
rtc_gpio_isolate(GPIO_NUM_12);
```

UART output handling

Before entering sleep mode, *esp_deep_sleep_start()* will flush the contents of UART FIFOs.

When entering light sleep mode using *esp_light_sleep_start()*, UART FIFOs will not be flushed. Instead, UART output will be suspended, and remaining characters in the FIFO will be sent out after wakeup from light sleep.

Checking sleep wakeup cause

esp_sleep_get_wakeup_cause() function can be used to check which wakeup source has triggered wakeup from sleep mode.

For touch pad, it is possible to identify touch pad which has caused wakeup using *esp_sleep_get_touchpad_wakeup_status()* functions.

For ext1 wakeup sources, it is possible to identify pin which has caused wakeup using *esp_sleep_get_ext1_wakeup_status()* functions.

Disable sleep wakeup source

Previously configured wakeup source can be disabled later using *esp_sleep_disable_wakeup_source()* API. This function deactivates trigger for the given wakeup source. Additionally it can disable all triggers if the argument is `ESP_SLEEP_WAKEUP_ALL`.

Application Example

Implementation of basic functionality of deep sleep is shown in protocols/sntp example, where ESP module is periodically waken up to retrieve time from NTP server.

More extensive example in system/deep_sleep illustrates usage of various deep sleep wakeup triggers and ULP co-processor programming.

API Reference

Header File

- components/esp_hw_support/include/esp_sleep.h

Functions

esp_err_t **esp_sleep_disable_wakeup_source**(*esp_sleep_source_t* source)

Disable wakeup source.

This function is used to deactivate wake up trigger for source defined as parameter of the function.

See docs/sleep-modes.rst for details.

Note: This function does not modify wake up configuration in RTC. It will be performed in esp_sleep_start function.

Parameters **source** –- number of source to disable of type esp_sleep_source_t

Returns

- ESP_OK on success
- ESP_ERR_INVALID_STATE if trigger was not active

esp_err_t **esp_sleep_enable_ulp_wakeup**(void)

Enable wakeup by ULP coprocessor.

Note: In revisions 0 and 1 of the ESP32, ULP wakeup source cannot be used when RTC_PERIPH power domain is forced to be powered on (ESP_PD_OPTION_ON) or when ext0 wakeup source is used.

Returns

- ESP_OK on success
- ESP_ERR_NOT_SUPPORTED if additional current by touch (CONFIG_ESP32_RTC_EXT_CRYST_ADDIT_CURRENT) is enabled.
- ESP_ERR_INVALID_STATE if ULP co-processor is not enabled or if wakeup triggers conflict

esp_err_t **esp_sleep_enable_timer_wakeup**(uint64_t time_in_us)

Enable wakeup by timer.

Parameters **time_in_us** –time before wakeup, in microseconds

Returns

- ESP_OK on success
- ESP_ERR_INVALID_ARG if value is out of range (TBD)

esp_err_t **esp_sleep_enable_touchpad_wakeup**(void)

Enable wakeup by touch sensor.

Note: In revisions 0 and 1 of the ESP32, touch wakeup source can not be used when RTC_PERIPH power domain is forced to be powered on (ESP_PD_OPTION_ON) or when ext0 wakeup source is used.

Note: The FSM mode of the touch button should be configured as the timer trigger mode.

Returns

- ESP_OK on success
- ESP_ERR_NOT_SUPPORTED if additional current by touch (CONFIG_ESP32_RTC_EXT_CRYST_ADDIT_CURRENT) is enabled.
- ESP_ERR_INVALID_STATE if wakeup triggers conflict

touch_pad_t **esp_sleep_get_touchpad_wakeup_status**(void)

Get the touch pad which caused wakeup.

If wakeup was caused by another source, this function will return TOUCH_PAD_MAX;

Returns touch pad which caused wakeup

bool **esp_sleep_is_valid_wakeup_gpio**(*gpio_num_t* gpio_num)

Returns true if a GPIO number is valid for use as wakeup source.

Note: For SoCs with RTC IO capability, this can be any valid RTC IO input pin.

Parameters **gpio_num** –Number of the GPIO to test for wakeup source capability
Returns True if this GPIO number will be accepted as a sleep wakeup source.

esp_err_t **esp_sleep_enable_ext0_wakeup**(*gpio_num_t* gpio_num, int level)

Enable wakeup using a pin.

This function uses external wakeup feature of RTC_IO peripheral. It will work only if RTC peripherals are kept on during sleep.

This feature can monitor any pin which is an RTC IO. Once the pin transitions into the state given by level argument, the chip will be woken up.

Note: This function does not modify pin configuration. The pin is configured in esp_sleep_start, immediately before entering sleep mode.

Note: In revisions 0 and 1 of the ESP32, ext0 wakeup source can not be used together with touch or ULP wakeup sources.

Parameters

- **gpio_num** –GPIO number used as wakeup source. Only GPIOs which are have RTC functionality can be used: 0,2,4,12-15,25-27,32-39.
- **level** –input level which will trigger wakeup (0=low, 1=high)

Returns

- ESP_OK on success
- ESP_ERR_INVALID_ARG if the selected GPIO is not an RTC GPIO, or the mode is invalid
- ESP_ERR_INVALID_STATE if wakeup triggers conflict

esp_err_t **esp_sleep_enable_ext1_wakeup**(uint64_t mask, *esp_sleep_ext1_wakeup_mode_t* mode)

Enable wakeup using multiple pins.

This function uses external wakeup feature of RTC controller. It will work even if RTC peripherals are shut down during sleep.

This feature can monitor any number of pins which are in RTC IOs. Once any of the selected pins goes into the state given by mode argument, the chip will be woken up.

Note: This function does not modify pin configuration. The pins are configured in esp_sleep_start, immediately before entering sleep mode.

Note: internal pullups and pulldowns don't work when RTC peripherals are shut down. In this case, external resistors need to be added. Alternatively, RTC peripherals (and pullups/pulldowns) may be kept enabled using esp_sleep_pd_config function.

Parameters

- **mask** –bit mask of GPIO numbers which will cause wakeup. Only GPIOs which are have RTC functionality can be used in this bit map: 0,2,4,12-15,25-27,32-39.
- **mode** –select logic function used to determine wakeup condition:
  - ESP_EXT1_WAKEUP_ALL_LOW: wake up when all selected GPIOs are low
  - ESP_EXT1_WAKEUP_ANY_HIGH: wake up when any of the selected GPIOs is high

Returns
- ESP_OK on success
- ESP_ERR_INVALID_ARG if any of the selected GPIOs is not an RTC GPIO, or mode is invalid

esp_err_t **esp_sleep_enable_gpio_wakeup**(void)

Enable wakeup from light sleep using GPIOs.

Each GPIO supports wakeup function, which can be triggered on either low level or high level. Unlike EXT0 and EXT1 wakeup sources, this method can be used both for all IOs: RTC IOs and digital IOs. It can only be used to wakeup from light sleep though.

To enable wakeup, first call gpio_wakeup_enable, specifying gpio number and wakeup level, for each GPIO which is used for wakeup. Then call this function to enable wakeup feature.

Note: In revisions 0 and 1 of the ESP32, GPIO wakeup source can not be used together with touch or ULP wakeup sources.

Returns
- ESP_OK on success
- ESP_ERR_INVALID_STATE if wakeup triggers conflict

esp_err_t **esp_sleep_enable_uart_wakeup**(int uart_num)

Enable wakeup from light sleep using UART.

Use uart_set_wakeup_threshold function to configure UART wakeup threshold.

Wakeup from light sleep takes some time, so not every character sent to the UART can be received by the application.

Note: ESP32 does not support wakeup from UART2.

Parameters **uart_num** –UART port to wake up from

Returns
- ESP_OK on success
- ESP_ERR_INVALID_ARG if wakeup from given UART is not supported

esp_err_t **esp_sleep_enable_wifi_wakeup**(void)

Enable wakeup by WiFi MAC.

Returns
- ESP_OK on success

esp_err_t **esp_sleep_disable_wifi_wakeup**(void)

Disable wakeup by WiFi MAC.

Returns
- ESP_OK on success

uint64_t **esp_sleep_get_ext1_wakeup_status**(void)

Get the bit mask of GPIOs which caused wakeup (ext1)

If wakeup was caused by another source, this function will return 0.

Returns bit mask, if GPIOn caused wakeup, BIT(n) will be set

esp_err_t **esp_sleep_pd_config**(*esp_sleep_pd_domain_t* domain, *esp_sleep_pd_option_t* option)

Set power down mode for an RTC power domain in sleep mode.

If not set set using this API, all power domains default to ESP_PD_OPTION_AUTO.

Parameters
- **domain** –power domain to configure
- **option** –power down option (ESP_PD_OPTION_OFF, ESP_PD_OPTION_ON, or ESP_PD_OPTION_AUTO)

Returns
- ESP_OK on success
- ESP_ERR_INVALID_ARG if either of the arguments is out of range

void **esp_deep_sleep_start**(void)

Enter deep sleep with the configured wakeup options.

This function does not return.

esp_err_t **esp_light_sleep_start**(void)

Enter light sleep with the configured wakeup options.

Returns
- ESP_OK on success (returned after wakeup)
- ESP_ERR_INVALID_STATE if WiFi or BT is not stopped

void **esp_deep_sleep**(uint64_t time_in_us)

Enter deep-sleep mode.

The device will automatically wake up after the deep-sleep time Upon waking up, the device calls deep sleep wake stub, and then proceeds to load application.

Call to this function is equivalent to a call to esp_deep_sleep_enable_timer_wakeup followed by a call to esp_deep_sleep_start.

esp_deep_sleep does not shut down WiFi, BT, and higher level protocol connections gracefully. Make sure relevant WiFi and BT stack functions are called to close any connections and deinitialize the peripherals. These include:

- esp_bluedroid_disable
- esp_bt_controller_disable
- esp_wifi_stop

This function does not return.

Note: The device will wake up immediately if the deep-sleep time is set to 0

Parameters **time_in_us** –deep-sleep time, unit: microsecond

esp_sleep_wakeup_cause_t **esp_sleep_get_wakeup_cause**(void)

Get the wakeup source which caused wakeup from sleep.

Returns cause of wake up from last sleep (deep sleep or light sleep)

void **esp_wake_deep_sleep**(void)

Default stub to run on wake from deep sleep.

Allows for executing code immediately on wake from sleep, before the software bootloader or ESP-IDF app has started up.

This function is weak-linked, so you can implement your own version to run code immediately when the chip wakes from sleep.

See docs/deep-sleep-stub.rst for details.

void **esp_set_deep_sleep_wake_stub**(*esp_deep_sleep_wake_stub_fn_t* new_stub)

Install a new stub at runtime to run on wake from deep sleep.

If implementing esp_wake_deep_sleep() then it is not necessary to call this function.

However, it is possible to call this function to substitute a different deep sleep stub. Any function used as a deep sleep stub must be marked RTC_IRAM_ATTR, and must obey the same rules given for esp_wake_deep_sleep().

esp_deep_sleep_wake_stub_fn_t **esp_get_deep_sleep_wake_stub**(void)

Get current wake from deep sleep stub.

Returns Return current wake from deep sleep stub, or NULL if no stub is installed.

void **esp_default_wake_deep_sleep**(void)

The default esp-idf-provided esp_wake_deep_sleep() stub.

See docs/deep-sleep-stub.rst for details.

void **esp_deep_sleep_disable_rom_logging**(void)

Disable logging from the ROM code after deep sleep.

Using LSB of RTC_STORE4.

void **esp_sleep_config_gpio_isolate**(void)

Configure to isolate all GPIO pins in sleep state.

void **esp_sleep_enable_gpio_switch**(bool enable)

Enable or disable GPIO pins status switching between slept status and waked status.

Parameters **enable** –decide whether to switch status or not

Type Definitions

typedef *esp_sleep_source_t* **esp_sleep_wakeup_cause_t**

typedef void (***esp_deep_sleep_wake_stub_fn_t**)(void)

Function type for stub to run on wake from sleep.

Enumerations

enum **esp_sleep_ext1_wakeup_mode_t**

Logic function used for EXT1 wakeup mode.

Values:

enumerator **ESP_EXT1_WAKEUP_ALL_LOW**

Wake the chip when all selected GPIOs go low.

enumerator **ESP_EXT1_WAKEUP_ANY_HIGH**

Wake the chip when any of the selected GPIOs go high.

enum **esp_sleep_pd_domain_t**

Power domains which can be powered down in sleep mode.

Values:

enumerator **ESP_PD_DOMAIN_RTC_PERIPH**

RTC IO, sensors and ULP co-processor.

enumerator **ESP_PD_DOMAIN_RTC_SLOW_MEM**

RTC slow memory.

enumerator **ESP_PD_DOMAIN_RTC_FAST_MEM**

RTC fast memory.

enumerator **ESP_PD_DOMAIN_XTAL**

XTAL oscillator.

enumerator **ESP_PD_DOMAIN_RTC8M**

Internal 8M oscillator.

enumerator **ESP_PD_DOMAIN_VDDSDIO**

VDD_SDIO.

enumerator **ESP_PD_DOMAIN_MAX**

Number of domains.

enum **esp_sleep_pd_option_t**

Power down options.

Values:

enumerator **ESP_PD_OPTION_OFF**

Power down the power domain in sleep mode.

enumerator **ESP_PD_OPTION_ON**

Keep power domain enabled during sleep mode.

enumerator **ESP_PD_OPTION_AUTO**

Keep power domain enabled in sleep mode, if it is needed by one of the wakeup options. Otherwise power it down.

enum **esp_sleep_source_t**

Sleep wakeup cause.

Values:

enumerator **ESP_SLEEP_WAKEUP_UNDEFINED**

In case of deep sleep, reset was not caused by exit from deep sleep.

enumerator **ESP_SLEEP_WAKEUP_ALL**

Not a wakeup cause, used to disable all wakeup sources with esp_sleep_disable_wakeup_source.

enumerator **ESP_SLEEP_WAKEUP_EXT0**

Wakeup caused by external signal using RTC_IO.

enumerator **ESP_SLEEP_WAKEUP_EXT1**

Wakeup caused by external signal using RTC_CNTL.

enumerator **ESP_SLEEP_WAKEUP_TIMER**

Wakeup caused by timer.

enumerator **ESP_SLEEP_WAKEUP_TOUCHPAD**

Wakeup caused by touchpad.

enumerator **ESP_SLEEP_WAKEUP_ULP**

Wakeup caused by ULP program.

enumerator **ESP_SLEEP_WAKEUP_GPIO**

Wakeup caused by GPIO (light sleep only on ESP32, S2 and S3)

enumerator **ESP_SLEEP_WAKEUP_UART**

Wakeup caused by UART (light sleep only)

enumerator **ESP_SLEEP_WAKEUP_WIFI**

Wakeup caused by WIFI (light sleep only)

enumerator **ESP_SLEEP_WAKEUP_COCPU**

Wakeup caused by COCPU int.

enumerator **ESP_SLEEP_WAKEUP_COCPU_TRAP_TRIG**

Wakeup caused by COCPU crash.

enumerator **ESP_SLEEP_WAKEUP_BT**

Wakeup caused by BT (light sleep only)

2.7.25 Watchdogs

Overview

The ESP-IDF has support for multiple types of watchdogs, with the two main ones being: The Interrupt Watchdog Timer and the Task Watchdog Timer (TWDT). The Interrupt Watchdog Timer and the TWDT can both be enabled using *Project Configuration Menu*, however the TWDT can also be enabled during runtime. The Interrupt Watchdog is responsible for detecting instances where FreeRTOS task switching is blocked for a prolonged period of time. The TWDT is responsible for detecting instances of tasks running without yielding for a prolonged period.

Interrupt watchdog The interrupt watchdog makes sure the FreeRTOS task switching interrupt isn't blocked for a long time. This is bad because no other tasks, including potentially important ones like the WiFi task and the idle task, can't get any CPU runtime. A blocked task switching interrupt can happen because a program runs into an infinite loop with interrupts disabled or hangs in an interrupt.

The default action of the interrupt watchdog is to invoke the panic handler. causing a register dump and an opportunity for the programmer to find out, using either OpenOCD or gdbstub, what bit of code is stuck with interrupts disabled. Depending on the configuration of the panic handler, it can also blindly reset the CPU, which may be preferred in a production environment.

The interrupt watchdog is built around the hardware watchdog in timer group 1. If this watchdog for some reason cannot execute the NMI handler that invokes the panic handler (e.g. because IRAM is overwritten by garbage), it will hard-reset the SOC. If the panic handler executes, it will display the panic reason as "Interrupt wdt timeout on CPU0" or "Interrupt wdt timeout on CPU1" (as applicable).

Configuration The interrupt watchdog is enabled by default via the *CONFIG_ESP_INT_WDT* configuration flag. The timeout is configured by setting *CONFIG_ESP_INT_WDT_TIMEOUT_MS*. The default timeout is higher if PSRAM support is enabled, as a critical section or interrupt routine that accesses a large amount of PSRAM will take longer to complete in some circumstances. The INT WDT timeout should always be longer than the period between FreeRTOS ticks (see *CONFIG_FREERTOS_HZ*).

Tuning If you find the Interrupt watchdog timeout is triggering because an interrupt or critical section is running longer than the timeout period, consider rewriting the code: critical sections should be made as short as possible, with non-critical computation happening outside the critical section. Interrupt handlers should also perform the minimum possible amount of computation, consider pushing data into a queue from the ISR and processing it in a task instead. Neither critical sections or interrupt handlers should ever block waiting for another event to occur.

If changing the code to reduce the processing time is not possible or desirable, it's possible to increase the *CONFIG_ESP_INT_WDT_TIMEOUT_MS* setting instead.

Task Watchdog Timer The Task Watchdog Timer (TWDT) is responsible for detecting instances of tasks running for a prolonged period of time without yielding. This is a symptom of CPU starvation and is usually caused by a higher priority task looping without yielding to a lower-priority task thus starving the lower priority task from CPU time. This can be an indicator of poorly written code that spinloops on a peripheral, or a task that is stuck in an infinite loop.

By default the TWDT will watch the Idle Tasks of each CPU, however any task can subscribe to be watched by the TWDT. Each watched task must 'reset' the TWDT periodically to indicate that they have been allocated CPU time. If a task does not reset within the TWDT timeout period, a warning will be printed with information about which tasks failed to reset the TWDT in time and which tasks are currently running.

It is also possible to redefine the function *esp_task_wdt_isr_user_handler* in the user code, in order to receive the timeout event and handle it differently.

The TWDT is built around the Hardware Watchdog Timer in Timer Group 0. The TWDT can be initialized by calling `esp_task_wdt_init()` which will configure the hardware timer. A task can then subscribe to the TWDT using `esp_task_wdt_add()` in order to be watched. Each subscribed task must periodically call `esp_task_wdt_reset()` to reset the TWDT. Failure by any subscribed tasks to periodically call `esp_task_wdt_reset()` indicates that one or more tasks have been starved of CPU time or are stuck in a loop somewhere.

A watched task can be unsubscribed from the TWDT using `esp_task_wdt_delete()`. A task that has been unsubscribed should no longer call `esp_task_wdt_reset()`. Once all tasks have unsubscribed form the TWDT, the TWDT can be deinitialized by calling `esp_task_wdt_deinit()`.

The default timeout period for the TWDT is set using config item *CONFIG_ESP_TASK_WDT_TIMEOUT_S*. This should be set to at least as long as you expect any single task will need to monopolise the CPU (for example, if you expect the app will do a long intensive calculation and should not yield to other tasks). It is also possible to change this timeout at runtime by calling `esp_task_wdt_init()`.

The following config options control TWDT configuration at startup. They are all enabled by default:

- *CONFIG_ESP_TASK_WDT* - the TWDT is initialized automatically during startup. If this option is disabled, it is still possible to initialize the Task WDT at runtime by calling `esp_task_wdt_init()`.
- *CONFIG_ESP_TASK_WDT_CHECK_IDLE_TASK_CPU0* - CPU0 Idle task is subscribed to the TWDT during startup. If this option is disabled, it is still possible to subscribe the idle task by calling `esp_task_wdt_add()` at any time.
- *CONFIG_ESP_TASK_WDT_CHECK_IDLE_TASK_CPU1* - CPU1 Idle task is subscribed to the TWDT during startup.

JTAG and watchdogs While debugging using OpenOCD, the CPUs will be halted every time a breakpoint is reached. However if the watchdog timers continue to run when a breakpoint is encountered, they will eventually trigger a reset making it very difficult to debug code. Therefore OpenOCD will disable the hardware timers of both

the interrupt and task watchdogs at every breakpoint. Moreover, OpenOCD will not reenable them upon leaving the breakpoint. This means that interrupt watchdog and task watchdog functionality will essentially be disabled. No warnings or panics from either watchdogs will be generated when the ESP32 is connected to OpenOCD via JTAG.

Interrupt Watchdog API Reference

Header File

- esp_system/include/esp_int_wdt.h

Functions

void **esp_int_wdt_init**(void)

Initialize the non-CPU-specific parts of interrupt watchdog. This is called in the init code if the interrupt watchdog is enabled in menuconfig.

Task Watchdog API Reference

A full example using the Task Watchdog is available in esp-idf: system/task_watchdog

Header File

- components/esp_system/include/esp_task_wdt.h

Functions

esp_err_t **esp_task_wdt_init**(uint32_t timeout, bool panic)

Initialize the Task Watchdog Timer (TWDT)

This function configures and initializes the TWDT. If the TWDT is already initialized when this function is called, this function will update the TWDT's timeout period and panic configurations instead. After initializing the TWDT, any task can elect to be watched by the TWDT by subscribing to it using esp_task_wdt_add().

Note: esp_task_wdt_init() must only be called after the scheduler started

---

Parameters

- **timeout** –**[in]** Timeout period of TWDT in seconds
- **panic** –**[in]** Flag that controls whether the panic handler will be executed when the TWDT times out

Returns

- ESP_OK: Initialization was successful
- ESP_ERR_NO_MEM: Initialization failed due to lack of memory

esp_err_t **esp_task_wdt_deinit**(void)

Deinitialize the Task Watchdog Timer (TWDT)

This function will deinitialize the TWDT. Calling this function whilst tasks are still subscribed to the TWDT, or when the TWDT is already deinitialized, will result in an error code being returned.

Returns

- ESP_OK: TWDT successfully deinitialized
- ESP_ERR_INVALID_STATE: Error, tasks are still subscribed to the TWDT
- ESP_ERR_NOT_FOUND: Error, TWDT has already been deinitialized

esp_err_t **esp_task_wdt_add**(*TaskHandle_t* handle)

Subscribe a task to the Task Watchdog Timer (TWDT)

This function subscribes a task to the TWDT. Each subscribed task must periodically call esp_task_wdt_reset() to prevent the TWDT from elapsing its timeout period. Failure to do so will result in a TWDT timeout. If the task being subscribed is one of the Idle Tasks, this function will automatically enable esp_task_wdt_reset() to called from the Idle Hook of the Idle Task. Calling this function whilst the TWDT is uninitialized or attempting to subscribe an already subscribed task will result in an error code being returned.

Parameters **handle** –**[in]** Handle of the task. Input NULL to subscribe the current running task to the TWDT

Returns

- ESP_OK: Successfully subscribed the task to the TWDT
- ESP_ERR_INVALID_ARG: Error, the task is already subscribed
- ESP_ERR_NO_MEM: Error, could not subscribe the task due to lack of memory
- ESP_ERR_INVALID_STATE: Error, the TWDT has not been initialized yet

esp_err_t **esp_task_wdt_reset**(void)

Reset the Task Watchdog Timer (TWDT) on behalf of the currently running task.

This function will reset the TWDT on behalf of the currently running task. Each subscribed task must periodically call this function to prevent the TWDT from timing out. If one or more subscribed tasks fail to reset the TWDT on their own behalf, a TWDT timeout will occur. If the IDLE tasks have been subscribed to the TWDT, they will automatically call this function from their idle hooks. Calling this function from a task that has not subscribed to the TWDT, or when the TWDT is uninitialized will result in an error code being returned.

Returns

- ESP_OK: Successfully reset the TWDT on behalf of the currently running task
- ESP_ERR_NOT_FOUND: Error, the current running task has not subscribed to the TWDT
- ESP_ERR_INVALID_STATE: Error, the TWDT has not been initialized yet

esp_err_t **esp_task_wdt_delete**(*TaskHandle_t* handle)

Unsubscribes a task from the Task Watchdog Timer (TWDT)

This function will unsubscribe a task from the TWDT. After being unsubscribed, the task should no longer call esp_task_wdt_reset(). If the task is an IDLE task, this function will automatically disable the calling of esp_task_wdt_reset() from the Idle Hook. Calling this function whilst the TWDT is uninitialized or attempting to unsubscribe an already unsubscribed task from the TWDT will result in an error code being returned.

Parameters **handle** –**[in]** Handle of the task. Input NULL to unsubscribe the current running task.

Returns

- ESP_OK: Successfully unsubscribed the task from the TWDT
- ESP_ERR_INVALID_ARG: Error, the task is already unsubscribed
- ESP_ERR_INVALID_STATE: Error, the TWDT has not been initialized yet

esp_err_t **esp_task_wdt_status**(*TaskHandle_t* handle)

Query whether a task is subscribed to the Task Watchdog Timer (TWDT)

This function will query whether a task is currently subscribed to the TWDT, or whether the TWDT is initialized.

Parameters **handle** –**[in]** Handle of the task. Input NULL to query the current running task.

Returns :

- ESP_OK: The task is currently subscribed to the TWDT
- ESP_ERR_NOT_FOUND: The task is currently not subscribed to the TWDT
- ESP_ERR_INVALID_STATE: The TWDT is not initialized, therefore no tasks can be subscribed

2.7.26 System Time

Overview

System time can be kept using either one time source or two time sources simultaneously. The choice depends on the application purpose and accuracy requirements for system time.

There are the following two time sources:

- **RTC timer**: Allows keeping the system time during any resets and sleep modes, only the power-up reset leads to resetting the RTC timer. The frequency deviation depends on an *RTC Clock Source* and affects accuracy only in sleep modes, in which case the time will be measured at 6.6667 us resolution.
- **High-resolution timer**: Not available during any reset and sleep modes. The reason for using this timer is to achieve greater accuracy. It uses the APB_CLK clock source (typically 80 MHz), which has a frequency deviation of less than ±10 ppm. Time will be measured at 1 us resolution.

The settings for the system time source are as follows:

- RTC and high-resolution timer (default)
- RTC
- High-resolution timer
- None

It is recommended to stick to the default setting which provides maximum accuracy. If you want to choose a different timer, configure *CONFIG_ESP32_TIME_SYSCALL* in project configuration.

RTC Clock Source

The RTC timer has the following clock sources:

- `Internal 150kHz RC oscillator` (default): Features lowest deep sleep current consumption and no dependence on any external components. However, as frequency stability is affected by temperature fluctuations, time may drift in both Deep and Light sleep modes.
- `External 32kHz crystal`: Requires a 32kHz crystal to be connected to the 32K_XP and 32K_XN pins. Provides better frequency stability at the expense of slightly higher (by 1 uA) Deep sleep current consumption.
- `External 32kHz oscillator at 32K_XN pin`: Allows using 32kHz clock generated by an external circuit. The external clock signal must be connected to the 32K_XN pin. The amplitude should be less than 1.2 V for sine wave signal and less than 1 V for square wave signal. Common mode voltage should be in the range of 0.1 < Vcm < 0.5xVamp, where Vamp is signal amplitude. Additionally, a 1 nF capacitor must be placed between the 32K_XP pin and ground. In this case, the 32K_XP pin cannot be used as a GPIO pin.
- `Internal 8.5MHz oscillator, divided by 256 (~33kHz)`: Provides better frequency stability than the `internal 150kHz RC oscillator` at the expense of higher (by 5 uA) deep sleep current consumption. It also does not require external components.

The choice depends on your requirements for system time accuracy and power consumption in sleep modes. To modify the RTC clock source, set *CONFIG_ESP32_RTC_CLK_SRC* in project configuration.

More details on wiring requirements for the `External 32kHz crystal` and `External 32kHz oscillator at 32K_XN pin` sources can be found in Section *Crystal Oscillator* of ESP32 Hardware Design Guidelines.

Get Current Time

To get the current time, use the POSIX function `gettimeofday()`. Additionally, you can use the following standard C library functions to obtain time and manipulate it:

```
gettimeofday
time
asctime
clock
```

(continues on next page)

(continued from previous page)

```
ctime
difftime
gmtime
localtime
mktime
strftime
adjtime*
```

* –To stop smooth time adjustment and update the current time immediately, use the POSIX function `settimeofday()`.

If you need to obtain time with one second resolution, use the following method:

```
time_t now;
char strftime_buf[64];
struct tm timeinfo;

time(&now);
// Set timezone to China Standard Time
setenv("TZ", "CST-8", 1);
tzset();

localtime_r(&now, &timeinfo);
strftime(strftime_buf, sizeof(strftime_buf), "%c", &timeinfo);
ESP_LOGI(TAG, "The current date/time in Shanghai is: %s", strftime_buf);
```

If you need to obtain time with one microsecond resolution, use the code snippet below:

```
struct timeval tv_now;
gettimeofday(&tv_now, NULL);
int64_t time_us = (int64_t)tv_now.tv_sec * 1000000L + (int64_t)tv_now.tv_usec;
```

SNTP Time Synchronization

To set the current time, you can use the POSIX functions `settimeofday()` and `adjtime()`. They are used internally in the lwIP SNTP library to set current time when a response from the NTP server is received. These functions can also be used separately from the lwIP SNTP library.

A function to use inside the lwIP SNTP library depends on a sync mode for system time. Use the function *`sntp_set_sync_mode()`* to set one of the following sync modes:

- `SNTP_SYNC_MODE_IMMED` (default) updates system time immediately upon receiving a response from the SNTP server after using `settimeofday()`.
- `SNTP_SYNC_MODE_SMOOTH` updates time smoothly by gradually reducing time error using the funcion `adjtime()`. If the difference between the SNTP response time and system time is more than 35 minutes, update system time immediately by using `settimeofday()`.

The lwIP SNTP library has API functions for setting a callback function for a certain event. You might need the following functions:

- `sntp_set_time_sync_notification_cb()` - use it for setting a callback function that will notify of the time synchronization process
- `sntp_get_sync_status()` and `sntp_set_sync_status()` - use it to get/set time synchronization status

To start synchronization via SNTP, just call the following three functions.

```
sntp_setoperatingmode(SNTP_OPMODE_POLL);
sntp_setservername(0, "pool.ntp.org");
sntp_init();
```

An application with this initialization code will periodically synchronize the time. The time synchronization period is determined by `CONFIG_LWIP_SNTP_UPDATE_DELAY` (default value is one hour). To modify the variable, set *CONFIG_LWIP_SNTP_UPDATE_DELAY* in project configuration.

A code example that demonstrates the implementation of time synchronization based on the lwIP SNTP library is provided in protocols/sntp directory.

Timezones

To set local timezone, use the following POSIX functions:

1. Call `setenv()` to set the `TZ` environment variable to the correct value depending on the device location. The format of the time string is the same as described in the GNU libc documentation (although the implementation is different).
2. Call `tzset()` to update C library runtime data for the new time zone.

Once these steps are completed, call the standard C library function `localtime()`, and it will return correct local time taking into account the time zone offset and daylight saving time.

API Reference

Header File

- components/lwip/include/apps/esp_sntp.h

Functions

void **sntp_sync_time**(struct timeval *tv)

This function updates the system time.

This is a weak-linked function. It is possible to replace all SNTP update functionality by placing a sntp_sync_time() function in the app firmware source. If the default implementation is used, calling sntp_set_sync_mode() allows the time synchronization mode to be changed to instant or smooth. If a callback function is registered via sntp_set_time_sync_notification_cb(), it will be called following time synchronization.

Parameters **tv** – Time received from SNTP server.

void **sntp_set_sync_mode**(*sntp_sync_mode_t* sync_mode)

Set the sync mode.

Allowable two mode: SNTP_SYNC_MODE_IMMED and SNTP_SYNC_MODE_SMOOTH.

Parameters **sync_mode** – Sync mode.

sntp_sync_mode_t **sntp_get_sync_mode**(void)

Get set sync mode.

Returns SNTP_SYNC_MODE_IMMED: Update time immediately. SNTP_SYNC_MODE_SMOOTH: Smooth time updating.

sntp_sync_status_t **sntp_get_sync_status**(void)

Get status of time sync.

After the update is completed, the status will be returned as SNTP_SYNC_STATUS_COMPLETED. After that, the status will be reset to SNTP_SYNC_STATUS_RESET. If the update operation is not completed yet, the status will be SNTP_SYNC_STATUS_RESET. If a smooth mode was chosen and the synchronization is still continuing (adjtime works), then it will be SNTP_SYNC_STATUS_IN_PROGRESS.

Returns SNTP_SYNC_STATUS_RESET: Reset status. SNTP_SYNC_STATUS_COMPLETED: Time is synchronized. SNTP_SYNC_STATUS_IN_PROGRESS: Smooth time sync in progress.

void **sntp_set_sync_status** (*sntp_sync_status_t* sync_status)

Set status of time sync.

Parameters **sync_status** –status of time sync (see sntp_sync_status_t)

void **sntp_set_time_sync_notification_cb** (*sntp_sync_time_cb_t* callback)

Set a callback function for time synchronization notification.

Parameters **callback** –a callback function

void **sntp_set_sync_interval** (uint32_t interval_ms)

Set the sync interval of SNTP operation.

Note: SNTPv4 RFC 4330 enforces a minimum sync interval of 15 seconds. This sync interval will be used in the next attempt update time throught SNTP. To apply the new sync interval call the sntp_restart() function, otherwise, it will be applied after the last interval expired.

Parameters **interval_ms** –The sync interval in ms. It cannot be lower than 15 seconds, otherwise 15 seconds will be set.

uint32_t **sntp_get_sync_interval** (void)

Get the sync interval of SNTP operation.

Returns the sync interval

bool **sntp_restart** (void)

Restart SNTP.

Returns True - Restart False - SNTP was not initialized yet

Type Definitions

typedef void (***sntp_sync_time_cb_t**)(struct timeval *tv)

SNTP callback function for notifying about time sync event.

Param tv Time received from SNTP server.

Enumerations

enum **sntp_sync_mode_t**

SNTP time update mode.

Values:

enumerator **SNTP_SYNC_MODE_IMMED**

Update system time immediately when receiving a response from the SNTP server.

enumerator **SNTP_SYNC_MODE_SMOOTH**

Smooth time updating. Time error is gradually reduced using adjtime function. If the difference between SNTP response time and system time is large (more than 35 minutes) then update immediately.

enum **sntp_sync_status_t**

SNTP sync status.

Values:

enumerator **SNTP_SYNC_STATUS_RESET**

enumerator **SNTP_SYNC_STATUS_COMPLETED**

enumerator **SNTP_SYNC_STATUS_IN_PROGRESS**

2.7.27 Internal and Unstable APIs

This section is listing some APIs that are internal or likely to be changed or removed in the next releases of ESP-IDF.

API Reference

Header File

- components/esp_rom/include/esp_rom_sys.h

Functions

int **esp_rom_printf**(const char *fmt, ...)

Print formated string to console device.

Note: float and long long data are not supported!

Parameters
- **fmt** –Format string
- **...** –Additional arguments, depending on the format string

Returns int: Total number of characters written on success; A negative number on failure.

void **esp_rom_delay_us**(uint32_t us)

Pauses execution for us microseconds.

Parameters **us** –Number of microseconds to pause

void **esp_rom_install_channel_putc**(int channel, void (*putc)(char c))

esp_rom_printf can print message to different channels simultaneously. This function can help install the low level putc function for esp_rom_printf.

Parameters
- **channel** –Channel number (startting from 1)
- **putc** –Function pointer to the putc implementation. Set NULL can disconnect esp_rom_printf with putc.

void **esp_rom_install_uart_printf**(void)

Install UART1 as the default console channel, equivalent to `esp_rom_install_channel_putc(1, esp_rom_uart_putc)`

soc_reset_reason_t **esp_rom_get_reset_reason**(int cpu_no)

Get reset reason of CPU.

Parameters **cpu_no** –CPU number
Returns Reset reason code (see in soc/reset_reasons.h)

Code examples for this API section are provided in the system directory of ESP-IDF examples.

2.8 API Conventions

This document describes conventions and assumptions common to ESP-IDF Application Programming Interfaces (APIs).

ESP-IDF provides several kinds of programming interfaces:

- C functions, structures, enums, type definitions and preprocessor macros declared in public header files of ESP-IDF components. Various pages in the API Reference section of the programming guide contain descriptions of these functions, structures and types.
- Build system functions, predefined variables and options. These are documented in the *build system guide*.
- *Kconfig* options can can be used in code and in the build system (CMakeLists.txt) files.
- *Host tools* and their command line parameters are also part of ESP-IDF interface.

ESP-IDF consists of components written specifically for ESP-IDF as well as third-party libraries. In some cases, an ESP-IDF-specific wrapper is added to the third-party library, providing an interface that is either simpler or better integrated with the rest of ESP-IDF facilities. In other cases, the original API of the third-party library is presented to the application developers.

Following sections explain some of the aspects of ESP-IDF APIs and their usage.

2.8.1 Error handling

Most ESP-IDF APIs return error codes defined with `esp_err_t` type. See *Error Handling* section for more information about error handling approaches. *Error Code Reference* contains the list of error codes returned by ESP-IDF components.

2.8.2 Configuration structures

Important: Correct initialization of configuration structures is an important part in making the application compatible with future versions of ESP-IDF.

Most initialization or configuration functions in ESP-IDF take as an argument a pointer to a configuration structure. For example:

```
const esp_timer_create_args_t my_timer_args = {
    .callback = &my_timer_callback,
    .arg = callback_arg,
    .name = "my_timer"
};
esp_timer_handle_t my_timer;
esp_err_t err = esp_timer_create(&my_timer_args, &my_timer);
```

Initialization functions never store the pointer to the configuration structure, so it is safe to allocate the structure on the stack.

The application must initialize all fields of the structure. The following is incorrect:

```
esp_timer_create_args_t my_timer_args;
my_timer_args.callback = &my_timer_callback;
/* Incorrect! Fields .arg and .name are not initialized */
esp_timer_create(&my_timer_args, &my_timer);
```

Most ESP-IDF examples use C99 designated initializers for structure initialization, since they provide a concise way of setting a subset of fields, and zero-initializing the remaining fields:

```
const esp_timer_create_args_t my_timer_args = {
    .callback = &my_timer_callback,
    /* Correct, fields .arg and .name are zero-initialized */
};
```

C++ language doesn't support the designated initializers syntax until C++20, however GCC compiler partially supports it as an extension. When using ESP-IDF APIs in C++ code, you may consider using the following pattern:

```
esp_timer_create_args_t my_timer_args = {};
/* All the fields are zero-initialized */
my_timer_args.callback = &my_timer_callback;
```

Default initializers

For some configuration structures, ESP-IDF provides macros for setting default values of fields:

```
httpd_config_t config = HTTPD_DEFAULT_CONFIG();
/* HTTPD_DEFAULT_CONFIG expands to a designated initializer.
   Now all fields are set to the default values.
   Any field can still be modified: */
config.server_port = 8081;
httpd_handle_t server;
esp_err_t err = httpd_start(&server, &config);
```

It is recommended to use default initializer macros whenever they are provided for a particular configuration structure.

2.8.3 Private APIs

Certain header files in ESP-IDF contain APIs intended to be used only in ESP-IDF source code, and not by the applications. Such header files often contain `private` or `esp_private` in their name or path. Certain components, such as *hal* only contain private APIs.

Private APIs may be removed or changed in an incompatible way between minor or patch releases.

2.8.4 Components in example projects

ESP-IDF examples contain a variety of projects demonstrating usage of ESP-IDF APIs. In order to reduce code duplication in the examples, a few common helpers are defined inside components that are used by multiple examples. This includes components located in common_components directory, as well as some of the components located in the examples themselves. These components are not considered to be part of the ESP-IDF API.

It is not recommended to reference these components directly in custom projects (via `EXTRA_COMPONENT_DIRS` build system variable), as they may change significantly between ESP-IDF versions. When starting a new project based on an ESP-IDF example, copy both the project and the common components it depends on out of ESP-IDF, and treat the common components as part of the project. Note that the common components are written with examples in mind, and might not include all the error handling required for production applications. Take time to read the code and understand if it applicable to your use case.

2.8.5 API Stability

ESP-IDF uses Semantic Versioning as explained in the *versions page*.

Minor and bugfix releases of ESP-IDF guarantee compatibility with previous releases. The sections below explain different aspects and limitations to compatibility.

Source level compatibility

ESP-IDF guarantees source level compatibility of C functions, structures, enums, type definitions and preprocessor macros declared in public header files of ESP-IDF components. Source level compatibility implies that the application can be recompiled with the newer version of ESP-IDF without changes.

The following changes are allowed between minor versions and do not break source level compatibility:

- Deprecating functions (using the `deprecated` attribute) and header files (using a preprocessor `#warning`). Deprecations are listed in ESP-IDF relese notes. It is recommended to update the source code to use the newer functions or files that replace the deprecated ones, however this is not mandatory. Deprecated functions and files can be removed in major versions of ESP-IDF.
- Renaming components, moving source and header files between components —provided that the build system ensures that correct files are still found.
- Renaming Kconfig options. Kconfig system *renaming mechanism* ensures that the original Kconfig option names can still be used by the application in `sdkconfig` file, CMake files and source code.

Lack of binary compatibility

ESP-IDF does not guarantee binary compatibility between releases. This means that if a precompiled library is built with one ESP-IDF version, it is not guaranteed to work the same way with the next minor or bugfix release. The following are the possible changes that keep source level compatibility but not binary compatibility:

- Changing numerical values for C enum members.
- Adding new structure members or changing the order of members. See *Configuration structures* for tips that help ensure compatibility.
- Replacing an `extern` function with a `static inline` one with the same signature, or vice versa.
- Replacing a function-like macro with a compatible C function.

Other exceptions from compatibility

While we try to make upgrading to a new ESP-IDF version easy, there are parts of ESP-IDF that may change between minor versions in an incompatible way. We appreciate issue reports about any unintended breaking changes that don't fall into the categories below.

- *Private APIs*.
- *Components in example projects*.
- Features clearly marked as "beta", "preview", or "experimental".
- Changes made to mitigate security issues or to replace insecure default behaviors with a secure ones.
- Features which were never functional. For example, if it was never possible to use a certain function or an enumeration value, it may get renamed (as part of fixing it) or removed. This includes software features which depend on non-functional chip hardware features.
- Unexpected or undefined behavior (for example, due to missing validation of argument ranges) that is not documented explicitly may be fixed/changed.
- Location of *Kconfig* options in menuconfig.
- Location and names of example projects.

2.9 Project Configuration

2.9.1 Introduction

ESP-IDF uses kconfiglib which is a Python-based extension to the Kconfig system which provides a compile-time project configuration mechanism. Kconfig is based around options of several types: integer, string, boolean. Kconfig files specify dependencies between options, default values of the options, the way the options are grouped together, etc.

For the complete list of available features please see Kconfig and kconfiglib extentions.

2.9.2 Project Configuration Menu

Application developers can open a terminal-based project configuration menu with the `idf.py menuconfig` build target.

After being updated, this configuration is saved inside `sdkconfig` file in the project root directory. Based on `sdkconfig`, application build targets will generate `sdkconfig.h` file in the build directory, and will make sdkconfig options available to the project build system and source files.

(For the legacy GNU Make build system, the project configuration menu is opened with `make menuconfig`.)

2.9.3 Using sdkconfig.defaults

In some cases, such as when `sdkconfig` file is under revision control, the fact that `sdkconfig` file gets changed by the build system may be inconvenient. The build system offers a way to avoid this, in the form of `sdkconfig.defaults` file. This file is never touched by the build system, and must be created manually. It can contain all the options which matter for the given application. The format is the same as that of the `sdkconfig` file. Once `sdkconfig.defaults` is created, `sdkconfig` can be deleted and added to the ignore list of the revision control system (e.g. `.gitignore` file for git). Project build targets will automatically create `sdkconfig` file, populated with the settings from `sdkconfig.defaults` file, and the rest of the settings will be set to their default values. Note that the build process will not override settings that are already in `sdkconfig` by ones from `sdkconfig.defaults`. For more information, see *Custom sdkconfig defaults*.

2.9.4 Kconfig Formatting Rules

The following attributes of `Kconfig` files are standardized:

- Within any menu, option names should have a consistent prefix. The prefix length is currently set to at least 3 characters.
- The indentation style is 4 characters created by spaces. All sub-items belonging to a parent item are indented by one level deeper. For example, `menu` is indented by 0 characters, the `config` inside of the menu by 4 characters, the help of the `config` by 8 characters and the text of the `help` by 12 characters.
- No trailing spaces are allowed at the end of the lines.
- The maximum length of options is set to 40 characters.
- The maximum length of lines is set to 120 characters.
- Lines cannot be wrapped by backslash (because there is a bug in earlier versions of `conf-idf` which causes that Windows line endings are not recognized after a backslash).

Format checker

`tools/check_kconfigs.py` is provided for checking the `Kconfig` formatting rules. The checker checks all `Kconfig` and `Kconfig.projbuild` files in the ESP-IDF directory and generates a new file with suffix `.new` with some recommendations how to fix issues (if there are any). Please note that the checker cannot correct all rules and the responsibility of the developer is to check and make final corrections in order to pass the tests. For example, indentations will be corrected if there isn't some misleading previous formatting but it cannot come up with a common prefix for options inside a menu.

2.9.5 Backward Compatibility of Kconfig Options

The standard Kconfig tools ignore unknown options in `sdkconfig`. So if a developer has custom settings for options which are renamed in newer ESP-IDF releases then the given setting for the option would be silently ignored. Therefore, several features have been adopted to avoid this:

1. `confgen.py` is used by the tool chain to pre-process `sdkconfig` files before anything else, for example `menuconfig`, would read them. As the consequence, the settings for old options will be kept and not ignored.
2. `confgen.py` recursively finds all `sdkconfig.rename` files in ESP-IDF directory which contain old and new `Kconfig` option names. Old options are replaced by new ones in the `sdkconfig` file.
3. `confgen.py` post-processes `sdkconfig` files and generates all build outputs (`sdkconfig.h`, `sdkconfig.cmake`, `auto.conf`) by adding a list of compatibility statements, i.e. value of the old option is set the value of the new option (after modification). This is done in order to not break customer codes where old option might still be used.

4. *Deprecated options and their replacements* are automatically generated by `confgen.py`.

2.9.6 Configuration Options Reference

Subsequent sections contain the list of available ESP-IDF options, automatically generated from Kconfig files. Note that depending on the options selected, some options listed here may not be visible by default in the interface of menuconfig.

By convention, all option names are upper case with underscores. When Kconfig generates sdkconfig and sdkconfig.h files, option names are prefixed with `CONFIG_`. So if an option `ENABLE_FOO` is defined in a Kconfig file and selected in menuconfig, then sdkconfig and sdkconfig.h files will have `CONFIG_ENABLE_FOO` defined. In this reference, option names are also prefixed with `CONFIG_`, same as in the source code.

SDK tool configuration

Contains:

- *CONFIG_SDK_MAKE_WARN_UNDEFINED_VARIABLES*
- *CONFIG_SDK_TOOLPREFIX*
- *CONFIG_SDK_PYTHON*
- *CONFIG_SDK_TOOLCHAIN_SUPPORTS_TIME_WIDE_64_BITS*

CONFIG_SDK_TOOLPREFIX

Compiler toolchain path/prefix

Found in: SDK tool configuration

The prefix/path that is used to call the toolchain. The default setting assumes a crosstool-ng gcc setup that is in your PATH.

Default value:

- “xtensa-esp32-elf- “

CONFIG_SDK_PYTHON

Python interpreter

Found in: SDK tool configuration

The executable name/path that is used to run python.

(Note: This option is used with the legacy GNU Make build system only.)

Default value:

- “python”

CONFIG_SDK_MAKE_WARN_UNDEFINED_VARIABLES

‘make’ warns on undefined variables

Found in: SDK tool configuration

Adds –warn-undefined-variables to MAKEFLAGS. This causes make to print a warning any time an undefined variable is referenced.

This option helps find places where a variable reference is misspelled or otherwise missing, but it can be unwanted if you have Makefiles which depend on undefined variables expanding to an empty string.

(Note: this option is used with the legacy GNU Make build system only.)

Default value:

- Yes (enabled)

CONFIG_SDK_TOOLCHAIN_SUPPORTS_TIME_WIDE_64_BITS

Toolchain supports time_t wide 64-bits

Found in: SDK tool configuration

Enable this option in case you have a custom toolchain which supports time_t wide 64-bits. This option checks time_t is 64-bits and disables ROM time functions to use the time functions from the toolchain instead. This option allows resolving the Y2K38 problem. See "Setup Linux Toolchain from Scratch" to build a custom toolchain which supports 64-bits time_t.

Note: ESP-IDF does not currently come with any pre-compiled toolchain that supports 64-bit wide time_t. This will change in a future major release, but currently 64-bit time_t requires a custom built toolchain.

Default value:

- No (disabled)

Build type

Contains:

- *CONFIG_APP_BUILD_TYPE*

CONFIG_APP_BUILD_TYPE

Application build type

Found in: Build type

Select the way the application is built.

By default, the application is built as a binary file in a format compatible with the ESP-IDF bootloader. In addition to this application, 2nd stage bootloader is also built. Application and bootloader binaries can be written into flash and loaded/executed from there.

Another option, useful for only very small and limited applications, is to only link the .elf file of the application, such that it can be loaded directly into RAM over JTAG. Note that since IRAM and DRAM sizes are very limited, it is not possible to build any complex application this way. However for kinds of testing and debugging, this option may provide faster iterations, since the application does not need to be written into flash. Note that at the moment, ESP-IDF does not contain all the startup code required to initialize the CPUs and ROM memory (data/bss). Therefore it is necessary to execute a bit of ROM code prior to executing the application. A gdbinit file may look as follows (for ESP32):

> # Connect to a running instance of OpenOCD target remote :3333 # Reset and halt the target mon reset halt # Run to a specific point in ROM code, # where most of initialization is complete. thb *0x40007d54 c # Load the application into RAM load # Run till app_main tb app_main c

Execute this gdbinit file as follows:

> xtensa-esp32-elf-gdb build/app-name.elf -x gdbinit

Example gdbinit files for other targets can be found in tools/test_apps/system/gdb_loadable_elf/

Recommended sdkconfig.defaults for building loadable ELF files is as follows. CONFIG_APP_BUILD_TYPE_ELF_RAM is required, other options help reduce application memory footprint.

> CONFIG_APP_BUILD_TYPE_ELF_RAM=y CONFIG_VFS_SUPPORT_TERMIOS= CONFIG_NEWLIB_NANO_FORMAT=y CONFIG_ESP_SYSTEM_PANIC_PRINT_HALT=y CONFIG_ESP_DEBUG_STUBS_ENABLE= CONFIG_ESP_ERR_TO_NAME_LOOKUP=

Available options:

- Default (binary application + 2nd stage bootloader) (APP_BUILD_TYPE_APP_2NDBOOT)

- ELF file, loadable into RAM (EXPERIMENTAL)) (APP_BUILD_TYPE_ELF_RAM)

Application manager

Contains:

- *CONFIG_APP_EXCLUDE_PROJECT_NAME_VAR*
- *CONFIG_APP_EXCLUDE_PROJECT_VER_VAR*
- *CONFIG_APP_PROJECT_VER_FROM_CONFIG*
- *CONFIG_APP_RETRIEVE_LEN_ELF_SHA*
- *CONFIG_APP_COMPILE_TIME_DATE*

CONFIG_APP_COMPILE_TIME_DATE

Use time/date stamp for app

Found in: Application manager

If set, then the app will be built with the current time/date stamp. It is stored in the app description structure. If not set, time/date stamp will be excluded from app image. This can be useful for getting the same binary image files made from the same source, but at different times.

Default value:

- Yes (enabled)

CONFIG_APP_EXCLUDE_PROJECT_VER_VAR

Exclude PROJECT_VER from firmware image

Found in: Application manager

The PROJECT_VER variable from the build system will not affect the firmware image. This value will not be contained in the esp_app_desc structure.

Default value:

- No (disabled)

CONFIG_APP_EXCLUDE_PROJECT_NAME_VAR

Exclude PROJECT_NAME from firmware image

Found in: Application manager

The PROJECT_NAME variable from the build system will not affect the firmware image. This value will not be contained in the esp_app_desc structure.

Default value:

- No (disabled)

CONFIG_APP_PROJECT_VER_FROM_CONFIG

Get the project version from Kconfig

Found in: Application manager

If this is enabled, then config item APP_PROJECT_VER will be used for the variable PROJECT_VER. Other ways to set PROJECT_VER will be ignored.

Default value:

- No (disabled)

CONFIG_APP_PROJECT_VER

Project version

Found in: Application manager > CONFIG_APP_PROJECT_VER_FROM_CONFIG

Project version

Default value:

- 1 if *CONFIG_APP_PROJECT_VER_FROM_CONFIG*

CONFIG_APP_RETRIEVE_LEN_ELF_SHA

The length of APP ELF SHA is stored in RAM(chars)

Found in: Application manager

At startup, the app will read this many hex characters from the embedded APP ELF SHA-256 hash value and store it in static RAM. This ensures the app ELF SHA-256 value is always available if it needs to be printed by the panic handler code. Changing this value will change the size of a static buffer, in bytes.

Range:

- from 8 to 64

Default value:

- 16

Bootloader config

Contains:

- *CONFIG_BOOTLOADER_LOG_LEVEL*
- *CONFIG_BOOTLOADER_COMPILER_OPTIMIZATION*
- *CONFIG_BOOTLOADER_SPI_WP_PIN*
- *CONFIG_BOOTLOADER_APP_ROLLBACK_ENABLE*
- *CONFIG_BOOTLOADER_REGION_PROTECTION_ENABLE*
- *CONFIG_BOOTLOADER_FLASH_XMC_SUPPORT*
- *CONFIG_BOOTLOADER_APP_TEST*
- *CONFIG_BOOTLOADER_FACTORY_RESET*
- *CONFIG_BOOTLOADER_HOLD_TIME_GPIO*
- *CONFIG_BOOTLOADER_CUSTOM_RESERVE_RTC*
- *CONFIG_BOOTLOADER_SKIP_VALIDATE_ALWAYS*
- *CONFIG_BOOTLOADER_SKIP_VALIDATE_ON_POWER_ON*
- *CONFIG_BOOTLOADER_SKIP_VALIDATE_IN_DEEP_SLEEP*
- *CONFIG_BOOTLOADER_SPI_CUSTOM_WP_PIN*
- *CONFIG_BOOTLOADER_WDT_ENABLE*
- *CONFIG_BOOTLOADER_VDDSDIO_BOOST*

CONFIG_BOOTLOADER_COMPILER_OPTIMIZATION

Bootloader optimization Level

Found in: Bootloader config

This option sets compiler optimization level (gcc -O argument) for the bootloader.

- The default "Size" setting will add the -0s flag to CFLAGS.
- The "Debug" setting will add the -Og flag to CFLAGS.
- The "Performance" setting will add the -O2 flag to CFLAGS.
- The "None" setting will add the -O0 flag to CFLAGS.

Note that custom optimization levels may be unsupported.

Available options:

- Size (-Os) (BOOTLOADER_COMPILER_OPTIMIZATION_SIZE)
- Debug (-Og) (BOOTLOADER_COMPILER_OPTIMIZATION_DEBUG)
- Optimize for performance (-O2) (BOOTLOADER_COMPILER_OPTIMIZATION_PERF)
- Debug without optimization (-O0) (BOOTLOADER_COMPILER_OPTIMIZATION_NONE)

CONFIG_BOOTLOADER_LOG_LEVEL

Bootloader log verbosity

Found in: Bootloader config

Specify how much output to see in bootloader logs.

Available options:

- No output (BOOTLOADER_LOG_LEVEL_NONE)
- Error (BOOTLOADER_LOG_LEVEL_ERROR)
- Warning (BOOTLOADER_LOG_LEVEL_WARN)
- Info (BOOTLOADER_LOG_LEVEL_INFO)
- Debug (BOOTLOADER_LOG_LEVEL_DEBUG)
- Verbose (BOOTLOADER_LOG_LEVEL_VERBOSE)

CONFIG_BOOTLOADER_SPI_CUSTOM_WP_PIN

Use custom SPI Flash WP Pin when flash pins set in eFuse (read help)

Found in: Bootloader config

This setting is only used if the SPI flash pins have been overridden by setting the eFuses SPI_PAD_CONFIG_xxx, and the SPI flash mode is QIO or QOUT.

When this is the case, the eFuse config only defines 3 of the 4 Quad I/O data pins. The WP pin (aka ESP32 pin "SD_DATA_3" or SPI flash pin "IO2") is not specified in eFuse. The same pin is also used for external SPIRAM if it is enabled.

If this config item is set to N (default), the correct WP pin will be automatically used for any Espressif chip or module with integrated flash. If a custom setting is needed, set this config item to Y and specify the GPIO number connected to the WP.

Default value:

- No (disabled) if ESPTOOLPY_FLASHMODE_QIO || ESPTOOLPY_FLASHMODE_QOUT

CONFIG_BOOTLOADER_SPI_WP_PIN

Custom SPI Flash WP Pin

Found in: Bootloader config

The option "Use custom SPI Flash WP Pin" must be set or this value is ignored

If burning a customized set of SPI flash pins in eFuse and using QIO or QOUT mode for flash, set this value to the GPIO number of the SPI flash WP pin.

Range:

- from 0 to 33 if ESPTOOLPY_FLASHMODE_QIO || ESPTOOLPY_FLASHMODE_QOUT

Default value:

- 7 if ESPTOOLPY_FLASHMODE_QIO || ESPTOOLPY_FLASHMODE_QOUT

CONFIG_BOOTLOADER_VDDSDIO_BOOST

VDDSDIO LDO voltage

Found in: Bootloader config

If this option is enabled, and VDDSDIO LDO is set to 1.8V (using eFuse or MTDI bootstrapping pin), bootloader will change LDO settings to output 1.9V instead. This helps prevent flash chip from browning out during flash programming operations.

This option has no effect if VDDSDIO is set to 3.3V, or if the internal VDDSDIO regulator is disabled via eFuse.

Available options:

- 1.8V (BOOTLOADER_VDDSDIO_BOOST_1_8V)
- 1.9V (BOOTLOADER_VDDSDIO_BOOST_1_9V)

CONFIG_BOOTLOADER_FACTORY_RESET

GPIO triggers factory reset

Found in: Bootloader config

Allows to reset the device to factory settings: - clear one or more data partitions; - boot from "factory" partition. The factory reset will occur if there is a GPIO input held at the configured level while device starts up. See settings below.

Default value:

- No (disabled)

CONFIG_BOOTLOADER_NUM_PIN_FACTORY_RESET

Number of the GPIO input for factory reset

Found in: Bootloader config > CONFIG_BOOTLOADER_FACTORY_RESET

The selected GPIO will be configured as an input with internal pull-up enabled (note that on some SoCs. not all pins have an internal pull-up, consult the hardware datasheet for details.) To trigger a factory reset, this GPIO must be held high or low (as configured) on startup.

Range:

- from 0 to 39 if *CONFIG_BOOTLOADER_FACTORY_RESET*

Default value:

- 4 if *CONFIG_BOOTLOADER_FACTORY_RESET*

CONFIG_BOOTLOADER_FACTORY_RESET_PIN_LEVEL

Factory reset GPIO level

Found in: Bootloader config > CONFIG_BOOTLOADER_FACTORY_RESET

Pin level for factory reset, can be triggered on low or high.

Available options:

- Reset on GPIO low (BOOTLOADER_FACTORY_RESET_PIN_LOW)
- Reset on GPIO high (BOOTLOADER_FACTORY_RESET_PIN_HIGH)

CONFIG_BOOTLOADER_OTA_DATA_ERASE

Clear OTA data on factory reset (select factory partition)

Found in: Bootloader config > CONFIG_BOOTLOADER_FACTORY_RESET

The device will boot from "factory" partition (or OTA slot 0 if no factory partition is present) after a factory reset.

CONFIG_BOOTLOADER_DATA_FACTORY_RESET

Comma-separated names of partitions to clear on factory reset

Found in: Bootloader config > CONFIG_BOOTLOADER_FACTORY_RESET

Allows customers to select which data partitions will be erased while factory reset.

Specify the names of partitions as a comma-delimited with optional spaces for readability. (Like this: "nvs, phy_init, ···") Make sure that the name specified in the partition table and here are the same. Partitions of type "app" cannot be specified here.

Default value:

- "nvs" if *CONFIG_BOOTLOADER_FACTORY_RESET*

CONFIG_BOOTLOADER_APP_TEST

GPIO triggers boot from test app partition

Found in: Bootloader config

Allows to run the test app from "TEST" partition. A boot from "test" partition will occur if there is a GPIO input pulled low while device starts up. See settings below.

Default value:

- No (disabled) if *CONFIG_BOOTLOADER_APP_ANTI_ROLLBACK*

CONFIG_BOOTLOADER_NUM_PIN_APP_TEST

Number of the GPIO input to boot TEST partition

Found in: Bootloader config > CONFIG_BOOTLOADER_APP_TEST

The selected GPIO will be configured as an input with internal pull-up enabled. To trigger a test app, this GPIO must be pulled low on reset. After the GPIO input is deactivated and the device reboots, the old application will boot. (factory or OTA[x]). Note that GPIO34-39 do not have an internal pullup and an external one must be provided.

Range:

- from 0 to 39 if *CONFIG_BOOTLOADER_APP_TEST*

Default value:

- 18 if *CONFIG_BOOTLOADER_APP_TEST*

CONFIG_BOOTLOADER_HOLD_TIME_GPIO

Hold time of GPIO for reset/test mode (seconds)

Found in: Bootloader config

The GPIO must be held low continuously for this period of time after reset before a factory reset or test partition boot (as applicable) is performed.

Default value:

- 5 if *CONFIG_BOOTLOADER_FACTORY_RESET* || *CONFIG_BOOTLOADER_APP_TEST*

CONFIG_BOOTLOADER_REGION_PROTECTION_ENABLE

Enable protection for unmapped memory regions

Found in: Bootloader config

Protects the unmapped memory regions of the entire address space from unintended accesses. This will ensure that an exception will be triggered whenever the CPU performs a memory operation on unmapped regions of the address space.

Default value:

- Yes (enabled)

CONFIG_BOOTLOADER_WDT_ENABLE

Use RTC watchdog in start code

Found in: Bootloader config

Tracks the execution time of startup code. If the execution time is exceeded, the RTC_WDT will restart system. It is also useful to prevent a lock up in start code caused by an unstable power source. NOTE: Tracks the execution time starts from the bootloader code - re-set timeout, while selecting the source for slow_clk - and ends calling app_main. Re-set timeout is needed due to WDT uses a SLOW_CLK clock source. After changing a frequency slow_clk a time of WDT needs to re-set for new frequency. slow_clk depends on ESP32_RTC_CLK_SRC (INTERNAL_RC or EXTERNAL_CRYSTAL).

Default value:

- Yes (enabled)

CONFIG_BOOTLOADER_WDT_DISABLE_IN_USER_CODE

Allows RTC watchdog disable in user code

Found in: Bootloader config > CONFIG_BOOTLOADER_WDT_ENABLE

If this option is set, the ESP-IDF app must explicitly reset, feed, or disable the rtc_wdt in the app's own code. If this option is not set (default), then rtc_wdt will be disabled by ESP-IDF before calling the app_main() function.

Use function rtc_wdt_feed() for resetting counter of rtc_wdt. Use function rtc_wdt_disable() for disabling rtc_wdt.

Default value:

- No (disabled)

CONFIG_BOOTLOADER_WDT_TIME_MS

Timeout for RTC watchdog (ms)

Found in: Bootloader config > CONFIG_BOOTLOADER_WDT_ENABLE

Verify that this parameter is correct and more then the execution time. Pay attention to options such as reset to factory, trigger test partition and encryption on boot - these options can increase the execution time. Note: RTC_WDT will reset while encryption operations will be performed.

Range:

- from 0 to 120000

Default value:

- 9000

CONFIG_BOOTLOADER_APP_ROLLBACK_ENABLE

Enable app rollback support

Found in: Bootloader config

After updating the app, the bootloader runs a new app with the "ESP_OTA_IMG_PENDING_VERIFY" state set. This state prevents the re-run of this app. After the first boot of the new app in the user code, the function should be called to confirm the operability of the app or vice versa about its non-operability. If the app is working, then it is marked as valid. Otherwise, it is marked as not valid and rolls back to the previous working app. A reboot is performed, and the app is booted before the software update. Note: If during the first boot a new app the power goes out or the WDT works, then roll back will happen. Rollback is possible only between the apps with the same security versions.

Default value:

- No (disabled)

CONFIG_BOOTLOADER_APP_ANTI_ROLLBACK

Enable app anti-rollback support

Found in: Bootloader config > CONFIG_BOOTLOADER_APP_ROLLBACK_ENABLE

This option prevents rollback to previous firmware/application image with lower security version.

Default value:

- No (disabled) if *CONFIG_BOOTLOADER_APP_ROLLBACK_ENABLE*

CONFIG_BOOTLOADER_APP_SECURE_VERSION

eFuse secure version of app

Found in: Bootloader config > CONFIG_BOOTLOADER_APP_ROLLBACK_ENABLE > CONFIG_BOOTLOADER_APP_ANTI_ROLLBACK

The secure version is the sequence number stored in the header of each firmware. The security version is set in the bootloader, version is recorded in the eFuse field as the number of set ones. The allocated number of bits in the efuse field for storing the security version is limited (see BOOTLOADER_APP_SEC_VER_SIZE_EFUSE_FIELD option).

Bootloader: When bootloader selects an app to boot, an app is selected that has a security version greater or equal that recorded in eFuse field. The app is booted with a higher (or equal) secure version.

The security version is worth increasing if in previous versions there is a significant vulnerability and their use is not acceptable.

Your partition table should has a scheme with ota_0 + ota_1 (without factory).

Default value:

- 0 if *CONFIG_BOOTLOADER_APP_ANTI_ROLLBACK*

CONFIG_BOOTLOADER_APP_SEC_VER_SIZE_EFUSE_FIELD

Size of the efuse secure version field

Found in: Bootloader config > CONFIG_BOOTLOADER_APP_ROLLBACK_ENABLE > CONFIG_BOOTLOADER_APP_ANTI_ROLLBACK

The size of the efuse secure version field. Its length is limited to 32 bits for ESP32 and 16 bits for ESP32-S2. This determines how many times the security version can be increased.

Range:

- from 1 to 32 if *CONFIG_BOOTLOADER_APP_ANTI_ROLLBACK*
- from 1 to 16 if *CONFIG_BOOTLOADER_APP_ANTI_ROLLBACK*

Default value:

- 32 if *CONFIG_BOOTLOADER_APP_ANTI_ROLLBACK*
- 16 if *CONFIG_BOOTLOADER_APP_ANTI_ROLLBACK*

CONFIG_BOOTLOADER_EFUSE_SECURE_VERSION_EMULATE

Emulate operations with efuse secure version(only test)

Found in: Bootloader config > CONFIG_BOOTLOADER_APP_ROLLBACK_ENABLE > CONFIG_BOOTLOADER_APP_ANTI_ROLLBACK

This option allows to emulate read/write operations with all eFuses and efuse secure version. It allows to test anti-rollback implemention without permanent write eFuse bits. There should be an entry in partition table with following details: *emul_efuse, data, efuse, , 0x2000*.

This option enables: EFUSE_VIRTUAL and EFUSE_VIRTUAL_KEEP_IN_FLASH.

Default value:

- No (disabled) if *CONFIG_BOOTLOADER_APP_ANTI_ROLLBACK*

CONFIG_BOOTLOADER_SKIP_VALIDATE_IN_DEEP_SLEEP

Skip image validation when exiting deep sleep

Found in: Bootloader config

This option disables the normal validation of an image coming out of deep sleep (checksums, SHA256, and signature). This is a trade-off between wakeup performance from deep sleep, and image integrity checks.

Only enable this if you know what you are doing. It should not be used in conjunction with using deep_sleep() entry and changing the active OTA partition as this would skip the validation upon first load of the new OTA partition.

It is possible to enable this option with Secure Boot if "allow insecure options" is enabled, however it's strongly recommended to NOT enable it as it may allow a Secure Boot bypass.

Default value:

- No (disabled) if (*CONFIG_SECURE_BOOT* && *CONFIG_SECURE_BOOT_INSECURE*) || *CONFIG_SECURE_BOOT*

CONFIG_BOOTLOADER_SKIP_VALIDATE_ON_POWER_ON

Skip image validation from power on reset (READ HELP FIRST)

Found in: Bootloader config

Some applications need to boot very quickly from power on. By default, the entire app binary is read from flash and verified which takes up a significant portion of the boot time.

Enabling this option will skip validation of the app when the SoC boots from power on. Note that in this case it's not possible for the bootloader to detect if an app image is corrupted in the flash, therefore it's not possible to safely fall back to a different app partition. Flash corruption of this kind is unlikely but can happen if there is a serious firmware bug or physical damage.

Following other reset types, the bootloader will still validate the app image. This increases the chances that flash corruption resulting in a crash can be detected following soft reset, and the bootloader will fall back to a valid app image. To increase the chances of successfully recovering from a flash corruption event, keep the option BOOTLOADER_WDT_ENABLE enabled and consider also enabling BOOTLOADER_WDT_DISABLE_IN_USER_CODE - then manually disable the RTC Watchdog once the app is running. In addition, enable both the Task and Interrupt watchdog timers with reset options set.

Default value:

- No (disabled)

CONFIG_BOOTLOADER_SKIP_VALIDATE_ALWAYS

Skip image validation always (READ HELP FIRST)

Found in: Bootloader config

Selecting this option prevents the bootloader from ever validating the app image before booting it. Any flash corruption of the selected app partition will make the entire SoC unbootable.

Although flash corruption is a very rare case, it is not recommended to select this option. Consider selecting "Skip image validation from power on reset" instead. However, if boot time is the only important factor then it can be enabled.

Default value:

- No (disabled)

CONFIG_BOOTLOADER_CUSTOM_RESERVE_RTC

Reserve RTC FAST memory for custom purposes

Found in: Bootloader config

This option allows the customer to place data in the RTC FAST memory, this area remains valid when rebooted, except for power loss. This memory is located at a fixed address and is available for both the bootloader and the application. (The application and bootoloader must be compiled with the same option). The RTC FAST memory has access only through PRO_CPU.

Default value:

- No (disabled)

CONFIG_BOOTLOADER_CUSTOM_RESERVE_RTC_SIZE

Size in bytes for custom purposes

Found in: Bootloader config > CONFIG_BOOTLOADER_CUSTOM_RESERVE_RTC

This option reserves in RTC FAST memory the area for custom purposes. If you want to create your own bootloader and save more information in this area of memory, you can increase it. It must be a multiple of 4 bytes. This area (rtc_retain_mem_t) is reserved and has access from the bootloader and an application.

Range:

- from 0 to 0x10 if *CONFIG_BOOTLOADER_CUSTOM_RESERVE_RTC*

Default value:

- 0 if *CONFIG_BOOTLOADER_CUSTOM_RESERVE_RTC*

CONFIG_BOOTLOADER_FLASH_XMC_SUPPORT

Enable the support for flash chips of XMC (READ HELP FIRST)

Found in: Bootloader config

Perform the startup flow recommended by XMC. Please consult XMC for the details of this flow. XMC chips will be forbidden to be used, when this option is disabled.

DON’T DISABLE THIS UNLESS YOU KNOW WHAT YOU ARE DOING.

Default value:

- Yes (enabled)

Security features

Contains:

- *CONFIG_SECURE_BOOT_INSECURE*
- *CONFIG_SECURE_SIGNED_APPS_SCHEME*
- *CONFIG_SECURE_SIGNED_ON_BOOT_NO_SECURE_BOOT*
- *CONFIG_SECURE_FLASH_CHECK_ENC_EN_IN_APP*
- *CONFIG_SECURE_FLASH_ENC_ENABLED*
- *CONFIG_SECURE_BOOT*
- *CONFIG_SECURE_BOOTLOADER_KEY_ENCODING*
- *Potentially insecure options*
- *CONFIG_SECURE_SIGNED_APPS_NO_SECURE_BOOT*
- *CONFIG_SECURE_BOOT_VERIFICATION_KEY*
- *CONFIG_SECURE_BOOTLOADER_MODE*
- *CONFIG_SECURE_BOOT_BUILD_SIGNED_BINARIES*
- *CONFIG_SECURE_UART_ROM_DL_MODE*
- *CONFIG_SECURE_SIGNED_ON_UPDATE_NO_SECURE_BOOT*

CONFIG_SECURE_SIGNED_APPS_NO_SECURE_BOOT

Require signed app images

Found in: Security features

Require apps to be signed to verify their integrity.

This option uses the same app signature scheme as hardware secure boot, but unlike hardware secure boot it does not prevent the bootloader from being physically updated. This means that the device can be secured against remote network access, but not physical access. Compared to using hardware Secure Boot this option is much simpler to implement.

CONFIG_SECURE_SIGNED_APPS_SCHEME

App Signing Scheme

Found in: Security features

Select the Secure App signing scheme. Depends on the Chip Revision. There are two options: 1. ECDSA based secure boot scheme. (Only choice for Secure Boot V1) Supported in ESP32 and ESP32-ECO3. 2. The RSA based secure boot scheme. (Only choice for Secure Boot V2) Supported in ESP32-ECO3 (ESP32 Chip Revision 3 onwards), ESP32-S2, ESP32-C3, ESP32-S3.

Available options:

- ECDSA (SECURE_SIGNED_APPS_ECDSA_SCHEME)
  Embeds the ECDSA public key in the bootloader and signs the application with an ECDSA key.
  Refer to the documentation before enabling.
- RSA (SECURE_SIGNED_APPS_RSA_SCHEME)
  Appends the RSA-3072 based Signature block to the application. Refer to <Secure Boot Version 2 documentation link> before enabling.

CONFIG_SECURE_SIGNED_ON_BOOT_NO_SECURE_BOOT

Bootloader verifies app signatures

Found in: Security features

If this option is set, the bootloader will be compiled with code to verify that an app is signed before booting it.

If hardware secure boot is enabled, this option is always enabled and cannot be disabled. If hardware secure boot is not enabled, this option doesn't add significant security by itself so most users will want to leave it disabled.

Default value:

- No (disabled) if *CONFIG_SECURE_SIGNED_APPS_NO_SECURE_BOOT* && SECURE_SIGNED_APPS_ECDSA_SCHEME

CONFIG_SECURE_SIGNED_ON_UPDATE_NO_SECURE_BOOT

Verify app signature on update

Found in: Security features

If this option is set, any OTA updated apps will have the signature verified before being considered valid.

When enabled, the signature is automatically checked whenever the esp_ota_ops.h APIs are used for OTA updates, or esp_image_format.h APIs are used to verify apps.

If hardware secure boot is enabled, this option is always enabled and cannot be disabled. If hardware secure boot is not enabled, this option still adds significant security against network-based attackers by preventing spoofing of OTA updates.

Default value:

- Yes (enabled) if *CONFIG_SECURE_SIGNED_APPS_NO_SECURE_BOOT*

CONFIG_SECURE_BOOT

Enable hardware Secure Boot in bootloader (READ DOCS FIRST)

Found in: Security features

Build a bootloader which enables Secure Boot on first boot.

Once enabled, Secure Boot will not boot a modified bootloader. The bootloader will only load a partition table or boot an app if the data has a verified digital signature. There are implications for reflashing updated apps once secure boot is enabled.

When enabling secure boot, JTAG and ROM BASIC Interpreter are permanently disabled by default.

Default value:

- No (disabled)

CONFIG_SECURE_BOOT_VERSION

Select secure boot version

Found in: Security features > CONFIG_SECURE_BOOT

Select the Secure Boot Version. Depends on the Chip Revision. Secure Boot V2 is the new RSA based secure boot scheme. Supported in ESP32-ECO3 (ESP32 Chip Revision 3 onwards), ESP32-S2, ESP32-C3 ECO3. Secure Boot V1 is the AES based secure boot scheme. Supported in ESP32 and ESP32-ECO3.

Available options:

- Enable Secure Boot version 1 (SECURE_BOOT_V1_ENABLED)
  Build a bootloader which enables secure boot version 1 on first boot. Refer to the Secure Boot section of the ESP-IDF Programmer's Guide for this version before enabling.
- Enable Secure Boot version 2 (SECURE_BOOT_V2_ENABLED)
  Build a bootloader which enables Secure Boot version 2 on first boot. Refer to Secure Boot V2 section of the ESP-IDF Programmer's Guide for this version before enabling.

CONFIG_SECURE_BOOTLOADER_MODE

Secure bootloader mode

Found in: Security features

Available options:

- One-time flash (SECURE_BOOTLOADER_ONE_TIME_FLASH)
  On first boot, the bootloader will generate a key which is not readable externally or by software. A digest is generated from the bootloader image itself. This digest will be verified on each subsequent boot.
  Enabling this option means that the bootloader cannot be changed after the first time it is booted.
- Reflashable (SECURE_BOOTLOADER_REFLASHABLE)
  Generate a reusable secure bootloader key, derived (via SHA-256) from the secure boot signing key.
  This allows the secure bootloader to be re-flashed by anyone with access to the secure boot signing key.
  This option is less secure than one-time flash, because a leak of the digest key from one device allows reflashing of any device that uses it.

CONFIG_SECURE_BOOT_BUILD_SIGNED_BINARIES

Sign binaries during build

Found in: Security features

Once secure boot or signed app requirement is enabled, app images are required to be signed.

If enabled (default), these binary files are signed as part of the build process. The file named in "Secure boot private signing key" will be used to sign the image.

If disabled, unsigned app/partition data will be built. They must be signed manually using espsecure.py. Version 1 to enable ECDSA Based Secure Boot and Version 2 to enable RSA based Secure Boot. (for example, on a remote signing server.)

CONFIG_SECURE_BOOT_SIGNING_KEY

Secure boot private signing key

Found in: Security features > CONFIG_SECURE_BOOT_BUILD_SIGNED_BINARIES

Path to the key file used to sign app images.

Key file is an ECDSA private key (NIST256p curve) in PEM format for Secure Boot V1. Key file is an RSA private key in PEM format for Secure Boot V2.

Path is evaluated relative to the project directory.

You can generate a new signing key by running the following command: espsecure.py generate_signing_key secure_boot_signing_key.pem

See the Secure Boot section of the ESP-IDF Programmer's Guide for this version for details.

Default value:

- "secure_boot_signing_key.pem" if *CONFIG_SECURE_BOOT_BUILD_SIGNED_BINARIES*

CONFIG_SECURE_BOOT_VERIFICATION_KEY

Secure boot public signature verification key

Found in: Security features

Path to a public key file used to verify signed images. Secure Boot V1: This ECDSA public key is compiled into the bootloader and/or app, to verify app images. Secure Boot V2: This RSA public key is compiled into the signature block at the end of the bootloader/app.

Key file is in raw binary format, and can be extracted from a PEM formatted private key using the espsecure.py extract_public_key command.

Refer to the Secure Boot section of the ESP-IDF Programmer's Guide for this version before enabling.

CONFIG_SECURE_BOOTLOADER_KEY_ENCODING

Hardware Key Encoding

Found in: Security features

In reflashable secure bootloader mode, a hardware key is derived from the signing key (with SHA-256) and can be written to eFuse with espefuse.py.

Normally this is a 256-bit key, but if 3/4 Coding Scheme is used on the device then the eFuse key is truncated to 192 bits.

This configuration item doesn't change any firmware code, it only changes the size of key binary which is generated at build time.

Available options:

- No encoding (256 bit key) (SECURE_BOOTLOADER_KEY_ENCODING_256BIT)

- 3/4 encoding (192 bit key) (SECURE_BOOTLOADER_KEY_ENCODING_192BIT)

CONFIG_SECURE_BOOT_INSECURE

Allow potentially insecure options

Found in: Security features

You can disable some of the default protections offered by secure boot, in order to enable testing or a custom combination of security features.

Only enable these options if you are very sure.

Refer to the Secure Boot section of the ESP-IDF Programmer's Guide for this version before enabling.

Default value:

- No (disabled) if *CONFIG_SECURE_BOOT*

CONFIG_SECURE_FLASH_ENC_ENABLED

Enable flash encryption on boot (READ DOCS FIRST)

Found in: Security features

If this option is set, flash contents will be encrypted by the bootloader on first boot.

Note: After first boot, the system will be permanently encrypted. Re-flashing an encrypted system is complicated and not always possible.

Read *Flash Encryption* before enabling.

Default value:

- No (disabled)

CONFIG_SECURE_FLASH_ENCRYPTION_MODE

Enable usage mode

Found in: Security features > CONFIG_SECURE_FLASH_ENC_ENABLED

By default Development mode is enabled which allows ROM download mode to perform flash encryption operations (plaintext is sent to the device, and it encrypts it internally and writes ciphertext to flash.) This mode is not secure, it's possible for an attacker to write their own chosen plaintext to flash.

Release mode should always be selected for production or manufacturing. Once enabled it's no longer possible for the device in ROM Download Mode to use the flash encryption hardware.

Refer to the Flash Encryption section of the ESP-IDF Programmer's Guide for details.

Available options:

- Development (NOT SECURE) (SECURE_FLASH_ENCRYPTION_MODE_DEVELOPMENT)
- Release (SECURE_FLASH_ENCRYPTION_MODE_RELEASE)

Potentially insecure options

Contains:

- *CONFIG_SECURE_BOOT_V2_ALLOW_EFUSE_RD_DIS*
- *CONFIG_SECURE_BOOT_ALLOW_SHORT_APP_PARTITION*
- *CONFIG_SECURE_BOOT_ALLOW_JTAG*
- *CONFIG_SECURE_BOOT_ALLOW_ROM_BASIC*
- *CONFIG_SECURE_FLASH_UART_BOOTLOADER_ALLOW_DEC*
- *CONFIG_SECURE_FLASH_UART_BOOTLOADER_ALLOW_ENC*
- *CONFIG_SECURE_FLASH_UART_BOOTLOADER_ALLOW_CACHE*
- *CONFIG_SECURE_FLASH_REQUIRE_ALREADY_ENABLED*

CONFIG_SECURE_BOOT_ALLOW_ROM_BASIC

Leave ROM BASIC Interpreter available on reset

Found in: Security features > Potentially insecure options

By default, the BASIC ROM Console starts on reset if no valid bootloader is read from the flash.

When either flash encryption or secure boot are enabled, the default is to disable this BASIC fallback mode permanently via eFuse.

If this option is set, this eFuse is not burned and the BASIC ROM Console may remain accessible. Only set this option in testing environments.

Default value:

- No (disabled) if *CONFIG_SECURE_BOOT_INSECURE* || SECURE_FLASH_ENCRYPTION_MODE_DEVELOPMENT

CONFIG_SECURE_BOOT_ALLOW_JTAG

Allow JTAG Debugging

Found in: Security features > Potentially insecure options

If not set (default), the bootloader will permanently disable JTAG (across entire chip) on first boot when either secure boot or flash encryption is enabled.

Setting this option leaves JTAG on for debugging, which negates all protections of flash encryption and some of the protections of secure boot.

Only set this option in testing environments.

Default value:

- No (disabled) if *CONFIG_SECURE_BOOT_INSECURE* || SECURE_FLASH_ENCRYPTION_MODE_DEVELOPMENT

CONFIG_SECURE_BOOT_ALLOW_SHORT_APP_PARTITION

Allow app partition length not 64KB aligned

Found in: Security features > Potentially insecure options

If not set (default), app partition size must be a multiple of 64KB. App images are padded to 64KB length, and the bootloader checks any trailing bytes after the signature (before the next 64KB boundary) have not been written. This is because flash cache maps entire 64KB pages into the address space. This prevents an attacker from appending unverified data after the app image in the flash, causing it to be mapped into the address space.

Setting this option allows the app partition length to be unaligned, and disables padding of the app image to this length. It is generally not recommended to set this option, unless you have a legacy partitioning scheme which doesn't support 64KB aligned partition lengths.

CONFIG_SECURE_BOOT_V2_ALLOW_EFUSE_RD_DIS

Allow additional read protecting of efuses

Found in: Security features > Potentially insecure options

If not set (default, recommended), on first boot the bootloader will burn the WR_DIS_RD_DIS efuse when Secure Boot is enabled. This prevents any more efuses from being read protected.

If this option is set, it will remain possible to write the EFUSE_RD_DIS efuse field after Secure Boot is enabled. This may allow an attacker to read-protect the BLK2 efuse (for ESP32) and BLOCK4-BLOCK10 (i.e. BLOCK_KEY0-BLOCK_KEY5)(for other chips) holding the public key digest, causing an immediate denial of service and possibly allowing an additional fault injection attack to bypass the signature protection.

NOTE: Once a BLOCK is read-protected, the application will read all zeros from that block

NOTE: If "UART ROM download mode (Permanently disabled (recommended))" or "UART ROM download mode (Permanently switch to Secure mode (recommended))" is set, then it is __NOT__ possible to read/write efuses using espefuse.py utility. However, efuse can be read/written from the application

CONFIG_SECURE_FLASH_UART_BOOTLOADER_ALLOW_ENC

Leave UART bootloader encryption enabled

Found in: Security features > Potentially insecure options

If not set (default), the bootloader will permanently disable UART bootloader encryption access on first boot. If set, the UART bootloader will still be able to access hardware encryption.

It is recommended to only set this option in testing environments.

Default value:

- No (disabled) if SECURE_FLASH_ENCRYPTION_MODE_DEVELOPMENT

CONFIG_SECURE_FLASH_UART_BOOTLOADER_ALLOW_DEC

Leave UART bootloader decryption enabled

Found in: Security features > Potentially insecure options

If not set (default), the bootloader will permanently disable UART bootloader decryption access on first boot. If set, the UART bootloader will still be able to access hardware decryption.

Only set this option in testing environments. Setting this option allows complete bypass of flash encryption.

Default value:

- No (disabled) if SECURE_FLASH_ENCRYPTION_MODE_DEVELOPMENT

CONFIG_SECURE_FLASH_UART_BOOTLOADER_ALLOW_CACHE

Leave UART bootloader flash cache enabled

Found in: Security features > Potentially insecure options

If not set (default), the bootloader will permanently disable UART bootloader flash cache access on first boot. If set, the UART bootloader will still be able to access the flash cache.

Only set this option in testing environments.

Default value:

- No (disabled) if SECURE_FLASH_ENCRYPTION_MODE_DEVELOPMENT

CONFIG_SECURE_FLASH_REQUIRE_ALREADY_ENABLED

Require flash encryption to be already enabled

Found in: Security features > Potentially insecure options

If not set (default), and flash encryption is not yet enabled in eFuses, the 2nd stage bootloader will enable flash encryption: generate the flash encryption key and program eFuses. If this option is set, and flash encryption is not yet enabled, the bootloader will error out and reboot. If flash encryption is enabled in eFuses, this option does not change the bootloader behavior.

Only use this option in testing environments, to avoid accidentally enabling flash encryption on the wrong device. The device needs to have flash encryption already enabled using espefuse.py.

Default value:

- No (disabled) if SECURE_FLASH_ENCRYPTION_MODE_DEVELOPMENT

CONFIG_SECURE_FLASH_CHECK_ENC_EN_IN_APP

Check Flash Encryption enabled on app startup

Found in: Security features

If set (default), in an app during startup code, there is a check of the flash encryption eFuse bit is on (as the bootloader should already have set it). The app requires this bit is on to continue work otherwise abort.

If not set, the app does not care if the flash encryption eFuse bit is set or not.

Default value:

- Yes (enabled) if *CONFIG_SECURE_FLASH_ENC_ENABLED*

CONFIG_SECURE_UART_ROM_DL_MODE

UART ROM download mode

Found in: Security features

Available options:

- UART ROM download mode (Permanently disabled (recommended)) (SECURE_DISABLE_ROM_DL_MODE)
  If set, during startup the app will burn an eFuse bit to permanently disable the UART ROM Download Mode. This prevents any future use of esptool.py, espefuse.py and similar tools.
  Once disabled, if the SoC is booted with strapping pins set for ROM Download Mode then an error is printed instead.
  It is recommended to enable this option in any production application where Flash Encryption and/or Secure Boot is enabled and access to Download Mode is not required.
  It is also possible to permanently disable Download Mode by calling esp_efuse_disable_rom_download_mode() at runtime.
- UART ROM download mode (Permanently switch to Secure mode (recommended)) (SECURE_ENABLE_SECURE_ROM_DL_MODE)
  If set, during startup the app will burn an eFuse bit to permanently switch the UART ROM Download Mode into a separate Secure Download mode. This option can only work if Download Mode is not already disabled by eFuse.
  Secure Download mode limits the use of Download Mode functions to simple flash read, write and erase operations, plus a command to return a summary of currently enabled security features.
  Secure Download mode is not compatible with the esptool.py flasher stub feature, espefuse.py, read/writing memory or registers, encrypted download, or any other features that interact with unsupported Download Mode commands.
  Secure Download mode should be enabled in any application where Flash Encryption and/or Secure Boot is enabled. Disabling this option does not immediately cancel the benefits of the security features, but it increases the potential "attack surface" for an attacker to try and bypass them with a successful physical attack.
  It is also possible to enable secure download mode at runtime by calling esp_efuse_enable_rom_secure_download_mode()
  Note: Secure Download mode is not available for ESP32 (includes revisions till ECO3).
- UART ROM download mode (Enabled (not recommended)) (SECURE_INSECURE_ALLOW_DL_MODE)
  This is a potentially insecure option. Enabling this option will allow the full UART download mode to stay enabled. This option SHOULD NOT BE ENABLED for production use cases.

Serial flasher config

Contains:

- *CONFIG_ESPTOOLPY_MONITOR_BAUD*
- *CONFIG_ESPTOOLPY_AFTER*

- *CONFIG_ESPTOOLPY_BEFORE*
- *CONFIG_ESPTOOLPY_MONITOR_BAUD_OTHER_VAL*
- *CONFIG_ESPTOOLPY_BAUD*
- *CONFIG_ESPTOOLPY_PORT*
- *CONFIG_ESPTOOLPY_FLASHSIZE_DETECT*
- *CONFIG_ESPTOOLPY_NO_STUB*
- *CONFIG_ESPTOOLPY_FLASH_SAMPLE_MODE*
- *CONFIG_ESPTOOLPY_FLASHSIZE*
- *CONFIG_ESPTOOLPY_FLASHMODE*
- *CONFIG_ESPTOOLPY_FLASHFREQ*
- *CONFIG_ESPTOOLPY_BAUD_OTHER_VAL*
- *CONFIG_ESPTOOLPY_COMPRESSED*

CONFIG_ESPTOOLPY_PORT

Default serial port

Found in: Serial flasher config

The serial port that' s connected to the ESP chip. This can be overridden by setting the ESPPORT environment variable.

This value is ignored when using the CMake-based build system or idf.py.

Default value:

- "/dev/ttyUSB0"

CONFIG_ESPTOOLPY_BAUD

Default baud rate

Found in: Serial flasher config

Default baud rate to use while communicating with the ESP chip. Can be overridden by setting the ESPBAUD variable.

This value is ignored when using the CMake-based build system or idf.py.

Available options:

- 115200 baud (ESPTOOLPY_BAUD_115200B)
- 230400 baud (ESPTOOLPY_BAUD_230400B)
- 921600 baud (ESPTOOLPY_BAUD_921600B)
- 2Mbaud (ESPTOOLPY_BAUD_2MB)
- Other baud rate (ESPTOOLPY_BAUD_OTHER)

CONFIG_ESPTOOLPY_BAUD_OTHER_VAL

Other baud rate value

Found in: Serial flasher config

Default value:

- 115200

CONFIG_ESPTOOLPY_COMPRESSED

Use compressed upload

Found in: Serial flasher config

The flasher tool can send data compressed using zlib, letting the ROM on the ESP chip decompress it on the fly before flashing it. For most payloads, this should result in a speed increase.

Default value:

- Yes (enabled)

CONFIG_ESPTOOLPY_NO_STUB

Disable download stub

Found in: Serial flasher config

The flasher tool sends a precompiled download stub first by default. That stub allows things like compressed downloads and more. Usually you should not need to disable that feature

Default value:

- No (disabled)

CONFIG_ESPTOOLPY_FLASHMODE

Flash SPI mode

Found in: Serial flasher config

Mode the flash chip is flashed in, as well as the default mode for the binary to run in.

Available options:

- QIO (ESPTOOLPY_FLASHMODE_QIO)
- QOUT (ESPTOOLPY_FLASHMODE_QOUT)
- DIO (ESPTOOLPY_FLASHMODE_DIO)
- DOUT (ESPTOOLPY_FLASHMODE_DOUT)
- OPI (ESPTOOLPY_FLASHMODE_OPI)

CONFIG_ESPTOOLPY_FLASH_SAMPLE_MODE

Flash Sampling Mode

Found in: Serial flasher config

Available options:

- STR Mode (ESPTOOLPY_FLASH_SAMPLE_MODE_STR)
- DTR Mode (ESPTOOLPY_FLASH_SAMPLE_MODE_DTR)

CONFIG_ESPTOOLPY_FLASHFREQ

Flash SPI speed

Found in: Serial flasher config

The SPI flash frequency to be used.

Available options:

- 120 MHz (ESPTOOLPY_FLASHFREQ_120M)
- 80 MHz (ESPTOOLPY_FLASHFREQ_80M)
- 40 MHz (ESPTOOLPY_FLASHFREQ_40M)
- 26 MHz (ESPTOOLPY_FLASHFREQ_26M)
- 20 MHz (ESPTOOLPY_FLASHFREQ_20M)

CONFIG_ESPTOOLPY_FLASHSIZE

Flash size

Found in: Serial flasher config

SPI flash size, in megabytes

Available options:

- 1 MB (ESPTOOLPY_FLASHSIZE_1MB)

- 2 MB (ESPTOOLPY_FLASHSIZE_2MB)
- 4 MB (ESPTOOLPY_FLASHSIZE_4MB)
- 8 MB (ESPTOOLPY_FLASHSIZE_8MB)
- 16 MB (ESPTOOLPY_FLASHSIZE_16MB)
- 32 MB (ESPTOOLPY_FLASHSIZE_32MB)
- 64 MB (ESPTOOLPY_FLASHSIZE_64MB)
- 128 MB (ESPTOOLPY_FLASHSIZE_128MB)

CONFIG_ESPTOOLPY_FLASHSIZE_DETECT

Detect flash size when flashing bootloader

Found in: Serial flasher config

If this option is set, flashing the project will automatically detect the flash size of the target chip and update the bootloader image before it is flashed.

Default value:

- Yes (enabled)

CONFIG_ESPTOOLPY_BEFORE

Before flashing

Found in: Serial flasher config

Configure whether esptool.py should reset the ESP32 before flashing.

Automatic resetting depends on the RTS & DTR signals being wired from the serial port to the ESP32. Most USB development boards do this internally.

Available options:

- Reset to bootloader (ESPTOOLPY_BEFORE_RESET)
- No reset (ESPTOOLPY_BEFORE_NORESET)

CONFIG_ESPTOOLPY_AFTER

After flashing

Found in: Serial flasher config

Configure whether esptool.py should reset the ESP32 after flashing.

Automatic resetting depends on the RTS & DTR signals being wired from the serial port to the ESP32. Most USB development boards do this internally.

Available options:

- Reset after flashing (ESPTOOLPY_AFTER_RESET)
- Stay in bootloader (ESPTOOLPY_AFTER_NORESET)

CONFIG_ESPTOOLPY_MONITOR_BAUD

‘idf.py monitor’ baud rate

Found in: Serial flasher config

Baud rate to use when running ‘idf.py monitor’ or ‘make monitor’ to view serial output from a running chip.

If “Same as UART Console baud rate” is chosen then the value will follow the “UART Console baud rate” config item.

Can override by setting the MONITORBAUD environment variable.

Available options:

- Same as UART console baud rate (ESPTOOLPY_MONITOR_BAUD_CONSOLE)
- 9600 bps (ESPTOOLPY_MONITOR_BAUD_9600B)
- 57600 bps (ESPTOOLPY_MONITOR_BAUD_57600B)
- 115200 bps (ESPTOOLPY_MONITOR_BAUD_115200B)
- 230400 bps (ESPTOOLPY_MONITOR_BAUD_230400B)
- 921600 bps (ESPTOOLPY_MONITOR_BAUD_921600B)
- 2 Mbps (ESPTOOLPY_MONITOR_BAUD_2MB)
- Custom baud rate (ESPTOOLPY_MONITOR_BAUD_OTHER)

CONFIG_ESPTOOLPY_MONITOR_BAUD_OTHER_VAL

Custom baud rate value

Found in: Serial flasher config

Default value:

- 115200

Partition Table

Contains:

- *CONFIG_PARTITION_TABLE_CUSTOM_FILENAME*
- *CONFIG_PARTITION_TABLE_MD5*
- *CONFIG_PARTITION_TABLE_OFFSET*
- *CONFIG_PARTITION_TABLE_TYPE*

CONFIG_PARTITION_TABLE_TYPE

Partition Table

Found in: Partition Table

The partition table to flash to the ESP32. The partition table determines where apps, data and other resources are expected to be found.

The predefined partition table CSV descriptions can be found in the components/partition_table directory. These are mostly intended for example and development use, it's expect that for production use you will copy one of these CSV files and create a custom partition CSV for your application.

Available options:

- Single factory app, no OTA (PARTITION_TABLE_SINGLE_APP)
  This is the default partition table, designed to fit into a 2MB or larger flash with a single 1MB app partition.
  The corresponding CSV file in the IDF directory is components/partition_table/partitions_singleapp.csv
  This partition table is not suitable for an app that needs OTA (over the air update) capability.
- Single factory app (large), no OTA (PARTITION_TABLE_SINGLE_APP_LARGE)
  This is a variation of the default partition table, that expands the 1MB app partition size to 1.5MB to fit more code.
  The corresponding CSV file in the IDF directory is components/partition_table/partitions_singleapp_large.csv
  This partition table is not suitable for an app that needs OTA (over the air update) capability.
- Factory app, two OTA definitions (PARTITION_TABLE_TWO_OTA)
  This is a basic OTA-enabled partition table with a factory app partition plus two OTA app partitions. All are 1MB, so this partition table requires 4MB or larger flash size.
  The corresponding CSV file in the IDF directory is components/partition_table/partitions_two_ota.csv
- Custom partition table CSV (PARTITION_TABLE_CUSTOM)
  Specify the path to the partition table CSV to use for your project.
  Consult the Partition Table section in the ESP-IDF Programmers Guide for more information.

- Single factory app, no OTA, encrypted NVS (PARTITION_TABLE_SINGLE_APP_ENCRYPTED_NVS)
  This is a variation of the default "Single factory app, no OTA" partition table that supports encrypted NVS when using flash encryption. See the Flash Encryption section in the ESP-IDF Programmers Guide for more information.
  The corresponding CSV file in the IDF directory is components/partition_table/partitions_singleapp_encr_nvs.csv
- Single factory app (large), no OTA, encrypted NVS (PARTITION_TABLE_SINGLE_APP_LARGE_ENC_NVS)
  This is a variation of the "Single factory app (large), no OTA" partition table that supports encrypted NVS when using flash encryption. See the Flash Encryption section in the ESP-IDF Programmers Guide for more information.
  The corresponding CSV file in the IDF directory is components/partition_table/partitions_singleapp_large_encr_nvs.csv
- Factory app, two OTA definitions, encrypted NVS (PARTITION_TABLE_TWO_OTA_ENCRYPTED_NVS)
  This is a variation of the "Factory app, two OTA definitions" partition table that supports encrypted NVS when using flash encryption. See the Flash Encryption section in the ESP-IDF Programmers Guide for more information.
  The corresponding CSV file in the IDF directory is components/partition_table/partitions_two_ota_encr_nvs.csv

CONFIG_PARTITION_TABLE_CUSTOM_FILENAME

Custom partition CSV file

Found in: Partition Table

Name of the custom partition CSV filename. This path is evaluated relative to the project root directory.

Default value:

- "partitions.csv"

CONFIG_PARTITION_TABLE_OFFSET

Offset of partition table

Found in: Partition Table

The address of partition table (by default 0x8000). Allows you to move the partition table, it gives more space for the bootloader. Note that the bootloader and app will both need to be compiled with the same PARTITION_TABLE_OFFSET value.

This number should be a multiple of 0x1000.

Note that partition offsets in the partition table CSV file may need to be changed if this value is set to a higher value. To have each partition offset adapt to the configured partition table offset, leave all partition offsets blank in the CSV file.

Default value:

- "0x8000"

CONFIG_PARTITION_TABLE_MD5

Generate an MD5 checksum for the partition table

Found in: Partition Table

Generate an MD5 checksum for the partition table for protecting the integrity of the table. The generation should be turned off for legacy bootloaders which cannot recognize the MD5 checksum in the partition table.

Default value:

- Yes (enabled) if *CONFIG_ESP32_COMPATIBLE_PRE_V3_1_BOOTLOADERS*

Compiler options

Contains:

- *CONFIG_COMPILER_OPTIMIZATION_ASSERTION_LEVEL*
- *CONFIG_COMPILER_OPTIMIZATION_CHECKS_SILENT*
- *CONFIG_COMPILER_DISABLE_GCC8_WARNINGS*
- *CONFIG_COMPILER_DUMP_RTL_FILES*
- *CONFIG_COMPILER_WARN_WRITE_STRINGS*
- *CONFIG_COMPILER_CXX_EXCEPTIONS*
- *CONFIG_COMPILER_CXX_RTTI*
- *CONFIG_COMPILER_OPTIMIZATION*
- *CONFIG_COMPILER_HIDE_PATHS_MACROS*
- *CONFIG_COMPILER_STACK_CHECK_MODE*

CONFIG_COMPILER_OPTIMIZATION

Optimization Level

Found in: Compiler options

This option sets compiler optimization level (gcc -O argument) for the app.

- The "Default" setting will add the -0g flag to CFLAGS.
- The "Size" setting will add the -0s flag to CFLAGS.
- The "Performance" setting will add the -O2 flag to CFLAGS.
- The "None" setting will add the -O0 flag to CFLAGS.

The "Size" setting cause the compiled code to be smaller and faster, but may lead to difficulties of correlating code addresses to source file lines when debugging.

The "Performance" setting causes the compiled code to be larger and faster, but will be easier to correlated code addresses to source file lines.

"None" with -O0 produces compiled code without optimization.

Note that custom optimization levels may be unsupported.

Compiler optimization for the IDF bootloader is set separately, see the BOOTLOADER_COMPILER_OPTIMIZATION setting.

Available options:

- Debug (-Og) (COMPILER_OPTIMIZATION_DEFAULT)
- Optimize for size (-Os) (COMPILER_OPTIMIZATION_SIZE)
- Optimize for performance (-O2) (COMPILER_OPTIMIZATION_PERF)
- Debug without optimization (-O0) (COMPILER_OPTIMIZATION_NONE)

CONFIG_COMPILER_OPTIMIZATION_ASSERTION_LEVEL

Assertion level

Found in: Compiler options

Assertions can be:

- Enabled. Failure will print verbose assertion details. This is the default.
- Set to "silent" to save code size (failed assertions will abort() but user needs to use the aborting address to find the line number with the failed assertion.)
- Disabled entirely (not recommended for most configurations.) -DNDEBUG is added to CPPFLAGS in this case.

Available options:

- Enabled (COMPILER_OPTIMIZATION_ASSERTIONS_ENABLE)
  Enable assertions. Assertion content and line number will be printed on failure.
- Silent (saves code size) (COMPILER_OPTIMIZATION_ASSERTIONS_SILENT)
  Enable silent assertions. Failed assertions will abort(), user needs to use the aborting address to find the line number with the failed assertion.
- Disabled (sets -DNDEBUG) (COMPILER_OPTIMIZATION_ASSERTIONS_DISABLE)
  If assertions are disabled, -DNDEBUG is added to CPPFLAGS.

CONFIG_COMPILER_OPTIMIZATION_CHECKS_SILENT

Disable messages in ESP_RETURN_ON_* and ESP_EXIT_ON_* macros

Found in: Compiler options

If enabled, the error messages will be discarded in following check macros: - ESP_RETURN_ON_ERROR - ESP_EXIT_ON_ERROR - ESP_RETURN_ON_FALSE - ESP_EXIT_ON_FALSE

Default value:

- No (disabled)

CONFIG_COMPILER_HIDE_PATHS_MACROS

Replace ESP-IDF and project paths in binaries

Found in: Compiler options

When expanding the __FILE__ and __BASE_FILE__ macros, replace paths inside ESP-IDF with paths relative to the placeholder string "IDF", and convert paths inside the project directory to relative paths.

This allows building the project with assertions or other code that embeds file paths, without the binary containing the exact path to the IDF or project directories.

This option passes -fmacro-prefix-map options to the GCC command line. To replace additional paths in your binaries, modify the project CMakeLists.txt file to pass custom -fmacro-prefix-map or -ffile-prefix-map arguments.

CONFIG_COMPILER_CXX_EXCEPTIONS

Enable C++ exceptions

Found in: Compiler options

Enabling this option compiles all IDF C++ files with exception support enabled.

Disabling this option disables C++ exception support in all compiled files, and any libstdc++ code which throws an exception will abort instead.

Enabling this option currently adds an additional ~500 bytes of heap overhead when an exception is thrown in user code for the first time.

Default value:

- No (disabled)

Contains:

- *CONFIG_COMPILER_CXX_EXCEPTIONS_EMG_POOL_SIZE*

CONFIG_COMPILER_CXX_EXCEPTIONS_EMG_POOL_SIZE

Emergency Pool Size

Found in: Compiler options > CONFIG_COMPILER_CXX_EXCEPTIONS

Size (in bytes) of the emergency memory pool for C++ exceptions. This pool will be used to allocate memory for thrown exceptions when there is not enough memory on the heap.

Default value:

- 0 if *CONFIG_COMPILER_CXX_EXCEPTIONS*

CONFIG_COMPILER_CXX_RTTI

Enable C++ run-time type info (RTTI)

Found in: Compiler options

Enabling this option compiles all C++ files with RTTI support enabled. This increases binary size (typically by tens of kB) but allows using dynamic_cast conversion and typeid operator.

Default value:

- No (disabled)

CONFIG_COMPILER_STACK_CHECK_MODE

Stack smashing protection mode

Found in: Compiler options

Stack smashing protection mode. Emit extra code to check for buffer overflows, such as stack smashing attacks. This is done by adding a guard variable to functions with vulnerable objects. The guards are initialized when a function is entered and then checked when the function exits. If a guard check fails, program is halted. Protection has the following modes:

- In NORMAL mode (GCC flag: -fstack-protector) only functions that call alloca, and functions with buffers larger than 8 bytes are protected.
- STRONG mode (GCC flag: -fstack-protector-strong) is like NORMAL, but includes additional functions to be protected –those that have local array definitions, or have references to local frame addresses.
- In OVERALL mode (GCC flag: -fstack-protector-all) all functions are protected.

Modes have the following impact on code performance and coverage:

- performance: NORMAL > STRONG > OVERALL
- coverage: NORMAL < STRONG < OVERALL

The performance impact includes increasing the amount of stack memory required for each task.

Available options:

- None (COMPILER_STACK_CHECK_MODE_NONE)
- Normal (COMPILER_STACK_CHECK_MODE_NORM)
- Strong (COMPILER_STACK_CHECK_MODE_STRONG)
- Overall (COMPILER_STACK_CHECK_MODE_ALL)

CONFIG_COMPILER_WARN_WRITE_STRINGS

Enable -Wwrite-strings warning flag

Found in: Compiler options

Adds -Wwrite-strings flag for the C/C++ compilers.

For C, this gives string constants the type `const char[]` so that copying the address of one into a non-const `char *` pointer produces a warning. This warning helps to find at compile time code that tries to write into a string constant.

For C++, this warns about the deprecated conversion from string literals to `char *`.

Default value:

- No (disabled)

CONFIG_COMPILER_DISABLE_GCC8_WARNINGS

Disable new warnings introduced in GCC 6 - 8

Found in: Compiler options

Enable this option if using GCC 6 or newer, and wanting to disable warnings which don't appear with GCC 5.

Default value:

- No (disabled)

CONFIG_COMPILER_DUMP_RTL_FILES

Dump RTL files during compilation

Found in: Compiler options

If enabled, RTL files will be produced during compilation. These files can be used by other tools, for example to calculate call graphs.

Component config

Contains:

- *ADC-Calibration*
- *Application Level Tracing*
- *Bluetooth*
- *CoAP Configuration*
- *Common ESP-related*
- *Core dump*
- *Driver configurations*
- *eFuse Bit Manager*
- *CONFIG_BLE_MESH*
- *ESP HTTP client*
- *ESP HTTPS OTA*
- *ESP HTTPS server*
- *ESP NETIF Adapter*
- *ESP Ringbuf*
- *ESP System Settings*
- *ESP-ASIO*
- *ESP-MQTT Configurations*
- *ESP-TLS*
- *ESP32-specific*
- *Ethernet*
- *Event Loop Library*
- *FAT Filesystem support*
- *FreeRTOS*
- *GDB Stub*
- *Hardware Abstraction Layer (HAL) and Low Level (LL)*
- *Hardware Settings*
- *Heap memory debugging*
- *High resolution timer (esp_timer)*
- *HTTP Server*
- *IPC (Inter-Processor Call)*
- *jsmn*
- *LCD and Touch Panel*
- *libsodium*
- *Log output*
- *LWIP*
- *mbedTLS*

- *mDNS*
- *Modbus configuration*
- *Newlib*
- *NVS*
- *OpenSSL*
- *OpenThread*
- *PHY*
- *Power Management*
- *PThreads*
- *SPI Flash driver*
- *SPIFFS Configuration*
- *Supplicant*
- *TCP Transport*
- *Unity unit testing library*
- *Virtual file system*
- *Wear Levelling*
- *Wi-Fi*
- *Wi-Fi Provisioning Manager*

Application Level Tracing Contains:

- *CONFIG_APPTRACE_DESTINATION*
- *FreeRTOS SystemView Tracing*
- *CONFIG_APPTRACE_GCOV_ENABLE*
- *CONFIG_APPTRACE_BUF_SIZE*
- *CONFIG_APPTRACE_PENDING_DATA_SIZE_MAX*
- *CONFIG_APPTRACE_POSTMORTEM_FLUSH_THRESH*
- *CONFIG_APPTRACE_ONPANIC_HOST_FLUSH_TMO*

CONFIG_APPTRACE_DESTINATION

Data Destination

Found in: Component config > Application Level Tracing

Select destination for application trace: JTAG or none (to disable).

Available options:

- JTAG (APPTRACE_DEST_JTAG)
- None (APPTRACE_DEST_NONE)

CONFIG_APPTRACE_ONPANIC_HOST_FLUSH_TMO

Timeout for flushing last trace data to host on panic

Found in: Component config > Application Level Tracing

Timeout for flushing last trace data to host in case of panic. In ms. Use -1 to disable timeout and wait forever.

CONFIG_APPTRACE_POSTMORTEM_FLUSH_THRESH

Threshold for flushing last trace data to host on panic

Found in: Component config > Application Level Tracing

Threshold for flushing last trace data to host on panic in post-mortem mode. This is minimal amount of data needed to perform flush. In bytes.

CONFIG_APPTRACE_BUF_SIZE

Size of the apptrace buffer

Found in: Component config > Application Level Tracing

Size of the memory buffer for trace data in bytes.

CONFIG_APPTRACE_PENDING_DATA_SIZE_MAX

Size of the pending data buffer

Found in: Component config > Application Level Tracing

Size of the buffer for events in bytes. It is useful for buffering events from the time critical code (scheduler, ISRs etc). If this parameter is 0 then events will be discarded when main HW buffer is full.

FreeRTOS SystemView Tracing

Contains:

- *CONFIG_APPTRACE_SV_ENABLE*

CONFIG_APPTRACE_SV_ENABLE

SystemView Tracing Enable

Found in: Component config > Application Level Tracing > FreeRTOS SystemView Tracing

Enables supporrt for SEGGER SystemView tracing functionality.

CONFIG_APPTRACE_SV_TS_SOURCE

Timer to use as timestamp source

Found in: Component config > Application Level Tracing > FreeRTOS SystemView Tracing > CONFIG_APPTRACE_SV_ENABLE

SystemView needs to use a hardware timer as the source of timestamps when tracing. This option selects the timer for it.

Available options:

- CPU cycle counter (CCOUNT) (APPTRACE_SV_TS_SOURCE_CCOUNT)
- Timer 0, Group 0 (APPTRACE_SV_TS_SOURCE_TIMER_00)
- Timer 1, Group 0 (APPTRACE_SV_TS_SOURCE_TIMER_01)
- Timer 0, Group 1 (APPTRACE_SV_TS_SOURCE_TIMER_10)
- Timer 1, Group 1 (APPTRACE_SV_TS_SOURCE_TIMER_11)
- esp_timer high resolution timer (APPTRACE_SV_TS_SOURCE_ESP_TIMER)

CONFIG_APPTRACE_SV_MAX_TASKS

Maximum supported tasks

Found in: Component config > Application Level Tracing > FreeRTOS SystemView Tracing > CONFIG_APPTRACE_SV_ENABLE

Configures maximum supported tasks in sysview debug

CONFIG_APPTRACE_SV_BUF_WAIT_TMO

Trace buffer wait timeout

Found in: Component config > Application Level Tracing > FreeRTOS SystemView Tracing > CONFIG_APPTRACE_SV_ENABLE

Configures timeout (in us) to wait for free space in trace buffer. Set to -1 to wait forever and avoid lost events.

CONFIG_APPTRACE_SV_EVT_OVERFLOW_ENABLE

Trace Buffer Overflow Event

Found in: Component config > Application Level Tracing > FreeRTOS SystemView Tracing > CONFIG_APPTRACE_SV_ENABLE

Enables "Trace Buffer Overflow" event.

CONFIG_APPTRACE_SV_EVT_ISR_ENTER_ENABLE

ISR Enter Event

Found in: Component config > Application Level Tracing > FreeRTOS SystemView Tracing > CONFIG_APPTRACE_SV_ENABLE

Enables "ISR Enter" event.

CONFIG_APPTRACE_SV_EVT_ISR_EXIT_ENABLE

ISR Exit Event

Found in: Component config > Application Level Tracing > FreeRTOS SystemView Tracing > CONFIG_APPTRACE_SV_ENABLE

Enables "ISR Exit" event.

CONFIG_APPTRACE_SV_EVT_ISR_TO_SCHED_ENABLE

ISR Exit to Scheduler Event

Found in: Component config > Application Level Tracing > FreeRTOS SystemView Tracing > CONFIG_APPTRACE_SV_ENABLE

Enables "ISR to Scheduler" event.

CONFIG_APPTRACE_SV_EVT_TASK_START_EXEC_ENABLE

Task Start Execution Event

Found in: Component config > Application Level Tracing > FreeRTOS SystemView Tracing > CONFIG_APPTRACE_SV_ENABLE

Enables "Task Start Execution" event.

CONFIG_APPTRACE_SV_EVT_TASK_STOP_EXEC_ENABLE

Task Stop Execution Event

Found in: Component config > Application Level Tracing > FreeRTOS SystemView Tracing > CONFIG_APPTRACE_SV_ENABLE

Enables "Task Stop Execution" event.

CONFIG_APPTRACE_SV_EVT_TASK_START_READY_ENABLE

Task Start Ready State Event

Found in: Component config > Application Level Tracing > FreeRTOS SystemView Tracing > CONFIG_APPTRACE_SV_ENABLE

Enables "Task Start Ready State" event.

CONFIG_APPTRACE_SV_EVT_TASK_STOP_READY_ENABLE

Task Stop Ready State Event

Found in: Component config > Application Level Tracing > FreeRTOS SystemView Tracing > CONFIG_APPTRACE_SV_ENABLE

Enables "Task Stop Ready State" event.

CONFIG_APPTRACE_SV_EVT_TASK_CREATE_ENABLE

Task Create Event

Found in: Component config > Application Level Tracing > FreeRTOS SystemView Tracing > CONFIG_APPTRACE_SV_ENABLE

Enables "Task Create" event.

CONFIG_APPTRACE_SV_EVT_TASK_TERMINATE_ENABLE

Task Terminate Event

Found in: Component config > Application Level Tracing > FreeRTOS SystemView Tracing > CONFIG_APPTRACE_SV_ENABLE

Enables "Task Terminate" event.

CONFIG_APPTRACE_SV_EVT_IDLE_ENABLE

System Idle Event

Found in: Component config > Application Level Tracing > FreeRTOS SystemView Tracing > CONFIG_APPTRACE_SV_ENABLE

Enables "System Idle" event.

CONFIG_APPTRACE_SV_EVT_TIMER_ENTER_ENABLE

Timer Enter Event

Found in: Component config > Application Level Tracing > FreeRTOS SystemView Tracing > CONFIG_APPTRACE_SV_ENABLE

Enables "Timer Enter" event.

CONFIG_APPTRACE_SV_EVT_TIMER_EXIT_ENABLE

Timer Exit Event

Found in: Component config > Application Level Tracing > FreeRTOS SystemView Tracing > CONFIG_APPTRACE_SV_ENABLE

Enables "Timer Exit" event.

CONFIG_APPTRACE_GCOV_ENABLE

GCOV to Host Enable

Found in: Component config > Application Level Tracing

Enables support for GCOV data transfer to host.

ESP-ASIO Contains:

- *CONFIG_ASIO_SSL_SUPPORT*

CONFIG_ASIO_SSL_SUPPORT

Enable SSL/TLS support of ASIO

Found in: Component config > ESP-ASIO

Enable support for basic SSL/TLS features, available for mbedTLS/OpenSSL as well as wolfSSL TLS library.

Default value:

- No (disabled)

CONFIG_ASIO_SSL_LIBRARY_CHOICE

Choose SSL/TLS library for ESP-TLS (See help for more Info)

Found in: Component config > ESP-ASIO > CONFIG_ASIO_SSL_SUPPORT

The ASIO support multiple backend TLS libraries. Currently the mbedTLS with a thin ESP-OpenSSL port layer (default choice) and WolfSSL are supported. Different TLS libraries may support different features and have different resource usage. Consult the ESP-TLS documentation in ESP-IDF Programming guide for more details.

Available options:

- esp-openssl (ASIO_USE_ESP_OPENSSL)
- wolfSSL (License info in wolfSSL directory README) (ASIO_USE_ESP_WOLFSSL)

Bluetooth Contains:

- *Bluedroid Options*
- *CONFIG_BT_ENABLED*
- *NimBLE Options*

CONFIG_BT_ENABLED

Bluetooth

Found in: Component config > Bluetooth

Select this option to enable Bluetooth and show the submenu with Bluetooth configuration choices.

Bluetooth controller Contains:

- *CONFIG_BTDM_CTRL_AUTO_LATENCY*
- *CONFIG_BTDM_BLE_ADV_REPORT_FLOW_CTRL_SUPP*
- *CONFIG_BTDM_CTRL_FULL_SCAN_SUPPORTED*
- *CONFIG_BTDM_CTRL_BLE_MAX_CONN*
- *CONFIG_BTDM_BLE_SCAN_DUPL*
- *CONFIG_BTDM_BLE_SLEEP_CLOCK_ACCURACY*
- *CONFIG_BTDM_CTRL_MODE*

- *CONFIG_BTDM_CTRL_BR_EDR_MAX_ACL_CONN*
- *CONFIG_BTDM_CTRL_BR_EDR_SCO_DATA_PATH*
- *CONFIG_BTDM_CTRL_BR_EDR_MAX_SYNC_CONN*
- *CONFIG_BTDM_CTRL_HCI_MODE_CHOICE*
- *HCI UART(H4) Options*
- *CONFIG_BTDM_CTRL_HLI*
- *CONFIG_BTDM_CTRL_LEGACY_AUTH_VENDOR_EVT*
- *MODEM SLEEP Options*
- *CONFIG_BTDM_CTRL_PCM_ROLE_EDGE_CONFIG*
- *CONFIG_BTDM_CTRL_PINNED_TO_CORE_CHOICE*

CONFIG_BTDM_CTRL_MODE

Bluetooth controller mode (BR/EDR/BLE/DUALMODE)

Found in: Component config > Bluetooth > CONFIG_BT_ENABLED > Bluetooth controller

Specify the bluetooth controller mode (BR/EDR, BLE or dual mode).

Available options:
- BLE Only (BTDM_CTRL_MODE_BLE_ONLY)
- BR/EDR Only (BTDM_CTRL_MODE_BR_EDR_ONLY)
- Bluetooth Dual Mode (BTDM_CTRL_MODE_BTDM)

CONFIG_BTDM_CTRL_BLE_MAX_CONN

BLE Max Connections

Found in: Component config > Bluetooth > CONFIG_BT_ENABLED > Bluetooth controller

BLE maximum connections of bluetooth controller. Each connection uses 1KB static DRAM whenever the BT controller is enabled.

Range:
- from 1 to 9 if (BTDM_CTRL_MODE_BLE_ONLY || BTDM_CTRL_MODE_BTDM) && *CONFIG_BT_ENABLED*

Default value:
- 3 if (BTDM_CTRL_MODE_BLE_ONLY || BTDM_CTRL_MODE_BTDM) && *CONFIG_BT_ENABLED*

CONFIG_BTDM_CTRL_BR_EDR_MAX_ACL_CONN

BR/EDR ACL Max Connections

Found in: Component config > Bluetooth > CONFIG_BT_ENABLED > Bluetooth controller

BR/EDR ACL maximum connections of bluetooth controller. Each connection uses 1.2 KB DRAM whenever the BT controller is enabled.

Range:
- from 1 to 7 if (BTDM_CTRL_MODE_BR_EDR_ONLY || BTDM_CTRL_MODE_BTDM) && *CONFIG_BT_ENABLED*

Default value:
- 2 if (BTDM_CTRL_MODE_BR_EDR_ONLY || BTDM_CTRL_MODE_BTDM) && *CONFIG_BT_ENABLED*

CONFIG_BTDM_CTRL_BR_EDR_MAX_SYNC_CONN

BR/EDR Sync(SCO/eSCO) Max Connections

Found in: Component config > Bluetooth > CONFIG_BT_ENABLED > Bluetooth controller

BR/EDR Synchronize maximum connections of bluetooth controller. Each connection uses 2 KB DRAM whenever the BT controller is enabled.

Range:

- from 0 to 3 if (BTDM_CTRL_MODE_BR_EDR_ONLY || BTDM_CTRL_MODE_BTDM) && *CONFIG_BT_ENABLED*

Default value:

- 0 if (BTDM_CTRL_MODE_BR_EDR_ONLY || BTDM_CTRL_MODE_BTDM) && *CONFIG_BT_ENABLED*

CONFIG_BTDM_CTRL_BR_EDR_SCO_DATA_PATH

BR/EDR Sync(SCO/eSCO) default data path

Found in: Component config > Bluetooth > CONFIG_BT_ENABLED > Bluetooth controller

SCO data path, i.e. HCI or PCM. SCO data can be sent/received through HCI synchronous packets, or the data can be routed to on-chip PCM module on ESP32. PCM input/output signals can be "matrixed" to GPIOs. The default data path can also be set using API "esp_bredr_sco_datapath_set"

Available options:

- HCI (BTDM_CTRL_BR_EDR_SCO_DATA_PATH_HCI)
- PCM (BTDM_CTRL_BR_EDR_SCO_DATA_PATH_PCM)

CONFIG_BTDM_CTRL_PCM_ROLE_EDGE_CONFIG

PCM Signal Config (Role and Polar)

Found in: Component config > Bluetooth > CONFIG_BT_ENABLED > Bluetooth controller

Default value:

- Yes (enabled) if BTDM_CTRL_BR_EDR_SCO_DATA_PATH_PCM && *CONFIG_BT_ENABLED*

Contains:

- *CONFIG_BTDM_CTRL_PCM_POLAR*
- *CONFIG_BTDM_CTRL_PCM_ROLE*

CONFIG_BTDM_CTRL_PCM_ROLE

PCM Role

Found in: Component config > Bluetooth > CONFIG_BT_ENABLED > Bluetooth controller > CONFIG_BTDM_CTRL_PCM_ROLE_EDGE_CONFIG

PCM role can be configured as PCM master or PCM slave

Available options:

- PCM Master (BTDM_CTRL_PCM_ROLE_MASTER)
- PCM Slave (BTDM_CTRL_PCM_ROLE_SLAVE)

CONFIG_BTDM_CTRL_PCM_POLAR

PCM Polar

Found in: Component config > Bluetooth > CONFIG_BT_ENABLED > Bluetooth controller > CONFIG_BTDM_CTRL_PCM_ROLE_EDGE_CONFIG

PCM polarity can be configured as Falling Edge or Rising Edge

Available options:

- Falling Edge (BTDM_CTRL_PCM_POLAR_FALLING_EDGE)
- Rising Edge (BTDM_CTRL_PCM_POLAR_RISING_EDGE)

CONFIG_BTDM_CTRL_AUTO_LATENCY

Auto latency

Found in: Component config > Bluetooth > CONFIG_BT_ENABLED > Bluetooth controller

BLE auto latency, used to enhance classic BT performance while classic BT and BLE are enabled at the same time.

Default value:

- No (disabled) if BTDM_CTRL_MODE_BTDM && *CONFIG_BT_ENABLED*

CONFIG_BTDM_CTRL_LEGACY_AUTH_VENDOR_EVT

Legacy Authentication Vendor Specific Event Enable

Found in: Component config > Bluetooth > CONFIG_BT_ENABLED > Bluetooth controller

To protect from BIAS attack during Legacy authentication, Legacy authentication Vendor specific event should be enabled

Default value:

- Yes (enabled) if (BTDM_CTRL_MODE_BR_EDR_ONLY || BTDM_CTRL_MODE_BTDM) && *CONFIG_BT_ENABLED*

CONFIG_BTDM_CTRL_PINNED_TO_CORE_CHOICE

The cpu core which bluetooth controller run

Found in: Component config > Bluetooth > CONFIG_BT_ENABLED > Bluetooth controller

Specify the cpu core to run bluetooth controller. Can not specify no-affinity.

Available options:

- Core 0 (PRO CPU) (BTDM_CTRL_PINNED_TO_CORE_0)
- Core 1 (APP CPU) (BTDM_CTRL_PINNED_TO_CORE_1)

CONFIG_BTDM_CTRL_HCI_MODE_CHOICE

HCI mode

Found in: Component config > Bluetooth > CONFIG_BT_ENABLED > Bluetooth controller

Speicify HCI mode as VHCI or UART(H4)

Available options:

- VHCI (BTDM_CTRL_HCI_MODE_VHCI)
  Normal option. Mostly, choose this VHCI when bluetooth host run on ESP32, too.
- UART(H4) (BTDM_CTRL_HCI_MODE_UART_H4)
  If use external bluetooth host which run on other hardware and use UART as the HCI interface, choose this option.

HCI UART(H4) Options

Contains:

- *CONFIG_BTDM_CTRL_HCI_UART_BAUDRATE*
- *CONFIG_BTDM_CTRL_HCI_UART_NO*

CONFIG_BTDM_CTRL_HCI_UART_NO

UART Number for HCI

Found in: Component config > Bluetooth > CONFIG_BT_ENABLED > Bluetooth controller > HCI UART(H4) Options

Uart number for HCI. The available uart is UART1 and UART2.

Range:
- from 1 to 2 if BTDM_CTRL_HCI_MODE_UART_H4 && *CONFIG_BT_ENABLED*

Default value:
- 1 if BTDM_CTRL_HCI_MODE_UART_H4 && *CONFIG_BT_ENABLED*

CONFIG_BTDM_CTRL_HCI_UART_BAUDRATE

UART Baudrate for HCI

Found in: Component config > Bluetooth > CONFIG_BT_ENABLED > Bluetooth controller > HCI UART(H4) Options

UART Baudrate for HCI. Please use standard baudrate.

Range:
- from 115200 to 921600 if BTDM_CTRL_HCI_MODE_UART_H4 && *CONFIG_BT_ENABLED*

Default value:
- 921600 if BTDM_CTRL_HCI_MODE_UART_H4 && *CONFIG_BT_ENABLED*

MODEM SLEEP Options

Contains:

- *CONFIG_BTDM_CTRL_LOW_POWER_CLOCK*
- *CONFIG_BTDM_CTRL_MODEM_SLEEP*

CONFIG_BTDM_CTRL_MODEM_SLEEP

Bluetooth modem sleep

Found in: Component config > Bluetooth > CONFIG_BT_ENABLED > Bluetooth controller > MODEM SLEEP Options

Enable/disable bluetooth controller low power mode.

Default value:
- Yes (enabled) if *CONFIG_BT_ENABLED*

CONFIG_BTDM_CTRL_MODEM_SLEEP_MODE

Bluetooth Modem sleep mode

Found in: Component config > Bluetooth > CONFIG_BT_ENABLED > Bluetooth controller > MODEM SLEEP Options > CONFIG_BTDM_CTRL_MODEM_SLEEP

To select which strategy to use for modem sleep

Available options:
- ORIG Mode(sleep with low power clock) (BTDM_CTRL_MODEM_SLEEP_MODE_ORIG)
  ORIG mode is a bluetooth sleep mode that can be used for dual mode controller. In this mode, bluetooth controller sleeps between BR/EDR frames and BLE events. A low power clock is used to maintain bluetooth reference clock.
- EVED Mode(For internal test only) (BTDM_CTRL_MODEM_SLEEP_MODE_EVED)
  EVED mode is for BLE only and is only for internal test. Do not use it for production. this mode is not compatible with DFS nor light sleep

CONFIG_BTDM_CTRL_LOW_POWER_CLOCK

Bluetooth low power clock

Found in: Component config > Bluetooth > CONFIG_BT_ENABLED > Bluetooth controller > MODEM SLEEP Options

Select the low power clock source for bluetooth controller. Bluetooth low power clock is the clock source to maintain time in sleep mode.

- "Main crystal" option provides good accuracy and can support Dynamic Frequency Scaling to be used with Bluetooth modem sleep. Light sleep is not supported.
- "External 32kHz crystal" option allows user to use a 32.768kHz crystal as Bluetooth low power clock. This option is allowed as long as External 32kHz crystal is configured as the system RTC clock source. This option provides good accuracy and supports Bluetooth modem sleep to be used alongside Dynamic Frequency Scaling or light sleep.

Available options:

- Main crystal (BTDM_CTRL_LPCLK_SEL_MAIN_XTAL)
  Main crystal can be used as low power clock for bluetooth modem sleep. If this option is selected, bluetooth modem sleep can work under Dynamic Frequency Scaling(DFS) enabled, but cannot work when light sleep is enabled. Main crystal has a good performance in accuracy as the bluetooth low power clock source.
- External 32kHz crystal (BTDM_CTRL_LPCLK_SEL_EXT_32K_XTAL)
  External 32kHz crystal has a nominal frequency of 32.768kHz and provides good frequency stability. If used as Bluetooth low power clock, External 32kHz can support Bluetooth modem sleep to be used with both DFS and light sleep.

CONFIG_BTDM_BLE_SLEEP_CLOCK_ACCURACY

BLE Sleep Clock Accuracy

Found in: Component config > Bluetooth > CONFIG_BT_ENABLED > Bluetooth controller

BLE Sleep Clock Accuracy(SCA) for the local device is used to estimate window widening in BLE connection events. With a lower level of clock accuracy(e.g. 500ppm over 250ppm), the slave needs a larger RX window to synchronize with master in each anchor point, thus resulting in an increase of power consumption but a higher level of robustness in keeping connected. According to the requirements of Bluetooth Core specification 4.2, the worst-case accuracy of Classic Bluetooth low power oscialltor(LPO) is +/-250ppm in STANDBY and in low power modes such as sniff. For BLE the worst-case SCA is +/-500ppm.

- "151ppm to 250ppm" option is the default value for Bluetooth Dual mode
- **"251ppm to 500ppm" option can be used in BLE only mode when using external 32kHz crystal as** low power clock. This option is provided in case that BLE sleep clock has a lower level of accuracy, or other error sources contribute to the inaccurate timing during sleep.

Available options:

- 251ppm to 500ppm (BTDM_BLE_DEFAULT_SCA_500PPM)
- 151ppm to 250ppm (BTDM_BLE_DEFAULT_SCA_250PPM)

CONFIG_BTDM_BLE_SCAN_DUPL

BLE Scan Duplicate Options

Found in: Component config > Bluetooth > CONFIG_BT_ENABLED > Bluetooth controller

This select enables parameters setting of BLE scan duplicate.

Default value:

- Yes (enabled) if (BTDM_CTRL_MODE_BTDM || BTDM_CTRL_MODE_BLE_ONLY) && *CONFIG_BT_ENABLED*

CONFIG_BTDM_SCAN_DUPL_TYPE

Scan Duplicate Type

Found in: Component config > Bluetooth > CONFIG_BT_ENABLED > Bluetooth controller > CONFIG_BTDM_BLE_SCAN_DUPL

Scan duplicate have three ways. one is "Scan Duplicate By Device Address", This way is to use advertiser address filtering. The adv packet of the same address is only allowed to be reported once. Another way is "Scan Duplicate By Device Address And Advertising Data". This way is to use advertising data and device address filtering. All different adv packets with the same address are allowed to be reported. The last way is "Scan Duplicate By Advertising Data". This way is to use advertising data filtering. All same advertising data only allow to be reported once even though they are from different devices.

Available options:

- Scan Duplicate By Device Address (BTDM_SCAN_DUPL_TYPE_DEVICE)
  This way is to use advertiser address filtering. The adv packet of the same address is only allowed to be reported once
- Scan Duplicate By Advertising Data (BTDM_SCAN_DUPL_TYPE_DATA)
  This way is to use advertising data filtering. All same advertising data only allow to be reported once even though they are from different devices.
- Scan Duplicate By Device Address And Advertising Data (BTDM_SCAN_DUPL_TYPE_DATA_DEVICE)
  This way is to use advertising data and device address filtering. All different adv packets with the same address are allowed to be reported.

CONFIG_BTDM_SCAN_DUPL_CACHE_SIZE

Maximum number of devices in scan duplicate filter

Found in: Component config > Bluetooth > CONFIG_BT_ENABLED > Bluetooth controller > CONFIG_BTDM_BLE_SCAN_DUPL

Maximum number of devices which can be recorded in scan duplicate filter. When the maximum amount of device in the filter is reached, the cache will be refreshed.

Range:

- from 10 to 1000 if *CONFIG_BTDM_BLE_SCAN_DUPL* && *CONFIG_BT_ENABLED*

Default value:

- 100 if *CONFIG_BTDM_BLE_SCAN_DUPL* && *CONFIG_BT_ENABLED*

CONFIG_BTDM_BLE_MESH_SCAN_DUPL_EN

Special duplicate scan mechanism for BLE Mesh scan

Found in: Component config > Bluetooth > CONFIG_BT_ENABLED > Bluetooth controller > CONFIG_BTDM_BLE_SCAN_DUPL

This enables the BLE scan duplicate for special BLE Mesh scan.

Default value:

- No (disabled) if *CONFIG_BTDM_BLE_SCAN_DUPL* && *CONFIG_BT_ENABLED*

CONFIG_BTDM_MESH_DUPL_SCAN_CACHE_SIZE

Maximum number of Mesh adv packets in scan duplicate filter

Found in: Component config > Bluetooth > CONFIG_BT_ENABLED > Bluetooth controller > CONFIG_BTDM_BLE_SCAN_DUPL > CONFIG_BTDM_BLE_MESH_SCAN_DUPL_EN

Maximum number of adv packets which can be recorded in duplicate scan cache for BLE Mesh. When the maximum amount of device in the filter is reached, the cache will be refreshed.

Range:

- from 10 to 1000 if *CONFIG_BTDM_BLE_MESH_SCAN_DUPL_EN* && *CONFIG_BT_ENABLED*

Default value:

- 100 if *CONFIG_BTDM_BLE_MESH_SCAN_DUPL_EN* && *CONFIG_BT_ENABLED*

CONFIG_BTDM_CTRL_FULL_SCAN_SUPPORTED

BLE full scan feature supported

Found in: Component config > Bluetooth > CONFIG_BT_ENABLED > Bluetooth controller

The full scan function is mainly used to provide BLE scan performance. This is required for scenes with high scan performance requirements, such as BLE Mesh scenes.

Default value:

- Yes (enabled) if (BTDM_CTRL_MODE_BLE_ONLY || BTDM_CTRL_MODE_BTDM) && *CONFIG_BT_ENABLED*

CONFIG_BTDM_BLE_ADV_REPORT_FLOW_CTRL_SUPP

BLE adv report flow control supported

Found in: Component config > Bluetooth > CONFIG_BT_ENABLED > Bluetooth controller

The function is mainly used to enable flow control for advertising reports. When it is enabled, advertising reports will be discarded by the controller if the number of unprocessed advertising reports exceeds the size of BLE adv report flow control.

Default value:

- Yes (enabled) if (BTDM_CTRL_MODE_BTDM || BTDM_CTRL_MODE_BLE_ONLY) && *CONFIG_BT_ENABLED*

CONFIG_BTDM_BLE_ADV_REPORT_FLOW_CTRL_NUM

BLE adv report flow control number

Found in: Component config > Bluetooth > CONFIG_BT_ENABLED > Bluetooth controller > CONFIG_BTDM_BLE_ADV_REPORT_FLOW_CTRL_SUPP

The number of unprocessed advertising report that Bluedroid can save.If you set *BTDM_BLE_ADV_REPORT_FLOW_CTRL_NUM* to a small value, this may cause adv packets lost. If you set *BTDM_BLE_ADV_REPORT_FLOW_CTRL_NUM* to a large value, Bluedroid may cache a lot of adv packets and this may cause system memory run out. For example, if you set it to 50, the maximum memory consumed by host is 35 * 50 bytes. Please set *BTDM_BLE_ADV_REPORT_FLOW_CTRL_NUM* according to your system free memory and handle adv packets as fast as possible, otherwise it will cause adv packets lost.

Range:

- from 50 to 1000 if *CONFIG_BTDM_BLE_ADV_REPORT_FLOW_CTRL_SUPP* && *CONFIG_BT_ENABLED*

Default value:

- 100 if *CONFIG_BTDM_BLE_ADV_REPORT_FLOW_CTRL_SUPP* && *CONFIG_BT_ENABLED*

CONFIG_BTDM_BLE_ADV_REPORT_DISCARD_THRSHOLD

BLE adv lost event threshold value

Found in: Component config > Bluetooth > CONFIG_BT_ENABLED > Bluetooth controller > CONFIG_BTDM_BLE_ADV_REPORT_FLOW_CTRL_SUPP

When adv report flow control is enabled, The ADV lost event will be generated when the number of ADV packets lost in the controller reaches this threshold. It is better to set a larger value. If you set *BTDM_BLE_ADV_REPORT_DISCARD_THRSHOLD* to a small value or printf every adv lost event, it may cause adv packets lost more.

Range:

- from 1 to 1000 if *CONFIG_BTDM_BLE_ADV_REPORT_FLOW_CTRL_SUPP* && *CONFIG_BT_ENABLED*

Default value:

- 20 if *CONFIG_BTDM_BLE_ADV_REPORT_FLOW_CTRL_SUPP* && *CONFIG_BT_ENABLED*

CONFIG_BTDM_CTRL_HLI

High level interrupt

Found in: Component config > Bluetooth > CONFIG_BT_ENABLED > Bluetooth controller

Using Level 4 interrupt for Bluetooth.

Default value:

- Yes (enabled) if *CONFIG_BT_ENABLED* && *CONFIG_BT_ENABLED*

CONFIG_BT_HOST

Bluetooth Host

Found in: Component config > Bluetooth > CONFIG_BT_ENABLED

This helps to choose Bluetooth host stack

Available options:

- Bluedroid - Dual-mode (BT_BLUEDROID_ENABLED)
  This option is recommended for classic Bluetooth or for dual-mode usecases
- NimBLE - BLE only (BT_NIMBLE_ENABLED)
  This option is recommended for BLE only usecases to save on memory
- Controller Only (BT_CONTROLLER_ONLY)
  This option is recommended when you want to communicate directly with the controller (without any host) or when you are using any other host stack not supported by Espressif (not mentioned here).

Bluedroid Options

Contains:

- *CONFIG_BT_BLE_HOST_QUEUE_CONG_CHECK*
- *CONFIG_BT_BLUEDROID_MEM_DEBUG*
- *CONFIG_BT_BTU_TASK_STACK_SIZE*
- *CONFIG_BT_BTC_TASK_STACK_SIZE*
- *CONFIG_BT_BLE_ENABLED*
- *BT DEBUG LOG LEVEL*
- *CONFIG_BT_ACL_CONNECTIONS*
- *CONFIG_BT_ALLOCATION_FROM_SPIRAM_FIRST*
- *CONFIG_BT_CLASSIC_ENABLED*
- *CONFIG_BT_HID_ENABLED*
- *CONFIG_BT_STACK_NO_LOG*
- *CONFIG_BT_MULTI_CONNECTION_ENBALE*
- *CONFIG_BT_MAX_DEVICE_NAME_LEN*
- *CONFIG_BT_BLE_ACT_SCAN_REP_ADV_SCAN*
- *CONFIG_BT_SSP_ENABLED*
- *CONFIG_BT_BLUEDROID_PINNED_TO_CORE_CHOICE*
- *CONFIG_BT_BLE_ESTAB_LINK_CONN_TOUT*
- *CONFIG_BT_BLE_RPA_SUPPORTED*
- *CONFIG_BT_BLE_DYNAMIC_ENV_MEMORY*
- *CONFIG_BT_HFP_WBS_ENABLE*

CONFIG_BT_BTC_TASK_STACK_SIZE

Bluetooth event (callback to application) task stack size

Found in: Component config > Bluetooth > Bluedroid Options

This select btc task stack size

Default value:

- 3072 if BT_BLUEDROID_ENABLED && BT_BLUEDROID_ENABLED

CONFIG_BT_BLUEDROID_PINNED_TO_CORE_CHOICE

The cpu core which Bluedroid run

Found in: Component config > Bluetooth > Bluedroid Options

Which the cpu core to run Bluedroid. Can choose core0 and core1. Can not specify no-affinity.

Available options:

- Core 0 (PRO CPU) (BT_BLUEDROID_PINNED_TO_CORE_0)
- Core 1 (APP CPU) (BT_BLUEDROID_PINNED_TO_CORE_1)

CONFIG_BT_BTU_TASK_STACK_SIZE

Bluetooth Bluedroid Host Stack task stack size

Found in: Component config > Bluetooth > Bluedroid Options

This select btu task stack size

Default value:

- 4096 if BT_BLUEDROID_ENABLED && BT_BLUEDROID_ENABLED

CONFIG_BT_BLUEDROID_MEM_DEBUG

Bluedroid memory debug

Found in: Component config > Bluetooth > Bluedroid Options

Bluedroid memory debug

Default value:

- No (disabled) if BT_BLUEDROID_ENABLED && BT_BLUEDROID_ENABLED

CONFIG_BT_CLASSIC_ENABLED

Classic Bluetooth

Found in: Component config > Bluetooth > Bluedroid Options

For now this option needs "SMP_ENABLE" to be set to yes

Default value:

- No (disabled) if BT_BLUEDROID_ENABLED && BT_BLUEDROID_ENABLED

CONFIG_BT_A2DP_ENABLE

A2DP

Found in: Component config > Bluetooth > Bluedroid Options > CONFIG_BT_CLASSIC_ENABLED

Advanced Audio Distrubution Profile

Default value:

- No (disabled) if *CONFIG_BT_CLASSIC_ENABLED* && BT_BLUEDROID_ENABLED

CONFIG_BT_SPP_ENABLED

SPP

Found in: Component config > Bluetooth > Bluedroid Options > CONFIG_BT_CLASSIC_ENABLED

This enables the Serial Port Profile

Default value:

- No (disabled) if *CONFIG_BT_CLASSIC_ENABLED* && BT_BLUEDROID_ENABLED

CONFIG_BT_HFP_ENABLE

Hands Free/Handset Profile

Found in: Component config > Bluetooth > Bluedroid Options > CONFIG_BT_CLASSIC_ENABLED

Default value:

- No (disabled) if *CONFIG_BT_CLASSIC_ENABLED* && BT_BLUEDROID_ENABLED

CONFIG_BT_HFP_ROLE

Hands-free Profile Role configuration

Found in: Component config > Bluetooth > Bluedroid Options > CONFIG_BT_CLASSIC_ENABLED > CONFIG_BT_HFP_ENABLE

Available options:

- Hands Free Unit (BT_HFP_CLIENT_ENABLE)
- Audio Gateway (BT_HFP_AG_ENABLE)

CONFIG_BT_HFP_AUDIO_DATA_PATH

audio(SCO) data path

Found in: Component config > Bluetooth > Bluedroid Options > CONFIG_BT_CLASSIC_ENABLED > CONFIG_BT_HFP_ENABLE

SCO data path, i.e. HCI or PCM. This option is set using API "esp_bredr_sco_datapath_set" in Bluetooth host. Default SCO data path can also be set in Bluetooth Controller.

Available options:

- PCM (BT_HFP_AUDIO_DATA_PATH_PCM)
- HCI (BT_HFP_AUDIO_DATA_PATH_HCI)

CONFIG_BT_HFP_WBS_ENABLE

Wide Band Speech

Found in: Component config > Bluetooth > Bluedroid Options

This enables Wide Band Speech. Should disable it when SCO data path is PCM. Otherwise there will be no data transmited via GPIOs.

Default value:

- Yes (enabled) if BT_HFP_AUDIO_DATA_PATH_HCI && BT_BLUEDROID_ENABLED

CONFIG_BT_HID_ENABLED

Classic BT HID

Found in: Component config > Bluetooth > Bluedroid Options

This enables the BT HID Host

Default value:

- No (disabled) if *CONFIG_BT_CLASSIC_ENABLED* && BT_BLUEDROID_ENABLED

CONFIG_BT_HID_ROLE

Profile Role configuration

Found in: Component config > Bluetooth > Bluedroid Options > CONFIG_BT_HID_ENABLED

Available options:

- Classic BT HID Host (BT_HID_HOST_ENABLED)
  This enables the BT HID Host
- Classic BT HID Device (BT_HID_DEVICE_ENABLED)
  This enables the BT HID Device

CONFIG_BT_SSP_ENABLED

Secure Simple Pairing

Found in: Component config > Bluetooth > Bluedroid Options

This enables the Secure Simple Pairing. If disable this option, Bluedroid will only support Legacy Pairing

Default value:

- Yes (enabled) if *CONFIG_BT_CLASSIC_ENABLED* && BT_BLUEDROID_ENABLED

CONFIG_BT_BLE_ENABLED

Bluetooth Low Energy

Found in: Component config > Bluetooth > Bluedroid Options

This enables Bluetooth Low Energy

Default value:

- Yes (enabled) if BT_BLUEDROID_ENABLED && BT_BLUEDROID_ENABLED

CONFIG_BT_GATTS_ENABLE

Include GATT server module(GATTS)

Found in: Component config > Bluetooth > Bluedroid Options > CONFIG_BT_BLE_ENABLED

This option can be disabled when the app work only on gatt client mode

Default value:

- Yes (enabled) if *CONFIG_BT_BLE_ENABLED* && BT_BLUEDROID_ENABLED

CONFIG_BT_GATTS_PPCP_CHAR_GAP

Enable Peripheral Preferred Connection Parameters characteristic in GAP service

Found in: Component config > Bluetooth > Bluedroid Options > CONFIG_BT_BLE_ENABLED > CONFIG_BT_GATTS_ENABLE

This enables "Peripheral Preferred Connection Parameters" characteristic (UUID: 0x2A04) in GAP service that has connection parameters like min/max connection interval, slave latency and supervision timeout multiplier

Default value:

- No (disabled) if *CONFIG_BT_GATTS_ENABLE* && BT_BLUEDROID_ENABLED

CONFIG_BT_BLE_BLUFI_ENABLE

Include blufi function

Found in: Component config > Bluetooth > Bluedroid Options > CONFIG_BT_BLE_ENABLED > CONFIG_BT_GATTS_ENABLE

This option can be close when the app does not require blufi function.

Default value:

- No (disabled) if *CONFIG_BT_GATTS_ENABLE* && BT_BLUEDROID_ENABLED

CONFIG_BT_GATT_MAX_SR_PROFILES

Max GATT Server Profiles

Found in: Component config > Bluetooth > Bluedroid Options > CONFIG_BT_BLE_ENABLED > CONFIG_BT_GATTS_ENABLE

Maximum GATT Server Profiles Count

Range:

- from 1 to 32 if *CONFIG_BT_GATTS_ENABLE* && BT_BLUEDROID_ENABLED && BT_BLUEDROID_ENABLED

Default value:

- 8 if *CONFIG_BT_GATTS_ENABLE* && BT_BLUEDROID_ENABLED && BT_BLUEDROID_ENABLED

CONFIG_BT_GATTS_SEND_SERVICE_CHANGE_MODE

GATTS Service Change Mode

Found in: Component config > Bluetooth > Bluedroid Options > CONFIG_BT_BLE_ENABLED > CONFIG_BT_GATTS_ENABLE

Service change indication mode for GATT Server.

Available options:

- GATTS manually send service change indication (BT_GATTS_SEND_SERVICE_CHANGE_MANUAL)
  Manually send service change indication through API esp_ble_gatts_send_service_change_indication()
- GATTS automatically send service change indication (BT_GATTS_SEND_SERVICE_CHANGE_AUTO)
  Let Bluedroid handle the service change indication internally

CONFIG_BT_GATTC_ENABLE

Include GATT client module(GATTC)

Found in: Component config > Bluetooth > Bluedroid Options > CONFIG_BT_BLE_ENABLED

This option can be close when the app work only on gatt server mode

Default value:

- Yes (enabled) if *CONFIG_BT_BLE_ENABLED* && BT_BLUEDROID_ENABLED

CONFIG_BT_GATTC_CACHE_NVS_FLASH

Save gattc cache data to nvs flash

Found in: Component config > Bluetooth > Bluedroid Options > CONFIG_BT_BLE_ENABLED > CONFIG_BT_GATTC_ENABLE

This select can save gattc cache data to nvs flash

Default value:

- No (disabled) if *CONFIG_BT_GATTC_ENABLE* && BT_BLUEDROID_ENABLED

CONFIG_BT_GATTC_CONNECT_RETRY_COUNT

The number of attempts to reconnect if the connection establishment failed

Found in: Component config > Bluetooth > Bluedroid Options > CONFIG_BT_BLE_ENABLED > CONFIG_BT_GATTC_ENABLE

The number of attempts to reconnect if the connection establishment failed

Range:

- from 0 to 7 if *CONFIG_BT_GATTC_ENABLE* && BT_BLUEDROID_ENABLED

Default value:

- 3 if *CONFIG_BT_GATTC_ENABLE* && BT_BLUEDROID_ENABLED

CONFIG_BT_BLE_SMP_ENABLE

Include BLE security module(SMP)

Found in: Component config > Bluetooth > Bluedroid Options > CONFIG_BT_BLE_ENABLED

This option can be close when the app not used the ble security connect.

Default value:

- Yes (enabled) if *CONFIG_BT_BLE_ENABLED* && BT_BLUEDROID_ENABLED

CONFIG_BT_SMP_SLAVE_CON_PARAMS_UPD_ENABLE

Slave enable connection parameters update during pairing

Found in: Component config > Bluetooth > Bluedroid Options > CONFIG_BT_BLE_ENABLED > CONFIG_BT_BLE_SMP_ENABLE

In order to reduce the pairing time, slave actively initiates connection parameters update during pairing.

Default value:

- No (disabled) if *CONFIG_BT_BLE_SMP_ENABLE* && BT_BLUEDROID_ENABLED

CONFIG_BT_STACK_NO_LOG

Disable BT debug logs (minimize bin size)

Found in: Component config > Bluetooth > Bluedroid Options

This select can save the rodata code size

Default value:

- No (disabled) if BT_BLUEDROID_ENABLED && BT_BLUEDROID_ENABLED

BT DEBUG LOG LEVEL

Contains:

- *CONFIG_BT_LOG_A2D_TRACE_LEVEL*
- *CONFIG_BT_LOG_APPL_TRACE_LEVEL*
- *CONFIG_BT_LOG_AVCT_TRACE_LEVEL*
- *CONFIG_BT_LOG_AVDT_TRACE_LEVEL*
- *CONFIG_BT_LOG_AVRC_TRACE_LEVEL*
- *CONFIG_BT_LOG_BLUFI_TRACE_LEVEL*
- *CONFIG_BT_LOG_BNEP_TRACE_LEVEL*
- *CONFIG_BT_LOG_BTC_TRACE_LEVEL*
- *CONFIG_BT_LOG_BTIF_TRACE_LEVEL*
- *CONFIG_BT_LOG_BTM_TRACE_LEVEL*

- *CONFIG_BT_LOG_GAP_TRACE_LEVEL*
- *CONFIG_BT_LOG_GATT_TRACE_LEVEL*
- *CONFIG_BT_LOG_HCI_TRACE_LEVEL*
- *CONFIG_BT_LOG_HID_TRACE_LEVEL*
- *CONFIG_BT_LOG_L2CAP_TRACE_LEVEL*
- *CONFIG_BT_LOG_MCA_TRACE_LEVEL*
- *CONFIG_BT_LOG_OSI_TRACE_LEVEL*
- *CONFIG_BT_LOG_PAN_TRACE_LEVEL*
- *CONFIG_BT_LOG_RFCOMM_TRACE_LEVEL*
- *CONFIG_BT_LOG_SDP_TRACE_LEVEL*
- *CONFIG_BT_LOG_SMP_TRACE_LEVEL*

CONFIG_BT_LOG_HCI_TRACE_LEVEL

HCI layer

Found in: Component config > Bluetooth > Bluedroid Options > BT DEBUG LOG LEVEL

Define BT trace level for HCI layer

Available options:

- NONE (BT_LOG_HCI_TRACE_LEVEL_NONE)
- ERROR (BT_LOG_HCI_TRACE_LEVEL_ERROR)
- WARNING (BT_LOG_HCI_TRACE_LEVEL_WARNING)
- API (BT_LOG_HCI_TRACE_LEVEL_API)
- EVENT (BT_LOG_HCI_TRACE_LEVEL_EVENT)
- DEBUG (BT_LOG_HCI_TRACE_LEVEL_DEBUG)
- VERBOSE (BT_LOG_HCI_TRACE_LEVEL_VERBOSE)

CONFIG_BT_LOG_BTM_TRACE_LEVEL

BTM layer

Found in: Component config > Bluetooth > Bluedroid Options > BT DEBUG LOG LEVEL

Define BT trace level for BTM layer

Available options:

- NONE (BT_LOG_BTM_TRACE_LEVEL_NONE)
- ERROR (BT_LOG_BTM_TRACE_LEVEL_ERROR)
- WARNING (BT_LOG_BTM_TRACE_LEVEL_WARNING)
- API (BT_LOG_BTM_TRACE_LEVEL_API)
- EVENT (BT_LOG_BTM_TRACE_LEVEL_EVENT)
- DEBUG (BT_LOG_BTM_TRACE_LEVEL_DEBUG)
- VERBOSE (BT_LOG_BTM_TRACE_LEVEL_VERBOSE)

CONFIG_BT_LOG_L2CAP_TRACE_LEVEL

L2CAP layer

Found in: Component config > Bluetooth > Bluedroid Options > BT DEBUG LOG LEVEL

Define BT trace level for L2CAP layer

Available options:

- NONE (BT_LOG_L2CAP_TRACE_LEVEL_NONE)
- ERROR (BT_LOG_L2CAP_TRACE_LEVEL_ERROR)
- WARNING (BT_LOG_L2CAP_TRACE_LEVEL_WARNING)
- API (BT_LOG_L2CAP_TRACE_LEVEL_API)
- EVENT (BT_LOG_L2CAP_TRACE_LEVEL_EVENT)
- DEBUG (BT_LOG_L2CAP_TRACE_LEVEL_DEBUG)
- VERBOSE (BT_LOG_L2CAP_TRACE_LEVEL_VERBOSE)

CONFIG_BT_LOG_RFCOMM_TRACE_LEVEL

RFCOMM layer

Found in: Component config > Bluetooth > Bluedroid Options > BT DEBUG LOG LEVEL

Define BT trace level for RFCOMM layer

Available options:

- NONE (BT_LOG_RFCOMM_TRACE_LEVEL_NONE)
- ERROR (BT_LOG_RFCOMM_TRACE_LEVEL_ERROR)
- WARNING (BT_LOG_RFCOMM_TRACE_LEVEL_WARNING)
- API (BT_LOG_RFCOMM_TRACE_LEVEL_API)
- EVENT (BT_LOG_RFCOMM_TRACE_LEVEL_EVENT)
- DEBUG (BT_LOG_RFCOMM_TRACE_LEVEL_DEBUG)
- VERBOSE (BT_LOG_RFCOMM_TRACE_LEVEL_VERBOSE)

CONFIG_BT_LOG_SDP_TRACE_LEVEL

SDP layer

Found in: Component config > Bluetooth > Bluedroid Options > BT DEBUG LOG LEVEL

Define BT trace level for SDP layer

Available options:

- NONE (BT_LOG_SDP_TRACE_LEVEL_NONE)
- ERROR (BT_LOG_SDP_TRACE_LEVEL_ERROR)
- WARNING (BT_LOG_SDP_TRACE_LEVEL_WARNING)
- API (BT_LOG_SDP_TRACE_LEVEL_API)
- EVENT (BT_LOG_SDP_TRACE_LEVEL_EVENT)
- DEBUG (BT_LOG_SDP_TRACE_LEVEL_DEBUG)
- VERBOSE (BT_LOG_SDP_TRACE_LEVEL_VERBOSE)

CONFIG_BT_LOG_GAP_TRACE_LEVEL

GAP layer

Found in: Component config > Bluetooth > Bluedroid Options > BT DEBUG LOG LEVEL

Define BT trace level for GAP layer

Available options:

- NONE (BT_LOG_GAP_TRACE_LEVEL_NONE)
- ERROR (BT_LOG_GAP_TRACE_LEVEL_ERROR)
- WARNING (BT_LOG_GAP_TRACE_LEVEL_WARNING)
- API (BT_LOG_GAP_TRACE_LEVEL_API)
- EVENT (BT_LOG_GAP_TRACE_LEVEL_EVENT)
- DEBUG (BT_LOG_GAP_TRACE_LEVEL_DEBUG)
- VERBOSE (BT_LOG_GAP_TRACE_LEVEL_VERBOSE)

CONFIG_BT_LOG_BNEP_TRACE_LEVEL

BNEP layer

Found in: Component config > Bluetooth > Bluedroid Options > BT DEBUG LOG LEVEL

Define BT trace level for BNEP layer

Available options:

- NONE (BT_LOG_BNEP_TRACE_LEVEL_NONE)
- ERROR (BT_LOG_BNEP_TRACE_LEVEL_ERROR)
- WARNING (BT_LOG_BNEP_TRACE_LEVEL_WARNING)
- API (BT_LOG_BNEP_TRACE_LEVEL_API)

- EVENT (BT_LOG_BNEP_TRACE_LEVEL_EVENT)
- DEBUG (BT_LOG_BNEP_TRACE_LEVEL_DEBUG)
- VERBOSE (BT_LOG_BNEP_TRACE_LEVEL_VERBOSE)

CONFIG_BT_LOG_PAN_TRACE_LEVEL

PAN layer

Found in: Component config > Bluetooth > Bluedroid Options > BT DEBUG LOG LEVEL

Define BT trace level for PAN layer

Available options:

- NONE (BT_LOG_PAN_TRACE_LEVEL_NONE)
- ERROR (BT_LOG_PAN_TRACE_LEVEL_ERROR)
- WARNING (BT_LOG_PAN_TRACE_LEVEL_WARNING)
- API (BT_LOG_PAN_TRACE_LEVEL_API)
- EVENT (BT_LOG_PAN_TRACE_LEVEL_EVENT)
- DEBUG (BT_LOG_PAN_TRACE_LEVEL_DEBUG)
- VERBOSE (BT_LOG_PAN_TRACE_LEVEL_VERBOSE)

CONFIG_BT_LOG_A2D_TRACE_LEVEL

A2D layer

Found in: Component config > Bluetooth > Bluedroid Options > BT DEBUG LOG LEVEL

Define BT trace level for A2D layer

Available options:

- NONE (BT_LOG_A2D_TRACE_LEVEL_NONE)
- ERROR (BT_LOG_A2D_TRACE_LEVEL_ERROR)
- WARNING (BT_LOG_A2D_TRACE_LEVEL_WARNING)
- API (BT_LOG_A2D_TRACE_LEVEL_API)
- EVENT (BT_LOG_A2D_TRACE_LEVEL_EVENT)
- DEBUG (BT_LOG_A2D_TRACE_LEVEL_DEBUG)
- VERBOSE (BT_LOG_A2D_TRACE_LEVEL_VERBOSE)

CONFIG_BT_LOG_AVDT_TRACE_LEVEL

AVDT layer

Found in: Component config > Bluetooth > Bluedroid Options > BT DEBUG LOG LEVEL

Define BT trace level for AVDT layer

Available options:

- NONE (BT_LOG_AVDT_TRACE_LEVEL_NONE)
- ERROR (BT_LOG_AVDT_TRACE_LEVEL_ERROR)
- WARNING (BT_LOG_AVDT_TRACE_LEVEL_WARNING)
- API (BT_LOG_AVDT_TRACE_LEVEL_API)
- EVENT (BT_LOG_AVDT_TRACE_LEVEL_EVENT)
- DEBUG (BT_LOG_AVDT_TRACE_LEVEL_DEBUG)
- VERBOSE (BT_LOG_AVDT_TRACE_LEVEL_VERBOSE)

CONFIG_BT_LOG_AVCT_TRACE_LEVEL

AVCT layer

Found in: Component config > Bluetooth > Bluedroid Options > BT DEBUG LOG LEVEL

Define BT trace level for AVCT layer

Available options:

- NONE (BT_LOG_AVCT_TRACE_LEVEL_NONE)
- ERROR (BT_LOG_AVCT_TRACE_LEVEL_ERROR)
- WARNING (BT_LOG_AVCT_TRACE_LEVEL_WARNING)
- API (BT_LOG_AVCT_TRACE_LEVEL_API)
- EVENT (BT_LOG_AVCT_TRACE_LEVEL_EVENT)
- DEBUG (BT_LOG_AVCT_TRACE_LEVEL_DEBUG)
- VERBOSE (BT_LOG_AVCT_TRACE_LEVEL_VERBOSE)

CONFIG_BT_LOG_AVRC_TRACE_LEVEL

AVRC layer

Found in: Component config > Bluetooth > Bluedroid Options > BT DEBUG LOG LEVEL

Define BT trace level for AVRC layer

Available options:

- NONE (BT_LOG_AVRC_TRACE_LEVEL_NONE)
- ERROR (BT_LOG_AVRC_TRACE_LEVEL_ERROR)
- WARNING (BT_LOG_AVRC_TRACE_LEVEL_WARNING)
- API (BT_LOG_AVRC_TRACE_LEVEL_API)
- EVENT (BT_LOG_AVRC_TRACE_LEVEL_EVENT)
- DEBUG (BT_LOG_AVRC_TRACE_LEVEL_DEBUG)
- VERBOSE (BT_LOG_AVRC_TRACE_LEVEL_VERBOSE)

CONFIG_BT_LOG_MCA_TRACE_LEVEL

MCA layer

Found in: Component config > Bluetooth > Bluedroid Options > BT DEBUG LOG LEVEL

Define BT trace level for MCA layer

Available options:

- NONE (BT_LOG_MCA_TRACE_LEVEL_NONE)
- ERROR (BT_LOG_MCA_TRACE_LEVEL_ERROR)
- WARNING (BT_LOG_MCA_TRACE_LEVEL_WARNING)
- API (BT_LOG_MCA_TRACE_LEVEL_API)
- EVENT (BT_LOG_MCA_TRACE_LEVEL_EVENT)
- DEBUG (BT_LOG_MCA_TRACE_LEVEL_DEBUG)
- VERBOSE (BT_LOG_MCA_TRACE_LEVEL_VERBOSE)

CONFIG_BT_LOG_HID_TRACE_LEVEL

HID layer

Found in: Component config > Bluetooth > Bluedroid Options > BT DEBUG LOG LEVEL

Define BT trace level for HID layer

Available options:

- NONE (BT_LOG_HID_TRACE_LEVEL_NONE)
- ERROR (BT_LOG_HID_TRACE_LEVEL_ERROR)
- WARNING (BT_LOG_HID_TRACE_LEVEL_WARNING)
- API (BT_LOG_HID_TRACE_LEVEL_API)
- EVENT (BT_LOG_HID_TRACE_LEVEL_EVENT)
- DEBUG (BT_LOG_HID_TRACE_LEVEL_DEBUG)
- VERBOSE (BT_LOG_HID_TRACE_LEVEL_VERBOSE)

CONFIG_BT_LOG_APPL_TRACE_LEVEL

APPL layer

Found in: Component config > Bluetooth > Bluedroid Options > BT DEBUG LOG LEVEL

Define BT trace level for APPL layer

Available options:

- NONE (BT_LOG_APPL_TRACE_LEVEL_NONE)
- ERROR (BT_LOG_APPL_TRACE_LEVEL_ERROR)
- WARNING (BT_LOG_APPL_TRACE_LEVEL_WARNING)
- API (BT_LOG_APPL_TRACE_LEVEL_API)
- EVENT (BT_LOG_APPL_TRACE_LEVEL_EVENT)
- DEBUG (BT_LOG_APPL_TRACE_LEVEL_DEBUG)
- VERBOSE (BT_LOG_APPL_TRACE_LEVEL_VERBOSE)

CONFIG_BT_LOG_GATT_TRACE_LEVEL

GATT layer

Found in: Component config > Bluetooth > Bluedroid Options > BT DEBUG LOG LEVEL

Define BT trace level for GATT layer

Available options:

- NONE (BT_LOG_GATT_TRACE_LEVEL_NONE)
- ERROR (BT_LOG_GATT_TRACE_LEVEL_ERROR)
- WARNING (BT_LOG_GATT_TRACE_LEVEL_WARNING)
- API (BT_LOG_GATT_TRACE_LEVEL_API)
- EVENT (BT_LOG_GATT_TRACE_LEVEL_EVENT)
- DEBUG (BT_LOG_GATT_TRACE_LEVEL_DEBUG)
- VERBOSE (BT_LOG_GATT_TRACE_LEVEL_VERBOSE)

CONFIG_BT_LOG_SMP_TRACE_LEVEL

SMP layer

Found in: Component config > Bluetooth > Bluedroid Options > BT DEBUG LOG LEVEL

Define BT trace level for SMP layer

Available options:

- NONE (BT_LOG_SMP_TRACE_LEVEL_NONE)
- ERROR (BT_LOG_SMP_TRACE_LEVEL_ERROR)
- WARNING (BT_LOG_SMP_TRACE_LEVEL_WARNING)
- API (BT_LOG_SMP_TRACE_LEVEL_API)
- EVENT (BT_LOG_SMP_TRACE_LEVEL_EVENT)
- DEBUG (BT_LOG_SMP_TRACE_LEVEL_DEBUG)
- VERBOSE (BT_LOG_SMP_TRACE_LEVEL_VERBOSE)

CONFIG_BT_LOG_BTIF_TRACE_LEVEL

BTIF layer

Found in: Component config > Bluetooth > Bluedroid Options > BT DEBUG LOG LEVEL

Define BT trace level for BTIF layer

Available options:

- NONE (BT_LOG_BTIF_TRACE_LEVEL_NONE)
- ERROR (BT_LOG_BTIF_TRACE_LEVEL_ERROR)
- WARNING (BT_LOG_BTIF_TRACE_LEVEL_WARNING)
- API (BT_LOG_BTIF_TRACE_LEVEL_API)

- EVENT (BT_LOG_BTIF_TRACE_LEVEL_EVENT)
- DEBUG (BT_LOG_BTIF_TRACE_LEVEL_DEBUG)
- VERBOSE (BT_LOG_BTIF_TRACE_LEVEL_VERBOSE)

CONFIG_BT_LOG_BTC_TRACE_LEVEL

BTC layer

Found in: Component config > Bluetooth > Bluedroid Options > BT DEBUG LOG LEVEL

Define BT trace level for BTC layer

Available options:

- NONE (BT_LOG_BTC_TRACE_LEVEL_NONE)
- ERROR (BT_LOG_BTC_TRACE_LEVEL_ERROR)
- WARNING (BT_LOG_BTC_TRACE_LEVEL_WARNING)
- API (BT_LOG_BTC_TRACE_LEVEL_API)
- EVENT (BT_LOG_BTC_TRACE_LEVEL_EVENT)
- DEBUG (BT_LOG_BTC_TRACE_LEVEL_DEBUG)
- VERBOSE (BT_LOG_BTC_TRACE_LEVEL_VERBOSE)

CONFIG_BT_LOG_OSI_TRACE_LEVEL

OSI layer

Found in: Component config > Bluetooth > Bluedroid Options > BT DEBUG LOG LEVEL

Define BT trace level for OSI layer

Available options:

- NONE (BT_LOG_OSI_TRACE_LEVEL_NONE)
- ERROR (BT_LOG_OSI_TRACE_LEVEL_ERROR)
- WARNING (BT_LOG_OSI_TRACE_LEVEL_WARNING)
- API (BT_LOG_OSI_TRACE_LEVEL_API)
- EVENT (BT_LOG_OSI_TRACE_LEVEL_EVENT)
- DEBUG (BT_LOG_OSI_TRACE_LEVEL_DEBUG)
- VERBOSE (BT_LOG_OSI_TRACE_LEVEL_VERBOSE)

CONFIG_BT_LOG_BLUFI_TRACE_LEVEL

BLUFI layer

Found in: Component config > Bluetooth > Bluedroid Options > BT DEBUG LOG LEVEL

Define BT trace level for BLUFI layer

Available options:

- NONE (BT_LOG_BLUFI_TRACE_LEVEL_NONE)
- ERROR (BT_LOG_BLUFI_TRACE_LEVEL_ERROR)
- WARNING (BT_LOG_BLUFI_TRACE_LEVEL_WARNING)
- API (BT_LOG_BLUFI_TRACE_LEVEL_API)
- EVENT (BT_LOG_BLUFI_TRACE_LEVEL_EVENT)
- DEBUG (BT_LOG_BLUFI_TRACE_LEVEL_DEBUG)
- VERBOSE (BT_LOG_BLUFI_TRACE_LEVEL_VERBOSE)

CONFIG_BT_ACL_CONNECTIONS

BT/BLE MAX ACL CONNECTIONS(1~7)

Found in: Component config > Bluetooth > Bluedroid Options

Maximum BT/BLE connection count

Range:
- from 1 to 7 if BT_BLUEDROID_ENABLED && BT_BLUEDROID_ENABLED

Default value:
- 4 if BT_BLUEDROID_ENABLED && BT_BLUEDROID_ENABLED

CONFIG_BT_MULTI_CONNECTION_ENBALE

Enable BLE multi-conections

Found in: Component config > Bluetooth > Bluedroid Options

Enable this option if there are multiple connections

Default value:
- Yes (enabled) if BT_BLUEDROID_ENABLED && BT_BLUEDROID_ENABLED

CONFIG_BT_ALLOCATION_FROM_SPIRAM_FIRST

BT/BLE will first malloc the memory from the PSRAM

Found in: Component config > Bluetooth > Bluedroid Options

This select can save the internal RAM if there have the PSRAM

Default value:
- No (disabled) if BT_BLUEDROID_ENABLED && BT_BLUEDROID_ENABLED

CONFIG_BT_BLE_DYNAMIC_ENV_MEMORY

Use dynamic memory allocation in BT/BLE stack

Found in: Component config > Bluetooth > Bluedroid Options

This select can make the allocation of memory will become more flexible

Default value:
- No (disabled) if BT_BLUEDROID_ENABLED && BT_BLUEDROID_ENABLED

CONFIG_BT_BLE_HOST_QUEUE_CONG_CHECK

BLE queue congestion check

Found in: Component config > Bluetooth > Bluedroid Options

When scanning and scan duplicate is not enabled, if there are a lot of adv packets around or application layer handling adv packets is slow, it will cause the controller memory to run out. if enabled, adv packets will be lost when host queue is congested.

Default value:
- No (disabled) if BT_BLUEDROID_ENABLED && BT_BLUEDROID_ENABLED

CONFIG_BT_BLE_ACT_SCAN_REP_ADV_SCAN

Report adv data and scan response individually when BLE active scan

Found in: Component config > Bluetooth > Bluedroid Options

Originally, when doing BLE active scan, Bluedroid will not report adv to application layer until receive scan response. This option is used to disable the behavior. When enable this option, Bluedroid will report adv data or scan response to application layer immediately.

Memory reserved at start of DRAM for Bluetooth stack

Default value:

- No (disabled) if BT_BLUEDROID_ENABLED && (BTDM_CTRL_MODE_BTDM || BTDM_CTRL_MODE_BLE_ONLY) && BT_BLUEDROID_ENABLED

CONFIG_BT_BLE_ESTAB_LINK_CONN_TOUT

Timeout of BLE connection establishment

Found in: Component config > Bluetooth > Bluedroid Options

Bluetooth Connection establishment maximum time, if connection time exceeds this value, the connection establishment fails, ESP_GATTC_OPEN_EVT or ESP_GATTS_OPEN_EVT is triggered.

Range:
- from 1 to 60 if BT_BLUEDROID_ENABLED && BT_BLUEDROID_ENABLED

Default value:
- 30 if BT_BLUEDROID_ENABLED && BT_BLUEDROID_ENABLED

CONFIG_BT_MAX_DEVICE_NAME_LEN

length of bluetooth device name

Found in: Component config > Bluetooth > Bluedroid Options

Bluetooth Device name length shall be no larger than 248 octets, If the broadcast data cannot contain the complete device name, then only the shortname will be displayed, the rest parts that can't fit in will be truncated.

Range:
- from 32 to 248 if BT_BLUEDROID_ENABLED && BT_BLUEDROID_ENABLED

Default value:
- 32 if BT_BLUEDROID_ENABLED && BT_BLUEDROID_ENABLED

CONFIG_BT_BLE_RPA_SUPPORTED

Update RPA to Controller

Found in: Component config > Bluetooth > Bluedroid Options

This enables controller RPA list function. For ESP32, ESP32 only support network privacy mode. If this option is enabled, ESP32 will only accept advertising packets from peer devices that contain private address, HW will not receive the advertising packets contain identity address after IRK changed. If this option is disabled, address resolution will be performed in the host, so the functions that require controller to resolve address in the white list cannot be used. This option is disabled by default on ESP32, please enable or disable this option according to your own needs.

For ESP32C3 and esp32s3, devices support network privacy mode and device privacy mode, users can switch the two modes according to their own needs. So this option is enabled by default.

Default value:
- No (disabled) if BT_BLUEDROID_ENABLED && BT_BLUEDROID_ENABLED

NimBLE Options

Contains:

- *CONFIG_BT_NIMBLE_ACL_BUF_COUNT*
- *CONFIG_BT_NIMBLE_ACL_BUF_SIZE*
- *CONFIG_BT_NIMBLE_SVC_GAP_DEVICE_NAME*
- *CONFIG_BT_NIMBLE_HS_STOP_TIMEOUT_MS*
- *CONFIG_BT_NIMBLE_ROLE_BROADCASTER*
- *CONFIG_BT_NIMBLE_ROLE_CENTRAL*
- *CONFIG_BT_NIMBLE_MESH*
- *CONFIG_BT_NIMBLE_ROLE_OBSERVER*
- *CONFIG_BT_NIMBLE_ROLE_PERIPHERAL*

- *CONFIG_BT_NIMBLE_BLUFI_ENABLE*
- *CONFIG_BT_NIMBLE_ENABLE_CONN_REATTEMPT*
- *CONFIG_BT_NIMBLE_USE_ESP_TIMER*
- *CONFIG_BT_NIMBLE_DEBUG*
- *CONFIG_BT_NIMBLE_HS_FLOW_CTRL*
- *CONFIG_BT_NIMBLE_SVC_GAP_APPEARANCE*
- *CONFIG_BT_NIMBLE_HCI_EVT_BUF_SIZE*
- *CONFIG_BT_NIMBLE_HCI_EVT_HI_BUF_COUNT*
- *CONFIG_BT_NIMBLE_HCI_EVT_LO_BUF_COUNT*
- *CONFIG_BT_NIMBLE_GAP_DEVICE_NAME_MAX_LEN*
- *CONFIG_BT_NIMBLE_MAX_BONDS*
- *CONFIG_BT_NIMBLE_MAX_CCCDS*
- *CONFIG_BT_NIMBLE_MAX_CONNECTIONS*
- *CONFIG_BT_NIMBLE_L2CAP_COC_MAX_NUM*
- *CONFIG_BT_NIMBLE_MEM_ALLOC_MODE*
- *CONFIG_BT_NIMBLE_MSYS1_BLOCK_COUNT*
- *CONFIG_BT_NIMBLE_LOG_LEVEL*
- *CONFIG_BT_NIMBLE_TASK_STACK_SIZE*
- *CONFIG_BT_NIMBLE_CRYPTO_STACK_MBEDTLS*
- *CONFIG_BT_NIMBLE_NVS_PERSIST*
- *CONFIG_BT_NIMBLE_ATT_PREFERRED_MTU*
- *CONFIG_BT_NIMBLE_RPA_TIMEOUT*
- *CONFIG_BT_NIMBLE_SM_LEGACY*
- *CONFIG_BT_NIMBLE_SM_SC*
- *CONFIG_BT_NIMBLE_PINNED_TO_CORE_CHOICE*
- *CONFIG_BT_NIMBLE_SM_SC_DEBUG_KEYS*

CONFIG_BT_NIMBLE_MEM_ALLOC_MODE

Memory allocation strategy

Found in: Component config > Bluetooth > NimBLE Options

Allocation strategy for NimBLE host stack, essentially provides ability to allocate all required dynamic allocations from,

- Internal DRAM memory only
- External SPIRAM memory only
- Either internal or external memory based on default malloc() behavior in ESP-IDF
- Internal IRAM memory wherever applicable else internal DRAM

Available options:

- Internal memory (BT_NIMBLE_MEM_ALLOC_MODE_INTERNAL)
- External SPIRAM (BT_NIMBLE_MEM_ALLOC_MODE_EXTERNAL)
- Default alloc mode (BT_NIMBLE_MEM_ALLOC_MODE_DEFAULT)
- Internal IRAM (BT_NIMBLE_MEM_ALLOC_MODE_IRAM_8BIT)
  Allows to use IRAM memory region as 8bit accessible region.
  Every unaligned (8bit or 16bit) access will result in an exception and incur penalty of certain clock cycles per unaligned read/write.

CONFIG_BT_NIMBLE_LOG_LEVEL

NimBLE Host log verbosity

Found in: Component config > Bluetooth > NimBLE Options

Select NimBLE log level. Please make a note that the selected NimBLE log verbosity can not exceed the level set in "Component config –> Log output –> Default log verbosity".

Available options:

- No logs (BT_NIMBLE_LOG_LEVEL_NONE)

- Error logs (BT_NIMBLE_LOG_LEVEL_ERROR)
- Warning logs (BT_NIMBLE_LOG_LEVEL_WARNING)
- Info logs (BT_NIMBLE_LOG_LEVEL_INFO)
- Debug logs (BT_NIMBLE_LOG_LEVEL_DEBUG)

CONFIG_BT_NIMBLE_MAX_CONNECTIONS

Maximum number of concurrent connections

Found in: Component config > Bluetooth > NimBLE Options

Defines maximum number of concurrent BLE connections. For ESP32, user is expected to configure BTDM_CTRL_BLE_MAX_CONN from controller menu along with this option. Similarly for ESP32-C3 or ESP32-S3, user is expected to configure BT_CTRL_BLE_MAX_ACT from controller menu.

Range:
- from 1 to 9 if BT_NIMBLE_ENABLED && BT_NIMBLE_ENABLED

Default value:
- 3 if BT_NIMBLE_ENABLED && BT_NIMBLE_ENABLED

CONFIG_BT_NIMBLE_MAX_BONDS

Maximum number of bonds to save across reboots

Found in: Component config > Bluetooth > NimBLE Options

Defines maximum number of bonds to save for peer security and our security

Default value:
- 3 if BT_NIMBLE_ENABLED && BT_NIMBLE_ENABLED

CONFIG_BT_NIMBLE_MAX_CCCDS

Maximum number of CCC descriptors to save across reboots

Found in: Component config > Bluetooth > NimBLE Options

Defines maximum number of CCC descriptors to save

Default value:
- 8 if BT_NIMBLE_ENABLED && BT_NIMBLE_ENABLED

CONFIG_BT_NIMBLE_L2CAP_COC_MAX_NUM

Maximum number of connection oriented channels

Found in: Component config > Bluetooth > NimBLE Options

Defines maximum number of BLE Connection Oriented Channels. When set to (0), BLE COC is not compiled in

Range:
- from 0 to 9 if BT_NIMBLE_ENABLED && BT_NIMBLE_ENABLED

Default value:
- 0 if BT_NIMBLE_ENABLED && BT_NIMBLE_ENABLED

CONFIG_BT_NIMBLE_PINNED_TO_CORE_CHOICE

The CPU core on which NimBLE host will run

Found in: Component config > Bluetooth > NimBLE Options

The CPU core on which NimBLE host will run. You can choose Core 0 or Core 1. Cannot specify no-affinity

Available options:
- Core 0 (PRO CPU) (BT_NIMBLE_PINNED_TO_CORE_0)
- Core 1 (APP CPU) (BT_NIMBLE_PINNED_TO_CORE_1)

CONFIG_BT_NIMBLE_TASK_STACK_SIZE

NimBLE Host task stack size

Found in: Component config > Bluetooth > NimBLE Options

This configures stack size of NimBLE host task

Default value:
- 5120 if *CONFIG_BLE_MESH* && BT_NIMBLE_ENABLED && BT_NIMBLE_ENABLED
- 4096 if BT_NIMBLE_ENABLED && BT_NIMBLE_ENABLED

CONFIG_BT_NIMBLE_ROLE_CENTRAL

Enable BLE Central role

Found in: Component config > Bluetooth > NimBLE Options

Default value:
- Yes (enabled) if BT_NIMBLE_ENABLED && BT_NIMBLE_ENABLED

CONFIG_BT_NIMBLE_ROLE_PERIPHERAL

Enable BLE Peripheral role

Found in: Component config > Bluetooth > NimBLE Options

Default value:
- Yes (enabled) if BT_NIMBLE_ENABLED && BT_NIMBLE_ENABLED

CONFIG_BT_NIMBLE_ROLE_BROADCASTER

Enable BLE Broadcaster role

Found in: Component config > Bluetooth > NimBLE Options

Default value:
- Yes (enabled) if BT_NIMBLE_ENABLED && BT_NIMBLE_ENABLED

CONFIG_BT_NIMBLE_ROLE_OBSERVER

Enable BLE Observer role

Found in: Component config > Bluetooth > NimBLE Options

Default value:
- Yes (enabled) if BT_NIMBLE_ENABLED && BT_NIMBLE_ENABLED

CONFIG_BT_NIMBLE_NVS_PERSIST

Persist the BLE Bonding keys in NVS

Found in: Component config > Bluetooth > NimBLE Options

Enable this flag to make bonding persistent across device reboots

Default value:
- Yes (enabled) if BT_NIMBLE_ENABLED && BT_NIMBLE_ENABLED

CONFIG_BT_NIMBLE_SM_LEGACY

Security manager legacy pairing

Found in: Component config > Bluetooth > NimBLE Options

Enable security manager legacy pairing

Default value:

- Yes (enabled) if BT_NIMBLE_ENABLED && BT_NIMBLE_ENABLED

CONFIG_BT_NIMBLE_SM_SC

Security manager secure connections (4.2)

Found in: Component config > Bluetooth > NimBLE Options

Enable security manager secure connections

Default value:

- Yes (enabled) if BT_NIMBLE_ENABLED && BT_NIMBLE_ENABLED

CONFIG_BT_NIMBLE_DEBUG

Enable extra runtime asserts and host debugging

Found in: Component config > Bluetooth > NimBLE Options

This enables extra runtime asserts and host debugging

Default value:

- No (disabled) if BT_NIMBLE_ENABLED && BT_NIMBLE_ENABLED

CONFIG_BT_NIMBLE_SM_SC_DEBUG_KEYS

Use predefined public-private key pair

Found in: Component config > Bluetooth > NimBLE Options

If this option is enabled, SM uses predefined DH key pair as described in Core Specification, Vol. 3, Part H, 2.3.5.6.1. This allows to decrypt air traffic easily and thus should only be used for debugging.

Default value:

- No (disabled) if *CONFIG_BT_NIMBLE_SM_SC* && BT_NIMBLE_ENABLED

CONFIG_BT_NIMBLE_SVC_GAP_DEVICE_NAME

BLE GAP default device name

Found in: Component config > Bluetooth > NimBLE Options

The Device Name characteristic shall contain the name of the device as an UTF-8 string. This name can be changed by using API ble_svc_gap_device_name_set()

Default value:

- "nimble" if BT_NIMBLE_ENABLED && BT_NIMBLE_ENABLED

CONFIG_BT_NIMBLE_GAP_DEVICE_NAME_MAX_LEN

Maximum length of BLE device name in octets

Found in: Component config > Bluetooth > NimBLE Options

Device Name characteristic value shall be 0 to 248 octets in length

Default value:

- 31 if BT_NIMBLE_ENABLED && BT_NIMBLE_ENABLED

CONFIG_BT_NIMBLE_ATT_PREFERRED_MTU

Preferred MTU size in octets

Found in: Component config > Bluetooth > NimBLE Options

This is the default value of ATT MTU indicated by the device during an ATT MTU exchange. This value can be changed using API ble_att_set_preferred_mtu()

Default value:

- 256 if BT_NIMBLE_ENABLED && BT_NIMBLE_ENABLED

CONFIG_BT_NIMBLE_SVC_GAP_APPEARANCE

External appearance of the device

Found in: Component config > Bluetooth > NimBLE Options

Standard BLE GAP Appearance value in HEX format e.g. 0x02C0

Default value:

- 0 if BT_NIMBLE_ENABLED && BT_NIMBLE_ENABLED

CONFIG_BT_NIMBLE_ACL_BUF_COUNT

ACL Buffer count

Found in: Component config > Bluetooth > NimBLE Options

The number of ACL data buffers.

Default value:

- 20 if BT_NIMBLE_ENABLED && BT_NIMBLE_ENABLED

CONFIG_BT_NIMBLE_ACL_BUF_SIZE

ACL Buffer size

Found in: Component config > Bluetooth > NimBLE Options

This is the maximum size of the data portion of HCI ACL data packets. It does not include the HCI data header (of 4 bytes)

Default value:

- 255 if BT_NIMBLE_ENABLED && BT_NIMBLE_ENABLED

CONFIG_BT_NIMBLE_HCI_EVT_BUF_SIZE

HCI Event Buffer size

Found in: Component config > Bluetooth > NimBLE Options

This is the size of each HCI event buffer in bytes. In case of extended advertising, packets can be fragmented. 257 bytes is the maximum size of a packet.

Default value:

- 70 if BT_NIMBLE_ENABLED && BT_NIMBLE_ENABLED

CONFIG_BT_NIMBLE_HCI_EVT_HI_BUF_COUNT

High Priority HCI Event Buffer count

Found in: Component config > Bluetooth > NimBLE Options

This is the high priority HCI events' buffer size. High-priority event buffers are for everything except advertising reports. If there are no free high-priority event buffers then host will try to allocate a low-priority buffer instead

Default value:

- 30 if BT_NIMBLE_ENABLED && BT_NIMBLE_ENABLED

CONFIG_BT_NIMBLE_HCI_EVT_LO_BUF_COUNT

Low Priority HCI Event Buffer count

Found in: Component config > Bluetooth > NimBLE Options

This is the low priority HCI events' buffer size. Low-priority event buffers are only used for advertising reports. If there are no free low-priority event buffers, then an incoming advertising report will get dropped

Default value:

- 8 if BT_NIMBLE_ENABLED && BT_NIMBLE_ENABLED

CONFIG_BT_NIMBLE_MSYS1_BLOCK_COUNT

MSYS_1 Block Count

Found in: Component config > Bluetooth > NimBLE Options

MSYS is a system level mbuf registry. For prepare write & prepare responses MBUFs are allocated out of msys_1 pool. For NIMBLE_MESH enabled cases, this block count is increased by 8 than user defined count.

Default value:

- 12 if BT_NIMBLE_ENABLED && BT_NIMBLE_ENABLED

CONFIG_BT_NIMBLE_HS_FLOW_CTRL

Enable Host Flow control

Found in: Component config > Bluetooth > NimBLE Options

Enable Host Flow control

Default value:

- Yes (enabled) if BT_NIMBLE_ENABLED && BT_NIMBLE_ENABLED

CONFIG_BT_NIMBLE_HS_FLOW_CTRL_ITVL

Host Flow control interval

Found in: Component config > Bluetooth > NimBLE Options > CONFIG_BT_NIMBLE_HS_FLOW_CTRL

Host flow control interval in msecs

Default value:

- 1000 if *CONFIG_BT_NIMBLE_HS_FLOW_CTRL* && BT_NIMBLE_ENABLED

CONFIG_BT_NIMBLE_HS_FLOW_CTRL_THRESH

Host Flow control threshold

Found in: Component config > Bluetooth > NimBLE Options > CONFIG_BT_NIMBLE_HS_FLOW_CTRL

Host flow control threshold, if the number of free buffers are at or below this threshold, send an immediate number-of-completed-packets event

Default value:

- 2 if *CONFIG_BT_NIMBLE_HS_FLOW_CTRL* && BT_NIMBLE_ENABLED

CONFIG_BT_NIMBLE_HS_FLOW_CTRL_TX_ON_DISCONNECT

Host Flow control on disconnect

Found in: Component config > Bluetooth > NimBLE Options > CONFIG_BT_NIMBLE_HS_FLOW_CTRL

Enable this option to send number-of-completed-packets event to controller after disconnection

Default value:

- Yes (enabled) if *CONFIG_BT_NIMBLE_HS_FLOW_CTRL* && BT_NIMBLE_ENABLED

CONFIG_BT_NIMBLE_RPA_TIMEOUT

RPA timeout in seconds

Found in: Component config > Bluetooth > NimBLE Options

Time interval between RPA address change. This is applicable in case of Host based RPA

Range:

- from 1 to 41400 if BT_NIMBLE_ENABLED && BT_NIMBLE_ENABLED

Default value:

- 900 if BT_NIMBLE_ENABLED && BT_NIMBLE_ENABLED

CONFIG_BT_NIMBLE_MESH

Enable BLE mesh functionality

Found in: Component config > Bluetooth > NimBLE Options

Enable BLE Mesh functionality

Default value:

- No (disabled) if BT_NIMBLE_ENABLED && BT_NIMBLE_ENABLED

Contains:

- *CONFIG_BT_NIMBLE_MESH_PROVISIONER*
- *CONFIG_BT_NIMBLE_MESH_PROV*
- *CONFIG_BT_NIMBLE_MESH_GATT_PROXY*
- *CONFIG_BT_NIMBLE_MESH_FRIEND*
- *CONFIG_BT_NIMBLE_MESH_LOW_POWER*
- *CONFIG_BT_NIMBLE_MESH_PROXY*
- *CONFIG_BT_NIMBLE_MESH_RELAY*
- *CONFIG_BT_NIMBLE_MESH_DEVICE_NAME*
- *CONFIG_BT_NIMBLE_MESH_NODE_COUNT*

CONFIG_BT_NIMBLE_MESH_PROXY

Enable mesh proxy functionality

Found in: Component config > Bluetooth > NimBLE Options > CONFIG_BT_NIMBLE_MESH

Enable proxy. This is automatically set whenever NIMBLE_MESH_PB_GATT or NIMBLE_MESH_GATT_PROXY is set

Default value:

- No (disabled) if *CONFIG_BT_NIMBLE_MESH* && BT_NIMBLE_ENABLED

CONFIG_BT_NIMBLE_MESH_PROV

Enable BLE mesh provisioning

Found in: Component config > Bluetooth > NimBLE Options > CONFIG_BT_NIMBLE_MESH

Enable mesh provisioning

Default value:

- Yes (enabled) if *CONFIG_BT_NIMBLE_MESH* && BT_NIMBLE_ENABLED

CONFIG_BT_NIMBLE_MESH_PB_ADV

Enable mesh provisioning over advertising bearer

Found in: Component config > Bluetooth > NimBLE Options > CONFIG_BT_NIMBLE_MESH > CONFIG_BT_NIMBLE_MESH_PROV

Enable this option to allow the device to be provisioned over the advertising bearer

Default value:

- Yes (enabled) if *CONFIG_BT_NIMBLE_MESH_PROV* && BT_NIMBLE_ENABLED

CONFIG_BT_NIMBLE_MESH_PB_GATT

Enable mesh provisioning over GATT bearer

Found in: Component config > Bluetooth > NimBLE Options > CONFIG_BT_NIMBLE_MESH > CONFIG_BT_NIMBLE_MESH_PROV

Enable this option to allow the device to be provisioned over the GATT bearer

Default value:

- Yes (enabled) if *CONFIG_BT_NIMBLE_MESH_PROV* && BT_NIMBLE_ENABLED

CONFIG_BT_NIMBLE_MESH_GATT_PROXY

Enable GATT Proxy functionality

Found in: Component config > Bluetooth > NimBLE Options > CONFIG_BT_NIMBLE_MESH

This option enables support for the Mesh GATT Proxy Service, i.e. the ability to act as a proxy between a Mesh GATT Client and a Mesh network

Default value:

- Yes (enabled) if *CONFIG_BT_NIMBLE_MESH* && BT_NIMBLE_ENABLED

CONFIG_BT_NIMBLE_MESH_RELAY

Enable mesh relay functionality

Found in: Component config > Bluetooth > NimBLE Options > CONFIG_BT_NIMBLE_MESH

Support for acting as a Mesh Relay Node

Default value:

- No (disabled) if *CONFIG_BT_NIMBLE_MESH* && BT_NIMBLE_ENABLED

CONFIG_BT_NIMBLE_MESH_LOW_POWER

Enable mesh low power mode

Found in: Component config > Bluetooth > NimBLE Options > CONFIG_BT_NIMBLE_MESH

Enable this option to be able to act as a Low Power Node

Default value:

- No (disabled) if *CONFIG_BT_NIMBLE_MESH* && BT_NIMBLE_ENABLED

CONFIG_BT_NIMBLE_MESH_FRIEND

Enable mesh friend functionality

Found in: Component config > Bluetooth > NimBLE Options > CONFIG_BT_NIMBLE_MESH

Enable this option to be able to act as a Friend Node

Default value:

- No (disabled) if *CONFIG_BT_NIMBLE_MESH* && BT_NIMBLE_ENABLED

CONFIG_BT_NIMBLE_MESH_DEVICE_NAME

Set mesh device name

Found in: Component config > Bluetooth > NimBLE Options > CONFIG_BT_NIMBLE_MESH

This value defines Bluetooth Mesh device/node name

Default value:

- "nimble-mesh-node" if *CONFIG_BT_NIMBLE_MESH* && BT_NIMBLE_ENABLED

CONFIG_BT_NIMBLE_MESH_NODE_COUNT

Set mesh node count

Found in: Component config > Bluetooth > NimBLE Options > CONFIG_BT_NIMBLE_MESH

Defines mesh node count.

Default value:

- 1 if *CONFIG_BT_NIMBLE_MESH* && BT_NIMBLE_ENABLED

CONFIG_BT_NIMBLE_MESH_PROVISIONER

Enable BLE mesh provisioner

Found in: Component config > Bluetooth > NimBLE Options > CONFIG_BT_NIMBLE_MESH

Enable mesh provisioner.

Default value:

- 0 if *CONFIG_BT_NIMBLE_MESH* && BT_NIMBLE_ENABLED

CONFIG_BT_NIMBLE_CRYPTO_STACK_MBEDTLS

Override TinyCrypt with mbedTLS for crypto computations

Found in: Component config > Bluetooth > NimBLE Options

Enable this option to choose mbedTLS instead of TinyCrypt for crypto computations.

Default value:

- Yes (enabled) if BT_NIMBLE_ENABLED && BT_NIMBLE_ENABLED

CONFIG_BT_NIMBLE_HS_STOP_TIMEOUT_MS

BLE host stop timeout in msec

Found in: Component config > Bluetooth > NimBLE Options

BLE Host stop procedure timeout in milliseconds.

Default value:

- 2000 if BT_NIMBLE_ENABLED && BT_NIMBLE_ENABLED

CONFIG_BT_NIMBLE_ENABLE_CONN_REATTEMPT

Enable connection reattempts on connection establishment error

Found in: Component config > Bluetooth > NimBLE Options

Enable to make the NimBLE host to reattempt GAP connection on connection establishment failure.

Default value:

- No (disabled) if BT_NIMBLE_ENABLED

CONFIG_BT_NIMBLE_MAX_CONN_REATTEMPT

Maximum number connection reattempts

Found in: Component config > Bluetooth > NimBLE Options > CONFIG_BT_NIMBLE_ENABLE_CONN_REATTEMPT

Defines maximum number of connection reattempts.

Range:

- from 1 to 7 if BT_NIMBLE_ENABLED && *CONFIG_BT_NIMBLE_ENABLE_CONN_REATTEMPT* && BT_NIMBLE_ENABLED

Default value:

- 3 if BT_NIMBLE_ENABLED && *CONFIG_BT_NIMBLE_ENABLE_CONN_REATTEMPT* && BT_NIMBLE_ENABLED

CONFIG_BT_NIMBLE_BLUFI_ENABLE

Enable blufi functionality

Found in: Component config > Bluetooth > NimBLE Options

Set this option to enable blufi functionality.

Default value:

- No (disabled) if BT_NIMBLE_ENABLED && BT_NIMBLE_ENABLED

CONFIG_BT_NIMBLE_USE_ESP_TIMER

Enable Esp Timer for Nimble

Found in: Component config > Bluetooth > NimBLE Options

Set this option to use Esp Timer which has higher priority timer instead of FreeRTOS timer

Default value:

- Yes (enabled) if BT_NIMBLE_ENABLED

CONFIG_BLE_MESH

ESP BLE Mesh Support

Found in: Component config

This option enables ESP BLE Mesh support. The specific features that are available may depend on other features that have been enabled in the stack, such as Bluetooth Support, Bluedroid Support & GATT support.

Contains:

- *BLE Mesh and BLE coexistence support*
- *CONFIG_BLE_MESH_GATT_PROXY_CLIENT*

- *CONFIG_BLE_MESH_GATT_PROXY_SERVER*
- *BLE Mesh NET BUF DEBUG LOG LEVEL*
- *CONFIG_BLE_MESH_PROV*
- *CONFIG_BLE_MESH_PROXY*
- *BLE Mesh specific test option*
- *BLE Mesh STACK DEBUG LOG LEVEL*
- *CONFIG_BLE_MESH_NO_LOG*
- *CONFIG_BLE_MESH_IVU_DIVIDER*
- *CONFIG_BLE_MESH_FAST_PROV*
- *CONFIG_BLE_MESH_FREERTOS_STATIC_ALLOC*
- *CONFIG_BLE_MESH_CRPL*
- *CONFIG_BLE_MESH_RX_SDU_MAX*
- *CONFIG_BLE_MESH_MODEL_KEY_COUNT*
- *CONFIG_BLE_MESH_APP_KEY_COUNT*
- *CONFIG_BLE_MESH_MODEL_GROUP_COUNT*
- *CONFIG_BLE_MESH_LABEL_COUNT*
- *CONFIG_BLE_MESH_SUBNET_COUNT*
- *CONFIG_BLE_MESH_TX_SEG_MAX*
- *CONFIG_BLE_MESH_RX_SEG_MSG_COUNT*
- *CONFIG_BLE_MESH_TX_SEG_MSG_COUNT*
- *CONFIG_BLE_MESH_MEM_ALLOC_MODE*
- *CONFIG_BLE_MESH_MSG_CACHE_SIZE*
- *CONFIG_BLE_MESH_ADV_BUF_COUNT*
- *CONFIG_BLE_MESH_PB_GATT*
- *CONFIG_BLE_MESH_PB_ADV*
- *CONFIG_BLE_MESH_RELAY*
- *CONFIG_BLE_MESH_SETTINGS*
- *CONFIG_BLE_MESH_DEINIT*
- *CONFIG_BLE_MESH_USE_DUPLICATE_SCAN*
- *Support for BLE Mesh Client/Server models*
- *Support for BLE Mesh Foundation models*
- *CONFIG_BLE_MESH_NODE*
- *CONFIG_BLE_MESH_PROVISIONER*
- *CONFIG_BLE_MESH_FRIEND*
- *CONFIG_BLE_MESH_LOW_POWER*
- *CONFIG_BLE_MESH_HCI_5_0*
- *CONFIG_BLE_MESH_IV_UPDATE_TEST*
- *CONFIG_BLE_MESH_CLIENT_MSG_TIMEOUT*

CONFIG_BLE_MESH_HCI_5_0

Support sending 20ms non-connectable adv packets

Found in: Component config > CONFIG_BLE_MESH

It is a temporary solution and needs further modifications.

Default value:

- Yes (enabled) if *CONFIG_BLE_MESH*

CONFIG_BLE_MESH_USE_DUPLICATE_SCAN

Support Duplicate Scan in BLE Mesh

Found in: Component config > CONFIG_BLE_MESH

Enable this option to allow using specific duplicate scan filter in BLE Mesh, and Scan Duplicate Type must be set by choosing the option in the Bluetooth Controller section in menuconfig, which is "Scan Duplicate By Device Address and Advertising Data".

Default value:

- Yes (enabled) if BT_BLUEDROID_ENABLED && *CONFIG_BLE_MESH*

CONFIG_BLE_MESH_MEM_ALLOC_MODE

Memory allocation strategy

Found in: Component config > CONFIG_BLE_MESH

Allocation strategy for BLE Mesh stack, essentially provides ability to allocate all required dynamic allocations from,

- Internal DRAM memory only
- External SPIRAM memory only
- Either internal or external memory based on default malloc() behavior in ESP-IDF
- Internal IRAM memory wherever applicable else internal DRAM

Recommended mode here is always internal (*), since that is most preferred from security perspective. But if application requirement does not allow sufficient free internal memory then alternate mode can be selected.

(*) In case of ESP32-S2/ESP32-S3, hardware allows encryption of external SPIRAM contents provided hardware flash encryption feature is enabled. In that case, using external SPIRAM allocation strategy is also safe choice from security perspective.

Available options:

- Internal DRAM (BLE_MESH_MEM_ALLOC_MODE_INTERNAL)
- External SPIRAM (BLE_MESH_MEM_ALLOC_MODE_EXTERNAL)
- Default alloc mode (BLE_MESH_MEM_ALLOC_MODE_DEFAULT)
  Enable this option to use the default memory allocation strategy when external SPIRAM is enabled. See the SPIRAM options for more details.
- Internal IRAM (BLE_MESH_MEM_ALLOC_MODE_IRAM_8BIT)
  Allows to use IRAM memory region as 8bit accessible region. Every unaligned (8bit or 16bit) access will result in an exception and incur penalty of certain clock cycles per unaligned read/write.

CONFIG_BLE_MESH_FREERTOS_STATIC_ALLOC

Enable FreeRTOS static allocation

Found in: Component config > CONFIG_BLE_MESH

Enable this option to use FreeRTOS static allocation APIs for BLE Mesh, which provides the ability to use different dynamic memory (i.e. SPIRAM or IRAM) for FreeRTOS objects. If this option is disabled, the FreeRTOS static allocation APIs will not be used, and internal DRAM will be allocated for FreeRTOS objects.

Default value:

- No (disabled) if (*CONFIG_ESP32_SPIRAM_SUPPORT* || *CONFIG_ESP32_IRAM_AS_8BIT_ACCESSIBLE_MEMORY*) && *CONFIG_BLE_MESH*

CONFIG_BLE_MESH_FREERTOS_STATIC_ALLOC_MODE

Memory allocation for FreeRTOS objects

Found in: Component config > CONFIG_BLE_MESH > CONFIG_BLE_MESH_FREERTOS_STATIC_ALLOC

Choose the memory to be used for FreeRTOS objects.

Available options:

- External SPIRAM (BLE_MESH_FREERTOS_STATIC_ALLOC_EXTERNAL)
  If enabled, BLE Mesh allocates dynamic memory from external SPIRAM for FreeRTOS objects, i.e. mutex, queue, and task stack. External SPIRAM can only be used for task stack

when SPIRAM_ALLOW_STACK_EXTERNAL_MEMORY is enabled. See the SPIRAM options for more details.
- Internal IRAM (BLE_MESH_FREERTOS_STATIC_ALLOC_IRAM_8BIT)
  If enabled, BLE Mesh allocates dynamic memory from internal IRAM for FreeRTOS objects, i.e. mutex, queue. Note: IRAM region cannot be used as task stack.

CONFIG_BLE_MESH_DEINIT

Support de-initialize BLE Mesh stack

Found in: Component config > CONFIG_BLE_MESH

If enabled, users can use the function esp_ble_mesh_deinit() to de-initialize the whole BLE Mesh stack.

Default value:
- Yes (enabled) if *CONFIG_BLE_MESH*

BLE Mesh and BLE coexistence support

Contains:

- *CONFIG_BLE_MESH_SUPPORT_BLE_SCAN*
- *CONFIG_BLE_MESH_SUPPORT_BLE_ADV*

CONFIG_BLE_MESH_SUPPORT_BLE_ADV

Support sending normal BLE advertising packets

Found in: Component config > CONFIG_BLE_MESH > BLE Mesh and BLE coexistence support

When selected, users can send normal BLE advertising packets with specific API.

Default value:
- No (disabled) if *CONFIG_BLE_MESH*

CONFIG_BLE_MESH_BLE_ADV_BUF_COUNT

Number of advertising buffers for BLE advertising packets

Found in: Component config > CONFIG_BLE_MESH > BLE Mesh and BLE coexistence support > CONFIG_BLE_MESH_SUPPORT_BLE_ADV

Number of advertising buffers for BLE packets available.

Range:
- from 1 to 255 if *CONFIG_BLE_MESH_SUPPORT_BLE_ADV* && *CONFIG_BLE_MESH*

Default value:
- 3 if *CONFIG_BLE_MESH_SUPPORT_BLE_ADV* && *CONFIG_BLE_MESH*

CONFIG_BLE_MESH_SUPPORT_BLE_SCAN

Support scanning normal BLE advertising packets

Found in: Component config > CONFIG_BLE_MESH > BLE Mesh and BLE coexistence support

When selected, users can register a callback and receive normal BLE advertising packets in the application layer.

Default value:
- No (disabled) if *CONFIG_BLE_MESH*

CONFIG_BLE_MESH_FAST_PROV

Enable BLE Mesh Fast Provisioning

Found in: Component config > CONFIG_BLE_MESH

Enable this option to allow BLE Mesh fast provisioning solution to be used. When there are multiple unprovisioned devices around, fast provisioning can greatly reduce the time consumption of the whole provisioning process. When this option is enabled, and after an unprovisioned device is provisioned into a node successfully, it can be changed to a temporary Provisioner.

Default value:

- No (disabled) if *CONFIG_BLE_MESH*

CONFIG_BLE_MESH_NODE

Support for BLE Mesh Node

Found in: Component config > CONFIG_BLE_MESH

Enable the device to be provisioned into a node. This option should be enabled when an unprovisioned device is going to be provisioned into a node and communicate with other nodes in the BLE Mesh network.

CONFIG_BLE_MESH_PROVISIONER

Support for BLE Mesh Provisioner

Found in: Component config > CONFIG_BLE_MESH

Enable the device to be a Provisioner. The option should be enabled when a device is going to act as a Provisioner and provision unprovisioned devices into the BLE Mesh network.

CONFIG_BLE_MESH_WAIT_FOR_PROV_MAX_DEV_NUM

Maximum number of unprovisioned devices that can be added to device queue

Found in: Component config > CONFIG_BLE_MESH > CONFIG_BLE_MESH_PROVISIONER

This option specifies how many unprovisioned devices can be added to device queue for provisioning. Users can use this option to define the size of the queue in the bottom layer which is used to store unprovisioned device information (e.g. Device UUID, address).

Range:

- from 1 to 100 if *CONFIG_BLE_MESH_PROVISIONER* && *CONFIG_BLE_MESH*

Default value:

- 10 if *CONFIG_BLE_MESH_PROVISIONER* && *CONFIG_BLE_MESH*

CONFIG_BLE_MESH_MAX_PROV_NODES

Maximum number of devices that can be provisioned by Provisioner

Found in: Component config > CONFIG_BLE_MESH > CONFIG_BLE_MESH_PROVISIONER

This option specifies how many devices can be provisioned by a Provisioner. This value indicates the maximum number of unprovisioned devices which can be provisioned by a Provisioner. For instance, if the value is 6, it means the Provisioner can provision up to 6 unprovisioned devices. Theoretically a Provisioner without the limitation of its memory can provision up to 32766 unprovisioned devices, here we limit the maximum number to 100 just to limit the memory used by a Provisioner. The bigger the value is, the more memory it will cost by a Provisioner to store the information of nodes.

Range:

- from 1 to 1000 if *CONFIG_BLE_MESH_PROVISIONER* && *CONFIG_BLE_MESH*

Default value:

- 10 if *CONFIG_BLE_MESH_PROVISIONER* && *CONFIG_BLE_MESH*

CONFIG_BLE_MESH_PBA_SAME_TIME

Maximum number of PB-ADV running at the same time by Provisioner

Found in: Component config > *CONFIG_BLE_MESH* > *CONFIG_BLE_MESH_PROVISIONER*

This option specifies how many devices can be provisioned at the same time using PB-ADV. For examples, if the value is 2, it means a Provisioner can provision two unprovisioned devices with PB-ADV at the same time.

Range:

- from 1 to 10 if *CONFIG_BLE_MESH_PB_ADV* && *CONFIG_BLE_MESH_PROVISIONER* && *CONFIG_BLE_MESH*

Default value:

- 2 if *CONFIG_BLE_MESH_PB_ADV* && *CONFIG_BLE_MESH_PROVISIONER* && *CONFIG_BLE_MESH*

CONFIG_BLE_MESH_PBG_SAME_TIME

Maximum number of PB-GATT running at the same time by Provisioner

Found in: Component config > *CONFIG_BLE_MESH* > *CONFIG_BLE_MESH_PROVISIONER*

This option specifies how many devices can be provisioned at the same time using PB-GATT. For example, if the value is 2, it means a Provisioner can provision two unprovisioned devices with PB-GATT at the same time.

Range:

- from 1 to 5 if *CONFIG_BLE_MESH_PB_GATT* && *CONFIG_BLE_MESH_PROVISIONER* && *CONFIG_BLE_MESH*

Default value:

- 1 if *CONFIG_BLE_MESH_PB_GATT* && *CONFIG_BLE_MESH_PROVISIONER* && *CONFIG_BLE_MESH*

CONFIG_BLE_MESH_PROVISIONER_SUBNET_COUNT

Maximum number of mesh subnets that can be created by Provisioner

Found in: Component config > *CONFIG_BLE_MESH* > *CONFIG_BLE_MESH_PROVISIONER*

This option specifies how many subnets per network a Provisioner can create. Indeed, this value decides the number of network keys which can be added by a Provisioner.

Range:

- from 1 to 4096 if *CONFIG_BLE_MESH_PROVISIONER* && *CONFIG_BLE_MESH*

Default value:

- 3 if *CONFIG_BLE_MESH_PROVISIONER* && *CONFIG_BLE_MESH*

CONFIG_BLE_MESH_PROVISIONER_APP_KEY_COUNT

Maximum number of application keys that can be owned by Provisioner

Found in: Component config > *CONFIG_BLE_MESH* > *CONFIG_BLE_MESH_PROVISIONER*

This option specifies how many application keys the Provisioner can have. Indeed, this value decides the number of the application keys which can be added by a Provisioner.

Range:

- from 1 to 4096 if *CONFIG_BLE_MESH_PROVISIONER* && *CONFIG_BLE_MESH*

Default value:

- 3 if *CONFIG_BLE_MESH_PROVISIONER* && *CONFIG_BLE_MESH*

CONFIG_BLE_MESH_PROVISIONER_RECV_HB

Support receiving Heartbeat messages

Found in: Component config > CONFIG_BLE_MESH > CONFIG_BLE_MESH_PROVISIONER

When this option is enabled, Provisioner can call specific functions to enable or disable receiving Heartbeat messages and notify them to the application layer.

Default value:

- No (disabled) if *CONFIG_BLE_MESH_PROVISIONER* && *CONFIG_BLE_MESH*

CONFIG_BLE_MESH_PROVISIONER_RECV_HB_FILTER_SIZE

Maximum number of filter entries for receiving Heartbeat messages

Found in: Component config > CONFIG_BLE_MESH > CONFIG_BLE_MESH_PROVISIONER > CONFIG_BLE_MESH_PROVISIONER_RECV_HB

This option specifies how many heartbeat filter entries Provisioner supports. The heartbeat filter (acceptlist or rejectlist) entries are used to store a list of SRC and DST which can be used to decide if a heartbeat message will be processed and notified to the application layer by Provisioner. Note: The filter is an empty rejectlist by default.

Range:

- from 1 to 1000 if *CONFIG_BLE_MESH_PROVISIONER_RECV_HB* && *CONFIG_BLE_MESH_PROVISIONER* && *CONFIG_BLE_MESH*

Default value:

- 3 if *CONFIG_BLE_MESH_PROVISIONER_RECV_HB* && *CONFIG_BLE_MESH_PROVISIONER* && *CONFIG_BLE_MESH*

CONFIG_BLE_MESH_PROV

BLE Mesh Provisioning support

Found in: Component config > CONFIG_BLE_MESH

Enable this option to support BLE Mesh Provisioning functionality. For BLE Mesh, this option should be always enabled.

Default value:

- Yes (enabled) if *CONFIG_BLE_MESH*

CONFIG_BLE_MESH_PB_ADV

Provisioning support using the advertising bearer (PB-ADV)

Found in: Component config > CONFIG_BLE_MESH

Enable this option to allow the device to be provisioned over the advertising bearer. This option should be enabled if PB-ADV is going to be used during provisioning procedure.

Default value:

- Yes (enabled) if *CONFIG_BLE_MESH*

CONFIG_BLE_MESH_UNPROVISIONED_BEACON_INTERVAL

Interval between two consecutive Unprovisioned Device Beacon

Found in: Component config > CONFIG_BLE_MESH > CONFIG_BLE_MESH_PB_ADV

This option specifies the interval of sending two consecutive unprovisioned device beacon, users can use this option to change the frequency of sending unprovisioned device beacon. For example, if the value is 5, it means the unprovisioned device beacon will send every 5 seconds. When the option of BLE_MESH_FAST_PROV is selected, the value is better to be 3 seconds, or less.

Range:

- from 1 to 100 if *CONFIG_BLE_MESH_NODE* && *CONFIG_BLE_MESH_PB_ADV* && *CONFIG_BLE_MESH*

Default value:

- 5 if *CONFIG_BLE_MESH_NODE* && *CONFIG_BLE_MESH_PB_ADV* && *CONFIG_BLE_MESH*
- 3 if *CONFIG_BLE_MESH_FAST_PROV* && *CONFIG_BLE_MESH_NODE* && *CONFIG_BLE_MESH_PB_ADV* && *CONFIG_BLE_MESH*

CONFIG_BLE_MESH_PB_GATT

Provisioning support using GATT (PB-GATT)

Found in: Component config > CONFIG_BLE_MESH

Enable this option to allow the device to be provisioned over GATT. This option should be enabled if PB-GATT is going to be used during provisioning procedure.

Virtual option enabled whenever any Proxy protocol is needed

CONFIG_BLE_MESH_PROXY

BLE Mesh Proxy protocol support

Found in: Component config > CONFIG_BLE_MESH

Enable this option to support BLE Mesh Proxy protocol used by PB-GATT and other proxy pdu transmission.

Default value:

- Yes (enabled) if *CONFIG_BLE_MESH*

CONFIG_BLE_MESH_GATT_PROXY_SERVER

BLE Mesh GATT Proxy Server

Found in: Component config > CONFIG_BLE_MESH

This option enables support for Mesh GATT Proxy Service, i.e. the ability to act as a proxy between a Mesh GATT Client and a Mesh network. This option should be enabled if a node is going to be a Proxy Server.

Default value:

- Yes (enabled) if *CONFIG_BLE_MESH_NODE* && *CONFIG_BLE_MESH*

CONFIG_BLE_MESH_NODE_ID_TIMEOUT

Node Identity advertising timeout

Found in: Component config > CONFIG_BLE_MESH > CONFIG_BLE_MESH_GATT_PROXY_SERVER

This option determines for how long the local node advertises using Node Identity. The given value is in seconds. The specification limits this to 60 seconds and lists it as the recommended value as well. So leaving the default value is the safest option. When an unprovisioned device is provisioned successfully and becomes a node, it will start to advertise using Node Identity during the time set by this option. And after that, Network ID will be advertised.

Range:

- from 1 to 60 if *CONFIG_BLE_MESH_GATT_PROXY_SERVER* && *CONFIG_BLE_MESH*

Default value:

- 60 if *CONFIG_BLE_MESH_GATT_PROXY_SERVER* && *CONFIG_BLE_MESH*

CONFIG_BLE_MESH_PROXY_FILTER_SIZE

Maximum number of filter entries per Proxy Client

Found in: Component config > CONFIG_BLE_MESH > CONFIG_BLE_MESH_GATT_PROXY_SERVER

This option specifies how many Proxy Filter entries the local node supports. The entries of Proxy filter (whitelist or blacklist) are used to store a list of addresses which can be used to decide which messages will be forwarded to the Proxy Client by the Proxy Server.

Range:

- from 1 to 32767 if *CONFIG_BLE_MESH_GATT_PROXY_SERVER* && *CONFIG_BLE_MESH*

Default value:

- 4 if *CONFIG_BLE_MESH_GATT_PROXY_SERVER* && *CONFIG_BLE_MESH*

CONFIG_BLE_MESH_GATT_PROXY_CLIENT

BLE Mesh GATT Proxy Client

Found in: Component config > CONFIG_BLE_MESH

This option enables support for Mesh GATT Proxy Client. The Proxy Client can use the GATT bearer to send mesh messages to a node that supports the advertising bearer.

Default value:

- No (disabled) if *CONFIG_BLE_MESH*

CONFIG_BLE_MESH_SETTINGS

Store BLE Mesh configuration persistently

Found in: Component config > CONFIG_BLE_MESH

When selected, the BLE Mesh stack will take care of storing/restoring the BLE Mesh configuration persistently in flash. If the device is a BLE Mesh node, when this option is enabled, the configuration of the device will be stored persistently, including unicast address, NetKey, AppKey, etc. And if the device is a BLE Mesh Provisioner, the information of the device will be stored persistently, including the information of provisioned nodes, NetKey, AppKey, etc.

Default value:

- No (disabled) if *CONFIG_BLE_MESH*

CONFIG_BLE_MESH_STORE_TIMEOUT

Delay (in seconds) before storing anything persistently

Found in: Component config > CONFIG_BLE_MESH > CONFIG_BLE_MESH_SETTINGS

This value defines in seconds how soon any pending changes are actually written into persistent storage (flash) after a change occurs. The option allows nodes to delay a certain period of time to save proper information to flash. The default value is 0, which means information will be stored immediately once there are updates.

Range:

- from 0 to 1000000 if *CONFIG_BLE_MESH_SETTINGS* && *CONFIG_BLE_MESH*

Default value:

- 0 if *CONFIG_BLE_MESH_SETTINGS* && *CONFIG_BLE_MESH*

CONFIG_BLE_MESH_SEQ_STORE_RATE

How often the sequence number gets updated in storage

Found in: Component config > CONFIG_BLE_MESH > CONFIG_BLE_MESH_SETTINGS

This value defines how often the local sequence number gets updated in persistent storage (i.e. flash). e.g. a value of 100 means that the sequence number will be stored to flash on every 100th increment. If the node sends messages very frequently a higher value makes more sense, whereas if the node sends infrequently a value as low as 0 (update storage for every increment) can make sense. When the stack gets initialized it will add sequence number to the last stored one, so that it starts off with a value that's guaranteed to be larger than the last one used before power off.

Range:

- from 0 to 1000000 if *CONFIG_BLE_MESH_SETTINGS* && *CONFIG_BLE_MESH*

Default value:

- 0 if *CONFIG_BLE_MESH_SETTINGS* && *CONFIG_BLE_MESH*

CONFIG_BLE_MESH_RPL_STORE_TIMEOUT

Minimum frequency that the RPL gets updated in storage

Found in: Component config > CONFIG_BLE_MESH > CONFIG_BLE_MESH_SETTINGS

This value defines in seconds how soon the RPL (Replay Protection List) gets written to persistent storage after a change occurs. If the node receives messages frequently, then a large value is recommended. If the node receives messages rarely, then the value can be as low as 0 (which means the RPL is written into the storage immediately). Note that if the node operates in a security-sensitive case, and there is a risk of sudden power-off, then a value of 0 is strongly recommended. Otherwise, a power loss before RPL being written into the storage may introduce message replay attacks and system security will be in a vulnerable state.

Range:

- from 0 to 1000000 if *CONFIG_BLE_MESH_SETTINGS* && *CONFIG_BLE_MESH*

Default value:

- 0 if *CONFIG_BLE_MESH_SETTINGS* && *CONFIG_BLE_MESH*

CONFIG_BLE_MESH_SETTINGS_BACKWARD_COMPATIBILITY

A specific option for settings backward compatibility

Found in: Component config > CONFIG_BLE_MESH > CONFIG_BLE_MESH_SETTINGS

This option is created to solve the issue of failure in recovering node information after mesh stack updates. In the old version mesh stack, there is no key of "mesh/role" in nvs. In the new version mesh stack, key of "mesh/role" is added in nvs, recovering node information needs to check "mesh/role" key in nvs and implements selective recovery of mesh node information. Therefore, there may be failure in recovering node information during node restarting after OTA.

The new version mesh stack adds the option of "mesh/role" because we have added the support of storing Provisioner information, while the old version only supports storing node information.

If users are updating their nodes from old version to new version, we recommend enabling this option, so that system could set the flag in advance before recovering node information and make sure the node information recovering could work as expected.

Default value:

- No (disabled) if *CONFIG_BLE_MESH_NODE* && *CONFIG_BLE_MESH_SETTINGS* && *CONFIG_BLE_MESH*

CONFIG_BLE_MESH_SPECIFIC_PARTITION

Use a specific NVS partition for BLE Mesh

Found in: Component config > CONFIG_BLE_MESH > CONFIG_BLE_MESH_SETTINGS

When selected, the mesh stack will use a specified NVS partition instead of default NVS partition. Note that the specified partition must be registered with NVS using nvs_flash_init_partition() API, and the partition must exists in the csv file. When Provisioner needs to store a large amount of nodes ' information in the flash (e.g. more than 20), this option is recommended to be enabled.

Default value:

- No (disabled) if *CONFIG_BLE_MESH_SETTINGS* && *CONFIG_BLE_MESH*

CONFIG_BLE_MESH_PARTITION_NAME

Name of the NVS partition for BLE Mesh

Found in: Component config > *CONFIG_BLE_MESH* > *CONFIG_BLE_MESH_SETTINGS* > *CONFIG_BLE_MESH_SPECIFIC_PARTITION*

This value defines the name of the specified NVS partition used by the mesh stack.

Default value:

- "ble_mesh" if *CONFIG_BLE_MESH_SPECIFIC_PARTITION* && *CONFIG_BLE_MESH_SETTINGS* && *CONFIG_BLE_MESH*

CONFIG_BLE_MESH_USE_MULTIPLE_NAMESPACE

Support using multiple NVS namespaces by Provisioner

Found in: Component config > *CONFIG_BLE_MESH* > *CONFIG_BLE_MESH_SETTINGS*

When selected, Provisioner can use different NVS namespaces to store different instances of mesh information. For example, if in the first room, Provisioner uses NetKey A, AppKey A and provisions three devices, these information will be treated as mesh information instance A. When the Provisioner moves to the second room, it uses NetKey B, AppKey B and provisions two devices, then the information will be treated as mesh information instance B. Here instance A and instance B will be stored in different namespaces. With this option enabled, Provisioner needs to use specific functions to open the corresponding NVS namespace, restore the mesh information, release the mesh information or erase the mesh information.

Default value:

- No (disabled) if *CONFIG_BLE_MESH_PROVISIONER* && *CONFIG_BLE_MESH_SETTINGS* && *CONFIG_BLE_MESH*

CONFIG_BLE_MESH_MAX_NVS_NAMESPACE

Maximum number of NVS namespaces

Found in: Component config > *CONFIG_BLE_MESH* > *CONFIG_BLE_MESH_SETTINGS* > *CONFIG_BLE_MESH_USE_MULTIPLE_NAMESPACE*

This option specifies the maximum NVS namespaces supported by Provisioner.

Range:

- from 1 to 255 if *CONFIG_BLE_MESH_USE_MULTIPLE_NAMESPACE* && *CONFIG_BLE_MESH_SETTINGS* && *CONFIG_BLE_MESH*

Default value:

- 2 if *CONFIG_BLE_MESH_USE_MULTIPLE_NAMESPACE* && *CONFIG_BLE_MESH_SETTINGS* && *CONFIG_BLE_MESH*

CONFIG_BLE_MESH_SUBNET_COUNT

Maximum number of mesh subnets per network

Found in: Component config > *CONFIG_BLE_MESH*

This option specifies how many subnets a Mesh network can have at the same time. Indeed, this value decides the number of the network keys which can be owned by a node.

Range:
- from 1 to 4096 if *CONFIG_BLE_MESH*

Default value:
- 3 if *CONFIG_BLE_MESH*

CONFIG_BLE_MESH_APP_KEY_COUNT

Maximum number of application keys per network

Found in: Component config > CONFIG_BLE_MESH

This option specifies how many application keys the device can store per network. Indeed, this value decides the number of the application keys which can be owned by a node.

Range:
- from 1 to 4096 if *CONFIG_BLE_MESH*

Default value:
- 3 if *CONFIG_BLE_MESH*

CONFIG_BLE_MESH_MODEL_KEY_COUNT

Maximum number of application keys per model

Found in: Component config > CONFIG_BLE_MESH

This option specifies the maximum number of application keys to which each model can be bound.

Range:
- from 1 to 4096 if *CONFIG_BLE_MESH*

Default value:
- 3 if *CONFIG_BLE_MESH*

CONFIG_BLE_MESH_MODEL_GROUP_COUNT

Maximum number of group address subscriptions per model

Found in: Component config > CONFIG_BLE_MESH

This option specifies the maximum number of addresses to which each model can be subscribed.

Range:
- from 1 to 4096 if *CONFIG_BLE_MESH*

Default value:
- 3 if *CONFIG_BLE_MESH*

CONFIG_BLE_MESH_LABEL_COUNT

Maximum number of Label UUIDs used for Virtual Addresses

Found in: Component config > CONFIG_BLE_MESH

This option specifies how many Label UUIDs can be stored. Indeed, this value decides the number of the Virtual Addresses can be supported by a node.

Range:
- from 0 to 4096 if *CONFIG_BLE_MESH*

Default value:
- 3 if *CONFIG_BLE_MESH*

CONFIG_BLE_MESH_CRPL

Maximum capacity of the replay protection list

Found in: Component config > CONFIG_BLE_MESH

This option specifies the maximum capacity of the replay protection list. It is similar to Network message cache size, but has a different purpose. The replay protection list is used to prevent a node from replay attack, which will store the source address and sequence number of the received mesh messages. For Provisioner, the replay protection list size should not be smaller than the maximum number of nodes whose information can be stored. And the element number of each node should also be taken into consideration. For example, if Provisioner can provision up to 20 nodes and each node contains two elements, then the replay protection list size of Provisioner should be at least 40.

Range:
- from 2 to 65535 if *CONFIG_BLE_MESH*

Default value:
- 10 if *CONFIG_BLE_MESH*

CONFIG_BLE_MESH_MSG_CACHE_SIZE

Network message cache size

Found in: Component config > CONFIG_BLE_MESH

Number of messages that are cached for the network. This helps prevent unnecessary decryption operations and unnecessary relays. This option is similar to Replay protection list, but has a different purpose. A node is not required to cache the entire Network PDU and may cache only part of it for tracking, such as values for SRC/SEQ or others.

Range:
- from 2 to 65535 if *CONFIG_BLE_MESH*

Default value:
- 10 if *CONFIG_BLE_MESH*

CONFIG_BLE_MESH_ADV_BUF_COUNT

Number of advertising buffers

Found in: Component config > CONFIG_BLE_MESH

Number of advertising buffers available. The transport layer reserves ADV_BUF_COUNT - 3 buffers for outgoing segments. The maximum outgoing SDU size is 12 times this value (out of which 4 or 8 bytes are used for the Transport Layer MIC). For example, 5 segments means the maximum SDU size is 60 bytes, which leaves 56 bytes for application layer data using a 4-byte MIC, or 52 bytes using an 8-byte MIC.

Range:
- from 6 to 256 if *CONFIG_BLE_MESH*

Default value:
- 60 if *CONFIG_BLE_MESH*

CONFIG_BLE_MESH_IVU_DIVIDER

Divider for IV Update state refresh timer

Found in: Component config > CONFIG_BLE_MESH

When the IV Update state enters Normal operation or IV Update in Progress, we need to keep track of how many hours has passed in the state, since the specification requires us to remain in the state at least for 96 hours (Update in Progress has an additional upper limit of 144 hours).

In order to fulfill the above requirement, even if the node might be powered off once in a while, we need to store persistently how many hours the node has been in the state. This doesn't necessarily need to

happen every hour (thanks to the flexible duration range). The exact cadence will depend a lot on the ways that the node will be used and what kind of power source it has.

Since there is no single optimal answer, this configuration option allows specifying a divider, i.e. how many intervals the 96 hour minimum gets split into. After each interval the duration that the node has been in the current state gets stored to flash. E.g. the default value of 4 means that the state is saved every 24 hours (96 / 4).

Range:
- from 2 to 96 if *CONFIG_BLE_MESH*

Default value:
- 4 if *CONFIG_BLE_MESH*

CONFIG_BLE_MESH_TX_SEG_MSG_COUNT

Maximum number of simultaneous outgoing segmented messages

Found in: Component config > CONFIG_BLE_MESH

Maximum number of simultaneous outgoing multi-segment and/or reliable messages. The default value is 1, which means the device can only send one segmented message at a time. And if another segmented message is going to be sent, it should wait for the completion of the previous one. If users are going to send multiple segmented messages at the same time, this value should be configured properly.

Range:
- from 1 to if *CONFIG_BLE_MESH*

Default value:
- 1 if *CONFIG_BLE_MESH*

CONFIG_BLE_MESH_RX_SEG_MSG_COUNT

Maximum number of simultaneous incoming segmented messages

Found in: Component config > CONFIG_BLE_MESH

Maximum number of simultaneous incoming multi-segment and/or reliable messages. The default value is 1, which means the device can only receive one segmented message at a time. And if another segmented message is going to be received, it should wait for the completion of the previous one. If users are going to receive multiple segmented messages at the same time, this value should be configured properly.

Range:
- from 1 to 255 if *CONFIG_BLE_MESH*

Default value:
- 1 if *CONFIG_BLE_MESH*

CONFIG_BLE_MESH_RX_SDU_MAX

Maximum incoming Upper Transport Access PDU length

Found in: Component config > CONFIG_BLE_MESH

Maximum incoming Upper Transport Access PDU length. Leave this to the default value, unless you really need to optimize memory usage.

Range:
- from 36 to 384 if *CONFIG_BLE_MESH*

Default value:
- 384 if *CONFIG_BLE_MESH*

CONFIG_BLE_MESH_TX_SEG_MAX

Maximum number of segments in outgoing messages

Found in: Component config > CONFIG_BLE_MESH

Maximum number of segments supported for outgoing messages. This value should typically be fine-tuned based on what models the local node supports, i.e. what's the largest message payload that the node needs to be able to send. This value affects memory and call stack consumption, which is why the default is lower than the maximum that the specification would allow (32 segments).

The maximum outgoing SDU size is 12 times this number (out of which 4 or 8 bytes is used for the Transport Layer MIC). For example, 5 segments means the maximum SDU size is 60 bytes, which leaves 56 bytes for application layer data using a 4-byte MIC and 52 bytes using an 8-byte MIC.

Be sure to specify a sufficient number of advertising buffers when setting this option to a higher value. There must be at least three more advertising buffers (BLE_MESH_ADV_BUF_COUNT) as there are outgoing segments.

Range:
- from 2 to 32 if *CONFIG_BLE_MESH*

Default value:
- 32 if *CONFIG_BLE_MESH*

CONFIG_BLE_MESH_RELAY

Relay support

Found in: Component config > CONFIG_BLE_MESH

Support for acting as a Mesh Relay Node. Enabling this option will allow a node to support the Relay feature, and the Relay feature can still be enabled or disabled by proper configuration messages. Disabling this option will let a node not support the Relay feature.

Default value:
- Yes (enabled) if *CONFIG_BLE_MESH_NODE* && *CONFIG_BLE_MESH*

CONFIG_BLE_MESH_RELAY_ADV_BUF

Use separate advertising buffers for relay packets

Found in: Component config > CONFIG_BLE_MESH > CONFIG_BLE_MESH_RELAY

When selected, self-send packets will be put in a high-priority queue and relay packets will be put in a low-priority queue.

Default value:
- No (disabled) if *CONFIG_BLE_MESH_RELAY* && *CONFIG_BLE_MESH*

CONFIG_BLE_MESH_RELAY_ADV_BUF_COUNT

Number of advertising buffers for relay packets

Found in: Component config > CONFIG_BLE_MESH > CONFIG_BLE_MESH_RELAY > CONFIG_BLE_MESH_RELAY_ADV_BUF

Number of advertising buffers for relay packets available.

Range:
- from 6 to 256 if *CONFIG_BLE_MESH_RELAY_ADV_BUF* && *CONFIG_BLE_MESH_RELAY* && *CONFIG_BLE_MESH*

Default value:
- 60 if *CONFIG_BLE_MESH_RELAY_ADV_BUF* && *CONFIG_BLE_MESH_RELAY* && *CONFIG_BLE_MESH*

CONFIG_BLE_MESH_LOW_POWER

Support for Low Power features

Found in: Component config > CONFIG_BLE_MESH

Enable this option to operate as a Low Power Node. If low power consumption is required by a node, this option should be enabled. And once the node enters the mesh network, it will try to find a Friend node and establish a friendship.

CONFIG_BLE_MESH_LPN_ESTABLISHMENT

Perform Friendship establishment using low power

Found in: Component config > CONFIG_BLE_MESH > CONFIG_BLE_MESH_LOW_POWER

Perform the Friendship establishment using low power with the help of a reduced scan duty cycle. The downside of this is that the node may miss out on messages intended for it until it has successfully set up Friendship with a Friend node. When this option is enabled, the node will stop scanning for a period of time after a Friend Request or Friend Poll is sent, so as to reduce more power consumption.

Default value:

- No (disabled) if *CONFIG_BLE_MESH_LOW_POWER* && *CONFIG_BLE_MESH*

CONFIG_BLE_MESH_LPN_AUTO

Automatically start looking for Friend nodes once provisioned

Found in: Component config > CONFIG_BLE_MESH > CONFIG_BLE_MESH_LOW_POWER

Once provisioned, automatically enable LPN functionality and start looking for Friend nodes. If this option is disabled LPN mode needs to be manually enabled by calling bt_mesh_lpn_set(true). When an unprovisioned device is provisioned successfully and becomes a node, enabling this option will trigger the node starts to send Friend Request at a certain period until it finds a proper Friend node.

Default value:

- No (disabled) if *CONFIG_BLE_MESH_LOW_POWER* && *CONFIG_BLE_MESH*

CONFIG_BLE_MESH_LPN_AUTO_TIMEOUT

Time from last received message before going to LPN mode

Found in: Component config > CONFIG_BLE_MESH > CONFIG_BLE_MESH_LOW_POWER > CONFIG_BLE_MESH_LPN_AUTO

Time in seconds from the last received message, that the node waits out before starting to look for Friend nodes.

Range:

- from 0 to 3600 if *CONFIG_BLE_MESH_LPN_AUTO* && *CONFIG_BLE_MESH_LOW_POWER* && *CONFIG_BLE_MESH*

Default value:

- 15 if *CONFIG_BLE_MESH_LPN_AUTO* && *CONFIG_BLE_MESH_LOW_POWER* && *CONFIG_BLE_MESH*

CONFIG_BLE_MESH_LPN_RETRY_TIMEOUT

Retry timeout for Friend requests

Found in: Component config > CONFIG_BLE_MESH > CONFIG_BLE_MESH_LOW_POWER

Time in seconds between Friend Requests, if a previous Friend Request did not yield any acceptable Friend Offers.

Range:

- from 1 to 3600 if *CONFIG_BLE_MESH_LOW_POWER* && *CONFIG_BLE_MESH*

Default value:

- 6 if *CONFIG_BLE_MESH_LOW_POWER* && *CONFIG_BLE_MESH*

CONFIG_BLE_MESH_LPN_RSSI_FACTOR

RSSIFactor, used in Friend Offer Delay calculation

Found in: Component config > *CONFIG_BLE_MESH* > *CONFIG_BLE_MESH_LOW_POWER*

The contribution of the RSSI, measured by the Friend node, used in Friend Offer Delay calculations. 0 = 1, 1 = 1.5, 2 = 2, 3 = 2.5. RSSIFactor, one of the parameters carried by Friend Request sent by Low Power node, which is used to calculate the Friend Offer Delay.

Range:

- from 0 to 3 if *CONFIG_BLE_MESH_LOW_POWER* && *CONFIG_BLE_MESH*

Default value:

- 0 if *CONFIG_BLE_MESH_LOW_POWER* && *CONFIG_BLE_MESH*

CONFIG_BLE_MESH_LPN_RECV_WIN_FACTOR

ReceiveWindowFactor, used in Friend Offer Delay calculation

Found in: Component config > *CONFIG_BLE_MESH* > *CONFIG_BLE_MESH_LOW_POWER*

The contribution of the supported Receive Window used in Friend Offer Delay calculations. 0 = 1, 1 = 1.5, 2 = 2, 3 = 2.5. ReceiveWindowFactor, one of the parameters carried by Friend Request sent by Low Power node, which is used to calculate the Friend Offer Delay.

Range:

- from 0 to 3 if *CONFIG_BLE_MESH_LOW_POWER* && *CONFIG_BLE_MESH*

Default value:

- 0 if *CONFIG_BLE_MESH_LOW_POWER* && *CONFIG_BLE_MESH*

CONFIG_BLE_MESH_LPN_MIN_QUEUE_SIZE

Minimum size of the acceptable friend queue (MinQueueSizeLog)

Found in: Component config > *CONFIG_BLE_MESH* > *CONFIG_BLE_MESH_LOW_POWER*

The MinQueueSizeLog field is defined as log_2(N), where N is the minimum number of maximum size Lower Transport PDUs that the Friend node can store in its Friend Queue. As an example, MinQueueSizeLog value 1 gives N = 2, and value 7 gives N = 128.

Range:

- from 1 to 7 if *CONFIG_BLE_MESH_LOW_POWER* && *CONFIG_BLE_MESH*

Default value:

- 1 if *CONFIG_BLE_MESH_LOW_POWER* && *CONFIG_BLE_MESH*

CONFIG_BLE_MESH_LPN_RECV_DELAY

Receive delay requested by the local node

Found in: Component config > *CONFIG_BLE_MESH* > *CONFIG_BLE_MESH_LOW_POWER*

The ReceiveDelay is the time between the Low Power node sending a request and listening for a response. This delay allows the Friend node time to prepare the response. The value is in units of milliseconds.

Range:

- from 10 to 255 if *CONFIG_BLE_MESH_LOW_POWER* && *CONFIG_BLE_MESH*

Default value:

- 100 if *CONFIG_BLE_MESH_LOW_POWER* && *CONFIG_BLE_MESH*

CONFIG_BLE_MESH_LPN_POLL_TIMEOUT

The value of the PollTimeout timer

Found in: Component config > CONFIG_BLE_MESH > CONFIG_BLE_MESH_LOW_POWER

PollTimeout timer is used to measure time between two consecutive requests sent by a Low Power node. If no requests are received the Friend node before the PollTimeout timer expires, then the friendship is considered terminated. The value is in units of 100 milliseconds, so e.g. a value of 300 means 30 seconds. The smaller the value, the faster the Low Power node tries to get messages from corresponding Friend node and vice versa.

Range:
- from 10 to 244735 if *CONFIG_BLE_MESH_LOW_POWER* && *CONFIG_BLE_MESH*

Default value:
- 300 if *CONFIG_BLE_MESH_LOW_POWER* && *CONFIG_BLE_MESH*

CONFIG_BLE_MESH_LPN_INIT_POLL_TIMEOUT

The starting value of the PollTimeout timer

Found in: Component config > CONFIG_BLE_MESH > CONFIG_BLE_MESH_LOW_POWER

The initial value of the PollTimeout timer when Friendship is to be established for the first time. After this, the timeout gradually grows toward the actual PollTimeout, doubling in value for each iteration. The value is in units of 100 milliseconds, so e.g. a value of 300 means 30 seconds.

Range:
- from 10 to if *CONFIG_BLE_MESH_LOW_POWER* && *CONFIG_BLE_MESH*

Default value:
- if *CONFIG_BLE_MESH_LOW_POWER* && *CONFIG_BLE_MESH*

CONFIG_BLE_MESH_LPN_SCAN_LATENCY

Latency for enabling scanning

Found in: Component config > CONFIG_BLE_MESH > CONFIG_BLE_MESH_LOW_POWER

Latency (in milliseconds) is the time it takes to enable scanning. In practice, it means how much time in advance of the Receive Window, the request to enable scanning is made.

Range:
- from 0 to 50 if *CONFIG_BLE_MESH_LOW_POWER* && *CONFIG_BLE_MESH*

Default value:
- 10 if *CONFIG_BLE_MESH_LOW_POWER* && *CONFIG_BLE_MESH*

CONFIG_BLE_MESH_LPN_GROUPS

Number of groups the LPN can subscribe to

Found in: Component config > CONFIG_BLE_MESH > CONFIG_BLE_MESH_LOW_POWER

Maximum number of groups to which the LPN can subscribe.

Range:
- from 0 to 16384 if *CONFIG_BLE_MESH_LOW_POWER* && *CONFIG_BLE_MESH*

Default value:
- 8 if *CONFIG_BLE_MESH_LOW_POWER* && *CONFIG_BLE_MESH*

CONFIG_BLE_MESH_LPN_SUB_ALL_NODES_ADDR

Automatically subscribe all nodes address

Found in: Component config > CONFIG_BLE_MESH > CONFIG_BLE_MESH_LOW_POWER

Automatically subscribe all nodes address when friendship established.

Default value:

- No (disabled) if *CONFIG_BLE_MESH_LOW_POWER* && *CONFIG_BLE_MESH*

CONFIG_BLE_MESH_FRIEND

Support for Friend feature

Found in: Component config > CONFIG_BLE_MESH

Enable this option to be able to act as a Friend Node.

CONFIG_BLE_MESH_FRIEND_RECV_WIN

Friend Receive Window

Found in: Component config > CONFIG_BLE_MESH > CONFIG_BLE_MESH_FRIEND

Receive Window in milliseconds supported by the Friend node.

Range:

- from 1 to 255 if *CONFIG_BLE_MESH_FRIEND* && *CONFIG_BLE_MESH*

Default value:

- 255 if *CONFIG_BLE_MESH_FRIEND* && *CONFIG_BLE_MESH*

CONFIG_BLE_MESH_FRIEND_QUEUE_SIZE

Minimum number of buffers supported per Friend Queue

Found in: Component config > CONFIG_BLE_MESH > CONFIG_BLE_MESH_FRIEND

Minimum number of buffers available to be stored for each local Friend Queue. This option decides the size of each buffer which can be used by a Friend node to store messages for each Low Power node.

Range:

- from 2 to 65536 if *CONFIG_BLE_MESH_FRIEND* && *CONFIG_BLE_MESH*

Default value:

- 16 if *CONFIG_BLE_MESH_FRIEND* && *CONFIG_BLE_MESH*

CONFIG_BLE_MESH_FRIEND_SUB_LIST_SIZE

Friend Subscription List Size

Found in: Component config > CONFIG_BLE_MESH > CONFIG_BLE_MESH_FRIEND

Size of the Subscription List that can be supported by a Friend node for a Low Power node. And Low Power node can send Friend Subscription List Add or Friend Subscription List Remove messages to the Friend node to add or remove subscription addresses.

Range:

- from 0 to 1023 if *CONFIG_BLE_MESH_FRIEND* && *CONFIG_BLE_MESH*

Default value:

- 3 if *CONFIG_BLE_MESH_FRIEND* && *CONFIG_BLE_MESH*

CONFIG_BLE_MESH_FRIEND_LPN_COUNT

Number of supported LPN nodes

Found in: Component config > CONFIG_BLE_MESH > CONFIG_BLE_MESH_FRIEND

Number of Low Power Nodes with which a Friend can have Friendship simultaneously. A Friend node can have friendship with multiple Low Power nodes at the same time, while a Low Power node can only establish friendship with only one Friend node at the same time.

Range:
- from 1 to 1000 if *CONFIG_BLE_MESH_FRIEND* && *CONFIG_BLE_MESH*

Default value:
- 2 if *CONFIG_BLE_MESH_FRIEND* && *CONFIG_BLE_MESH*

CONFIG_BLE_MESH_FRIEND_SEG_RX

Number of incomplete segment lists per LPN

Found in: Component config > CONFIG_BLE_MESH > CONFIG_BLE_MESH_FRIEND

Number of incomplete segment lists tracked for each Friends' LPN. In other words, this determines from how many elements can segmented messages destined for the Friend queue be received simultaneously.

Range:
- from 1 to 1000 if *CONFIG_BLE_MESH_FRIEND* && *CONFIG_BLE_MESH*

Default value:
- 1 if *CONFIG_BLE_MESH_FRIEND* && *CONFIG_BLE_MESH*

CONFIG_BLE_MESH_NO_LOG

Disable BLE Mesh debug logs (minimize bin size)

Found in: Component config > CONFIG_BLE_MESH

Select this to save the BLE Mesh related rodata code size. Enabling this option will disable the output of BLE Mesh debug log.

Default value:
- No (disabled) if *CONFIG_BLE_MESH* && *CONFIG_BLE_MESH*

BLE Mesh STACK DEBUG LOG LEVEL Contains:

- *CONFIG_BLE_MESH_STACK_TRACE_LEVEL*

CONFIG_BLE_MESH_STACK_TRACE_LEVEL

BLE_MESH_STACK

Found in: Component config > CONFIG_BLE_MESH > BLE Mesh STACK DEBUG LOG LEVEL

Define BLE Mesh trace level for BLE Mesh stack.

Available options:
- NONE (BLE_MESH_TRACE_LEVEL_NONE)
- ERROR (BLE_MESH_TRACE_LEVEL_ERROR)
- WARNING (BLE_MESH_TRACE_LEVEL_WARNING)
- INFO (BLE_MESH_TRACE_LEVEL_INFO)
- DEBUG (BLE_MESH_TRACE_LEVEL_DEBUG)
- VERBOSE (BLE_MESH_TRACE_LEVEL_VERBOSE)

BLE Mesh NET BUF DEBUG LOG LEVEL Contains:

- *CONFIG_BLE_MESH_NET_BUF_TRACE_LEVEL*

CONFIG_BLE_MESH_NET_BUF_TRACE_LEVEL

BLE_MESH_NET_BUF

Found in: Component config > CONFIG_BLE_MESH > BLE Mesh NET BUF DEBUG LOG LEVEL

Define BLE Mesh trace level for BLE Mesh net buffer.

Available options:

- NONE (BLE_MESH_NET_BUF_TRACE_LEVEL_NONE)
- ERROR (BLE_MESH_NET_BUF_TRACE_LEVEL_ERROR)
- WARNING (BLE_MESH_NET_BUF_TRACE_LEVEL_WARNING)
- INFO (BLE_MESH_NET_BUF_TRACE_LEVEL_INFO)
- DEBUG (BLE_MESH_NET_BUF_TRACE_LEVEL_DEBUG)
- VERBOSE (BLE_MESH_NET_BUF_TRACE_LEVEL_VERBOSE)

CONFIG_BLE_MESH_CLIENT_MSG_TIMEOUT

Timeout(ms) for client message response

Found in: Component config > CONFIG_BLE_MESH

Timeout value used by the node to get response of the acknowledged message which is sent by the client model. This value indicates the maximum time that a client model waits for the response of the sent acknowledged messages. If a client model uses 0 as the timeout value when sending acknowledged messages, then the default value will be used which is four seconds.

Range:

- from 100 to 1200000 if *CONFIG_BLE_MESH*

Default value:

- 4000 if *CONFIG_BLE_MESH*

Support for BLE Mesh Foundation models

Contains:

- *CONFIG_BLE_MESH_CFG_CLI*
- *CONFIG_BLE_MESH_HEALTH_CLI*
- *CONFIG_BLE_MESH_HEALTH_SRV*

CONFIG_BLE_MESH_CFG_CLI

Configuration Client model

Found in: Component config > CONFIG_BLE_MESH > Support for BLE Mesh Foundation models

Enable support for Configuration Client model.

CONFIG_BLE_MESH_HEALTH_CLI

Health Client model

Found in: Component config > CONFIG_BLE_MESH > Support for BLE Mesh Foundation models

Enable support for Health Client model.

CONFIG_BLE_MESH_HEALTH_SRV

Health Server model

Found in: Component config > CONFIG_BLE_MESH > Support for BLE Mesh Foundation models

Enable support for Health Server model.

Default value:

- Yes (enabled) if *CONFIG_BLE_MESH*

Support for BLE Mesh Client/Server models Contains:

- *CONFIG_BLE_MESH_GENERIC_BATTERY_CLI*
- *CONFIG_BLE_MESH_GENERIC_DEF_TRANS_TIME_CLI*
- *CONFIG_BLE_MESH_GENERIC_LEVEL_CLI*
- *CONFIG_BLE_MESH_GENERIC_LOCATION_CLI*
- *CONFIG_BLE_MESH_GENERIC_ONOFF_CLI*
- *CONFIG_BLE_MESH_GENERIC_POWER_LEVEL_CLI*
- *CONFIG_BLE_MESH_GENERIC_POWER_ONOFF_CLI*
- *CONFIG_BLE_MESH_GENERIC_PROPERTY_CLI*
- *CONFIG_BLE_MESH_GENERIC_SERVER*
- *CONFIG_BLE_MESH_LIGHT_CTL_CLI*
- *CONFIG_BLE_MESH_LIGHT_HSL_CLI*
- *CONFIG_BLE_MESH_LIGHT_LC_CLI*
- *CONFIG_BLE_MESH_LIGHT_LIGHTNESS_CLI*
- *CONFIG_BLE_MESH_LIGHT_XYL_CLI*
- *CONFIG_BLE_MESH_LIGHTING_SERVER*
- *CONFIG_BLE_MESH_SCENE_CLI*
- *CONFIG_BLE_MESH_SCHEDULER_CLI*
- *CONFIG_BLE_MESH_SENSOR_CLI*
- *CONFIG_BLE_MESH_SENSOR_SERVER*
- *CONFIG_BLE_MESH_TIME_SCENE_SERVER*
- *CONFIG_BLE_MESH_TIME_CLI*

CONFIG_BLE_MESH_GENERIC_ONOFF_CLI

Generic OnOff Client model

Found in: Component config > CONFIG_BLE_MESH > Support for BLE Mesh Client/Server models

Enable support for Generic OnOff Client model.

CONFIG_BLE_MESH_GENERIC_LEVEL_CLI

Generic Level Client model

Found in: Component config > CONFIG_BLE_MESH > Support for BLE Mesh Client/Server models

Enable support for Generic Level Client model.

CONFIG_BLE_MESH_GENERIC_DEF_TRANS_TIME_CLI

Generic Default Transition Time Client model

Found in: Component config > CONFIG_BLE_MESH > Support for BLE Mesh Client/Server models

Enable support for Generic Default Transition Time Client model.

CONFIG_BLE_MESH_GENERIC_POWER_ONOFF_CLI

Generic Power OnOff Client model

Found in: Component config > CONFIG_BLE_MESH > Support for BLE Mesh Client/Server models

Enable support for Generic Power OnOff Client model.

CONFIG_BLE_MESH_GENERIC_POWER_LEVEL_CLI

Generic Power Level Client model

Found in: Component config > CONFIG_BLE_MESH > Support for BLE Mesh Client/Server models

Enable support for Generic Power Level Client model.

CONFIG_BLE_MESH_GENERIC_BATTERY_CLI

Generic Battery Client model

Found in: Component config > CONFIG_BLE_MESH > Support for BLE Mesh Client/Server models

Enable support for Generic Battery Client model.

CONFIG_BLE_MESH_GENERIC_LOCATION_CLI

Generic Location Client model

Found in: Component config > CONFIG_BLE_MESH > Support for BLE Mesh Client/Server models

Enable support for Generic Location Client model.

CONFIG_BLE_MESH_GENERIC_PROPERTY_CLI

Generic Property Client model

Found in: Component config > CONFIG_BLE_MESH > Support for BLE Mesh Client/Server models

Enable support for Generic Property Client model.

CONFIG_BLE_MESH_SENSOR_CLI

Sensor Client model

Found in: Component config > CONFIG_BLE_MESH > Support for BLE Mesh Client/Server models

Enable support for Sensor Client model.

CONFIG_BLE_MESH_TIME_CLI

Time Client model

Found in: Component config > CONFIG_BLE_MESH > Support for BLE Mesh Client/Server models

Enable support for Time Client model.

CONFIG_BLE_MESH_SCENE_CLI

Scene Client model

Found in: Component config > CONFIG_BLE_MESH > Support for BLE Mesh Client/Server models

Enable support for Scene Client model.

CONFIG_BLE_MESH_SCHEDULER_CLI

Scheduler Client model

Found in: Component config > CONFIG_BLE_MESH > Support for BLE Mesh Client/Server models

Enable support for Scheduler Client model.

CONFIG_BLE_MESH_LIGHT_LIGHTNESS_CLI

Light Lightness Client model

Found in: Component config > CONFIG_BLE_MESH > Support for BLE Mesh Client/Server models

Enable support for Light Lightness Client model.

CONFIG_BLE_MESH_LIGHT_CTL_CLI

Light CTL Client model

Found in: Component config > CONFIG_BLE_MESH > Support for BLE Mesh Client/Server models

Enable support for Light CTL Client model.

CONFIG_BLE_MESH_LIGHT_HSL_CLI

Light HSL Client model

Found in: Component config > CONFIG_BLE_MESH > Support for BLE Mesh Client/Server models

Enable support for Light HSL Client model.

CONFIG_BLE_MESH_LIGHT_XYL_CLI

Light XYL Client model

Found in: Component config > CONFIG_BLE_MESH > Support for BLE Mesh Client/Server models

Enable support for Light XYL Client model.

CONFIG_BLE_MESH_LIGHT_LC_CLI

Light LC Client model

Found in: Component config > CONFIG_BLE_MESH > Support for BLE Mesh Client/Server models

Enable support for Light LC Client model.

CONFIG_BLE_MESH_GENERIC_SERVER

Generic server models

Found in: Component config > CONFIG_BLE_MESH > Support for BLE Mesh Client/Server models

Enable support for Generic server models.

Default value:

- Yes (enabled) if *CONFIG_BLE_MESH*

CONFIG_BLE_MESH_SENSOR_SERVER

Sensor server models

Found in: Component config > CONFIG_BLE_MESH > Support for BLE Mesh Client/Server models

Enable support for Sensor server models.

Default value:

- Yes (enabled) if *CONFIG_BLE_MESH*

CONFIG_BLE_MESH_TIME_SCENE_SERVER

Time and Scenes server models

Found in: Component config > CONFIG_BLE_MESH > Support for BLE Mesh Client/Server models

Enable support for Time and Scenes server models.

Default value:

- Yes (enabled) if *CONFIG_BLE_MESH*

CONFIG_BLE_MESH_LIGHTING_SERVER

Lighting server models

Found in: Component config > CONFIG_BLE_MESH > Support for BLE Mesh Client/Server models

Enable support for Lighting server models.

Default value:

- Yes (enabled) if *CONFIG_BLE_MESH*

CONFIG_BLE_MESH_IV_UPDATE_TEST

Test the IV Update Procedure

Found in: Component config > CONFIG_BLE_MESH

This option removes the 96 hour limit of the IV Update Procedure and lets the state to be changed at any time. If IV Update test mode is going to be used, this option should be enabled.

Default value:

- No (disabled) if *CONFIG_BLE_MESH*

BLE Mesh specific test option

Contains:

- *CONFIG_BLE_MESH_DEBUG*
- *CONFIG_BLE_MESH_SHELL*
- *CONFIG_BLE_MESH_SELF_TEST*

CONFIG_BLE_MESH_SELF_TEST

Perform BLE Mesh self-tests

Found in: Component config > CONFIG_BLE_MESH > BLE Mesh specific test option

This option adds extra self-tests which are run every time BLE Mesh networking is initialized.

Default value:

- No (disabled) if *CONFIG_BLE_MESH*

CONFIG_BLE_MESH_TEST_AUTO_ENTER_NETWORK

Unprovisioned device enters mesh network automatically

Found in: Component config > CONFIG_BLE_MESH > BLE Mesh specific test option > CONFIG_BLE_MESH_SELF_TEST

With this option enabled, an unprovisioned device can automatically enters mesh network using a specific test function without the pro- visioning procedure. And on the Provisioner side, a test function needs to be invoked to add the node information into the mesh stack.

Default value:

- Yes (enabled) if *CONFIG_BLE_MESH_SELF_TEST* && *CONFIG_BLE_MESH*

CONFIG_BLE_MESH_TEST_USE_WHITE_LIST

Use white list to filter mesh advertising packets

Found in: Component config > CONFIG_BLE_MESH > BLE Mesh specific test option > CONFIG_BLE_MESH_SELF_TEST

With this option enabled, users can use white list to filter mesh advertising packets while scanning.

Default value:

- No (disabled) if *CONFIG_BLE_MESH_SELF_TEST* && *CONFIG_BLE_MESH*

CONFIG_BLE_MESH_SHELL

Enable BLE Mesh shell

Found in: Component config > CONFIG_BLE_MESH > BLE Mesh specific test option

Activate shell module that provides BLE Mesh commands to the console.

Default value:

- No (disabled) if *CONFIG_BLE_MESH*

CONFIG_BLE_MESH_DEBUG

Enable BLE Mesh debug logs

Found in: Component config > CONFIG_BLE_MESH > BLE Mesh specific test option

Enable debug logs for the BLE Mesh functionality.

Default value:

- No (disabled) if *CONFIG_BLE_MESH*

CONFIG_BLE_MESH_DEBUG_NET

Network layer debug

Found in: Component config > CONFIG_BLE_MESH > BLE Mesh specific test option > CONFIG_BLE_MESH_DEBUG

Enable Network layer debug logs for the BLE Mesh functionality.

CONFIG_BLE_MESH_DEBUG_TRANS

Transport layer debug

Found in: Component config > CONFIG_BLE_MESH > BLE Mesh specific test option > CONFIG_BLE_MESH_DEBUG

Enable Transport layer debug logs for the BLE Mesh functionality.

CONFIG_BLE_MESH_DEBUG_BEACON

Beacon debug

Found in: Component config > CONFIG_BLE_MESH > BLE Mesh specific test option > CONFIG_BLE_MESH_DEBUG

Enable Beacon-related debug logs for the BLE Mesh functionality.

CONFIG_BLE_MESH_DEBUG_CRYPTO

Crypto debug

Found in: Component config > CONFIG_BLE_MESH > BLE Mesh specific test option > CONFIG_BLE_MESH_DEBUG

Enable cryptographic debug logs for the BLE Mesh functionality.

CONFIG_BLE_MESH_DEBUG_PROV

Provisioning debug

Found in: Component config > CONFIG_BLE_MESH > BLE Mesh specific test option > CONFIG_BLE_MESH_DEBUG

Enable Provisioning debug logs for the BLE Mesh functionality.

CONFIG_BLE_MESH_DEBUG_ACCESS

Access layer debug

Found in: Component config > CONFIG_BLE_MESH > BLE Mesh specific test option > CONFIG_BLE_MESH_DEBUG

Enable Access layer debug logs for the BLE Mesh functionality.

CONFIG_BLE_MESH_DEBUG_MODEL

Foundation model debug

Found in: Component config > CONFIG_BLE_MESH > BLE Mesh specific test option > CONFIG_BLE_MESH_DEBUG

Enable Foundation Models debug logs for the BLE Mesh functionality.

CONFIG_BLE_MESH_DEBUG_ADV

Advertising debug

Found in: Component config > CONFIG_BLE_MESH > BLE Mesh specific test option > CONFIG_BLE_MESH_DEBUG

Enable advertising debug logs for the BLE Mesh functionality.

CONFIG_BLE_MESH_DEBUG_LOW_POWER

Low Power debug

Found in: Component config > CONFIG_BLE_MESH > BLE Mesh specific test option > CONFIG_BLE_MESH_DEBUG

Enable Low Power debug logs for the BLE Mesh functionality.

CONFIG_BLE_MESH_DEBUG_FRIEND

Friend debug

Found in: Component config > CONFIG_BLE_MESH > BLE Mesh specific test option > CONFIG_BLE_MESH_DEBUG

Enable Friend debug logs for the BLE Mesh functionality.

CONFIG_BLE_MESH_DEBUG_PROXY

Proxy debug

Found in: Component config > CONFIG_BLE_MESH > BLE Mesh specific test option > CONFIG_BLE_MESH_DEBUG

Enable Proxy protocol debug logs for the BLE Mesh functionality.

CoAP Configuration Contains:

- *CONFIG_COAP_MBEDTLS_ENCRYPTION_MODE*
- *CONFIG_COAP_MBEDTLS_DEBUG*

CONFIG_COAP_MBEDTLS_ENCRYPTION_MODE

CoAP Encryption method

Found in: Component config > CoAP Configuration

If the CoAP information is to be encrypted, the encryption environment can be set up in one of two ways (default being Pre-Shared key mode)

- Encrypt using defined Pre-Shared Keys (PSK if uri includes coaps://)
- Encrypt using defined Public Key Infrastructure (PKI if uri includes coaps://)

Available options:

- Pre-Shared Keys (COAP_MBEDTLS_PSK)
- PKI Certificates (COAP_MBEDTLS_PKI)

CONFIG_COAP_MBEDTLS_DEBUG

Enable CoAP debugging

Found in: Component config > CoAP Configuration

Enable CoAP debugging functions at compile time for the example code.

If this option is enabled, call coap_set_log_level() at runtime in order to enable CoAP debug output via the ESP log mechanism.

Default value:

- No (disabled)

CONFIG_COAP_MBEDTLS_DEBUG_LEVEL

Set CoAP debugging level

Found in: Component config > CoAP Configuration > CONFIG_COAP_MBEDTLS_DEBUG

Set CoAP debugging level

Available options:

- Emergency (COAP_LOG_EMERG)
- Alert (COAP_LOG_ALERT)
- Critical (COAP_LOG_CRIT)
- Error (COAP_LOG_ERROR)
- Warning (COAP_LOG_WARNING)
- Notice (COAP_LOG_NOTICE)
- Info (COAP_LOG_INFO)
- Debug (COAP_LOG_DEBUG)
- mbedTLS (COAP_LOG_MBEDTLS)

Driver configurations Contains:

- *ADC configuration*
- *GDMA Configuration*
- *GPIO Configuration*
- *MCPWM configuration*
- *RTCIO configuration*
- *SPI configuration*
- *TWAI configuration*

- *UART configuration*

ADC configuration Contains:

- *CONFIG_ADC_DISABLE_DAC*
- *CONFIG_ADC_FORCE_XPD_FSM*

CONFIG_ADC_FORCE_XPD_FSM

Use the FSM to control ADC power

Found in: Component config > Driver configurations > ADC configuration

ADC power can be controlled by the FSM instead of software. This allows the ADC to be shut off when it is not working leading to lower power consumption. However using the FSM control ADC power will increase the noise of ADC.

Default value:

- No (disabled)

CONFIG_ADC_DISABLE_DAC

Disable DAC when ADC2 is used on GPIO 25 and 26

Found in: Component config > Driver configurations > ADC configuration

If this is set, the ADC2 driver will disable the output of the DAC corresponding to the specified channel. This is the default value.

For testing, disable this option so that we can measure the output of DAC by internal ADC.

Default value:

- Yes (enabled)

MCPWM configuration Contains:

- *CONFIG_MCPWM_ISR_IN_IRAM*

CONFIG_MCPWM_ISR_IN_IRAM

Place MCPWM ISR function into IRAM

Found in: Component config > Driver configurations > MCPWM configuration

If this option is not selected, the MCPWM interrupt will be deferred when the Cache is in a disabled state (e.g. Flash write/erase operation).

Note that if this option is selected, all user registered ISR callbacks should never try to use cache as well. (with IRAM_ATTR)

Default value:

- No (disabled)

SPI configuration Contains:

- *CONFIG_SPI_MASTER_ISR_IN_IRAM*
- *CONFIG_SPI_SLAVE_ISR_IN_IRAM*
- *CONFIG_SPI_MASTER_IN_IRAM*
- *CONFIG_SPI_SLAVE_IN_IRAM*

CONFIG_SPI_MASTER_IN_IRAM

Place transmitting functions of SPI master into IRAM

Found in: Component config > Driver configurations > SPI configuration

Normally only the ISR of SPI master is placed in the IRAM, so that it can work without the flash when interrupt is triggered. For other functions, there's some possibility that the flash cache miss when running inside and out of SPI functions, which may increase the interval of SPI transactions. Enable this to put `queue\_trans`, `get\_trans\_result` and `transmit` functions into the IRAM to avoid possible cache miss.

During unit test, this is enabled to measure the ideal case of api.

Default value:

- No (disabled)

CONFIG_SPI_MASTER_ISR_IN_IRAM

Place SPI master ISR function into IRAM

Found in: Component config > Driver configurations > SPI configuration

Place the SPI master ISR in to IRAM to avoid possible cache miss.

Also you can forbid the ISR being disabled during flash writing access, by add ESP_INTR_FLAG_IRAM when initializing the driver.

Default value:

- Yes (enabled)

CONFIG_SPI_SLAVE_IN_IRAM

Place transmitting functions of SPI slave into IRAM

Found in: Component config > Driver configurations > SPI configuration

Normally only the ISR of SPI slave is placed in the IRAM, so that it can work without the flash when interrupt is triggered. For other functions, there's some possibility that the flash cache miss when running inside and out of SPI functions, which may increase the interval of SPI transactions. Enable this to put `queue\_trans`, `get\_trans\_result` and `transmit` functions into the IRAM to avoid possible cache miss.

Default value:

- No (disabled)

CONFIG_SPI_SLAVE_ISR_IN_IRAM

Place SPI slave ISR function into IRAM

Found in: Component config > Driver configurations > SPI configuration

Place the SPI slave ISR in to IRAM to avoid possible cache miss.

Also you can forbid the ISR being disabled during flash writing access, by add ESP_INTR_FLAG_IRAM when initializing the driver.

Default value:

- Yes (enabled)

TWAI configuration Contains:

- *CONFIG_TWAI_ERRATA_FIX_RX_FRAME_INVALID*
- *CONFIG_TWAI_ERRATA_FIX_BUS_OFF_REC*
- *CONFIG_TWAI_ERRATA_FIX_RX_FIFO_CORRUPT*

- *CONFIG_TWAI_ERRATA_FIX_TX_INTR_LOST*
- *CONFIG_TWAI_ISR_IN_IRAM*

CONFIG_TWAI_ISR_IN_IRAM

Place TWAI ISR function into IRAM

Found in: Component config > Driver configurations > TWAI configuration

Place the TWAI ISR in to IRAM. This will allow the ISR to avoid cache misses, and also be able to run whilst the cache is disabled (such as when writing to SPI Flash). Note that if this option is enabled: - Users should also set the ESP_INTR_FLAG_IRAM in the driver configuration structure when installing the driver (see docs for specifics). - Alert logging (i.e., setting of the TWAI_ALERT_AND_LOG flag) will have no effect.

Default value:

- No (disabled)

CONFIG_TWAI_ERRATA_FIX_BUS_OFF_REC

Add SW workaround for REC change during bus-off

Found in: Component config > Driver configurations > TWAI configuration

When the bus-off condition is reached, the REC should be reset to 0 and frozen (via LOM) by the driver's ISR. However on the ESP32, there is an edge case where the REC will increase before the driver's ISR can respond in time (e.g., due to the rapid occurrence of bus errors), thus causing the REC to be non-zero after bus-off. A non-zero REC can prevent bus-off recovery as the bus-off recovery condition is that both TEC and REC become 0. Enabling this option will add a workaround in the driver to forcibly reset REC to zero on reaching bus-off.

Default value:

- No (disabled)

CONFIG_TWAI_ERRATA_FIX_TX_INTR_LOST

Add SW workaround for TX interrupt lost errata

Found in: Component config > Driver configurations > TWAI configuration

On the ESP32, when a transmit interrupt occurs, and interrupt register is read on the same APB clock cycle, the transmit interrupt could be lost. Enabling this option will add a workaround that checks the transmit buffer status bit to recover any lost transmit interrupt.

Default value:

- No (disabled)

CONFIG_TWAI_ERRATA_FIX_RX_FRAME_INVALID

Add SW workaround for invalid RX frame errata

Found in: Component config > Driver configurations > TWAI configuration

On the ESP32, when receiving a data or remote frame, if a bus error occurs in the data or CRC field, the data of the next received frame could be invalid. Enabling this option will add a workaround that will reset the peripheral on detection of this errata condition. Note that if a frame is transmitted on the bus whilst the reset is ongoing, the message will not be receive by the peripheral sent on the bus during the reset, the message will be lost.

Default value:

- No (disabled)

CONFIG_TWAI_ERRATA_FIX_RX_FIFO_CORRUPT

Add SW workaround for RX FIFO corruption errata

Found in: Component config > Driver configurations > TWAI configuration

On the ESP32, when the RX FIFO overruns and the RX message counter maxes out at 64 messages, the entire RX FIFO is no longer recoverable. Enabling this option will add a workaround that resets the peripheral on detection of this errata condition. Note that if a frame is being sent on the bus during the reset bus during the reset, the message will be lost.

Default value:

- No (disabled)

UART configuration Contains:

- *CONFIG_UART_ISR_IN_IRAM*

CONFIG_UART_ISR_IN_IRAM

Place UART ISR function into IRAM

Found in: Component config > Driver configurations > UART configuration

If this option is not selected, UART interrupt will be disabled for a long time and may cause data lost when doing spi flash operation.

Default value:

- No (disabled) if *CONFIG_RINGBUF_PLACE_ISR_FUNCTIONS_INTO_FLASH*

RTCIO configuration Contains:

- *CONFIG_RTCIO_SUPPORT_RTC_GPIO_DESC*

CONFIG_RTCIO_SUPPORT_RTC_GPIO_DESC

Support array *rtc_gpio_desc* for ESP32

Found in: Component config > Driver configurations > RTCIO configuration

The the array *rtc_gpio_desc* will don't compile by default. If this option is selected, the array *rtc_gpio_desc* can be compile. If user use this array, please enable this configuration.

Default value:

- No (disabled)

GPIO Configuration Contains:

- *CONFIG_GPIO_ESP32_SUPPORT_SWITCH_SLP_PULL*

CONFIG_GPIO_ESP32_SUPPORT_SWITCH_SLP_PULL

Support light sleep GPIO pullup/pulldown configuration for ESP32

Found in: Component config > Driver configurations > GPIO Configuration

This option is intended to fix the bug that ESP32 is not able to switch to configured pullup/pulldown mode in sleep. If this option is selected, chip will automatically emulate the behaviour of switching, and about 450B of source codes would be placed into IRAM.

GDMA Configuration Contains:

- *CONFIG_GDMA_ISR_IRAM_SAFE*
- *CONFIG_GDMA_CTRL_FUNC_IN_IRAM*

CONFIG_GDMA_CTRL_FUNC_IN_IRAM

Place GDMA control functions into IRAM

Found in: Component config > Driver configurations > GDMA Configuration

Place GDMA control functions (like start/stop/append/reset) into IRAM, so that these functions can be IRAM-safe and able to be called in the other IRAM interrupt context. Enabling this option can improve driver performance as well.

Default value:

- No (disabled)

CONFIG_GDMA_ISR_IRAM_SAFE

GDMA ISR IRAM-Safe

Found in: Component config > Driver configurations > GDMA Configuration

This will ensure the GDMA interrupt handler is IRAM-Safe, allow to avoid flash cache misses, and also be able to run whilst the cache is disabled. (e.g. SPI Flash write).

Default value:

- No (disabled)

eFuse Bit Manager Contains:

- *CONFIG_EFUSE_CODE_SCHEME_SELECTOR*
- *CONFIG_EFUSE_VIRTUAL*
- *CONFIG_EFUSE_CUSTOM_TABLE*

CONFIG_EFUSE_CUSTOM_TABLE

Use custom eFuse table

Found in: Component config > eFuse Bit Manager

Allows to generate a structure for eFuse from the CSV file.

Default value:

- No (disabled)

CONFIG_EFUSE_CUSTOM_TABLE_FILENAME

Custom eFuse CSV file

Found in: Component config > eFuse Bit Manager > CONFIG_EFUSE_CUSTOM_TABLE

Name of the custom eFuse CSV filename. This path is evaluated relative to the project root directory.

Default value:

- "main/esp_efuse_custom_table.csv" if *CONFIG_EFUSE_CUSTOM_TABLE*

CONFIG_EFUSE_VIRTUAL

Simulate eFuse operations in RAM

Found in: Component config > eFuse Bit Manager

If "n" - No virtual mode. All eFuse operations are real and use eFuse registers. If "y" - The virtual mode is enabled and all eFuse operations (read and write) are redirected to RAM instead of eFuse registers, all permanent changes (via eFuse) are disabled. Log output will state changes that would be applied, but they will not be.

During startup, the eFuses are copied into RAM. This mode is useful for fast tests.

Default value:

- No (disabled)

CONFIG_EFUSE_VIRTUAL_KEEP_IN_FLASH

Keep eFuses in flash

Found in: Component config > eFuse Bit Manager > CONFIG_EFUSE_VIRTUAL

In addition to the "Simulate eFuse operations in RAM" option, this option just adds a feature to keep eFuses after reboots in flash memory. To use this mode the partition_table should have the *efuse* partition. partition.csv: "efuse_em, data, efuse, , 0x2000,"

During startup, the eFuses are copied from flash or, in case if flash is empty, from real eFuse to RAM and then update flash. This mode is useful when need to keep changes after reboot (testing secure_boot and flash_encryption).

CONFIG_EFUSE_CODE_SCHEME_SELECTOR

Coding Scheme Compatibility

Found in: Component config > eFuse Bit Manager

Selector eFuse code scheme.

Available options:

- None Only (EFUSE_CODE_SCHEME_COMPAT_NONE)
- 3/4 and None (EFUSE_CODE_SCHEME_COMPAT_3_4)
- Repeat, 3/4 and None (common table does not support it) (EFUSE_CODE_SCHEME_COMPAT_REPEAT)

ESP-TLS Contains:

- *CONFIG_ESP_TLS_INSECURE*
- *CONFIG_ESP_TLS_LIBRARY_CHOOSE*
- *CONFIG_ESP_TLS_CLIENT_SESSION_TICKETS*
- *CONFIG_ESP_DEBUG_WOLFSSL*
- *CONFIG_ESP_TLS_SERVER*
- *CONFIG_ESP_TLS_PSK_VERIFICATION*
- *CONFIG_ESP_WOLFSSL_SMALL_CERT_VERIFY*
- *CONFIG_ESP_TLS_USE_SECURE_ELEMENT*

CONFIG_ESP_TLS_LIBRARY_CHOOSE

Choose SSL/TLS library for ESP-TLS (See help for more Info)

Found in: Component config > ESP-TLS

The ESP-TLS APIs support multiple backend TLS libraries. Currently mbedTLS and WolfSSL are supported. Different TLS libraries may support different features and have different resource usage. Consult the ESP-TLS documentation in ESP-IDF Programming guide for more details.

Available options:
- mbedTLS (ESP_TLS_USING_MBEDTLS)
- wolfSSL (License info in wolfSSL directory README) (ESP_TLS_USING_WOLFSSL)

CONFIG_ESP_TLS_USE_SECURE_ELEMENT

Use Secure Element (ATECC608A) with ESP-TLS

Found in: Component config > ESP-TLS

Enable use of Secure Element for ESP-TLS, this enables internal support for ATECC608A peripheral on ESPWROOM32SE, which can be used for TLS connection.

CONFIG_ESP_TLS_CLIENT_SESSION_TICKETS

Enable client session tickets

Found in: Component config > ESP-TLS

Enable session ticket support as specified in RFC5077.

CONFIG_ESP_TLS_SERVER

Enable ESP-TLS Server

Found in: Component config > ESP-TLS

Enable support for creating server side SSL/TLS session, available for mbedTLS as well as wolfSSL TLS library.

CONFIG_ESP_TLS_SERVER_SESSION_TICKETS

Enable server session tickets

Found in: Component config > ESP-TLS > CONFIG_ESP_TLS_SERVER

Enable session ticket support as specified in RFC5077

CONFIG_ESP_TLS_SERVER_SESSION_TICKET_TIMEOUT

Server session ticket timeout in seconds

Found in: Component config > ESP-TLS > CONFIG_ESP_TLS_SERVER > CONFIG_ESP_TLS_SERVER_SESSION_TICKETS

Sets the session ticket timeout used in the tls server.

Default value:
- 86400 if *CONFIG_ESP_TLS_SERVER_SESSION_TICKETS*

CONFIG_ESP_TLS_SERVER_MIN_AUTH_MODE_OPTIONAL

ESP-TLS Server: Set minimum Certificate Verification mode to Optional

Found in: Component config > ESP-TLS > CONFIG_ESP_TLS_SERVER

When this option is enabled, the peer (here, the client) certificate is checked by the server, however the handshake continues even if verification failed. By default, the peer certificate is not checked and ignored by the server.

mbedtls_ssl_get_verify_result() can be called after the handshake is complete to retrieve status of verification.

CONFIG_ESP_TLS_PSK_VERIFICATION

Enable PSK verification

Found in: Component config > ESP-TLS

Enable support for pre shared key ciphers, supported for both mbedTLS as well as wolfSSL TLS library.

CONFIG_ESP_TLS_INSECURE

Allow potentially insecure options

Found in: Component config > ESP-TLS

You can enable some potentially insecure options. These options should only be used for testing pusposes. Only enable these options if you are very sure.

CONFIG_ESP_TLS_SKIP_SERVER_CERT_VERIFY

Skip server certificate verification by default (WARNING: ONLY FOR TESTING PURPOSE, READ HELP)

Found in: Component config > ESP-TLS > CONFIG_ESP_TLS_INSECURE

After enabling this option the esp-tls client will skip the server certificate verification by default. Note that this option will only modify the default behaviour of esp-tls client regarding server cert verification. The default behaviour should only be applicable when no other option regarding the server cert verification is opted in the esp-tls config (e.g. crt_bundle_attach, use_global_ca_store etc.). WARNING : Enabling this option comes with a potential risk of establishing a TLS connection with a server which has a fake identity, provided that the server certificate is not provided either through API or other mechanism like ca_store etc.

CONFIG_ESP_WOLFSSL_SMALL_CERT_VERIFY

Enable SMALL_CERT_VERIFY

Found in: Component config > ESP-TLS

Enables server verification with Intermediate CA cert, does not authenticate full chain of trust upto the root CA cert (After Enabling this option client only needs to have Intermediate CA certificate of the server to authenticate server, root CA cert is not necessary).

Default value:

- Yes (enabled) if ESP_TLS_USING_WOLFSSL

CONFIG_ESP_DEBUG_WOLFSSL

Enable debug logs for wolfSSL

Found in: Component config > ESP-TLS

Enable detailed debug prints for wolfSSL SSL library.

ESP32-specific

Contains:

- *CONFIG_ESP32_RTC_EXT_CRYST_ADDIT_CURRENT_METHOD*
- *CONFIG_ESP32_COMPATIBLE_PRE_V3_1_BOOTLOADERS*
- *CONFIG_ESP32_COMPATIBLE_PRE_V2_1_BOOTLOADERS*
- *CONFIG_ESP32_DEFAULT_CPU_FREQ_MHZ*
- *CONFIG_ESP32_DPORT_DIS_INTERRUPT_LVL*
- *CONFIG_ESP32_IRAM_AS_8BIT_ACCESSIBLE_MEMORY*
- *CONFIG_ESP32_ULP_COPROC_ENABLED*
- *CONFIG_ESP32_DEEP_SLEEP_WAKEUP_DELAY*

- *CONFIG_ESP32_BROWNOUT_DET*
- *CONFIG_ESP32_XTAL_FREQ_SEL*
- *CONFIG_ESP32_DEBUG_OCDAWARE*
- *CONFIG_ESP32_REV_MIN*
- *CONFIG_ESP32_NO_BLOBS*
- *CONFIG_ESP32_RTC_XTAL_CAL_RETRY*
- *CONFIG_ESP32_RTC_CLK_CAL_CYCLES*
- *CONFIG_ESP32_DISABLE_BASIC_ROM_CONSOLE*
- *CONFIG_ESP32_RTCDATA_IN_FAST_MEM*
- *CONFIG_ESP32_RTC_CLK_SRC*
- *CONFIG_ESP32_SPIRAM_SUPPORT*
- *CONFIG_ESP32_TIME_SYSCALL*
- *CONFIG_ESP32_USE_FIXED_STATIC_RAM_SIZE*
- *CONFIG_ESP32_TRAX*

CONFIG_ESP32_REV_MIN

Minimum Supported ESP32 Revision

Found in: Component config > ESP32-specific

Minimum revision that ESP-IDF would support. ESP-IDF performs different strategy on different esp32 revision.

Available options:

- Rev 0 (ESP32_REV_MIN_0)
- Rev 1 (ESP32_REV_MIN_1)
- Rev 2 (ESP32_REV_MIN_2)
- Rev 3 (ESP32_REV_MIN_3)

CONFIG_ESP32_DEFAULT_CPU_FREQ_MHZ

CPU frequency

Found in: Component config > ESP32-specific

CPU frequency to be set on application startup.

Available options:

- 40 MHz (ESP32_DEFAULT_CPU_FREQ_40)
- 80 MHz (ESP32_DEFAULT_CPU_FREQ_80)
- 160 MHz (ESP32_DEFAULT_CPU_FREQ_160)
- 240 MHz (ESP32_DEFAULT_CPU_FREQ_240)

CONFIG_ESP32_SPIRAM_SUPPORT

Support for external, SPI-connected RAM

Found in: Component config > ESP32-specific

This enables support for an external SPI RAM chip, connected in parallel with the main SPI flash chip.

Default value:

- No (disabled)

SPI RAM config Contains:

- *CONFIG_SPIRAM_ALLOW_BSS_SEG_EXTERNAL_MEMORY*
- *CONFIG_SPIRAM_ALLOW_NOINIT_SEG_EXTERNAL_MEMORY*
- *CONFIG_SPIRAM_ALLOW_STACK_EXTERNAL_MEMORY*
- *CONFIG_SPIRAM_SPIWP_SD3_PIN*
- *CONFIG_SPIRAM_BANKSWITCH_ENABLE*

- *CONFIG_SPIRAM_2T_MODE*
- *CONFIG_SPIRAM_CACHE_WORKAROUND*
- *CONFIG_SPIRAM_BOOT_INIT*
- *CONFIG_SPIRAM_MALLOC_ALWAYSINTERNAL*
- *PSRAM clock and cs IO for ESP32-D2WD*
- *PSRAM clock and cs IO for ESP32-DOWD*
- *PSRAM clock and cs IO for ESP32-PICO*
- *CONFIG_SPIRAM_MALLOC_RESERVE_INTERNAL*
- *CONFIG_SPIRAM_MEMTEST*
- *CONFIG_SPIRAM_SPEED*
- *CONFIG_SPIRAM_OCCUPY_SPI_HOST*
- *CONFIG_SPIRAM_USE*
- *SPIRAM cache workaround debugging*
- *SPIRAM workaround libraries placement*
- *CONFIG_SPIRAM_TRY_ALLOCATE_WIFI_LWIP*
- *CONFIG_SPIRAM_TYPE*
- *CONFIG_SPIRAM_CUSTOM_SPIWP_SD3_PIN*

CONFIG_SPIRAM_TYPE

Type of SPI RAM chip in use

Found in: Component config > ESP32-specific > CONFIG_ESP32_SPIRAM_SUPPORT > SPI RAM config

Available options:

- Auto-detect (SPIRAM_TYPE_AUTO)
- ESP-PSRAM16 or APS1604 (SPIRAM_TYPE_ESPPSRAM16)
- ESP-PSRAM32 or IS25WP032 (SPIRAM_TYPE_ESPPSRAM32)
- ESP-PSRAM64 or LY68L6400 (SPIRAM_TYPE_ESPPSRAM64)

CONFIG_SPIRAM_SPEED

Set RAM clock speed

Found in: Component config > ESP32-specific > CONFIG_ESP32_SPIRAM_SUPPORT > SPI RAM config

Select the speed for the SPI RAM chip. If SPI RAM is enabled, we only support three combinations of SPI speed mode we supported now:

1. Flash SPI running at 40Mhz and RAM SPI running at 40Mhz
2. Flash SPI running at 80Mhz and RAM SPI running at 40Mhz
3. Flash SPI running at 80Mhz and RAM SPI running at 80Mhz

Note: If the third mode(80Mhz+80Mhz) is enabled for SPI RAM of type 32MBit, one of the HSPI/VSPI host will be occupied by the system. Which SPI host to use can be selected by the config item SPIRAM_OCCUPY_SPI_HOST. Application code should never touch HSPI/VSPI hardware in this case. The option to select 80MHz will only be visible if the flash SPI speed is also 80MHz. (ESPTOOLPY_FLASHFREQ_80M is true)

Available options:

- 40MHz clock speed (SPIRAM_SPEED_40M)
- 80MHz clock speed (SPIRAM_SPEED_80M)

CONFIG_SPIRAM_BOOT_INIT

Initialize SPI RAM during startup

Found in: Component config > ESP32-specific > CONFIG_ESP32_SPIRAM_SUPPORT > SPI RAM config

If this is enabled, the SPI RAM will be enabled during initial boot. Unless you have specific requirements, you'll want to leave this enabled so memory allocated during boot-up can also be placed in SPI RAM.

Default value:

- Yes (enabled) if *CONFIG_ESP32_SPIRAM_SUPPORT*

CONFIG_SPIRAM_IGNORE_NOTFOUND

Ignore PSRAM when not found

Found in: Component config > ESP32-specific > CONFIG_ESP32_SPIRAM_SUPPORT > SPI RAM config > CONFIG_SPIRAM_BOOT_INIT

Normally, if psram initialization is enabled during compile time but not found at runtime, it is seen as an error making the CPU panic. If this is enabled, booting will complete but no PSRAM will be available.

Default value:

- No (disabled) if *CONFIG_SPIRAM_BOOT_INIT* && *CONFIG_SPIRAM_ALLOW_BSS_SEG_EXTERNAL_MEMORY* && *CONFIG_ESP32_SPIRAM_SUPPORT*

CONFIG_SPIRAM_USE

SPI RAM access method

Found in: Component config > ESP32-specific > CONFIG_ESP32_SPIRAM_SUPPORT > SPI RAM config

The SPI RAM can be accessed in multiple methods: by just having it available as an unmanaged memory region in the CPU's memory map, by integrating it in the heap as 'special' memory needing heap_caps_malloc to allocate, or by fully integrating it making malloc() also able to return SPI RAM pointers.

Available options:

- Integrate RAM into memory map (SPIRAM_USE_MEMMAP)
- Make RAM allocatable using heap_caps_malloc(···, MALLOC_CAP_SPIRAM) (SPIRAM_USE_CAPS_ALLOC)
- Make RAM allocatable using malloc() as well (SPIRAM_USE_MALLOC)

CONFIG_SPIRAM_MEMTEST

Run memory test on SPI RAM initialization

Found in: Component config > ESP32-specific > CONFIG_ESP32_SPIRAM_SUPPORT > SPI RAM config

Runs a rudimentary memory test on initialization. Aborts when memory test fails. Disable this for slightly faster startup.

Default value:

- Yes (enabled) if *CONFIG_SPIRAM_BOOT_INIT* && *CONFIG_ESP32_SPIRAM_SUPPORT*

CONFIG_SPIRAM_MALLOC_ALWAYSINTERNAL

Maximum malloc() size, in bytes, to always put in internal memory

Found in: Component config > ESP32-specific > CONFIG_ESP32_SPIRAM_SUPPORT > SPI RAM config

If malloc() is capable of also allocating SPI-connected ram, its allocation strategy will prefer to allocate chunks less than this size in internal memory, while allocations larger than this will be done from external RAM. If allocation from the preferred region fails, an attempt is made to allocate from the non-preferred region instead, so malloc() will not suddenly fail when either internal or external memory is full.

Range:

- from 0 to 131072 if SPIRAM_USE_MALLOC && *CONFIG_ESP32_SPIRAM_SUPPORT*

Default value:

- 16384 if SPIRAM_USE_MALLOC && *CONFIG_ESP32_SPIRAM_SUPPORT*

CONFIG_SPIRAM_TRY_ALLOCATE_WIFI_LWIP

Try to allocate memories of WiFi and LWIP in SPIRAM firstly. If failed, allocate internal memory

Found in: Component config > ESP32-specific > CONFIG_ESP32_SPIRAM_SUPPORT > SPI RAM config

Try to allocate memories of WiFi and LWIP in SPIRAM firstly. If failed, try to allocate internal memory then.

Default value:

- No (disabled) if (SPIRAM_USE_CAPS_ALLOC || SPIRAM_USE_MALLOC) && *CONFIG_ESP32_SPIRAM_SUPPORT*

CONFIG_SPIRAM_MALLOC_RESERVE_INTERNAL

Reserve this amount of bytes for data that specifically needs to be in DMA or internal memory

Found in: Component config > ESP32-specific > CONFIG_ESP32_SPIRAM_SUPPORT > SPI RAM config

Because the external/internal RAM allocation strategy is not always perfect, it sometimes may happen that the internal memory is entirely filled up. This causes allocations that are specifically done in internal memory, for example the stack for new tasks or memory to service DMA or have memory that' s also available when SPI cache is down, to fail. This option reserves a pool specifically for requests like that; the memory in this pool is not given out when a normal malloc() is called.

Set this to 0 to disable this feature.

Note that because FreeRTOS stacks are forced to internal memory, they will also use this memory pool; be sure to keep this in mind when adjusting this value.

Note also that the DMA reserved pool may not be one single contiguous memory region, depending on the configured size and the static memory usage of the app.

Range:

- from 0 to 262144 if SPIRAM_USE_MALLOC && *CONFIG_ESP32_SPIRAM_SUPPORT*

Default value:

- 32768 if SPIRAM_USE_MALLOC && *CONFIG_ESP32_SPIRAM_SUPPORT*

CONFIG_SPIRAM_ALLOW_BSS_SEG_EXTERNAL_MEMORY

Allow .bss segment placed in external memory

Found in: Component config > ESP32-specific > CONFIG_ESP32_SPIRAM_SUPPORT > SPI RAM config

If enabled, variables with EXT_RAM_ATTR attribute will be placed in SPIRAM instead of internal DRAM. BSS section of *lwip*, *net80211*, *pp*, *bt* libraries will be automatically placed in SPIRAM. BSS sections from other object files and libraries can also be placed in SPIRAM through linker fragment scheme *extram_bss*.

Note that the variables placed in SPIRAM using EXT_RAM_ATTR will be zero initialized.

CONFIG_SPIRAM_ALLOW_NOINIT_SEG_EXTERNAL_MEMORY

Allow .noinit segment placed in external memory

Found in: Component config > ESP32-specific > CONFIG_ESP32_SPIRAM_SUPPORT > SPI RAM config

If enabled, noinit variables can be placed in PSRAM using EXT_RAM_NOINIT_ATTR.

Note the values placed into this section will not be initialized at startup and should keep its value after software restart.

CONFIG_SPIRAM_CACHE_WORKAROUND

Enable workaround for bug in SPI RAM cache for Rev1 ESP32s

Found in: Component config > ESP32-specific > CONFIG_ESP32_SPIRAM_SUPPORT > SPI RAM config

Revision 1 of the ESP32 has a bug that can cause a write to PSRAM not to take place in some situations when the cache line needs to be fetched from external RAM and an interrupt occurs. This enables a fix in the compiler (-mfix-esp32-psram-cache-issue) that makes sure the specific code that is vulnerable to this will not be emitted.

This will also not use any bits of newlib that are located in ROM, opting for a version that is compiled with the workaround and located in flash instead.

The workaround is not required for ESP32 revision 3 and above.

Default value:

- Yes (enabled) if (SPIRAM_USE_MEMMAP || SPIRAM_USE_CAPS_ALLOC || SPIRAM_USE_MALLOC) && *CONFIG_ESP32_SPIRAM_SUPPORT*

SPIRAM cache workaround debugging Contains:

- *CONFIG_SPIRAM_CACHE_WORKAROUND_STRATEGY*

CONFIG_SPIRAM_CACHE_WORKAROUND_STRATEGY

Workaround strategy

Found in: Component config > ESP32-specific > CONFIG_ESP32_SPIRAM_SUPPORT > SPI RAM config > SPIRAM cache workaround debugging

Select the workaround strategy. Note that the strategy for precompiled libraries (libgcc, newlib, bt, wifi) is not affected by this selection.

Unless you know you need a different strategy, it's suggested you stay with the default MEMW strategy. Note that DUPLDST can interfere with hardware encryption and this will be automatically disabled if this workaround is selected. 'Insert nops' is the workaround that was used in older esp-idf versions. This workaround still can cause faulty data transfers from/to SPI RAM in some situation.

Available options:

- Insert memw after vulnerable instructions (default) (SPIRAM_CACHE_WORKAROUND_STRATEGY_MEMW)
- Duplicate LD/ST for 32-bit, memw for 8/16 bit (SPIRAM_CACHE_WORKAROUND_STRATEGY_DUPLDST)
- Insert nops between vulnerable loads/stores (old strategy, obsolete) (SPIRAM_CACHE_WORKAROUND_STRATEGY_NOPS)

SPIRAM workaround libraries placement Contains:

- *CONFIG_SPIRAM_CACHE_LIBCHAR_IN_IRAM*
- *CONFIG_SPIRAM_CACHE_LIBENV_IN_IRAM*
- *CONFIG_SPIRAM_CACHE_LIBFILE_IN_IRAM*
- *CONFIG_SPIRAM_CACHE_LIBIO_IN_IRAM*
- *CONFIG_SPIRAM_CACHE_LIBJMP_IN_IRAM*
- *CONFIG_SPIRAM_CACHE_LIBMATH_IN_IRAM*
- *CONFIG_SPIRAM_CACHE_LIBMEM_IN_IRAM*
- *CONFIG_SPIRAM_CACHE_LIBMISC_IN_IRAM*
- *CONFIG_SPIRAM_CACHE_LIBNUMPARSER_IN_IRAM*
- *CONFIG_SPIRAM_CACHE_LIBRAND_IN_IRAM*
- *CONFIG_SPIRAM_CACHE_LIBSTR_IN_IRAM*
- *CONFIG_SPIRAM_CACHE_LIBTIME_IN_IRAM*

CONFIG_SPIRAM_CACHE_LIBJMP_IN_IRAM

Put libc's jump related functions in IRAM

Found in: Component config > ESP32-specific > CONFIG_ESP32_SPIRAM_SUPPORT > SPI RAM config > SPIRAM workaround libraries placement

The functions affected by this option are: longjmp and setjmp. Putting these function in IRAM will allow them to be called when flash cache is disabled but it will also reduce the available size of free IRAM for the user application.

Default value:

- Yes (enabled) if *CONFIG_SPIRAM_CACHE_WORKAROUND* && *CONFIG_ESP32_SPIRAM_SUPPORT*

CONFIG_SPIRAM_CACHE_LIBMATH_IN_IRAM

Put libc's math related functions in IRAM

Found in: Component config > ESP32-specific > CONFIG_ESP32_SPIRAM_SUPPORT > SPI RAM config > SPIRAM workaround libraries placement

The functions affected by this option are: abs, div, labs, ldiv, quorem, fpclassify, and nan. Putting these function in IRAM will allow them to be called when flash cache is disabled but it will also reduce the available size of free IRAM for the user application.

Default value:

- Yes (enabled) if *CONFIG_SPIRAM_CACHE_WORKAROUND* && *CONFIG_ESP32_SPIRAM_SUPPORT*

CONFIG_SPIRAM_CACHE_LIBNUMPARSER_IN_IRAM

Put libc's number parsing related functions in IRAM

Found in: Component config > ESP32-specific > CONFIG_ESP32_SPIRAM_SUPPORT > SPI RAM config > SPIRAM workaround libraries placement

The functions affected by this option are: utoa, itoa, atoi, atol, strtol, and strtoul. Putting these function in IRAM will allow them to be called when flash cache is disabled but it will also reduce the available size of free IRAM for the user application.

Default value:

- Yes (enabled) if *CONFIG_SPIRAM_CACHE_WORKAROUND* && *CONFIG_ESP32_SPIRAM_SUPPORT*

CONFIG_SPIRAM_CACHE_LIBIO_IN_IRAM

Put libc's I/O related functions in IRAM

Found in: Component config > ESP32-specific > CONFIG_ESP32_SPIRAM_SUPPORT > SPI RAM config > SPIRAM workaround libraries placement

The functions affected by this option are: wcrtomb, fvwrite, wbuf, wsetup, fputwc, wctomb_r, ungetc, makebuf, fflush, refill, and sccl. Putting these function in IRAM will allow them to be called when flash cache is disabled but it will also reduce the available size of free IRAM for the user application.

Default value:

- Yes (enabled) if *CONFIG_SPIRAM_CACHE_WORKAROUND* && *CONFIG_ESP32_SPIRAM_SUPPORT*

CONFIG_SPIRAM_CACHE_LIBTIME_IN_IRAM

Put libc' s time related functions in IRAM

Found in: Component config > ESP32-specific > CONFIG_ESP32_SPIRAM_SUPPORT > SPI RAM config > SPIRAM workaround libraries placement

The functions affected by this option are: asctime, asctime_r, ctime, ctime_r, lcltime, lcltime_r, gmtime, gmtime_r, strftime, mktime, tzset_r, tzset, time, gettzinfo, systimes, month_lengths, timelocal, tzvars, tzlock, tzcalc_limits, and strptime. Putting these function in IRAM will allow them to be called when flash cache is disabled but it will also reduce the available size of free IRAM for the user application.

Default value:

- Yes (enabled) if *CONFIG_SPIRAM_CACHE_WORKAROUND* && *CONFIG_ESP32_SPIRAM_SUPPORT*

CONFIG_SPIRAM_CACHE_LIBCHAR_IN_IRAM

Put libc' s characters related functions in IRAM

Found in: Component config > ESP32-specific > CONFIG_ESP32_SPIRAM_SUPPORT > SPI RAM config > SPIRAM workaround libraries placement

The functions affected by this option are: ctype_, toupper, tolower, toascii, strupr, bzero, isalnum, isalpha, isascii, isblank, iscntrl, isdigit, isgraph, islower, isprint, ispunct, isspace, and isupper. Putting these function in IRAM will allow them to be called when flash cache is disabled but it will also reduce the available size of free IRAM for the user application.

Default value:

- Yes (enabled) if *CONFIG_SPIRAM_CACHE_WORKAROUND* && *CONFIG_ESP32_SPIRAM_SUPPORT*

CONFIG_SPIRAM_CACHE_LIBMEM_IN_IRAM

Put libc' s memory related functions in IRAM

Found in: Component config > ESP32-specific > CONFIG_ESP32_SPIRAM_SUPPORT > SPI RAM config > SPIRAM workaround libraries placement

The functions affected by this option are: memccpy, memchr memmove, and memrchr. Putting these function in IRAM will allow them to be called when flash cache is disabled but it will also reduce the available size of free IRAM for the user application.

Default value:

- Yes (enabled) if *CONFIG_SPIRAM_CACHE_WORKAROUND* && *CONFIG_ESP32_SPIRAM_SUPPORT*

CONFIG_SPIRAM_CACHE_LIBSTR_IN_IRAM

Put libc' s string related functions in IRAM

Found in: Component config > ESP32-specific > CONFIG_ESP32_SPIRAM_SUPPORT > SPI RAM config > SPIRAM workaround libraries placement

The functions affected by this option are: strcasecmp, strcasestr, strchr, strcoll, strcpy, strcspn, strdup, strdup_r, strlcat, strlcpy, strlen, strlwr, strncasecmp, strncat, strncmp, strncpy, strndup, strndup_r, strrchr, strsep, strspn, strstr, strtok_r, and strupr. Putting these function in IRAM will allow them to be called when flash cache is disabled but it will also reduce the available size of free IRAM for the user application.

Default value:

- Yes (enabled) if *CONFIG_SPIRAM_CACHE_WORKAROUND* && *CONFIG_ESP32_SPIRAM_SUPPORT*

CONFIG_SPIRAM_CACHE_LIBRAND_IN_IRAM

Put libc' s random related functions in IRAM

Found in: Component config > ESP32-specific > CONFIG_ESP32_SPIRAM_SUPPORT > SPI RAM config > SPIRAM workaround libraries placement

The functions affected by this option are: srand, rand, and rand_r. Putting these function in IRAM will allow them to be called when flash cache is disabled but it will also reduce the available size of free IRAM for the user application.

Default value:

- Yes (enabled) if *CONFIG_SPIRAM_CACHE_WORKAROUND* && *CONFIG_ESP32_SPIRAM_SUPPORT*

CONFIG_SPIRAM_CACHE_LIBENV_IN_IRAM

Put libc' s environment related functions in IRAM

Found in: Component config > ESP32-specific > CONFIG_ESP32_SPIRAM_SUPPORT > SPI RAM config > SPIRAM workaround libraries placement

The functions affected by this option are: environ, envlock, and getenv_r. Putting these function in IRAM will allow them to be called when flash cache is disabled but it will also reduce the available size of free IRAM for the user application.

Default value:

- Yes (enabled) if *CONFIG_SPIRAM_CACHE_WORKAROUND* && *CONFIG_ESP32_SPIRAM_SUPPORT*

CONFIG_SPIRAM_CACHE_LIBFILE_IN_IRAM

Put libc' s file related functions in IRAM

Found in: Component config > ESP32-specific > CONFIG_ESP32_SPIRAM_SUPPORT > SPI RAM config > SPIRAM workaround libraries placement

The functions affected by this option are: lock, isatty, fclose, open, close, creat, read, rshift, sbrk, stdio, syssbrk, sysclose, sysopen, creat, sysread, syswrite, impure, fwalk, and findfp. Putting these function in IRAM will allow them to be called when flash cache is disabled but it will also reduce the available size of free IRAM for the user application.

Default value:

- Yes (enabled) if *CONFIG_SPIRAM_CACHE_WORKAROUND* && *CONFIG_ESP32_SPIRAM_SUPPORT*

CONFIG_SPIRAM_CACHE_LIBMISC_IN_IRAM

Put libc' s miscellaneous functions in IRAM, see help

Found in: Component config > ESP32-specific > CONFIG_ESP32_SPIRAM_SUPPORT > SPI RAM config > SPIRAM workaround libraries placement

The functions affected by this option are: raise and system Putting these function in IRAM will allow them to be called when flash cache is disabled but it will also reduce the available size of free IRAM for the user application.

Default value:

- Yes (enabled) if *CONFIG_SPIRAM_CACHE_WORKAROUND* && *CONFIG_ESP32_SPIRAM_SUPPORT*

CONFIG_SPIRAM_BANKSWITCH_ENABLE

Enable bank switching for >4MiB external RAM

Found in: Component config > ESP32-specific > CONFIG_ESP32_SPIRAM_SUPPORT > SPI RAM config

The ESP32 only supports 4MiB of external RAM in its address space. The hardware does support larger memories, but these have to be bank-switched in and out of this address space. Enabling this allows you to reserve some MMU pages for this, which allows the use of the esp_himem api to manage these banks.

#Note that this is limited to 62 banks, as esp_spiram_writeback_cache needs some kind of mapping of #some banks below that mark to work. We cannot at this moment guarantee this to exist when himem is #enabled.

If spiram 2T mode is enabled, the size of 64Mbit psram will be changed as 32Mbit, so himem will be unusable.

Default value:

- Yes (enabled) if (SPIRAM_USE_MEMMAP || SPIRAM_USE_CAPS_ALLOC || SPIRAM_USE_MALLOC) && *CONFIG_ESP32_SPIRAM_SUPPORT*

CONFIG_SPIRAM_BANKSWITCH_RESERVE

Amount of 32K pages to reserve for bank switching

Found in: Component config > ESP32-specific > CONFIG_ESP32_SPIRAM_SUPPORT > SPI RAM config > CONFIG_SPIRAM_BANKSWITCH_ENABLE

Select the amount of banks reserved for bank switching. Note that the amount of RAM allocatable with malloc/esp_heap_alloc_caps will decrease by 32K for each page reserved here.

Note that this reservation is only actually done if your program actually uses the himem API. Without any himem calls, the reservation is not done and the original amount of memory will be available to malloc/esp_heap_alloc_caps.

Range:

- from 1 to 62 if *CONFIG_SPIRAM_BANKSWITCH_ENABLE* && *CONFIG_ESP32_SPIRAM_SUPPORT*

Default value:

- 8 if *CONFIG_SPIRAM_BANKSWITCH_ENABLE* && *CONFIG_ESP32_SPIRAM_SUPPORT*

CONFIG_SPIRAM_ALLOW_STACK_EXTERNAL_MEMORY

Allow external memory as an argument to xTaskCreateStatic

Found in: Component config > ESP32-specific > CONFIG_ESP32_SPIRAM_SUPPORT > SPI RAM config

Because some bits of the ESP32 code environment cannot be recompiled with the cache workaround, normally tasks cannot be safely run with their stack residing in external memory; for this reason xTaskCreate (and related task creaton functions) always allocate stack in internal memory and xTaskCreateStatic will check if the memory passed to it is in internal memory. If you have a task that needs a large amount of stack and does not call on ROM code in any way (no direct calls, but also no Bluetooth/WiFi), you can try enable this to cause xTaskCreateStatic to allow tasks stack in external memory.

Default value:

- No (disabled) if SPIRAM_USE_MALLOC && *CONFIG_ESP32_SPIRAM_SUPPORT*

CONFIG_SPIRAM_OCCUPY_SPI_HOST

SPI host to use for 32MBit PSRAM

Found in: Component config > ESP32-specific > CONFIG_ESP32_SPIRAM_SUPPORT > SPI RAM config

When both flash and PSRAM is working under 80MHz, and the PSRAM is of type 32MBit, one of the HSPI/VSPI host will be used to output the clock. Select which one to use here.

Available options:

- HSPI host (SPI2) (SPIRAM_OCCUPY_HSPI_HOST)
- VSPI host (SPI3) (SPIRAM_OCCUPY_VSPI_HOST)
- Will not try to use any host, will abort if not able to use the PSRAM (SPIRAM_OCCUPY_NO_HOST)

PSRAM clock and cs IO for ESP32-DOWD Contains:

- *CONFIG_D0WD_PSRAM_CLK_IO*
- *CONFIG_D0WD_PSRAM_CS_IO*

CONFIG_D0WD_PSRAM_CLK_IO

PSRAM CLK IO number

Found in: Component config > ESP32-specific > CONFIG_ESP32_SPIRAM_SUPPORT > SPI RAM config > PSRAM clock and cs IO for ESP32-DOWD

The PSRAM CLOCK IO can be any unused GPIO, user can config it based on hardware design. If user use 1.8V flash and 1.8V psram, this value can only be one of 6, 7, 8, 9, 10, 11, 16, 17.

Range:

- from 0 to 33 if *CONFIG_ESP32_SPIRAM_SUPPORT* && *CONFIG_ESP32_SPIRAM_SUPPORT*

Default value:

- 17 if *CONFIG_ESP32_SPIRAM_SUPPORT* && *CONFIG_ESP32_SPIRAM_SUPPORT*

CONFIG_D0WD_PSRAM_CS_IO

PSRAM CS IO number

Found in: Component config > ESP32-specific > CONFIG_ESP32_SPIRAM_SUPPORT > SPI RAM config > PSRAM clock and cs IO for ESP32-DOWD

The PSRAM CS IO can be any unused GPIO, user can config it based on hardware design. If user use 1.8V flash and 1.8V psram, this value can only be one of 6, 7, 8, 9, 10, 11, 16, 17.

Range:

- from 0 to 33 if *CONFIG_ESP32_SPIRAM_SUPPORT* && *CONFIG_ESP32_SPIRAM_SUPPORT*

Default value:

- 16 if *CONFIG_ESP32_SPIRAM_SUPPORT* && *CONFIG_ESP32_SPIRAM_SUPPORT*

PSRAM clock and cs IO for ESP32-D2WD Contains:

- *CONFIG_D2WD_PSRAM_CLK_IO*
- *CONFIG_D2WD_PSRAM_CS_IO*

CONFIG_D2WD_PSRAM_CLK_IO

PSRAM CLK IO number

Found in: Component config > ESP32-specific > CONFIG_ESP32_SPIRAM_SUPPORT > SPI RAM config > PSRAM clock and cs IO for ESP32-D2WD

User can config it based on hardware design. For ESP32-D2WD chip, the psram can only be 1.8V psram, so this value can only be one of 6, 7, 8, 9, 10, 11, 16, 17.

Range:

- from 0 to 33 if *CONFIG_ESP32_SPIRAM_SUPPORT* && *CONFIG_ESP32_SPIRAM_SUPPORT*

Default value:

- 9 if *CONFIG_ESP32_SPIRAM_SUPPORT* && *CONFIG_ESP32_SPIRAM_SUPPORT*

CONFIG_D2WD_PSRAM_CS_IO

PSRAM CS IO number

Found in: Component config > ESP32-specific > CONFIG_ESP32_SPIRAM_SUPPORT > SPI RAM config > PSRAM clock and cs IO for ESP32-D2WD

User can config it based on hardware design. For ESP32-D2WD chip, the psram can only be 1.8V psram, so this value can only be one of 6, 7, 8, 9, 10, 11, 16, 17.

Range:

- from 0 to 33 if *CONFIG_ESP32_SPIRAM_SUPPORT* && *CONFIG_ESP32_SPIRAM_SUPPORT*

Default value:

- 10 if *CONFIG_ESP32_SPIRAM_SUPPORT* && *CONFIG_ESP32_SPIRAM_SUPPORT*

PSRAM clock and cs IO for ESP32-PICO

Contains:

- *CONFIG_PICO_PSRAM_CS_IO*

CONFIG_PICO_PSRAM_CS_IO

PSRAM CS IO number

Found in: Component config > ESP32-specific > CONFIG_ESP32_SPIRAM_SUPPORT > SPI RAM config > PSRAM clock and cs IO for ESP32-PICO

The PSRAM CS IO can be any unused GPIO, user can config it based on hardware design.

For ESP32-PICO chip, the psram share clock with flash, so user do not need to configure the clock IO. For the reference hardware design, please refer to https://www.espressif.com/sites/default/files/documentation/esp32-pico-d4_datasheet_en.pdf

Range:

- from 0 to 33 if *CONFIG_ESP32_SPIRAM_SUPPORT* && *CONFIG_ESP32_SPIRAM_SUPPORT*

Default value:

- 10 if *CONFIG_ESP32_SPIRAM_SUPPORT* && *CONFIG_ESP32_SPIRAM_SUPPORT*

CONFIG_SPIRAM_CUSTOM_SPIWP_SD3_PIN

Use custom SPI PSRAM WP(SD3) Pin when flash pins set in eFuse (read help)

Found in: Component config > ESP32-specific > CONFIG_ESP32_SPIRAM_SUPPORT > SPI RAM config

This setting is only used if the SPI flash pins have been overridden by setting the eFuses SPI_PAD_CONFIG_xxx, and the SPI flash mode is DIO or DOUT.

When this is the case, the eFuse config only defines 3 of the 4 Quad I/O data pins. The WP pin (aka ESP32 pin "SD_DATA_3" or SPI flash pin "IO2") is not specified in eFuse. The psram only has QPI mode, so a WP pin setting is necessary.

If this config item is set to N (default), the correct WP pin will be automatically used for any Espressif chip or module with integrated flash. If a custom setting is needed, set this config item to Y and specify the GPIO number connected to the WP pin.

When flash mode is set to QIO or QOUT, the PSRAM WP pin will be set the same as the SPI Flash WP pin configured in the bootloader.

Default value:

- No (disabled) if (ESPTOOLPY_FLASHMODE_DIO || ESPTOOLPY_FLASHMODE_DOUT) && *CONFIG_ESP32_SPIRAM_SUPPORT*

CONFIG_SPIRAM_SPIWP_SD3_PIN

Custom SPI PSRAM WP(SD3) Pin

Found in: Component config > ESP32-specific > CONFIG_ESP32_SPIRAM_SUPPORT > SPI RAM config

The option "Use custom SPI PSRAM WP(SD3) pin" must be set or this value is ignored

If burning a customized set of SPI flash pins in eFuse and using DIO or DOUT mode for flash, set this value to the GPIO number of the SPIRAM WP pin.

Range:

- from 0 to 33 if (ESPTOOLPY_FLASHMODE_DIO || ESPTOOLPY_FLASHMODE_DOUT) && *CONFIG_ESP32_SPIRAM_SUPPORT*

Default value:

- 7 if (ESPTOOLPY_FLASHMODE_DIO || ESPTOOLPY_FLASHMODE_DOUT) && *CONFIG_ESP32_SPIRAM_SUPPORT*

CONFIG_SPIRAM_2T_MODE

Enable SPI PSRAM 2T mode

Found in: Component config > ESP32-specific > CONFIG_ESP32_SPIRAM_SUPPORT > SPI RAM config

Enable this option to fix single bit errors inside 64Mbit PSRAM.

Some 64Mbit PSRAM chips have a hardware issue in the RAM which causes bit errors at multiple fixed bit positions.

Note: If this option is enabled, the 64Mbit PSRAM chip will appear to be 32Mbit in size. Applications will not be affected unless the use the esp_himem APIs, which are not supported in 2T mode.

Default value:

- No (disabled) if *CONFIG_ESP32_SPIRAM_SUPPORT* && *CONFIG_ESP32_SPIRAM_SUPPORT*

CONFIG_ESP32_TRAX

Use TRAX tracing feature

Found in: Component config > ESP32-specific

The ESP32 contains a feature which allows you to trace the execution path the processor has taken through the program. This is stored in a chunk of 32K (16K for single-processor) of memory that can't be used for general purposes anymore. Disable this if you do not know what this is.

Default value:

- No (disabled)

CONFIG_ESP32_TRAX_TWOBANKS

Reserve memory for tracing both pro as well as app cpu execution

Found in: Component config > ESP32-specific > CONFIG_ESP32_TRAX

The ESP32 contains a feature which allows you to trace the execution path the processor has taken through the program. This is stored in a chunk of 32K (16K for single-processor) of memory that can't be used for general purposes anymore. Disable this if you do not know what this is.

Memory to reverse for trace, used in linker script

Default value:

- No (disabled) if *CONFIG_ESP32_TRAX* && *CONFIG_FREERTOS_UNICORE*

CONFIG_ESP32_ULP_COPROC_ENABLED

Enable Ultra Low Power (ULP) Coprocessor

Found in: Component config > ESP32-specific

Set to 'y' if you plan to load a firmware for the coprocessor.

If this option is enabled, further coprocessor configuration will appear in the Components menu.

Default value:

- No (disabled)

CONFIG_ESP32_ULP_COPROC_RESERVE_MEM

RTC slow memory reserved for coprocessor

Found in: Component config > ESP32-specific > CONFIG_ESP32_ULP_COPROC_ENABLED

Bytes of memory to reserve for ULP coprocessor firmware & data.

Data is reserved at the beginning of RTC slow memory.

Range:

- from 32 to 8176 if *CONFIG_ESP32_ULP_COPROC_ENABLED*
- from 0 to 0 if *CONFIG_ESP32_ULP_COPROC_ENABLED*

Default value:

- 512 if *CONFIG_ESP32_ULP_COPROC_ENABLED*
- 0 if *CONFIG_ESP32_ULP_COPROC_ENABLED*

CONFIG_ESP32_DEBUG_OCDAWARE

Make exception and panic handlers JTAG/OCD aware

Found in: Component config > ESP32-specific

The FreeRTOS panic and unhandled exception handers can detect a JTAG OCD debugger and instead of panicking, have the debugger stop on the offending instruction.

Default value:

- Yes (enabled)

CONFIG_ESP32_BROWNOUT_DET

Hardware brownout detect & reset

Found in: Component config > ESP32-specific

The ESP32 has a built-in brownout detector which can detect if the voltage is lower than a specific value. If this happens, it will reset the chip in order to prevent unintended behaviour.

Default value:

- Yes (enabled)

CONFIG_ESP32_BROWNOUT_DET_LVL_SEL

Brownout voltage level

Found in: Component config > ESP32-specific > CONFIG_ESP32_BROWNOUT_DET

The brownout detector will reset the chip when the supply voltage is approximately below this level. Note that there may be some variation of brownout voltage level between each ESP32 chip.

#The voltage levels here are estimates, more work needs to be done to figure out the exact voltages #of the brownout threshold levels.

Available options:

- 2.43V +/- 0.05 (ESP32_BROWNOUT_DET_LVL_SEL_0)
- 2.48V +/- 0.05 (ESP32_BROWNOUT_DET_LVL_SEL_1)
- 2.58V +/- 0.05 (ESP32_BROWNOUT_DET_LVL_SEL_2)
- 2.62V +/- 0.05 (ESP32_BROWNOUT_DET_LVL_SEL_3)
- 2.67V +/- 0.05 (ESP32_BROWNOUT_DET_LVL_SEL_4)
- 2.70V +/- 0.05 (ESP32_BROWNOUT_DET_LVL_SEL_5)
- 2.77V +/- 0.05 (ESP32_BROWNOUT_DET_LVL_SEL_6)
- 2.80V +/- 0.05 (ESP32_BROWNOUT_DET_LVL_SEL_7)

CONFIG_ESP32_TIME_SYSCALL

Timers used for gettimeofday function

Found in: Component config > ESP32-specific

This setting defines which hardware timers are used to implement 'gettimeofday' and 'time' functions in C library.

- If both high-resolution and RTC timers are used, timekeeping will continue in deep sleep. Time will be reported at 1 microsecond resolution. This is the default, and the recommended option.
- If only high-resolution timer is used, gettimeofday will provide time at microsecond resolution. Time will not be preserved when going into deep sleep mode.
- If only RTC timer is used, timekeeping will continue in deep sleep, but time will be measured at 6.(6) microsecond resolution. Also the gettimeofday function itself may take longer to run.
- If no timers are used, gettimeofday and time functions return -1 and set errno to ENOSYS.
- When RTC is used for timekeeping, two RTC_STORE registers are used to keep time in deep sleep mode.

Available options:

- RTC and high-resolution timer (ESP32_TIME_SYSCALL_USE_RTC_FRC1)
- RTC (ESP32_TIME_SYSCALL_USE_RTC)
- High-resolution timer (ESP32_TIME_SYSCALL_USE_FRC1)
- None (ESP32_TIME_SYSCALL_USE_NONE)

CONFIG_ESP32_RTC_CLK_SRC

RTC clock source

Found in: Component config > ESP32-specific

Choose which clock is used as RTC clock source.

- "Internal 150kHz oscillator" option provides lowest deep sleep current consumption, and does not require extra external components. However frequency stability with respect to temperature is poor, so time may drift in deep/light sleep modes.
- "External 32kHz crystal" provides better frequency stability, at the expense of slightly higher (1uA) deep sleep current consumption.
- "External 32kHz oscillator" allows using 32kHz clock generated by an external circuit. In this case, external clock signal must be connected to 32K_XN pin. Amplitude should be <1.2V in case of sine wave signal, and <1V in case of square wave signal. Common mode voltage should be 0.1 < Vcm < 0.5Vamp, where Vamp is the signal amplitude. Additionally, 1nF capacitor must be connected between 32K_XP pin and ground. 32K_XP pin can not be used as a GPIO in this case.
- "Internal 8.5MHz oscillator divided by 256" option results in higher deep sleep current (by 5uA) but has better frequency stability than the internal 150kHz oscillator. It does not require external components.

Available options:

- Internal 150kHz RC oscillator (ESP32_RTC_CLK_SRC_INT_RC)
- External 32kHz crystal (ESP32_RTC_CLK_SRC_EXT_CRYS)
- External 32kHz oscillator at 32K_XN pin (ESP32_RTC_CLK_SRC_EXT_OSC)
- Internal 8.5MHz oscillator, divided by 256 (~33kHz) (ESP32_RTC_CLK_SRC_INT_8MD256)

CONFIG_ESP32_RTC_EXT_CRYST_ADDIT_CURRENT_METHOD

Additional current for external 32kHz crystal

Found in: Component config > ESP32-specific

With some 32kHz crystal configurations, the X32N and X32P pins may not have enough drive strength to keep the crystal oscillating. Choose the method to provide additional current from touchpad 9 to the external 32kHz crystal. Note that the deep sleep current is slightly high (4-5uA) and the touchpad and the wakeup sources of both touchpad and ULP are not available in method 1 and method 2.

This problem is fixed in ESP32 ECO 3, so this workaround is not needed. Setting the project configuration to minimum revision ECO3 will disable this option, , allow all wakeup sources, and save some code size.

- "None" option will not provide additional current to external crystal
- "Method 1" option can't ensure 100% to solve the external 32k crystal start failed issue, but the touchpad can work in this method.
- "Method 2" option can solve the external 32k issue, but the touchpad can't work in this method.

Available options:

- None (ESP32_RTC_EXT_CRYST_ADDIT_CURRENT_NONE)
- Method 1 (ESP32_RTC_EXT_CRYST_ADDIT_CURRENT)
- Method 2 (ESP32_RTC_EXT_CRYST_ADDIT_CURRENT_V2)

CONFIG_ESP32_RTC_CLK_CAL_CYCLES

Number of cycles for RTC_SLOW_CLK calibration

Found in: Component config > ESP32-specific

When the startup code initializes RTC_SLOW_CLK, it can perform calibration by comparing the RTC_SLOW_CLK frequency with main XTAL frequency. This option sets the number of RTC_SLOW_CLK cycles measured by the calibration routine. Higher numbers increase calibration precision, which may be important for applications which spend a lot of time in deep sleep. Lower numbers reduce startup time.

When this option is set to 0, clock calibration will not be performed at startup, and approximate clock frequencies will be assumed:

- 150000 Hz if internal RC oscillator is used as clock source. For this use value 1024.
- 32768 Hz if the 32k crystal oscillator is used. For this use value 3000 or more. In case more value will help improve the definition of the launch of the crystal. If the crystal could not start, it will be switched to internal RC.

Range:

- from 0 to 27000 if ESP32_RTC_CLK_SRC_EXT_CRYS || ESP32_RTC_CLK_SRC_EXT_OSC || ESP32_RTC_CLK_SRC_INT_8MD256
- from 0 to 32766

Default value:

- 3000 if ESP32_RTC_CLK_SRC_EXT_CRYS || ESP32_RTC_CLK_SRC_EXT_OSC || ESP32_RTC_CLK_SRC_INT_8MD256
- 1024

CONFIG_ESP32_RTC_XTAL_CAL_RETRY

Number of attempts to repeat 32k XTAL calibration

Found in: Component config > ESP32-specific

Number of attempts to repeat 32k XTAL calibration before giving up and switching to the internal RC. Increase this option if the 32k crystal oscillator does not start and switches to internal RC.

Default value:

- 1 if ESP32_RTC_CLK_SRC_EXT_CRYS

CONFIG_ESP32_DEEP_SLEEP_WAKEUP_DELAY

Extra delay in deep sleep wake stub (in us)

Found in: Component config > ESP32-specific

When ESP32 exits deep sleep, the CPU and the flash chip are powered on at the same time. CPU will run deep sleep stub first, and then proceed to load code from flash. Some flash chips need sufficient time to pass between power on and first read operation. By default, without any extra delay, this time is approximately 900us, although some flash chip types need more than that.

By default extra delay is set to 2000us. When optimizing startup time for applications which require it, this value may be reduced.

If you are seeing "flash read err, 1000" message printed to the console after deep sleep reset, try increasing this value.

Range:
- from 0 to 5000

Default value:
- 2000

CONFIG_ESP32_XTAL_FREQ_SEL

Main XTAL frequency

Found in: Component config > ESP32-specific

ESP32 currently supports the following XTAL frequencies:

- 26 MHz
- 40 MHz

Startup code can automatically estimate XTAL frequency. This feature uses the internal 8MHz oscillator as a reference. Because the internal oscillator frequency is temperature dependent, it is not recommended to use automatic XTAL frequency detection in applications which need to work at high ambient temperatures and use high-temperature qualified chips and modules.

Available options:
- 40 MHz (ESP32_XTAL_FREQ_40)
- 26 MHz (ESP32_XTAL_FREQ_26)
- Autodetect (ESP32_XTAL_FREQ_AUTO)

CONFIG_ESP32_DISABLE_BASIC_ROM_CONSOLE

Permanently disable BASIC ROM Console

Found in: Component config > ESP32-specific

If set, the first time the app boots it will disable the BASIC ROM Console permanently (by burning an eFuse).

Otherwise, the BASIC ROM Console starts on reset if no valid bootloader is read from the flash.

(Enabling secure boot also disables the BASIC ROM Console by default.)

Default value:
- No (disabled)

CONFIG_ESP32_NO_BLOBS

No Binary Blobs

Found in: Component config > ESP32-specific

If enabled, this disables the linking of binary libraries in the application build. Note that after enabling this Wi-Fi/Bluetooth will not work.

Default value:

- No (disabled) if *CONFIG_BT_ENABLED*

CONFIG_ESP32_COMPATIBLE_PRE_V2_1_BOOTLOADERS

App compatible with bootloaders before ESP-IDF v2.1

Found in: Component config > ESP32-specific

Bootloaders before ESP-IDF v2.1 did less initialisation of the system clock. This setting needs to be enabled to build an app which can be booted by these older bootloaders.

If this setting is enabled, the app can be booted by any bootloader from IDF v1.0 up to the current version.

If this setting is disabled, the app can only be booted by bootloaders from IDF v2.1 or newer.

Enabling this setting adds approximately 1KB to the app' s IRAM usage.

Default value:

- No (disabled)

CONFIG_ESP32_COMPATIBLE_PRE_V3_1_BOOTLOADERS

App compatible with bootloader and partition table before ESP-IDF v3.1

Found in: Component config > ESP32-specific

Partition tables before ESP-IDF V3.1 do not contain an MD5 checksum field, and the bootloader before ESP-IDF v3.1 cannot read a partition table that contains an MD5 checksum field.

Enable this option only if your app needs to boot on a bootloader and/or partition table that was generated from a version *before* ESP-IDF v3.1.

If this option and Flash Encryption are enabled at the same time, and any data partitions in the partition table are marked Encrypted, then the partition encrypted flag should be manually verified in the app before accessing the partition (see CVE-2021-27926).

Default value:

- No (disabled)

CONFIG_ESP32_RTCDATA_IN_FAST_MEM

Place RTC_DATA_ATTR and RTC_RODATA_ATTR variables into RTC fast memory segment

Found in: Component config > ESP32-specific

This option allows to place .rtc_data and .rtc_rodata sections into RTC fast memory segment to free the slow memory region for ULP programs. This option depends on the CONFIG_FREERTOS_UNICORE option because RTC fast memory can be accessed only by PRO_CPU core.

Default value:

- No (disabled) if *CONFIG_FREERTOS_UNICORE*

CONFIG_ESP32_USE_FIXED_STATIC_RAM_SIZE

Use fixed static RAM size

Found in: Component config > ESP32-specific

If this option is disabled, the DRAM part of the heap starts right after the .bss section, within the dram0_0 region. As a result, adding or removing some static variables will change the available heap size.

If this option is enabled, the DRAM part of the heap starts right after the dram0_0 region, where its length is set with ESP32_FIXED_STATIC_RAM_SIZE

Default value:

- No (disabled)

CONFIG_ESP32_FIXED_STATIC_RAM_SIZE

Fixed Static RAM size

Found in: Component config > ESP32-specific > CONFIG_ESP32_USE_FIXED_STATIC_RAM_SIZE

RAM size dedicated for static variables (.data & .bss sections). Please note that the actual length will be reduced by BTDM_RESERVE_DRAM if Bluetooth controller is enabled.

Range:

- from 0 to 0x2c200 if *CONFIG_ESP32_USE_FIXED_STATIC_RAM_SIZE*

Default value:

- "0x1E000" if *CONFIG_ESP32_USE_FIXED_STATIC_RAM_SIZE*

CONFIG_ESP32_DPORT_DIS_INTERRUPT_LVL

Disable the interrupt level for the DPORT workarounds

Found in: Component config > ESP32-specific

To prevent interrupting DPORT workarounds, need to disable interrupt with a maximum used level in the system.

Default value:

- 5

CONFIG_ESP32_IRAM_AS_8BIT_ACCESSIBLE_MEMORY

Enable IRAM as 8 bit accessible memory

Found in: Component config > ESP32-specific

If enabled, application can use IRAM as byte accessible region for storing data (Note: IRAM region cannot be used as task stack)

This is possible due to handling of exceptions *LoadStoreError (3)* and *LoadStoreAlignmentError (9)* Each unaligned read/write access will incur a penalty of maximum of 167 CPU cycles.

ADC-Calibration

Contains:

- *CONFIG_ADC_CAL_EFUSE_VREF_ENABLE*
- *CONFIG_ADC_CAL_LUT_ENABLE*
- *CONFIG_ADC_CAL_EFUSE_TP_ENABLE*

CONFIG_ADC_CAL_EFUSE_TP_ENABLE

Use Two Point Values

Found in: Component config > ADC-Calibration

Some ESP32s have Two Point calibration values burned into eFuse BLOCK3. This option will allow the ADC calibration component to characterize the ADC-Voltage curve using Two Point values if they are available.

Default value:

- Yes (enabled)

CONFIG_ADC_CAL_EFUSE_VREF_ENABLE

Use eFuse Vref

Found in: Component config > ADC-Calibration

Some ESP32s have Vref burned into eFuse BLOCK0. This option will allow the ADC calibration component to characterize the ADC-Voltage curve using eFuse Vref if it is available.

Default value:

- Yes (enabled)

CONFIG_ADC_CAL_LUT_ENABLE

Use Lookup Tables

Found in: Component config > ADC-Calibration

This option will allow the ADC calibration component to use Lookup Tables to correct for non-linear behavior in 11db attenuation. Other attenuations do not exhibit non-linear behavior hence will not be affected by this option.

Default value:

- Yes (enabled)

Common ESP-related

Contains:

- *CONFIG_ESP_ERR_TO_NAME_LOOKUP*

CONFIG_ESP_ERR_TO_NAME_LOOKUP

Enable lookup of error code strings

Found in: Component config > Common ESP-related

Functions esp_err_to_name() and esp_err_to_name_r() return string representations of error codes from a pre-generated lookup table. This option can be used to turn off the use of the look-up table in order to save memory but this comes at the price of sacrificing distinguishable (meaningful) output string representations.

Default value:

- Yes (enabled)

Ethernet

Contains:

- *CONFIG_ETH_USE_ESP32_EMAC*
- *CONFIG_ETH_USE_OPENETH*
- *CONFIG_ETH_USE_SPI_ETHERNET*

CONFIG_ETH_USE_ESP32_EMAC

Support ESP32 internal EMAC controller

Found in: Component config > Ethernet

ESP32 integrates a 10/100M Ethernet MAC controller.

Default value:

- Yes (enabled)

Contains:

- *CONFIG_ETH_DMA_RX_BUFFER_NUM*
- *CONFIG_ETH_DMA_TX_BUFFER_NUM*
- *CONFIG_ETH_SOFT_FLOW_CONTROL*

- *CONFIG_ETH_DMA_BUFFER_SIZE*
- *CONFIG_ETH_RMII_CLK_OUTPUT_GPIO0*
- *CONFIG_ETH_PHY_INTERFACE*
- *CONFIG_ETH_RMII_CLK_OUT_GPIO*
- *CONFIG_ETH_RMII_CLK_MODE*

CONFIG_ETH_PHY_INTERFACE

PHY interface

Found in: Component config > Ethernet > CONFIG_ETH_USE_ESP32_EMAC

Select the communication interface between MAC and PHY chip.

Available options:

- Reduced Media Independent Interface (RMII) (ETH_PHY_INTERFACE_RMII)

CONFIG_ETH_RMII_CLK_MODE

RMII clock mode

Found in: Component config > Ethernet > CONFIG_ETH_USE_ESP32_EMAC

Select external or internal RMII clock.

Available options:

- Input RMII clock from external (ETH_RMII_CLK_INPUT)
  MAC will get RMII clock from outside. Note that ESP32 only supports GPIO0 to input the RMII clock.
- Output RMII clock from internal (ETH_RMII_CLK_OUTPUT)
  ESP32 can generate RMII clock by internal APLL. This clock can be routed to the external PHY device. ESP32 supports to route the RMII clock to GPIO0/16/17.

CONFIG_ETH_RMII_CLK_OUTPUT_GPIO0

Output RMII clock from GPIO0 (Experimental!)

Found in: Component config > Ethernet > CONFIG_ETH_USE_ESP32_EMAC

GPIO0 can be set to output a pre-divided PLL clock (test only!). Enabling this option will configure GPIO0 to output a 50MHz clock. In fact this clock doesn't have directly relationship with EMAC peripheral. Sometimes this clock won't work well with your PHY chip. You might need to add some extra devices after GPIO0 (e.g. inverter). Note that outputting RMII clock on GPIO0 is an experimental practice. If you want the Ethernet to work with WiFi, don't select GPIO0 output mode for stability.

Default value:

- No (disabled) if ETH_RMII_CLK_OUTPUT && *CONFIG_ETH_USE_ESP32_EMAC*

CONFIG_ETH_RMII_CLK_OUT_GPIO

RMII clock GPIO number

Found in: Component config > Ethernet > CONFIG_ETH_USE_ESP32_EMAC

Set the GPIO number to output RMII Clock.

Range:

- from 16 to 17 if *CONFIG_ETH_RMII_CLK_OUTPUT_GPIO0* && ETH_RMII_CLK_OUTPUT && *CONFIG_ETH_USE_ESP32_EMAC*

Default value:

- 17 if *CONFIG_ETH_RMII_CLK_OUTPUT_GPIO0* && ETH_RMII_CLK_OUTPUT && *CONFIG_ETH_USE_ESP32_EMAC*

CONFIG_ETH_DMA_BUFFER_SIZE

Ethernet DMA buffer size (Byte)

Found in: Component config > Ethernet > CONFIG_ETH_USE_ESP32_EMAC

Set the size of each buffer used by Ethernet MAC DMA.

Range:
- from 256 to 1600

Default value:
- 512

CONFIG_ETH_DMA_RX_BUFFER_NUM

Amount of Ethernet DMA Rx buffers

Found in: Component config > Ethernet > CONFIG_ETH_USE_ESP32_EMAC

Number of DMA receive buffers. Each buffer' s size is ETH_DMA_BUFFER_SIZE. Larger number of buffers could increase throughput somehow.

Range:
- from 3 to 30

Default value:
- 10

CONFIG_ETH_DMA_TX_BUFFER_NUM

Amount of Ethernet DMA Tx buffers

Found in: Component config > Ethernet > CONFIG_ETH_USE_ESP32_EMAC

Number of DMA transmit buffers. Each buffer' s size is ETH_DMA_BUFFER_SIZE. Larger number of buffers could increase throughput somehow.

Range:
- from 3 to 30

Default value:
- 10

CONFIG_ETH_SOFT_FLOW_CONTROL

Enable software flow control

Found in: Component config > Ethernet > CONFIG_ETH_USE_ESP32_EMAC

Ethernet MAC engine on ESP32 doesn' t feature a flow control logic. The MAC driver can perform a software flow control if you enable this option. Note that, if the RX buffer number is small, enabling software flow control will cause obvious performance loss.

Default value:
- No (disabled) if *CONFIG_ETH_DMA_RX_BUFFER_NUM* > 15 && *CONFIG_ETH_USE_ESP32_EMAC*

CONFIG_ETH_USE_SPI_ETHERNET

Support SPI to Ethernet Module

Found in: Component config > Ethernet

ESP-IDF can also support some SPI-Ethernet modules.

Default value:
- Yes (enabled)

Contains:

- *CONFIG_ETH_SPI_ETHERNET_DM9051*
- *CONFIG_ETH_SPI_ETHERNET_KSZ8851SNL*
- *CONFIG_ETH_SPI_ETHERNET_W5500*

CONFIG_ETH_SPI_ETHERNET_DM9051

Use DM9051

Found in: Component config > Ethernet > CONFIG_ETH_USE_SPI_ETHERNET

DM9051 is a fast Ethernet controller with an SPI interface. It' s also integrated with a 10/100M PHY and MAC. Select this to enable DM9051 driver.

CONFIG_ETH_SPI_ETHERNET_W5500

Use W5500 (MAC RAW)

Found in: Component config > Ethernet > CONFIG_ETH_USE_SPI_ETHERNET

W5500 is a HW TCP/IP embedded Ethernet controller. TCP/IP stack, 10/100 Ethernet MAC and PHY are embedded in a single chip. However the driver in ESP-IDF only enables the RAW MAC mode, making it compatible with the software TCP/IP stack. Say yes to enable W5500 driver.

CONFIG_ETH_SPI_ETHERNET_KSZ8851SNL

Use KSZ8851SNL

Found in: Component config > Ethernet > CONFIG_ETH_USE_SPI_ETHERNET

The KSZ8851SNL is a single-chip Fast Ethernet controller consisting of a 10/100 physical layer transceiver (PHY), a MAC, and a Serial Peripheral Interface (SPI). Select this to enable KSZ8851SNL driver.

CONFIG_ETH_USE_OPENETH

Support OpenCores Ethernet MAC (for use with QEMU)

Found in: Component config > Ethernet

OpenCores Ethernet MAC driver can be used when an ESP-IDF application is executed in QEMU. This driver is not supported when running on a real chip.

Default value:

- No (disabled)

Contains:

- *CONFIG_ETH_OPENETH_DMA_RX_BUFFER_NUM*
- *CONFIG_ETH_OPENETH_DMA_TX_BUFFER_NUM*

CONFIG_ETH_OPENETH_DMA_RX_BUFFER_NUM

Number of Ethernet DMA Rx buffers

Found in: Component config > Ethernet > CONFIG_ETH_USE_OPENETH

Number of DMA receive buffers, each buffer is 1600 bytes.

Range:

- from 1 to 64 if *CONFIG_ETH_USE_OPENETH*

Default value:

- 4 if *CONFIG_ETH_USE_OPENETH*

CONFIG_ETH_OPENETH_DMA_TX_BUFFER_NUM

Number of Ethernet DMA Tx buffers

Found in: Component config > Ethernet > CONFIG_ETH_USE_OPENETH

Number of DMA transmit buffers, each buffer is 1600 bytes.

Range:
- from 1 to 64 if *CONFIG_ETH_USE_OPENETH*

Default value:
- 1 if *CONFIG_ETH_USE_OPENETH*

Event Loop Library Contains:

- *CONFIG_ESP_EVENT_LOOP_PROFILING*
- *CONFIG_ESP_EVENT_POST_FROM_ISR*

CONFIG_ESP_EVENT_LOOP_PROFILING

Enable event loop profiling

Found in: Component config > Event Loop Library

Enables collections of statistics in the event loop library such as the number of events posted to/recieved by an event loop, number of callbacks involved, number of events dropped to to a full event loop queue, run time of event handlers, and number of times/run time of each event handler.

Default value:
- No (disabled)

CONFIG_ESP_EVENT_POST_FROM_ISR

Support posting events from ISRs

Found in: Component config > Event Loop Library

Enable posting events from interrupt handlers.

Default value:
- Yes (enabled)

CONFIG_ESP_EVENT_POST_FROM_IRAM_ISR

Support posting events from ISRs placed in IRAM

Found in: Component config > Event Loop Library > CONFIG_ESP_EVENT_POST_FROM_ISR

Enable posting events from interrupt handlers placed in IRAM. Enabling this option places API functions esp_event_post and esp_event_post_to in IRAM.

Default value:
- Yes (enabled)

GDB Stub Contains:

- *CONFIG_ESP_GDBSTUB_SUPPORT_TASKS*

CONFIG_ESP_GDBSTUB_SUPPORT_TASKS

Enable listing FreeRTOS tasks through GDB Stub

Found in: Component config > GDB Stub

If enabled, GDBStub can supply the list of FreeRTOS tasks to GDB. Thread list can be queried from GDB using ‘info threads’ command. Note that if GDB task lists were corrupted, this feature may not work. If GDBStub fails, try disabling this feature.

CONFIG_ESP_GDBSTUB_MAX_TASKS

Maximum number of tasks supported by GDB Stub

Found in: Component config > GDB Stub > CONFIG_ESP_GDBSTUB_SUPPORT_TASKS

Set the number of tasks which GDB Stub will support.

Default value:

- 32 if *CONFIG_ESP_GDBSTUB_SUPPORT_TASKS*

ESP HTTP client

Contains:

- *CONFIG_ESP_HTTP_CLIENT_ENABLE_BASIC_AUTH*
- *CONFIG_ESP_HTTP_CLIENT_ENABLE_DIGEST_AUTH*
- *CONFIG_ESP_HTTP_CLIENT_ENABLE_HTTPS*

CONFIG_ESP_HTTP_CLIENT_ENABLE_HTTPS

Enable https

Found in: Component config > ESP HTTP client

This option will enable https protocol by linking esp-tls library and initializing SSL transport

Default value:

- Yes (enabled)

CONFIG_ESP_HTTP_CLIENT_ENABLE_BASIC_AUTH

Enable HTTP Basic Authentication

Found in: Component config > ESP HTTP client

This option will enable HTTP Basic Authentication. It is disabled by default as Basic auth uses unencrypted encoding, so it introduces a vulnerability when not using TLS

Default value:

- No (disabled)

CONFIG_ESP_HTTP_CLIENT_ENABLE_DIGEST_AUTH

Enable HTTP Digest Authentication

Found in: Component config > ESP HTTP client

This option will enable HTTP Digest Authentication. It is enabled by default, but use of this configuration is not recommended as the password can be derived from the exchange, so it introduces a vulnerability when not using TLS

Default value:

- Yes (enabled)

HTTP Server Contains:

- *CONFIG_HTTPD_PURGE_BUF_LEN*
- *CONFIG_HTTPD_LOG_PURGE_DATA*
- *CONFIG_HTTPD_MAX_REQ_HDR_LEN*
- *CONFIG_HTTPD_MAX_URI_LEN*
- *CONFIG_HTTPD_ERR_RESP_NO_DELAY*
- *CONFIG_HTTPD_WS_SUPPORT*

CONFIG_HTTPD_MAX_REQ_HDR_LEN

Max HTTP Request Header Length

Found in: Component config > HTTP Server

This sets the maximum supported size of headers section in HTTP request packet to be processed by the server

Default value:

- 512

CONFIG_HTTPD_MAX_URI_LEN

Max HTTP URI Length

Found in: Component config > HTTP Server

This sets the maximum supported size of HTTP request URI to be processed by the server

Default value:

- 512

CONFIG_HTTPD_ERR_RESP_NO_DELAY

Use TCP_NODELAY socket option when sending HTTP error responses

Found in: Component config > HTTP Server

Using TCP_NODEALY socket option ensures that HTTP error response reaches the client before the underlying socket is closed. Please note that turning this off may cause multiple test failures

Default value:

- Yes (enabled)

CONFIG_HTTPD_PURGE_BUF_LEN

Length of temporary buffer for purging data

Found in: Component config > HTTP Server

This sets the size of the temporary buffer used to receive and discard any remaining data that is received from the HTTP client in the request, but not processed as part of the server HTTP request handler.

If the remaining data is larger than the available buffer size, the buffer will be filled in multiple iterations. The buffer should be small enough to fit on the stack, but large enough to avoid excessive iterations.

Default value:

- 32

CONFIG_HTTPD_LOG_PURGE_DATA

Log purged content data at Debug level

Found in: Component config > HTTP Server

Enabling this will log discarded binary HTTP request data at Debug level. For large content data this may not be desirable as it will clutter the log.

Default value:

- No (disabled)

CONFIG_HTTPD_WS_SUPPORT

WebSocket server support

Found in: Component config > HTTP Server

This sets the WebSocket server support.

Default value:

- No (disabled)

ESP HTTPS OTA

Contains:

- *CONFIG_OTA_ALLOW_HTTP*

CONFIG_OTA_ALLOW_HTTP

Allow HTTP for OTA (WARNING: ONLY FOR TESTING PURPOSE, READ HELP)

Found in: Component config > ESP HTTPS OTA

It is highly recommended to keep HTTPS (along with server certificate validation) enabled. Enabling this option comes with potential risk of: - Non-encrypted communication channel with server - Accepting firmware upgrade image from server with fake identity

Default value:

- No (disabled)

ESP HTTPS server

Contains:

- *CONFIG_ESP_HTTPS_SERVER_ENABLE*

CONFIG_ESP_HTTPS_SERVER_ENABLE

Enable ESP_HTTPS_SERVER component

Found in: Component config > ESP HTTPS server

Enable ESP HTTPS server component

Hardware Settings

Contains:

- *MAC Config*
- *RTC Clock Config*
- *Sleep Config*

MAC Config

Contains:

- *CONFIG_ESP32_UNIVERSAL_MAC_ADDRESSES*

CONFIG_ESP32_UNIVERSAL_MAC_ADDRESSES

Number of universally administered (by IEEE) MAC address

Found in: Component config > Hardware Settings > MAC Config

Configure the number of universally administered (by IEEE) MAC addresses. During initialization, MAC addresses for each network interface are generated or derived from a single base MAC address. If the number of universal MAC addresses is four, all four interfaces (WiFi station, WiFi softap, Bluetooth and Ethernet) receive a universally administered MAC address. These are generated sequentially by adding 0, 1, 2 and 3 (respectively) to the final octet of the base MAC address. If the number of universal MAC addresses is two, only two interfaces (WiFi station and Bluetooth) receive a universally administered MAC address. These are generated sequentially by adding 0 and 1 (respectively) to the base MAC address. The remaining two interfaces (WiFi softap and Ethernet) receive local MAC addresses. These are derived from the universal WiFi station and Bluetooth MAC addresses, respectively. When using the default (Espressif-assigned) base MAC address, either setting can be used. When using a custom universal MAC address range, the correct setting will depend on the allocation of MAC addresses in this range (either 2 or 4 per device.)

Available options:

- Two (ESP32_UNIVERSAL_MAC_ADDRESSES_TWO)
- Four (ESP32_UNIVERSAL_MAC_ADDRESSES_FOUR)

Sleep Config Contains:

- *CONFIG_ESP_SLEEP_MSPI_NEED_ALL_IO_PU*
- *CONFIG_ESP_SLEEP_FLASH_LEAKAGE_WORKAROUND*
- *CONFIG_ESP_SLEEP_GPIO_RESET_WORKAROUND*
- *CONFIG_ESP_SLEEP_POWER_DOWN_FLASH*
- *CONFIG_ESP_SLEEP_PSRAM_LEAKAGE_WORKAROUND*

CONFIG_ESP_SLEEP_POWER_DOWN_FLASH

Power down flash in light sleep when there is no SPIRAM

Found in: Component config > Hardware Settings > Sleep Config

If enabled, chip will try to power down flash as part of esp_light_sleep_start(), which costs more time when chip wakes up. Can only be enabled if there is no SPIRAM configured.

This option will power down flash under a strict but relatively safe condition. Also, it is possible to power down flash under a relaxed condition by using esp_sleep_pd_config() to set ESP_PD_DOMAIN_VDDSDIO to ESP_PD_OPTION_OFF. It should be noted that there is a risk in powering down flash, you can refer *ESP-IDF Programming Guide/API Reference/System API/Sleep Modes/Power-down of Flash* for more details.

Default value:

- No (disabled)

CONFIG_ESP_SLEEP_GPIO_RESET_WORKAROUND

light sleep GPIO reset workaround

Found in: Component config > Hardware Settings > Sleep Config

esp32c3, esp32s3 and esp32h2 will reset at wake-up if GPIO is received a small electrostatic pulse during light sleep, with specific condition

- GPIO needs to be configured as input-mode only
- The pin receives a small electrostatic pulse, and reset occurs when the pulse voltage is higher than 6 V

For GPIO set to input mode only, it is not a good practice to leave it open/floating, The hardware design needs to controlled it with determined supply or ground voltage is necessary.

This option provides a software workaround for this issue. Configure to isolate all GPIO pins in sleep state.

CONFIG_ESP_SLEEP_PSRAM_LEAKAGE_WORKAROUND

PSRAM leakage current workaround in light sleep

Found in: Component config > Hardware Settings > Sleep Config

When the CS pin of SPIRAM is not pulled up, the sleep current will increase during light sleep. If the CS pin of SPIRAM has an external pull-up, you do not need to select this option, otherwise, you should enable this option.

CONFIG_ESP_SLEEP_FLASH_LEAKAGE_WORKAROUND

Flash leakage current workaround in light sleep

Found in: Component config > Hardware Settings > Sleep Config

When the CS pin of Flash is not pulled up, the sleep current will increase during light sleep. If the CS pin of Flash has an external pull-up, you do not need to select this option, otherwise, you should enable this option.

Default value:

- Yes (enabled)

CONFIG_ESP_SLEEP_MSPI_NEED_ALL_IO_PU

All pins of mspi need pull up

Found in: Component config > Hardware Settings > Sleep Config

To reduce leakage current, some types of SPI Flash/RAM only need to pull up the CS pin during light sleep. But there are also some kinds of SPI Flash/RAM that need to pull up all pins. It depends on the SPI Flash/RAM chip used.

RTC Clock Config

IPC (Inter-Processor Call)

Contains:

- *CONFIG_ESP_IPC_TASK_STACK_SIZE*
- *CONFIG_ESP_IPC_USES_CALLERS_PRIORITY*

CONFIG_ESP_IPC_TASK_STACK_SIZE

Inter-Processor Call (IPC) task stack size

Found in: Component config > IPC (Inter-Processor Call)

Configure the IPC tasks stack size. An IPC task runs on each core (in dual core mode), and allows for cross-core function calls. See IPC documentation for more details. The default IPC stack size should be enough for most common simple use cases. However, users can increase/decrease the stack size to their needs.

Range:

- from 512 to 65536

Default value:

- 1536

CONFIG_ESP_IPC_USES_CALLERS_PRIORITY

IPC runs at caller’ s priority

Found in: Component config > IPC (Inter-Processor Call)

If this option is not enabled then the IPC task will keep behavior same as prior to that of ESP-IDF v4.0, hence IPC task will run at (configMAX_PRIORITIES - 1) priority.

Default value:

- Yes (enabled) if *CONFIG_FREERTOS_UNICORE*

LCD and Touch Panel

Contains:

- *LCD Peripheral Configuration*

LCD Peripheral Configuration

Contains:

- *CONFIG_LCD_PANEL_IO_FORMAT_BUF_SIZE*

CONFIG_LCD_PANEL_IO_FORMAT_BUF_SIZE

LCD panel io format buffer size

Found in: Component config > LCD and Touch Panel > LCD Peripheral Configuration

LCD driver allocates an internal buffer to transform the data into a proper format, because of the endian order mismatch. This option is to set the size of the buffer, in bytes.

Default value:

- 32

ESP NETIF Adapter

Contains:

- *CONFIG_ESP_NETIF_TCPIP_ADAPTER_COMPATIBLE_LAYER*
- *CONFIG_ESP_NETIF_IP_LOST_TIMER_INTERVAL*
- *CONFIG_ESP_NETIF_USE_TCPIP_STACK_LIB*

CONFIG_ESP_NETIF_IP_LOST_TIMER_INTERVAL

IP Address lost timer interval (seconds)

Found in: Component config > ESP NETIF Adapter

The value of 0 indicates the IP lost timer is disabled, otherwise the timer is enabled.

The IP address may be lost because of some reasons, e.g. when the station disconnects from soft-AP, or when DHCP IP renew fails etc. If the IP lost timer is enabled, it will be started everytime the IP is lost. Event SYSTEM_EVENT_STA_LOST_IP will be raised if the timer expires. The IP lost timer is stopped if the station get the IP again before the timer expires.

Range:

- from 0 to 65535

Default value:

- 120

CONFIG_ESP_NETIF_USE_TCPIP_STACK_LIB

TCP/IP Stack Library

Found in: Component config > ESP NETIF Adapter

Choose the TCP/IP Stack to work, for example, LwIP, uIP, etc.

Available options:

- LwIP (ESP_NETIF_TCPIP_LWIP)
  lwIP is a small independent implementation of the TCP/IP protocol suite.
- Loopback (ESP_NETIF_LOOPBACK)
  Dummy implementation of esp-netif functionality which connects driver transmit to receive function. This option is for testing purpose only

CONFIG_ESP_NETIF_TCPIP_ADAPTER_COMPATIBLE_LAYER

Enable backward compatible tcpip_adapter interface

Found in: Component config > ESP NETIF Adapter

Backward compatible interface to tcpip_adapter is enabled by default to support legacy TCP/IP stack initialisation code. Disable this option to use only esp-netif interface.

Default value:

- Yes (enabled)

PHY Contains:

- *CONFIG_ESP_PHY_MAX_WIFI_TX_POWER*
- *CONFIG_ESP_PHY_REDUCE_TX_POWER*
- *CONFIG_ESP_PHY_CALIBRATION_AND_DATA_STORAGE*
- *CONFIG_ESP_PHY_INIT_DATA_IN_PARTITION*

CONFIG_ESP_PHY_CALIBRATION_AND_DATA_STORAGE

Store phy calibration data in NVS

Found in: Component config > PHY

If this option is enabled, NVS will be initialized and calibration data will be loaded from there. PHY calibration will be skipped on deep sleep wakeup. If calibration data is not found, full calibration will be performed and stored in NVS. Normally, only partial calibration will be performed. If this option is disabled, full calibration will be performed.

If it’s easy that your board calibrate bad data, choose ‘n’. Two cases for example, you should choose ‘n’: 1.If your board is easy to be booted up with antenna disconnected. 2.Because of your board design, each time when you do calibration, the result are too unstable. If unsure, choose ‘y’.

Default value:

- Yes (enabled)

CONFIG_ESP_PHY_INIT_DATA_IN_PARTITION

Use a partition to store PHY init data

Found in: Component config > PHY

If enabled, PHY init data will be loaded from a partition. When using a custom partition table, make sure that PHY data partition is included (type: ‘data’, subtype: ‘phy’). With default partition tables, this is done automatically. If PHY init data is stored in a partition, it has to be flashed there, otherwise runtime error will occur.

If this option is not enabled, PHY init data will be embedded into the application binary.

If unsure, choose ‘n’.

Default value:

- No (disabled)

Contains:

- *CONFIG_ESP_PHY_DEFAULT_INIT_IF_INVALID*
- *CONFIG_ESP_PHY_MULTIPLE_INIT_DATA_BIN*

CONFIG_ESP_PHY_DEFAULT_INIT_IF_INVALID

Reset default PHY init data if invalid

Found in: Component config > PHY > CONFIG_ESP_PHY_INIT_DATA_IN_PARTITION

If enabled, PHY init data will be restored to default if it cannot be verified successfully to avoid endless bootloops.

If unsure, choose ‘n’.

Default value:

- No (disabled) if *CONFIG_ESP_PHY_INIT_DATA_IN_PARTITION*

CONFIG_ESP_PHY_MULTIPLE_INIT_DATA_BIN

Support multiple PHY init data bin

Found in: Component config > PHY > CONFIG_ESP_PHY_INIT_DATA_IN_PARTITION

If enabled, the corresponding PHY init data type can be automatically switched according to the country code. China’s PHY init data bin is used by default. Can be modified by country information in API esp_wifi_set_country(). The priority of switching the PHY init data type is: 1. Country configured by API esp_wifi_set_country() and the parameter policy is WIFI_COUNTRY_POLICY_MANUAL. 2. Country notified by the connected AP. 3. Country configured by API esp_wifi_set_country() and the parameter policy is WIFI_COUNTRY_POLICY_AUTO.

Default value:

- No (disabled) if *CONFIG_ESP_PHY_INIT_DATA_IN_PARTITION* && *CONFIG_ESP_PHY_INIT_DATA_IN_PARTITION*

CONFIG_ESP_PHY_MULTIPLE_INIT_DATA_BIN_EMBED

Support embedded multiple phy init data bin to app bin

Found in: Component config > PHY > CONFIG_ESP_PHY_INIT_DATA_IN_PARTITION > CONFIG_ESP_PHY_MULTIPLE_INIT_DATA_BIN

If enabled, multiple phy init data bin will embedded into app bin If not enabled, multiple phy init data bin will still leave alone, and need to be flashed by users.

Default value:

- No (disabled) if *CONFIG_ESP_PHY_MULTIPLE_INIT_DATA_BIN* && *CONFIG_ESP_PHY_INIT_DATA_IN_PARTITION*

CONFIG_ESP_PHY_INIT_DATA_ERROR

Terminate operation when PHY init data error

Found in: Component config > PHY > CONFIG_ESP_PHY_INIT_DATA_IN_PARTITION > CONFIG_ESP_PHY_MULTIPLE_INIT_DATA_BIN

If enabled, when an error occurs while the PHY init data is updated, the program will terminate and restart. If not enabled, the PHY init data will not be updated when an error occurs.

Default value:

- No (disabled) if *CONFIG_ESP_PHY_MULTIPLE_INIT_DATA_BIN* && *CONFIG_ESP_PHY_INIT_DATA_IN_PARTITION*

CONFIG_ESP_PHY_MAX_WIFI_TX_POWER

Max WiFi TX power (dBm)

Found in: Component config > PHY

Set maximum transmit power for WiFi radio. Actual transmit power for high data rates may be lower than this setting.

Range:
- from 10 to 20

Default value:
- 20

CONFIG_ESP_PHY_REDUCE_TX_POWER

Reduce PHY TX power when brownout reset

Found in: Component config > PHY

When brownout reset occurs, reduce PHY TX power to keep the code running.

Default value:
- Yes (enabled)

Power Management Contains:

- *CONFIG_PM_SLP_DISABLE_GPIO*
- *CONFIG_PM_SLP_IRAM_OPT*
- *CONFIG_PM_RTOS_IDLE_OPT*
- *CONFIG_PM_ENABLE*

CONFIG_PM_ENABLE

Support for power management

Found in: Component config > Power Management

If enabled, application is compiled with support for power management. This option has run-time overhead (increased interrupt latency, longer time to enter idle state), and it also reduces accuracy of RTOS ticks and timers used for timekeeping. Enable this option if application uses power management APIs.

Default value:
- No (disabled)

CONFIG_PM_DFS_INIT_AUTO

Enable dynamic frequency scaling (DFS) at startup

Found in: Component config > Power Management > CONFIG_PM_ENABLE

If enabled, startup code configures dynamic frequency scaling. Max CPU frequency is set to DEFAULT_CPU_FREQ_MHZ setting, min frequency is set to XTAL frequency. If disabled, DFS will not be active until the application configures it using esp_pm_configure function.

Default value:
- No (disabled) if *CONFIG_PM_ENABLE*

CONFIG_PM_USE_RTC_TIMER_REF

Use RTC timer to prevent time drift (EXPERIMENTAL)

Found in: Component config > Power Management > CONFIG_PM_ENABLE

When APB clock frequency changes, high-resolution timer (esp_timer) scale and base value need to be adjusted. Each adjustment may cause small error, and over time such small errors may cause time drift. If this option is enabled, RTC timer will be used as a reference to compensate for the drift. It is recommended that this option is only used if 32k XTAL is selected as RTC clock source.

Default value:

- No (disabled) if *CONFIG_PM_ENABLE* && ESP_TIMER_IMPL_FRC2

CONFIG_PM_PROFILING

Enable profiling counters for PM locks

Found in: Component config > Power Management > CONFIG_PM_ENABLE

If enabled, esp_pm_* functions will keep track of the amount of time each of the power management locks has been held, and esp_pm_dump_locks function will print this information. This feature can be used to analyze which locks are preventing the chip from going into a lower power state, and see what time the chip spends in each power saving mode. This feature does incur some run-time overhead, so should typically be disabled in production builds.

Default value:

- No (disabled) if *CONFIG_PM_ENABLE*

CONFIG_PM_TRACE

Enable debug tracing of PM using GPIOs

Found in: Component config > Power Management > CONFIG_PM_ENABLE

If enabled, some GPIOs will be used to signal events such as RTOS ticks, frequency switching, entry/exit from idle state. Refer to pm_trace.c file for the list of GPIOs. This feature is intended to be used when analyzing/debugging behavior of power management implementation, and should be kept disabled in applications.

Default value:

- No (disabled) if *CONFIG_PM_ENABLE*

CONFIG_PM_SLP_IRAM_OPT

Put lightsleep related codes in internal RAM

Found in: Component config > Power Management

If enabled, about 1.8KB of lightsleep related source code would be in IRAM and chip would sleep longer for 760us at most each time. This feature is intended to be used when lower power consumption is needed while there is enough place in IRAM to place source code.

CONFIG_PM_RTOS_IDLE_OPT

Put RTOS IDLE related codes in internal RAM

Found in: Component config > Power Management

If enabled, about 260B of RTOS_IDLE related source code would be in IRAM and chip would sleep longer for 40us at most each time. This feature is intended to be used when lower power consumption is needed while there is enough place in IRAM to place source code.

CONFIG_PM_SLP_DISABLE_GPIO

Disable all GPIO when chip at sleep

Found in: Component config > Power Management

This feature is intended to disable all GPIO pins at automantic sleep to get a lower power mode. If enabled, chips will disable all GPIO pins at automantic sleep to reduce about 200~300 uA current. If you want to specifically use some pins normally as chip wakes when chip sleeps, you can call 'gpio_sleep_sel_dis' to disable this feature on those pins. You can also keep this feature on and call 'gpio_sleep_set_direction' and 'gpio_sleep_set_pull_mode' to have a different GPIO configuration at sleep. Waring: If you want to enable this option on ESP32, you should enable *GPIO_ESP32_SUPPORT_SWITCH_SLP_PULL* at first, otherwise you will not be able to switch pullup/pulldown mode.

ESP Ringbuf Contains:

- *CONFIG_RINGBUF_PLACE_ISR_FUNCTIONS_INTO_FLASH*
- *CONFIG_RINGBUF_PLACE_FUNCTIONS_INTO_FLASH*

CONFIG_RINGBUF_PLACE_FUNCTIONS_INTO_FLASH

Place non-ISR ringbuf functions into flash

Found in: Component config > ESP Ringbuf

Place non-ISR ringbuf functions (like xRingbufferCreate/xRingbufferSend) into flash. This frees up IRAM, but the functions can no longer be called when the cache is disabled.

Default value:

- No (disabled)

CONFIG_RINGBUF_PLACE_ISR_FUNCTIONS_INTO_FLASH

Place ISR ringbuf functions into flash

Found in: Component config > ESP Ringbuf

Place non-ISR ringbuf functions (like xRingbufferSendFromISR/xRingbufferReceiveFromISR) into flash. This frees up IRAM, but the functions can no longer be called when the cache is disabled or from an IRAM interrupt context.

This option is not compatible with ESP-IDF drivers which is configured to run the ISR from an IRAM context, e.g. CONFIG_UART_ISR_IN_IRAM.

Default value:

- No (disabled)

ESP System Settings Contains:

- *CONFIG_ESP_SYSTEM_RTC_EXT_XTAL_BOOTSTRAP_CYCLES*
- *CONFIG_ESP_CONSOLE_UART*
- *CONFIG_ESP_SYSTEM_ALLOW_RTC_FAST_MEM_AS_HEAP*
- *CONFIG_ESP_SYSTEM_EVENT_TASK_STACK_SIZE*
- *CONFIG_ESP_TASK_WDT*
- *CONFIG_ESP_SYSTEM_CHECK_INT_LEVEL*
- *CONFIG_ESP_INT_WDT*
- *CONFIG_ESP_MAIN_TASK_AFFINITY*
- *CONFIG_ESP_MAIN_TASK_STACK_SIZE*
- *Memory protection*
- *CONFIG_ESP_MINIMAL_SHARED_STACK_SIZE*
- *CONFIG_ESP_DEBUG_STUBS_ENABLE*

- *CONFIG_ESP_SYSTEM_PANIC*
- *CONFIG_ESP_PANIC_HANDLER_IRAM*
- *CONFIG_ESP_SYSTEM_EVENT_QUEUE_SIZE*
- *CONFIG_ESP_CONSOLE_UART_BAUDRATE*
- *CONFIG_ESP_CONSOLE_UART_NUM*
- *CONFIG_ESP_CONSOLE_UART_RX_GPIO*
- *CONFIG_ESP_CONSOLE_UART_TX_GPIO*

CONFIG_ESP_SYSTEM_PANIC

Panic handler behaviour

Found in: Component config > ESP System Settings

If FreeRTOS detects unexpected behaviour or an unhandled exception, the panic handler is invoked. Configure the panic handler's action here.

Available options:

- Print registers and halt (ESP_SYSTEM_PANIC_PRINT_HALT)
  Outputs the relevant registers over the serial port and halt the processor. Needs a manual reset to restart.
- Print registers and reboot (ESP_SYSTEM_PANIC_PRINT_REBOOT)
  Outputs the relevant registers over the serial port and immediately reset the processor.
- Silent reboot (ESP_SYSTEM_PANIC_SILENT_REBOOT)
  Just resets the processor without outputting anything
- GDBStub on panic (ESP_SYSTEM_PANIC_GDBSTUB)
  Invoke gdbstub on the serial port, allowing for gdb to attach to it to do a postmortem of the crash.
- GDBStub at runtime (ESP_SYSTEM_GDBSTUB_RUNTIME)
  Invoke gdbstub on the serial port, allowing for gdb to attach to it and to do a debug on runtime. This feature will switch system to single core mode.

CONFIG_ESP_SYSTEM_RTC_EXT_XTAL_BOOTSTRAP_CYCLES

Bootstrap cycles for external 32kHz crystal

Found in: Component config > ESP System Settings

To reduce the startup time of an external RTC crystal, we bootstrap it with a 32kHz square wave for a fixed number of cycles. Setting 0 will disable bootstrapping (if disabled, the crystal may take longer to start up or fail to oscillate under some conditions).

If this value is too high, a faulty crystal may initially start and then fail. If this value is too low, an otherwise good crystal may not start.

To accurately determine if the crystal has started, set a larger "Number of cycles for RTC_SLOW_CLK calibration" (about 3000).

CONFIG_ESP_SYSTEM_ALLOW_RTC_FAST_MEM_AS_HEAP

Enable RTC fast memory for dynamic allocations

Found in: Component config > ESP System Settings

This config option allows to add RTC fast memory region to system heap with capability similar to that of DRAM region but without DMA. This memory will be consumed first per heap initialization order by early startup services and scheduler related code. Speed wise RTC fast memory operates on APB clock and hence does not have much performance impact.

Memory protection

Contains:

- *CONFIG_ESP_SYSTEM_MEMPROT_FEATURE*

CONFIG_ESP_SYSTEM_MEMPROT_FEATURE

Enable memory protection

Found in: Component config > ESP System Settings > Memory protection

If enabled, the permission control module watches all the memory access and fires the panic handler if a permission violation is detected. This feature automatically splits the SRAM memory into data and instruction segments and sets Read/Execute permissions for the instruction part (below given splitting address) and Read/Write permissions for the data part (above the splitting address). The memory protection is effective on all access through the IRAM0 and DRAM0 buses.

CONFIG_ESP_SYSTEM_MEMPROT_FEATURE_LOCK

Lock memory protection settings

Found in: Component config > ESP System Settings > Memory protection > CONFIG_ESP_SYSTEM_MEMPROT_FEATURE

Once locked, memory protection settings cannot be changed anymore. The lock is reset only on the chip startup.

Default value:

- Yes (enabled) if *CONFIG_ESP_SYSTEM_MEMPROT_FEATURE*

CONFIG_ESP_SYSTEM_EVENT_QUEUE_SIZE

System event queue size

Found in: Component config > ESP System Settings

Config system event queue size in different application.

Default value:

- 32

CONFIG_ESP_SYSTEM_EVENT_TASK_STACK_SIZE

Event loop task stack size

Found in: Component config > ESP System Settings

Config system event task stack size in different application.

Default value:

- 2304

CONFIG_ESP_MAIN_TASK_STACK_SIZE

Main task stack size

Found in: Component config > ESP System Settings

Configure the "main task" stack size. This is the stack of the task which calls app_main(). If app_main() returns then this task is deleted and its stack memory is freed.

Default value:

- 3584

CONFIG_ESP_MAIN_TASK_AFFINITY

Main task core affinity

Found in: Component config > ESP System Settings

Configure the "main task" core affinity. This is the used core of the task which calls app_main(). If app_main() returns then this task is deleted.

Available options:

- CPU0 (ESP_MAIN_TASK_AFFINITY_CPU0)
- CPU1 (ESP_MAIN_TASK_AFFINITY_CPU1)
- No affinity (ESP_MAIN_TASK_AFFINITY_NO_AFFINITY)

CONFIG_ESP_MINIMAL_SHARED_STACK_SIZE

Minimal allowed size for shared stack

Found in: Component config > ESP System Settings

Minimal value of size, in bytes, accepted to execute a expression with shared stack.

Default value:

- 2048

CONFIG_ESP_CONSOLE_UART

Channel for console output

Found in: Component config > ESP System Settings

Select where to send console output (through stdout and stderr).

- Default is to use UART0 on pre-defined GPIOs.
- If "Custom" is selected, UART0 or UART1 can be chosen, and any pins can be selected.
- If "None" is selected, there will be no console output on any UART, except for initial output from ROM bootloader. This ROM output can be suppressed by GPIO strapping or EFUSE, refer to chip datasheet for details.
- On chips with USB OTG peripheral, "USB CDC" option redirects output to the CDC port. This option uses the CDC driver in the chip ROM. This option is incompatible with TinyUSB stack.
- On chips with an USB serial/JTAG debug controller, selecting the option for that redirects output to the CDC/ACM (serial port emulation) component of that device.

Available options:

- Default: UART0 (ESP_CONSOLE_UART_DEFAULT)
- USB CDC (ESP_CONSOLE_USB_CDC)
- USB Serial/JTAG Controller (ESP_CONSOLE_USB_SERIAL_JTAG)
- Custom UART (ESP_CONSOLE_UART_CUSTOM)
- None (ESP_CONSOLE_NONE)

CONFIG_ESP_CONSOLE_UART_NUM

UART peripheral to use for console output (0-1)

Found in: Component config > ESP System Settings

This UART peripheral is used for console output from the ESP-IDF Bootloader and the app.

If the configuration is different in the Bootloader binary compared to the app binary, UART is reconfigured after the bootloader exits and the app starts.

Due to an ESP32 ROM bug, UART2 is not supported for console output via esp_rom_printf.

Available options:

- UART0 (ESP_CONSOLE_UART_CUSTOM_NUM_0)

- UART1 (ESP_CONSOLE_UART_CUSTOM_NUM_1)

CONFIG_ESP_CONSOLE_UART_TX_GPIO

UART TX on GPIO#

Found in: Component config > ESP System Settings

This GPIO is used for console UART TX output in the ESP-IDF Bootloader and the app (including boot log output and default standard output and standard error of the app).

If the configuration is different in the Bootloader binary compared to the app binary, UART is reconfigured after the bootloader exits and the app starts.

Range:
- from 0 to 46 if ESP_CONSOLE_UART_CUSTOM

Default value:
- 1 if ESP_CONSOLE_UART_CUSTOM
- 43 if ESP_CONSOLE_UART_CUSTOM

CONFIG_ESP_CONSOLE_UART_RX_GPIO

UART RX on GPIO#

Found in: Component config > ESP System Settings

This GPIO is used for UART RX input in the ESP-IDF Bootloader and the app (including default default standard input of the app).

Note: The default ESP-IDF Bootloader configures this pin but doesn't read anything from the UART.

If the configuration is different in the Bootloader binary compared to the app binary, UART is reconfigured after the bootloader exits and the app starts.

Range:
- from 0 to 46 if ESP_CONSOLE_UART_CUSTOM

Default value:
- 3 if ESP_CONSOLE_UART_CUSTOM
- 44 if ESP_CONSOLE_UART_CUSTOM

CONFIG_ESP_CONSOLE_UART_BAUDRATE

UART console baud rate

Found in: Component config > ESP System Settings

This baud rate is used by both the ESP-IDF Bootloader and the app (including boot log output and default standard input/output/error of the app).

The app's maximum baud rate depends on the UART clock source. If Power Management is disabled, the UART clock source is the APB clock and all baud rates in the available range will be sufficiently accurate. If Power Management is enabled, REF_TICK clock source is used so the baud rate is divided from 1MHz. Baud rates above 1Mbps are not possible and values between 500Kbps and 1Mbps may not be accurate.

If the configuration is different in the Bootloader binary compared to the app binary, UART is reconfigured after the bootloader exits and the app starts.

Range:
- from 1200 to 4000000 if *CONFIG_PM_ENABLE*
- from 1200 to 1000000 if *CONFIG_PM_ENABLE*

Default value:
- 115200

CONFIG_ESP_INT_WDT

Interrupt watchdog

Found in: Component config > ESP System Settings

This watchdog timer can detect if the FreeRTOS tick interrupt has not been called for a certain time, either because a task turned off interrupts and did not turn them on for a long time, or because an interrupt handler did not return. It will try to invoke the panic handler first and failing that reset the SoC.

Default value:

- Yes (enabled)

CONFIG_ESP_INT_WDT_TIMEOUT_MS

Interrupt watchdog timeout (ms)

Found in: Component config > ESP System Settings > CONFIG_ESP_INT_WDT

The timeout of the watchdog, in miliseconds. Make this higher than the FreeRTOS tick rate.

Range:

- from 10 to 10000

Default value:

- 300 if *CONFIG_ESP32_SPIRAM_SUPPORT* && *CONFIG_ESP_INT_WDT*
- 800 if *CONFIG_ESP32_SPIRAM_SUPPORT* && *CONFIG_ESP_INT_WDT*

CONFIG_ESP_INT_WDT_CHECK_CPU1

Also watch CPU1 tick interrupt

Found in: Component config > ESP System Settings > CONFIG_ESP_INT_WDT

Also detect if interrupts on CPU 1 are disabled for too long.

Default value:

- Yes (enabled) if *CONFIG_ESP_INT_WDT* && *CONFIG_FREERTOS_UNICORE*

CONFIG_ESP_TASK_WDT

Initialize Task Watchdog Timer on startup

Found in: Component config > ESP System Settings

The Task Watchdog Timer can be used to make sure individual tasks are still running. Enabling this option will cause the Task Watchdog Timer to be initialized automatically at startup. The Task Watchdog timer can be initialized after startup as well (see Task Watchdog Timer API Reference)

Default value:

- Yes (enabled)

CONFIG_ESP_TASK_WDT_PANIC

Invoke panic handler on Task Watchdog timeout

Found in: Component config > ESP System Settings > CONFIG_ESP_TASK_WDT

If this option is enabled, the Task Watchdog Timer will be configured to trigger the panic handler when it times out. This can also be configured at run time (see Task Watchdog Timer API Reference)

Default value:

- No (disabled)

CONFIG_ESP_TASK_WDT_TIMEOUT_S

Task Watchdog timeout period (seconds)

Found in: Component config > ESP System Settings > CONFIG_ESP_TASK_WDT

Timeout period configuration for the Task Watchdog Timer in seconds. This is also configurable at run time (see Task Watchdog Timer API Reference)

Range:
- from 1 to 60

Default value:
- 5

CONFIG_ESP_TASK_WDT_CHECK_IDLE_TASK_CPU0

Watch CPU0 Idle Task

Found in: Component config > ESP System Settings > CONFIG_ESP_TASK_WDT

If this option is enabled, the Task Watchdog Timer will watch the CPU0 Idle Task. Having the Task Watchdog watch the Idle Task allows for detection of CPU starvation as the Idle Task not being called is usually a symptom of CPU starvation. Starvation of the Idle Task is detrimental as FreeRTOS household tasks depend on the Idle Task getting some runtime every now and then.

Default value:
- Yes (enabled)

CONFIG_ESP_TASK_WDT_CHECK_IDLE_TASK_CPU1

Watch CPU1 Idle Task

Found in: Component config > ESP System Settings > CONFIG_ESP_TASK_WDT

If this option is enabled, the Task Wtachdog Timer will wach the CPU1 Idle Task.

Default value:
- Yes (enabled) if *CONFIG_ESP_TASK_WDT* && *CONFIG_FREERTOS_UNICORE*

CONFIG_ESP_PANIC_HANDLER_IRAM

Place panic handler code in IRAM

Found in: Component config > ESP System Settings

If this option is disabled (default), the panic handler code is placed in flash not IRAM. This means that if ESP-IDF crashes while flash cache is disabled, the panic handler will automatically re-enable flash cache before running GDB Stub or Core Dump. This adds some minor risk, if the flash cache status is also corrupted during the crash.

If this option is enabled, the panic handler code (including required UART functions) is placed in IRAM. This may be necessary to debug some complex issues with crashes while flash cache is disabled (for example, when writing to SPI flash) or when flash cache is corrupted when an exception is triggered.

Default value:
- No (disabled)

CONFIG_ESP_DEBUG_STUBS_ENABLE

OpenOCD debug stubs

Found in: Component config > ESP System Settings

Debug stubs are used by OpenOCD to execute pre-compiled onboard code which does some useful debugging stuff, e.g. GCOV data dump.

Default value:

- "COMPILER_OPTIMIZATION_LEVEL_DEBUG" if *CONFIG_ESP32_TRAX* && ESP32S2_TRAX && ESP32S3_TRAX

CONFIG_ESP_SYSTEM_CHECK_INT_LEVEL

Interrupt level to use for Interrupt Watchdog and other system checks

Found in: Component config > ESP System Settings

Interrupt level to use for Interrupt Watchdog and other system checks.

Available options:

- Level 5 interrupt (ESP_SYSTEM_CHECK_INT_LEVEL_5)
  Using level 5 interrupt for Interrupt Watchdog and other system checks.
- Level 4 interrupt (ESP_SYSTEM_CHECK_INT_LEVEL_4)
  Using level 4 interrupt for Interrupt Watchdog and other system checks.

High resolution timer (esp_timer) Contains:

- *CONFIG_ESP_TIMER_PROFILING*
- *CONFIG_ESP_TIMER_IMPL*
- *CONFIG_ESP_TIMER_TASK_STACK_SIZE*
- *CONFIG_ESP_TIMER_INTERRUPT_LEVEL*
- *CONFIG_ESP_TIMER_SUPPORTS_ISR_DISPATCH_METHOD*

CONFIG_ESP_TIMER_PROFILING

Enable esp_timer profiling features

Found in: Component config > High resolution timer (esp_timer)

If enabled, esp_timer_dump will dump information such as number of times the timer was started, number of times the timer has triggered, and the total time it took for the callback to run. This option has some effect on timer performance and the amount of memory used for timer storage, and should only be used for debugging/testing purposes.

Default value:

- No (disabled)

CONFIG_ESP_TIMER_TASK_STACK_SIZE

High-resolution timer task stack size

Found in: Component config > High resolution timer (esp_timer)

Configure the stack size of "timer_task" task. This task is used to dispatch callbacks of timers created using ets_timer and esp_timer APIs. If you are seing stack overflow errors in timer task, increase this value.

Note that this is not the same as FreeRTOS timer task. To configure FreeRTOS timer task size, see "FreeRTOS timer task stack size" option in "FreeRTOS" menu.

Range:

- from 2048 to 65536

Default value:

- 3584

CONFIG_ESP_TIMER_INTERRUPT_LEVEL

Interrupt level

Found in: Component config > High resolution timer (esp_timer)

It sets the interrupt level for esp_timer ISR in range 1..3. A higher level (3) helps to decrease the ISR esp_timer latency.

Range:
- from 1 to 3
- from 1 to 1

Default value:
- 1

CONFIG_ESP_TIMER_SUPPORTS_ISR_DISPATCH_METHOD

Support ISR dispatch method

Found in: Component config > High resolution timer (esp_timer)

Allows using ESP_TIMER_ISR dispatch method (ESP_TIMER_TASK dispatch method is also available). - ESP_TIMER_TASK - Timer callbacks are dispatched from a high-priority esp_timer task. - ESP_TIMER_ISR - Timer callbacks are dispatched directly from the timer interrupt handler. The ISR dispatch can be used, in some cases, when a callback is very simple or need a lower-latency.

Default value:
- No (disabled)

CONFIG_ESP_TIMER_IMPL

Hardware timer to use for esp_timer

Found in: Component config > High resolution timer (esp_timer)

esp_timer APIs can be implemented using different hardware timers.

- "FRC2 (legacy)" implementation has been used in ESP-IDF v2.x - v4.1.
- "LAC timer of Timer Group 0" implementation is simpler, and has smaller run time overhead because software handling of timer overflow is not needed.
- "SYSTIMER" implementation is similar to "LAC timer of Timer Group 0" but for non ESP32 chips.

Available options:
- FRC2 (legacy) timer (ESP_TIMER_IMPL_FRC2)
- LAC timer of Timer Group 0 (ESP_TIMER_IMPL_TG0_LAC)
- SYSTIMER (ESP_TIMER_IMPL_SYSTIMER)

Wi-Fi

Contains:

- *CONFIG_ESP32_WIFI_ENABLE_WPA3_SAE*
- *CONFIG_ESP32_WIFI_SOFTAP_BEACON_MAX_LEN*
- *CONFIG_ESP32_WIFI_CACHE_TX_BUFFER_NUM*
- *CONFIG_ESP32_WIFI_DYNAMIC_RX_BUFFER_NUM*
- *CONFIG_ESP32_WIFI_DYNAMIC_TX_BUFFER_NUM*
- *CONFIG_ESP32_WIFI_STATIC_RX_BUFFER_NUM*
- *CONFIG_ESP32_WIFI_STATIC_TX_BUFFER_NUM*
- *CONFIG_ESP_WIFI_STA_DISCONNECTED_PM_ENABLE*
- *CONFIG_ESP32_WIFI_SW_COEXIST_ENABLE*
- *CONFIG_ESP32_WIFI_TX_BUFFER*
- *CONFIG_ESP32_WIFI_AMPDU_RX_ENABLED*
- *CONFIG_ESP32_WIFI_AMPDU_TX_ENABLED*
- *CONFIG_ESP32_WIFI_AMSDU_TX_ENABLED*

- *CONFIG_ESP32_WIFI_CSI_ENABLED*
- *CONFIG_ESP_WIFI_GMAC_SUPPORT*
- *CONFIG_ESP32_WIFI_IRAM_OPT*
- *CONFIG_ESP32_WIFI_MGMT_SBUF_NUM*
- *CONFIG_ESP32_WIFI_NVS_ENABLED*
- *CONFIG_ESP32_WIFI_RX_IRAM_OPT*
- *CONFIG_ESP_WIFI_SLP_BEACON_LOST_OPT*
- *CONFIG_ESP_WIFI_SLP_IRAM_OPT*
- *CONFIG_ESP_WIFI_SOFTAP_SUPPORT*
- *CONFIG_ESP32_WIFI_TASK_CORE_ID*

CONFIG_ESP32_WIFI_SW_COEXIST_ENABLE

Software controls WiFi/Bluetooth coexistence

Found in: Component config > Wi-Fi

If enabled, WiFi & Bluetooth coexistence is controlled by software rather than hardware. Recommended for heavy traffic scenarios. Both coexistence configuration options are automatically managed, no user intervention is required. If only Bluetooth is used, it is recommended to disable this option to reduce binary file size.

Default value:

- Yes (enabled) if *CONFIG_BT_ENABLED*

CONFIG_ESP32_WIFI_STATIC_RX_BUFFER_NUM

Max number of WiFi static RX buffers

Found in: Component config > Wi-Fi

Set the number of WiFi static RX buffers. Each buffer takes approximately 1.6KB of RAM. The static rx buffers are allocated when esp_wifi_init is called, they are not freed until esp_wifi_deinit is called.

WiFi hardware use these buffers to receive all 802.11 frames. A higher number may allow higher throughput but increases memory use. If ESP32_WIFI_AMPDU_RX_ENABLED is enabled, this value is recommended to set equal or bigger than ESP32_WIFI_RX_BA_WIN in order to achieve better throughput and compatibility with both stations and APs.

Range:

- from 2 to 25

Default value:

- 10 if *CONFIG_SPIRAM_TRY_ALLOCATE_WIFI_LWIP*
- 16 if *CONFIG_SPIRAM_TRY_ALLOCATE_WIFI_LWIP*

CONFIG_ESP32_WIFI_DYNAMIC_RX_BUFFER_NUM

Max number of WiFi dynamic RX buffers

Found in: Component config > Wi-Fi

Set the number of WiFi dynamic RX buffers, 0 means unlimited RX buffers will be allocated (provided sufficient free RAM). The size of each dynamic RX buffer depends on the size of the received data frame.

For each received data frame, the WiFi driver makes a copy to an RX buffer and then delivers it to the high layer TCP/IP stack. The dynamic RX buffer is freed after the higher layer has successfully received the data frame.

For some applications, WiFi data frames may be received faster than the application can process them. In these cases we may run out of memory if RX buffer number is unlimited (0).

If a dynamic RX buffer limit is set, it should be at least the number of static RX buffers.

Range:
- from 0 to 128 if *CONFIG_LWIP_WND_SCALE*
- from 0 to 1024 if *CONFIG_LWIP_WND_SCALE*

Default value:
- 32

CONFIG_ESP32_WIFI_TX_BUFFER

Type of WiFi TX buffers

Found in: Component config > Wi-Fi

Select type of WiFi TX buffers:

If "Static" is selected, WiFi TX buffers are allocated when WiFi is initialized and released when WiFi is de-initialized. The size of each static TX buffer is fixed to about 1.6KB.

If "Dynamic" is selected, each WiFi TX buffer is allocated as needed when a data frame is delivered to the Wifi driver from the TCP/IP stack. The buffer is freed after the data frame has been sent by the WiFi driver. The size of each dynamic TX buffer depends on the length of each data frame sent by the TCP/IP layer.

If PSRAM is enabled, "Static" should be selected to guarantee enough WiFi TX buffers. If PSRAM is disabled, "Dynamic" should be selected to improve the utilization of RAM.

Available options:
- Static (ESP32_WIFI_STATIC_TX_BUFFER)
- Dynamic (ESP32_WIFI_DYNAMIC_TX_BUFFER)

CONFIG_ESP32_WIFI_STATIC_TX_BUFFER_NUM

Max number of WiFi static TX buffers

Found in: Component config > Wi-Fi

Set the number of WiFi static TX buffers. Each buffer takes approximately 1.6KB of RAM. The static RX buffers are allocated when esp_wifi_init() is called, they are not released until esp_wifi_deinit() is called.

For each transmitted data frame from the higher layer TCP/IP stack, the WiFi driver makes a copy of it in a TX buffer. For some applications especially UDP applications, the upper layer can deliver frames faster than WiFi layer can transmit. In these cases, we may run out of TX buffers.

Range:
- from 1 to 64 if ESP32_WIFI_STATIC_TX_BUFFER

Default value:
- 16 if ESP32_WIFI_STATIC_TX_BUFFER

CONFIG_ESP32_WIFI_CACHE_TX_BUFFER_NUM

Max number of WiFi cache TX buffers

Found in: Component config > Wi-Fi

Set the number of WiFi cache TX buffer number.

For each TX packet from uplayer, such as LWIP etc, WiFi driver needs to allocate a static TX buffer and makes a copy of uplayer packet. If WiFi driver fails to allocate the static TX buffer, it caches the uplayer packets to a dedicated buffer queue, this option is used to configure the size of the cached TX queue.

Range:
- from 16 to 128 if *CONFIG_ESP32_SPIRAM_SUPPORT* || ESP32S2_SPIRAM_SUPPORT || ESP32S3_SPIRAM_SUPPORT

Default value:

- 32 if *CONFIG_ESP32_SPIRAM_SUPPORT* || ESP32S2_SPIRAM_SUPPORT || ESP32S3_SPIRAM_SUPPORT

CONFIG_ESP32_WIFI_DYNAMIC_TX_BUFFER_NUM

Max number of WiFi dynamic TX buffers

Found in: Component config > Wi-Fi

Set the number of WiFi dynamic TX buffers. The size of each dynamic TX buffer is not fixed, it depends on the size of each transmitted data frame.

For each transmitted frame from the higher layer TCP/IP stack, the WiFi driver makes a copy of it in a TX buffer. For some applications, especially UDP applications, the upper layer can deliver frames faster than WiFi layer can transmit. In these cases, we may run out of TX buffers.

Range:

- from 1 to 128

Default value:

- 32

CONFIG_ESP32_WIFI_CSI_ENABLED

WiFi CSI(Channel State Information)

Found in: Component config > Wi-Fi

Select this option to enable CSI(Channel State Information) feature. CSI takes about CONFIG_ESP32_WIFI_STATIC_RX_BUFFER_NUM KB of RAM. If CSI is not used, it is better to disable this feature in order to save memory.

Default value:

- No (disabled)

CONFIG_ESP32_WIFI_AMPDU_TX_ENABLED

WiFi AMPDU TX

Found in: Component config > Wi-Fi

Select this option to enable AMPDU TX feature

Default value:

- Yes (enabled)

CONFIG_ESP32_WIFI_TX_BA_WIN

WiFi AMPDU TX BA window size

Found in: Component config > Wi-Fi > CONFIG_ESP32_WIFI_AMPDU_TX_ENABLED

Set the size of WiFi Block Ack TX window. Generally a bigger value means higher throughput but more memory. Most of time we should NOT change the default value unless special reason, e.g. test the maximum UDP TX throughput with iperf etc. For iperf test in shieldbox, the recommended value is 9~12.

Range:

- from 2 to 32

Default value:

- 6

CONFIG_ESP32_WIFI_AMPDU_RX_ENABLED

WiFi AMPDU RX

Found in: Component config > Wi-Fi

Select this option to enable AMPDU RX feature

Default value:

- Yes (enabled)

CONFIG_ESP32_WIFI_RX_BA_WIN

WiFi AMPDU RX BA window size

Found in: Component config > Wi-Fi > CONFIG_ESP32_WIFI_AMPDU_RX_ENABLED

Set the size of WiFi Block Ack RX window. Generally a bigger value means higher throughput and better compatibility but more memory. Most of time we should NOT change the default value unless special reason, e.g. test the maximum UDP RX throughput with iperf etc. For iperf test in shieldbox, the recommended value is 9~12. If PSRAM is used and WiFi memory is prefered to allocat in PSRAM first, the default and minimum value should be 16 to achieve better throughput and compatibility with both stations and APs.

Range:

- from 2 to 32

Default value:

- 6 if *CONFIG_SPIRAM_TRY_ALLOCATE_WIFI_LWIP* && *CONFIG_ESP32_WIFI_AMPDU_RX_ENABLED*
- 16 if *CONFIG_SPIRAM_TRY_ALLOCATE_WIFI_LWIP* && *CONFIG_ESP32_WIFI_AMPDU_RX_ENABLED*

CONFIG_ESP32_WIFI_AMSDU_TX_ENABLED

WiFi AMSDU TX

Found in: Component config > Wi-Fi

Select this option to enable AMSDU TX feature

Default value:

- No (disabled) if *CONFIG_ESP32_SPIRAM_SUPPORT* || ESP32S2_SPIRAM_SUPPORT || ESP32S3_SPIRAM_SUPPORT

CONFIG_ESP32_WIFI_NVS_ENABLED

WiFi NVS flash

Found in: Component config > Wi-Fi

Select this option to enable WiFi NVS flash

Default value:

- Yes (enabled)

CONFIG_ESP32_WIFI_TASK_CORE_ID

WiFi Task Core ID

Found in: Component config > Wi-Fi

Pinned WiFi task to core 0 or core 1.

Available options:

- Core 0 (ESP32_WIFI_TASK_PINNED_TO_CORE_0)

- Core 1 (ESP32_WIFI_TASK_PINNED_TO_CORE_1)

CONFIG_ESP32_WIFI_SOFTAP_BEACON_MAX_LEN

Max length of WiFi SoftAP Beacon

Found in: Component config > Wi-Fi

ESP-MESH utilizes beacon frames to detect and resolve root node conflicts (see documentation). However the default length of a beacon frame can simultaneously hold only five root node identifier structures, meaning that a root node conflict of up to five nodes can be detected at one time. In the occurence of more root nodes conflict involving more than five root nodes, the conflict resolution process will detect five of the root nodes, resolve the conflict, and re-detect more root nodes. This process will repeat until all root node conflicts are resolved. However this process can generally take a very long time.

To counter this situation, the beacon frame length can be increased such that more root nodes can be detected simultaneously. Each additional root node will require 36 bytes and should be added ontop of the default beacon frame length of 752 bytes. For example, if you want to detect 10 root nodes simultaneously, you need to set the beacon frame length as 932 (752+36*5).

Setting a longer beacon length also assists with debugging as the conflicting root nodes can be identified more quickly.

Range:
- from 752 to 1256

Default value:
- 752

CONFIG_ESP32_WIFI_MGMT_SBUF_NUM

WiFi mgmt short buffer number

Found in: Component config > Wi-Fi

Set the number of WiFi management short buffer.

Range:
- from 6 to 32

Default value:
- 32

CONFIG_ESP32_WIFI_IRAM_OPT

WiFi IRAM speed optimization

Found in: Component config > Wi-Fi

Select this option to place frequently called Wi-Fi library functions in IRAM. When this option is disabled, more than 10Kbytes of IRAM memory will be saved but Wi-Fi throughput will be reduced.

Default value:
- No (disabled) if *CONFIG_BT_ENABLED* && *CONFIG_ESP32_SPIRAM_SUPPORT*
- Yes (enabled)

CONFIG_ESP32_WIFI_RX_IRAM_OPT

WiFi RX IRAM speed optimization

Found in: Component config > Wi-Fi

Select this option to place frequently called Wi-Fi library RX functions in IRAM. When this option is disabled, more than 17Kbytes of IRAM memory will be saved but Wi-Fi performance will be reduced.

Default value:

- No (disabled) if *CONFIG_BT_ENABLED* && *CONFIG_ESP32_SPIRAM_SUPPORT*
- Yes (enabled)

CONFIG_ESP32_WIFI_ENABLE_WPA3_SAE

Enable WPA3-Personal

Found in: Component config > Wi-Fi

Select this option to allow the device to establish a WPA3-Personal connection with eligible AP' s. PMF (Protected Management Frames) is a prerequisite feature for a WPA3 connection, it needs to be explicitly configured before attempting connection. Please refer to the Wi-Fi Driver API Guide for details.

Default value:

- Yes (enabled)

CONFIG_ESP_WIFI_SLP_IRAM_OPT

WiFi SLP IRAM speed optimization

Found in: Component config > Wi-Fi

Select this option to place called Wi-Fi library TBTT process and receive beacon functions in IRAM. Some functions can be put in IRAM either by ESP32_WIFI_IRAM_OPT and ESP32_WIFI_RX_IRAM_OPT, or this one. If already enabled ESP32_WIFI_IRAM_OPT, the other 7.3KB IRAM memory would be taken by this option. If already enabled ESP32_WIFI_RX_IRAM_OPT, the other 1.3KB IRAM memory would be taken by this option. If neither of them are enabled, the other 7.4KB IRAM memory would be taken by this option. Wi-Fi power-save mode average current would be reduced if this option is enabled.

CONFIG_ESP_WIFI_SLP_DEFAULT_MIN_ACTIVE_TIME

Minimum active time

Found in: Component config > Wi-Fi > CONFIG_ESP_WIFI_SLP_IRAM_OPT

The minimum timeout for waiting to receive data, unit: milliseconds.

Range:

- from 8 to 60 if *CONFIG_ESP_WIFI_SLP_IRAM_OPT*

Default value:

- 50 if *CONFIG_ESP_WIFI_SLP_IRAM_OPT*

CONFIG_ESP_WIFI_SLP_DEFAULT_MAX_ACTIVE_TIME

Maximum keep alive time

Found in: Component config > Wi-Fi > CONFIG_ESP_WIFI_SLP_IRAM_OPT

The maximum time that wifi keep alive, unit: seconds.

Range:

- from 10 to 60 if *CONFIG_ESP_WIFI_SLP_IRAM_OPT*

Default value:

- 10 if *CONFIG_ESP_WIFI_SLP_IRAM_OPT*

CONFIG_ESP_WIFI_STA_DISCONNECTED_PM_ENABLE

Power Management for station at disconnected

Found in: Component config > Wi-Fi

Select this option to enable power_management for station when disconnected. Chip will do modem-sleep when rf module is not in use any more.

CONFIG_ESP_WIFI_GMAC_SUPPORT

WiFi GMAC Support(GMAC128 and GMAC256)

Found in: Component config > Wi-Fi

Select this option to enable GMAC support. GMAC support is compulsory for WiFi 192 bit certification.

Default value:

- No (disabled)

CONFIG_ESP_WIFI_SOFTAP_SUPPORT

WiFi SoftAP Support

Found in: Component config > Wi-Fi

WiFi module can be compiled without SoftAP to save code size.

Default value:

- Yes (enabled)

CONFIG_ESP_WIFI_SLP_BEACON_LOST_OPT

Wifi sleep optimize when beacon lost

Found in: Component config > Wi-Fi

Enable wifi sleep optimization when beacon loss occurs and immediately enter sleep mode when the WiFi module detects beacon loss.

CONFIG_ESP_WIFI_SLP_BEACON_LOST_TIMEOUT

Beacon loss timeout

Found in: Component config > Wi-Fi > CONFIG_ESP_WIFI_SLP_BEACON_LOST_OPT

Timeout time for close rf phy when beacon loss occurs, Unit: 1024 microsecond.

Range:

- from 5 to 100 if *CONFIG_ESP_WIFI_SLP_BEACON_LOST_OPT*

Default value:

- 10 if *CONFIG_ESP_WIFI_SLP_BEACON_LOST_OPT*

CONFIG_ESP_WIFI_SLP_BEACON_LOST_THRESHOLD

Maximum number of consecutive lost beacons allowed

Found in: Component config > Wi-Fi > CONFIG_ESP_WIFI_SLP_BEACON_LOST_OPT

Maximum number of consecutive lost beacons allowed, WiFi keeps Rx state when the number of consecutive beacons lost is greater than the given threshold.

Range:

- from 0 to 8 if *CONFIG_ESP_WIFI_SLP_BEACON_LOST_OPT*

Default value:

- 3 if *CONFIG_ESP_WIFI_SLP_BEACON_LOST_OPT*

CONFIG_ESP_WIFI_SLP_PHY_ON_DELTA_EARLY_TIME

Delta early time for RF PHY on

Found in: Component config > Wi-Fi > CONFIG_ESP_WIFI_SLP_BEACON_LOST_OPT

Delta early time for rf phy on, When the beacon is lost, the next rf phy on will be earlier the time specified by the configuration item, Unit: 32 microsecond.

Range:
- from 0 to 100 if *CONFIG_ESP_WIFI_SLP_BEACON_LOST_OPT*

Default value:
- 2 if *CONFIG_ESP_WIFI_SLP_BEACON_LOST_OPT*

CONFIG_ESP_WIFI_SLP_PHY_OFF_DELTA_TIMEOUT_TIME

Delta timeout time for RF PHY off

Found in: Component config > Wi-Fi > CONFIG_ESP_WIFI_SLP_BEACON_LOST_OPT

Delta timeout time for rf phy off, When the beacon is lost, the next rf phy off will be delayed for the time specified by the configuration item. Unit: 1024 microsecond.

Range:
- from 0 to 8 if *CONFIG_ESP_WIFI_SLP_BEACON_LOST_OPT*

Default value:
- 2 if *CONFIG_ESP_WIFI_SLP_BEACON_LOST_OPT*

Core dump

Contains:

- *CONFIG_ESP_COREDUMP_CHECK_BOOT*
- *CONFIG_ESP_COREDUMP_DATA_FORMAT*
- *CONFIG_ESP_COREDUMP_CHECKSUM*
- *CONFIG_ESP_COREDUMP_TO_FLASH_OR_UART*
- *CONFIG_ESP_COREDUMP_UART_DELAY*
- *CONFIG_ESP_COREDUMP_DECODE*
- *CONFIG_ESP_COREDUMP_MAX_TASKS_NUM*

CONFIG_ESP_COREDUMP_TO_FLASH_OR_UART

Data destination

Found in: Component config > Core dump

Select place to store core dump: flash, uart or none (to disable core dumps generation).

Core dumps to Flash are not available if PSRAM is used for task stacks.

If core dump is configured to be stored in flash and custom partition table is used add corresponding entry to your CSV. For examples, please see predefined partition table CSV descriptions in the components/partition_table directory.

Available options:
- Flash (ESP_COREDUMP_ENABLE_TO_FLASH)
- UART (ESP_COREDUMP_ENABLE_TO_UART)
- None (ESP_COREDUMP_ENABLE_TO_NONE)

CONFIG_ESP_COREDUMP_DATA_FORMAT

Core dump data format

Found in: Component config > Core dump

Select the data format for core dump.

Available options:
- Binary format (ESP_COREDUMP_DATA_FORMAT_BIN)
- ELF format (ESP_COREDUMP_DATA_FORMAT_ELF)

CONFIG_ESP_COREDUMP_CHECKSUM

Core dump data integrity check

Found in: Component config > Core dump

Select the integrity check for the core dump.

Available options:
- Use CRC32 for integrity verification (ESP_COREDUMP_CHECKSUM_CRC32)
- Use SHA256 for integrity verification (ESP_COREDUMP_CHECKSUM_SHA256)

CONFIG_ESP_COREDUMP_CHECK_BOOT

Check core dump data integrity on boot

Found in: Component config > Core dump

When enabled, if any data are found on the flash core dump partition, they will be checked by calculating their checksum.

Default value:
- Yes (enabled) if ESP_COREDUMP_ENABLE_TO_FLASH

CONFIG_ESP_COREDUMP_MAX_TASKS_NUM

Maximum number of tasks

Found in: Component config > Core dump

Maximum number of tasks snapshots in core dump.

CONFIG_ESP_COREDUMP_UART_DELAY

Delay before print to UART

Found in: Component config > Core dump

Config delay (in ms) before printing core dump to UART. Delay can be interrupted by pressing Enter key.

Default value:
- 0 if ESP_COREDUMP_ENABLE_TO_UART

CONFIG_ESP_COREDUMP_DECODE

Handling of UART core dumps in IDF Monitor

Found in: Component config > Core dump

Available options:
- Decode and show summary (info_corefile) (ESP_COREDUMP_DECODE_INFO)
- Don’t decode (ESP_COREDUMP_DECODE_DISABLE)

FAT Filesystem support Contains:

- *CONFIG_FATFS_API_ENCODING*
- *CONFIG_FATFS_USE_FASTSEEK*
- *CONFIG_FATFS_LONG_FILENAMES*
- *CONFIG_FATFS_MAX_LFN*
- *CONFIG_FATFS_FS_LOCK*
- *CONFIG_FATFS_CHOOSE_CODEPAGE*
- *CONFIG_FATFS_ALLOC_PREFER_EXTRAM*
- *CONFIG_FATFS_TIMEOUT_MS*
- *CONFIG_FATFS_PER_FILE_CACHE*

CONFIG_FATFS_CHOOSE_CODEPAGE

OEM Code Page

Found in: Component config > FAT Filesystem support

OEM code page used for file name encodings.

If "Dynamic" is selected, code page can be chosen at runtime using f_setcp function. Note that choosing this option will increase application size by ~480kB.

Available options:

- Dynamic (all code pages supported) (FATFS_CODEPAGE_DYNAMIC)
- US (CP437) (FATFS_CODEPAGE_437)
- Arabic (CP720) (FATFS_CODEPAGE_720)
- Greek (CP737) (FATFS_CODEPAGE_737)
- KBL (CP771) (FATFS_CODEPAGE_771)
- Baltic (CP775) (FATFS_CODEPAGE_775)
- Latin 1 (CP850) (FATFS_CODEPAGE_850)
- Latin 2 (CP852) (FATFS_CODEPAGE_852)
- Cyrillic (CP855) (FATFS_CODEPAGE_855)
- Turkish (CP857) (FATFS_CODEPAGE_857)
- Portugese (CP860) (FATFS_CODEPAGE_860)
- Icelandic (CP861) (FATFS_CODEPAGE_861)
- Hebrew (CP862) (FATFS_CODEPAGE_862)
- Canadian French (CP863) (FATFS_CODEPAGE_863)
- Arabic (CP864) (FATFS_CODEPAGE_864)
- Nordic (CP865) (FATFS_CODEPAGE_865)
- Russian (CP866) (FATFS_CODEPAGE_866)
- Greek 2 (CP869) (FATFS_CODEPAGE_869)
- Japanese (DBCS) (CP932) (FATFS_CODEPAGE_932)
- Simplified Chinese (DBCS) (CP936) (FATFS_CODEPAGE_936)
- Korean (DBCS) (CP949) (FATFS_CODEPAGE_949)
- Traditional Chinese (DBCS) (CP950) (FATFS_CODEPAGE_950)

CONFIG_FATFS_LONG_FILENAMES

Long filename support

Found in: Component config > FAT Filesystem support

Support long filenames in FAT. Long filename data increases memory usage. FATFS can be configured to store the buffer for long filename data in stack or heap.

Available options:

- No long filenames (FATFS_LFN_NONE)
- Long filename buffer in heap (FATFS_LFN_HEAP)
- Long filename buffer on stack (FATFS_LFN_STACK)

CONFIG_FATFS_MAX_LFN

Max long filename length

Found in: Component config > FAT Filesystem support

Maximum long filename length. Can be reduced to save RAM.

Range:
- from 12 to 255

Default value:
- 255

CONFIG_FATFS_API_ENCODING

API character encoding

Found in: Component config > FAT Filesystem support

Choose encoding for character and string arguments/returns when using FATFS APIs. The encoding of arguments will usually depend on text editor settings.

Available options:
- API uses ANSI/OEM encoding (FATFS_API_ENCODING_ANSI_OEM)
- API uses UTF-16 encoding (FATFS_API_ENCODING_UTF_16)
- API uses UTF-8 encoding (FATFS_API_ENCODING_UTF_8)

CONFIG_FATFS_FS_LOCK

Number of simultaneously open files protected by lock function

Found in: Component config > FAT Filesystem support

This option sets the FATFS configuration value _FS_LOCK. The option _FS_LOCK switches file lock function to control duplicated file open and illegal operation to open objects.

* 0: Disable file lock function. To avoid volume corruption, application should avoid illegal open, remove and rename to the open objects.

* >0: Enable file lock function. The value defines how many files/sub-directories can be opened simultaneously under file lock control.

Note that the file lock control is independent of re-entrancy.

Range:
- from 0 to 65535

Default value:
- 0

CONFIG_FATFS_TIMEOUT_MS

Timeout for acquiring a file lock, ms

Found in: Component config > FAT Filesystem support

This option sets FATFS configuration value _FS_TIMEOUT, scaled to milliseconds. Sets the number of milliseconds FATFS will wait to acquire a mutex when operating on an open file. For example, if one task is performing a lenghty operation, another task will wait for the first task to release the lock, and time out after amount of time set by this option.

Default value:
- 10000

CONFIG_FATFS_PER_FILE_CACHE

Use separate cache for each file

Found in: Component config > FAT Filesystem support

This option affects FATFS configuration value _FS_TINY.

If this option is set, _FS_TINY is 0, and each open file has its own cache, size of the cache is equal to the _MAX_SS variable (512 or 4096 bytes). This option uses more RAM if more than 1 file is open, but needs less reads and writes to the storage for some operations.

If this option is not set, _FS_TINY is 1, and single cache is used for all open files, size is also equal to _MAX_SS variable. This reduces the amount of heap used when multiple files are open, but increases the number of read and write operations which FATFS needs to make.

Default value:

- Yes (enabled)

CONFIG_FATFS_ALLOC_PREFER_EXTRAM

Perfer external RAM when allocating FATFS buffers

Found in: Component config > FAT Filesystem support

When the option is enabled, internal buffers used by FATFS will be allocated from external RAM. If the allocation from external RAM fails, the buffer will be allocated from the internal RAM. Disable this option if optimizing for performance. Enable this option if optimizing for internal memory size.

Default value:

- Yes (enabled) if SPIRAM_USE_CAPS_ALLOC || SPIRAM_USE_MALLOC

CONFIG_FATFS_USE_FASTSEEK

Enable fast seek algorithm when using lseek function through VFS FAT

Found in: Component config > FAT Filesystem support

The fast seek feature enables fast backward/long seek operations without FAT access by using an in-memory CLMT (cluster link map table). Please note, fast-seek is only allowed for read-mode files, if a file is opened in write-mode, the seek mechanism will automatically fallback to the default implementation.

Default value:

- No (disabled)

CONFIG_FATFS_FAST_SEEK_BUFFER_SIZE

Fast seek CLMT buffer size

Found in: Component config > FAT Filesystem support > CONFIG_FATFS_USE_FASTSEEK

If fast seek algorithm is enabled, this defines the size of CLMT buffer used by this algorithm in 32-bit word units. This value should be chosen based on prior knowledge of maximum elements of each file entry would store.

Default value:

- 64 if *CONFIG_FATFS_USE_FASTSEEK*

Modbus configuration Contains:

- *CONFIG_FMB_COMM_MODE_ASCII_EN*
- *CONFIG_FMB_COMM_MODE_RTU_EN*
- *CONFIG_FMB_COMM_MODE_TCP_EN*
- *CONFIG_FMB_MASTER_TIMER_GROUP*

- *CONFIG_FMB_MASTER_TIMER_INDEX*
- *CONFIG_FMB_CONTROLLER_NOTIFY_QUEUE_SIZE*
- *CONFIG_FMB_CONTROLLER_NOTIFY_TIMEOUT*
- *CONFIG_FMB_CONTROLLER_SLAVE_ID_SUPPORT*
- *CONFIG_FMB_CONTROLLER_STACK_SIZE*
- *CONFIG_FMB_PORT_TASK_PRIO*
- *CONFIG_FMB_PORT_TASK_STACK_SIZE*
- *CONFIG_FMB_QUEUE_LENGTH*
- *CONFIG_FMB_SERIAL_BUF_SIZE*
- *CONFIG_FMB_EVENT_QUEUE_TIMEOUT*
- *CONFIG_FMB_TIMER_PORT_ENABLED*
- *CONFIG_FMB_PORT_TASK_AFFINITY*
- *CONFIG_FMB_SERIAL_ASCII_BITS_PER_SYMB*
- *CONFIG_FMB_TIMER_ISR_IN_IRAM*
- *CONFIG_FMB_SERIAL_ASCII_TIMEOUT_RESPOND_MS*
- *CONFIG_FMB_MASTER_DELAY_MS_CONVERT*
- *CONFIG_FMB_MASTER_TIMEOUT_MS_RESPOND*
- *CONFIG_FMB_TIMER_GROUP*
- *CONFIG_FMB_TIMER_INDEX*

CONFIG_FMB_COMM_MODE_TCP_EN

Enable Modbus stack support for TCP communication mode

Found in: Component config > Modbus configuration

Enable Modbus TCP option for stack.

Default value:

- Yes (enabled)

CONFIG_FMB_TCP_PORT_DEFAULT

Modbus TCP port number

Found in: Component config > Modbus configuration > CONFIG_FMB_COMM_MODE_TCP_EN

Modbus default port number used by Modbus TCP stack

Range:

- from 0 to 65535

Default value:

- 502

CONFIG_FMB_TCP_PORT_MAX_CONN

Maximum allowed connections for TCP stack

Found in: Component config > Modbus configuration > CONFIG_FMB_COMM_MODE_TCP_EN

Maximum allowed connections number for Modbus TCP stack. This is used by Modbus master and slave port layer to establish connections. This parameter may decrease performance of Modbus stack and can cause increasing of processing time (increase only if absolutely necessary).

Range:

- from 1 to 6

Default value:

- 5

CONFIG_FMB_TCP_CONNECTION_TOUT_SEC

Modbus TCP connection timeout

Found in: Component config > Modbus configuration > CONFIG_FMB_COMM_MODE_TCP_EN

Modbus TCP connection timeout in seconds. Once expired the current connection with the client will be closed and Modbus slave will be waiting for new connection to accept.

Range:
- from 1 to 3600

Default value:
- 20

CONFIG_FMB_COMM_MODE_RTU_EN

Enable Modbus stack support for RTU mode

Found in: Component config > Modbus configuration

Enable RTU Modbus communication mode option for Modbus serial stack.

Default value:
- Yes (enabled)

CONFIG_FMB_COMM_MODE_ASCII_EN

Enable Modbus stack support for ASCII mode

Found in: Component config > Modbus configuration

Enable ASCII Modbus communication mode option for Modbus serial stack.

Default value:
- Yes (enabled)

CONFIG_FMB_MASTER_TIMEOUT_MS_RESPOND

Slave respond timeout (Milliseconds)

Found in: Component config > Modbus configuration

If master sends a frame which is not broadcast, it has to wait sometime for slave response. if slave is not respond in this time, the master will process timeout error.

Range:
- from 50 to 3000

Default value:
- 150

CONFIG_FMB_MASTER_DELAY_MS_CONVERT

Slave conversion delay (Milliseconds)

Found in: Component config > Modbus configuration

If master sends a broadcast frame, it has to wait conversion time to delay, then master can send next frame.

Range:
- from 50 to 400

Default value:
- 200

CONFIG_FMB_QUEUE_LENGTH

Modbus serial task queue length

Found in: Component config > Modbus configuration

Modbus serial driver queue length. It is used by event queue task. See the serial driver API for more information.

Range:
- from 0 to 200

Default value:
- 20

CONFIG_FMB_PORT_TASK_STACK_SIZE

Modbus port task stack size

Found in: Component config > Modbus configuration

Modbus port task stack size for rx/tx event processing. It may be adjusted when debugging is enabled (for example).

Range:
- from 2048 to 8192

Default value:
- 4096

CONFIG_FMB_SERIAL_BUF_SIZE

Modbus serial task RX/TX buffer size

Found in: Component config > Modbus configuration

Modbus serial task RX and TX buffer size for UART driver initialization. This buffer is used for modbus frame transfer. The Modbus protocol maximum frame size is 256 bytes. Bigger size can be used for non standard implementations.

Range:
- from 0 to 2048

Default value:
- 256

CONFIG_FMB_SERIAL_ASCII_BITS_PER_SYMB

Number of data bits per ASCII character

Found in: Component config > Modbus configuration

This option defines the number of data bits per ASCII character.

Range:
- from 7 to 8

Default value:
- 8

CONFIG_FMB_SERIAL_ASCII_TIMEOUT_RESPOND_MS

Response timeout for ASCII communication mode (ms)

Found in: Component config > Modbus configuration

This option defines response timeout of slave in milliseconds for ASCII communication mode. Thus the timeout will expire and allow the master program to handle the error.

Range:
- from 300 to 2000

Default value:
- 1000

CONFIG_FMB_PORT_TASK_PRIO

Modbus port task priority

Found in: Component config > Modbus configuration

Modbus port data processing task priority. The priority of Modbus controller task is equal to (CONFIG_FMB_PORT_TASK_PRIO - 1).

Range:
- from 3 to 23

Default value:
- 10

CONFIG_FMB_PORT_TASK_AFFINITY

Modbus task affinity

Found in: Component config > Modbus configuration

Allows setting the core affinity of the Modbus controller task, i.e. whether the task is pinned to particular CPU, or allowed to run on any CPU.

Available options:
- No affinity (FMB_PORT_TASK_AFFINITY_NO_AFFINITY)
- CPU0 (FMB_PORT_TASK_AFFINITY_CPU0)
- CPU1 (FMB_PORT_TASK_AFFINITY_CPU1)

CONFIG_FMB_CONTROLLER_SLAVE_ID_SUPPORT

Modbus controller slave ID support

Found in: Component config > Modbus configuration

Modbus slave ID support enable. When enabled the Modbus <Report Slave ID> command is supported by stack.

Default value:
- Yes (enabled)

CONFIG_FMB_CONTROLLER_SLAVE_ID

Modbus controller slave ID

Found in: Component config > Modbus configuration > CONFIG_FMB_CONTROLLER_SLAVE_ID_SUPPORT

Modbus slave ID value to identify modbus device in the network using <Report Slave ID> command. Most significant byte of ID is used as short device ID and other three bytes used as long ID.

Range:
- from 0 to 4294967295

Default value:
- “0x00112233”

CONFIG_FMB_CONTROLLER_NOTIFY_TIMEOUT

Modbus controller notification timeout (ms)

Found in: Component config > Modbus configuration

Modbus controller notification timeout in milliseconds. This timeout is used to send notification about accessed parameters.

Range:
- from 0 to 200

Default value:
- 20

CONFIG_FMB_CONTROLLER_NOTIFY_QUEUE_SIZE

Modbus controller notification queue size

Found in: Component config > Modbus configuration

Modbus controller notification queue size. The notification queue is used to get information about accessed parameters.

Range:
- from 0 to 200

Default value:
- 20

CONFIG_FMB_CONTROLLER_STACK_SIZE

Modbus controller stack size

Found in: Component config > Modbus configuration

Modbus controller task stack size. The Stack size may be adjusted when debug mode is used which requires more stack size (for example).

Range:
- from 0 to 8192

Default value:
- 4096

CONFIG_FMB_EVENT_QUEUE_TIMEOUT

Modbus stack event queue timeout (ms)

Found in: Component config > Modbus configuration

Modbus stack event queue timeout in milliseconds. This may help to optimize Modbus stack event processing time.

Range:
- from 0 to 500

Default value:
- 20

CONFIG_FMB_TIMER_PORT_ENABLED

Modbus stack use timer for 3.5T symbol time measurement

Found in: Component config > Modbus configuration

If this option is set the Modbus stack uses timer for T3.5 time measurement. Else the internal UART TOUT timeout is used for 3.5T symbol time measurement.

Default value:
- No (disabled)

CONFIG_FMB_TIMER_GROUP

Slave Timer group number

Found in: Component config > Modbus configuration

Modbus slave Timer group number that is used for timeout measurement.

Range:
- from 0 to 1

Default value:
- 0

CONFIG_FMB_TIMER_INDEX

Slave Timer index in the group

Found in: Component config > Modbus configuration

Modbus slave Timer Index in the group that is used for timeout measurement.

Range:
- from 0 to 1

Default value:
- 0

CONFIG_FMB_MASTER_TIMER_GROUP

Master Timer group number

Found in: Component config > Modbus configuration

Modbus master Timer group number that is used for timeout measurement.

Range:
- from 0 to 1

Default value:
- 0

CONFIG_FMB_MASTER_TIMER_INDEX

Master Timer index

Found in: Component config > Modbus configuration

Modbus master Timer Index in the group that is used for timeout measurement. Note: Modbus master and slave should have different timer index to be able to work simultaneously.

Range:
- from 0 to 1

Default value:
- 0

CONFIG_FMB_TIMER_ISR_IN_IRAM

Place timer interrupt handler into IRAM

Found in: Component config > Modbus configuration

This option places Modbus timer IRQ handler into IRAM. This allows to avoid delays related to processing of non-IRAM-safe interrupts during a flash write operation (NVS updating a value, or some

other flash API which has to perform an read/write operation and disable CPU cache). This option has dependency with the UART_ISR_IN_IRAM option which places UART interrupt handler into IRAM to prevent delays related to processing of UART events.

Default value:

- No (disabled)

FreeRTOS Contains:

- *CONFIG_FREERTOS_FPU_IN_ISR*
- *CONFIG_FREERTOS_CHECK_STACKOVERFLOW*
- *CONFIG_FREERTOS_CHECK_MUTEX_GIVEN_BY_OWNER*
- *CONFIG_FREERTOS_INTERRUPT_BACKTRACE*
- *CONFIG_FREERTOS_OPTIMIZED_SCHEDULER*
- *CONFIG_FREERTOS_GENERATE_RUN_TIME_STATS*
- *CONFIG_FREERTOS_USE_TRACE_FACILITY*
- *CONFIG_FREERTOS_ENABLE_STATIC_TASK_CLEAN_UP*
- *CONFIG_FREERTOS_ENABLE_TASK_SNAPSHOT*
- *CONFIG_FREERTOS_TASK_FUNCTION_WRAPPER*
- *CONFIG_FREERTOS_ASSERT*
- *CONFIG_FREERTOS_QUEUE_REGISTRY_SIZE*
- *CONFIG_FREERTOS_TIMER_QUEUE_LENGTH*
- *CONFIG_FREERTOS_TIMER_TASK_PRIORITY*
- *CONFIG_FREERTOS_TIMER_TASK_STACK_DEPTH*
- *CONFIG_FREERTOS_ASSERT_ON_UNTESTED_FUNCTION*
- *CONFIG_FREERTOS_IDLE_TASK_STACKSIZE*
- *CONFIG_FREERTOS_ISR_STACKSIZE*
- *CONFIG_FREERTOS_MAX_TASK_NAME_LEN*
- *CONFIG_FREERTOS_THREAD_LOCAL_STORAGE_POINTERS*
- *CONFIG_FREERTOS_PLACE_FUNCTIONS_INTO_FLASH*
- *CONFIG_FREERTOS_UNICORE*
- *CONFIG_FREERTOS_WATCHPOINT_END_OF_STACK*
- *CONFIG_FREERTOS_CHECK_PORT_CRITICAL_COMPLIANCE*
- *CONFIG_FREERTOS_HZ*
- *CONFIG_FREERTOS_USE_TICKLESS_IDLE*
- *CONFIG_FREERTOS_LEGACY_HOOKS*
- *CONFIG_FREERTOS_CORETIMER*

CONFIG_FREERTOS_UNICORE

Run FreeRTOS only on first core

Found in: Component config > FreeRTOS

This version of FreeRTOS normally takes control of all cores of the CPU. Select this if you only want to start it on the first core. This is needed when e.g. another process needs complete control over the second core.

This invisible config value sets the value of tskNO_AFFINITY in task.h. # Intended to be used as a constant from other Kconfig files. # Value is (32-bit) INT_MAX.

CONFIG_FREERTOS_CORETIMER

Xtensa timer to use as the FreeRTOS tick source

Found in: Component config > FreeRTOS

FreeRTOS needs a timer with an associated interrupt to use as the main tick source to increase counters, run timers and do pre-emptive multitasking with. There are multiple timers available to do this, with different interrupt priorities. Check

Available options:

- Timer 0 (int 6, level 1) (FREERTOS_CORETIMER_0)
  Select this to use timer 0
- Timer 1 (int 15, level 3) (FREERTOS_CORETIMER_1)
  Select this to use timer 1
- SYSTIMER 0 (level 1) (FREERTOS_CORETIMER_SYSTIMER_LVL1)
  Select this to use systimer with the 1 interrupt priority.
- SYSTIMER 0 (level 3) (FREERTOS_CORETIMER_SYSTIMER_LVL3)
  Select this to use systimer with the 3 interrupt priority.

CONFIG_FREERTOS_OPTIMIZED_SCHEDULER

Enable FreeRTOS plátform optimized scheduler

Found in: Component config > FreeRTOS

On most platforms there are instructions can speedup the ready task searching. Enabling this option the FreeRTOS with this instructions support will be built.

Default value:

- Yes (enabled) if *CONFIG_FREERTOS_UNICORE*

CONFIG_FREERTOS_HZ

Tick rate (Hz)

Found in: Component config > FreeRTOS

Select the tick rate at which FreeRTOS does pre-emptive context switching.

Range:

- from 1 to 1000

Default value:

- 100

CONFIG_FREERTOS_ASSERT_ON_UNTESTED_FUNCTION

Halt when an SMP-untested function is called

Found in: Component config > FreeRTOS

Some functions in FreeRTOS have not been thoroughly tested yet when moving to the SMP implementation of FreeRTOS. When this option is enabled, these fuctions will throw an assert().

Default value:

- Yes (enabled)

CONFIG_FREERTOS_CHECK_STACKOVERFLOW

Check for stack overflow

Found in: Component config > FreeRTOS

FreeRTOS can check for stack overflows in threads and trigger an user function called vApplicationStackOverflowHook when this happens.

Available options:

- No checking (FREERTOS_CHECK_STACKOVERFLOW_NONE)
  Do not check for stack overflows (configCHECK_FOR_STACK_OVERFLOW=0)
- Check by stack pointer value (FREERTOS_CHECK_STACKOVERFLOW_PTRVAL)
  Check for stack overflows on each context switch by checking if the stack pointer is in a valid range. Quick but does not detect stack overflows that happened between context switches (configCHECK_FOR_STACK_OVERFLOW=1)

- Check using canary bytes (FREERTOS_CHECK_STACKOVERFLOW_CANARY)
  Places some magic bytes at the end of the stack area and on each context switch, check if these bytes are still intact. More thorough than just checking the pointer, but also slightly slower. (configCHECK_FOR_STACK_OVERFLOW=2)

CONFIG_FREERTOS_WATCHPOINT_END_OF_STACK

Set a debug watchpoint as a stack overflow check

Found in: Component config > FreeRTOS

FreeRTOS can check if a stack has overflown its bounds by checking either the value of the stack pointer or by checking the integrity of canary bytes. (See FREERTOS_CHECK_STACKOVERFLOW for more information.) These checks only happen on a context switch, and the situation that caused the stack overflow may already be long gone by then. This option will use the last debug memory watchpoint to allow breaking into the debugger (or panic'ing) as soon as any of the last 32 bytes on the stack of a task are overwritten. The side effect is that using gdb, you effectively have one hardware watchpoint less because the last one is overwritten as soon as a task switch happens.

Another consequence is that due to alignment requirements of the watchpoint, the usable stack size decreases by up to 60 bytes. This is because the watchpoint region has to be aligned to its size and the size for the stack watchpoint in IDF is 32 bytes.

This check only triggers if the stack overflow writes within 32 bytes near the end of the stack, rather than overshooting further, so it is worth combining this approach with one of the other stack overflow check methods.

When this watchpoint is hit, gdb will stop with a SIGTRAP message. When no JTAG OCD is attached, esp-idf will panic on an unhandled debug exception.

Default value:

- No (disabled)

CONFIG_FREERTOS_INTERRUPT_BACKTRACE

Enable backtrace from interrupt to task context

Found in: Component config > FreeRTOS

If this option is enabled, interrupt stack frame will be modified to point to the code of the interrupted task as its return address. This helps the debugger (or the panic handler) show a backtrace from the interrupt to the task which was interrupted. This also works for nested interrupts: higer level interrupt stack can be traced back to the lower level interrupt. This option adds 4 instructions to the interrupt dispatching code.

Default value:

- Yes (enabled)

CONFIG_FREERTOS_THREAD_LOCAL_STORAGE_POINTERS

Number of thread local storage pointers

Found in: Component config > FreeRTOS

FreeRTOS has the ability to store per-thread pointers in the task control block. This controls the number of pointers available.

This value must be at least 1. Index 0 is reserved for use by the pthreads API thread-local-storage. Other indexes can be used for any desired purpose.

Range:

- from 1 to 256

Default value:

- 1

CONFIG_FREERTOS_ASSERT

FreeRTOS assertions

Found in: Component config > FreeRTOS

Failed FreeRTOS configASSERT() assertions can be configured to behave in different ways.

By default these behave the same as the global project assert settings.

Available options:

- abort() on failed assertions (FREERTOS_ASSERT_FAIL_ABORT)
  If a FreeRTOS configASSERT() fails, FreeRTOS will abort() and halt execution. The panic handler can be configured to handle the outcome of an abort() in different ways.
  If assertions are disabled for the entire project, they are also disabled in FreeRTOS and this option is unavailable.
- Print and continue failed assertions (FREERTOS_ASSERT_FAIL_PRINT_CONTINUE)
  If a FreeRTOS assertion fails, print it out and continue.
- Disable FreeRTOS assertions (FREERTOS_ASSERT_DISABLE)
  FreeRTOS configASSERT() will not be compiled into the binary.

CONFIG_FREERTOS_IDLE_TASK_STACKSIZE

Idle Task stack size

Found in: Component config > FreeRTOS

The idle task has its own stack, sized in bytes. The default size is enough for most uses. Size can be reduced to 768 bytes if no (or simple) FreeRTOS idle hooks are used and pthread local storage or FreeRTOS local storage cleanup callbacks are not used.

The stack size may need to be increased above the default if the app installs idle or thread local storage cleanup hooks that use a lot of stack memory.

Range:

- from 768 to 32768

Default value:

- 1536

CONFIG_FREERTOS_ISR_STACKSIZE

ISR stack size

Found in: Component config > FreeRTOS

The interrupt handlers have their own stack. The size of the stack can be defined here. Each processor has its own stack, so the total size occupied will be twice this.

Range:

- from 2096 to 32768 if ESP_COREDUMP_DATA_FORMAT_ELF
- from 1536 to 32768

Default value:

- 2096 if ESP_COREDUMP_DATA_FORMAT_ELF
- 1536

CONFIG_FREERTOS_LEGACY_HOOKS

Use FreeRTOS legacy hooks

Found in: Component config > FreeRTOS

FreeRTOS offers a number of hooks/callback functions that are called when a timer tick happens, the idle thread runs etc. esp-idf replaces these by runtime registerable hooks using the

esp_register_freertos_xxx_hook system, but for legacy reasons the old hooks can also still be enabled. Please enable this only if you have code that for some reason can't be migrated to the esp_register_freertos_xxx_hook system.

Default value:

- No (disabled)

CONFIG_FREERTOS_MAX_TASK_NAME_LEN

Maximum task name length

Found in: Component config > FreeRTOS

Changes the maximum task name length. Each task allocated will include this many bytes for a task name. Using a shorter value saves a small amount of RAM, a longer value allows more complex names.

For most uses, the default of 16 is OK.

Range:

- from 1 to 256

Default value:

- 16

CONFIG_FREERTOS_ENABLE_STATIC_TASK_CLEAN_UP

Enable static task clean up hook

Found in: Component config > FreeRTOS

Enable this option to make FreeRTOS call the static task clean up hook when a task is deleted.

Bear in mind that if this option is enabled you will need to implement the following function:

```
void vPortCleanUpTCB ( void \*pxTCB ) {
    // place clean up code here
}
```

Default value:

- No (disabled)

CONFIG_FREERTOS_TIMER_TASK_PRIORITY

FreeRTOS timer task priority

Found in: Component config > FreeRTOS

The timer service task (primarily) makes use of existing FreeRTOS features, allowing timer functionality to be added to an application with minimal impact on the size of the application's executable binary.

Use this constant to define the priority that the timer task will run at.

Range:

- from 1 to 25

Default value:

- 1

CONFIG_FREERTOS_TIMER_TASK_STACK_DEPTH

FreeRTOS timer task stack size

Found in: Component config > FreeRTOS

The timer service task (primarily) makes use of existing FreeRTOS features, allowing timer functionality to be added to an application with minimal impact on the size of the application's executable binary.

Use this constant to define the size (in bytes) of the stack allocated for the timer task.

Range:
- from 1536 to 32768

Default value:
- 2048

CONFIG_FREERTOS_TIMER_QUEUE_LENGTH

FreeRTOS timer queue length

Found in: Component config > FreeRTOS

FreeRTOS provides a set of timer related API functions. Many of these functions use a standard FreeRTOS queue to send commands to the timer service task. The queue used for this purpose is called the 'timer command queue'. The 'timer command queue' is private to the FreeRTOS timer implementation, and cannot be accessed directly.

For most uses the default value of 10 is OK.

Range:
- from 5 to 20

Default value:
- 10

CONFIG_FREERTOS_QUEUE_REGISTRY_SIZE

FreeRTOS queue registry size

Found in: Component config > FreeRTOS

FreeRTOS uses the queue registry as a means for kernel aware debuggers to locate queues, semaphores, and mutexes. The registry allows for a textual name to be associated with a queue for easy identification within a debugging GUI. A value of 0 will disable queue registry functionality, and a value larger than 0 will specify the number of queues/semaphores/mutexes that the registry can hold.

Range:
- from 0 to 20

Default value:
- 0

CONFIG_FREERTOS_USE_TRACE_FACILITY

Enable FreeRTOS trace facility

Found in: Component config > FreeRTOS

If enabled, configUSE_TRACE_FACILITY will be defined as 1 in FreeRTOS. This will allow the usage of trace facility functions such as uxTaskGetSystemState().

Default value:
- No (disabled)

CONFIG_FREERTOS_USE_STATS_FORMATTING_FUNCTIONS

Enable FreeRTOS stats formatting functions

Found in: Component config > FreeRTOS > CONFIG_FREERTOS_USE_TRACE_FACILITY

If enabled, configUSE_STATS_FORMATTING_FUNCTIONS will be defined as 1 in FreeRTOS. This will allow the usage of stats formatting functions such as vTaskList().

Default value:
- No (disabled) if *CONFIG_FREERTOS_USE_TRACE_FACILITY*

CONFIG_FREERTOS_VTASKLIST_INCLUDE_COREID

Enable display of xCoreID in vTaskList

Found in: Component config > FreeRTOS > CONFIG_FREERTOS_USE_TRACE_FACILITY > CONFIG_FREERTOS_USE_STATS_FORMATTING_FUNCTIONS

If enabled, this will include an extra column when vTaskList is called to display the CoreID the task is pinned to (0,1) or -1 if not pinned.

Default value:

- No (disabled) if *CONFIG_FREERTOS_USE_STATS_FORMATTING_FUNCTIONS*

CONFIG_FREERTOS_GENERATE_RUN_TIME_STATS

Enable FreeRTOS to collect run time stats

Found in: Component config > FreeRTOS

If enabled, configGENERATE_RUN_TIME_STATS will be defined as 1 in FreeRTOS. This will allow FreeRTOS to collect information regarding the usage of processor time amongst FreeRTOS tasks. Run time stats are generated using either the ESP Timer or the CPU Clock as the clock source (Note that run time stats are only valid until the clock source overflows). The function vTaskGetRunTimeStats() will also be available if FREERTOS_USE_STATS_FORMATTING_FUNCTIONS and FREERTOS_USE_TRACE_FACILITY are enabled. vTaskGetRunTimeStats() will display the run time of each task as a % of the total run time of all CPUs (task run time / no of CPUs) / (total run time / 100)

Default value:

- No (disabled)

CONFIG_FREERTOS_RUN_TIME_STATS_CLK

Choose the clock source for run time stats

Found in: Component config > FreeRTOS > CONFIG_FREERTOS_GENERATE_RUN_TIME_STATS

Choose the clock source for FreeRTOS run time stats. Options are CPU0' s CPU Clock or the ESP Timer. Both clock sources are 32 bits. The CPU Clock can run at a higher frequency hence provide a finer resolution but will overflow much quicker. Note that run time stats are only valid until the clock source overflows.

Available options:

- Use ESP TIMER for run time stats (FREERTOS_RUN_TIME_STATS_USING_ESP_TIMER)
  ESP Timer will be used as the clock source for FreeRTOS run time stats. The ESP Timer runs at a frequency of 1MHz regardless of Dynamic Frequency Scaling. Therefore the ESP Timer will overflow in approximately 4290 seconds.
- Use CPU Clock for run time stats (FREERTOS_RUN_TIME_STATS_USING_CPU_CLK)
  CPU Clock will be used as the clock source for the generation of run time stats. The CPU Clock has a frequency dependent on ESP32_DEFAULT_CPU_FREQ_MHZ and Dynamic Frequency Scaling (DFS). Therefore the CPU Clock frequency can fluctuate between 80 to 240MHz. Run time stats generated using the CPU Clock represents the number of CPU cycles each task is allocated and DOES NOT reflect the amount of time each task runs for (as CPU clock frequency can change). If the CPU clock consistently runs at the maximum frequency of 240MHz, it will overflow in approximately 17 seconds.

CONFIG_FREERTOS_USE_TICKLESS_IDLE

Tickless idle support

Found in: Component config > FreeRTOS

If power management support is enabled, FreeRTOS will be able to put the system into light sleep mode when no tasks need to run for a number of ticks. This number can be set using FREERTOS_IDLE_TIME_BEFORE_SLEEP option. This feature is also known as "automatic light sleep" .

Note that timers created using esp_timer APIs may prevent the system from entering sleep mode, even when no tasks need to run. To skip unnecessary wake-up initialize a timer with the "skip_unhandled_events" option as true.

If disabled, automatic light sleep support will be disabled.

Default value:

- No (disabled) if *CONFIG_PM_ENABLE*

CONFIG_FREERTOS_IDLE_TIME_BEFORE_SLEEP

Minimum number of ticks to enter sleep mode for

Found in: Component config > FreeRTOS > CONFIG_FREERTOS_USE_TICKLESS_IDLE

FreeRTOS will enter light sleep mode if no tasks need to run for this number of ticks.

Range:

- from 2 to 4294967295 if *CONFIG_FREERTOS_USE_TICKLESS_IDLE*

Default value:

- 3 if *CONFIG_FREERTOS_USE_TICKLESS_IDLE*

CONFIG_FREERTOS_TASK_FUNCTION_WRAPPER

Enclose all task functions in a wrapper function

Found in: Component config > FreeRTOS

If enabled, all FreeRTOS task functions will be enclosed in a wrapper function. If a task function mistakenly returns (i.e. does not delete), the call flow will return to the wrapper function. The wrapper function will then log an error and abort the application. This option is also required for GDB backtraces and C++ exceptions to work correctly inside top-level task functions.

Default value:

- Yes (enabled)

CONFIG_FREERTOS_CHECK_MUTEX_GIVEN_BY_OWNER

Check that mutex semaphore is given by owner task

Found in: Component config > FreeRTOS

If enabled, assert that when a mutex semaphore is given, the task giving the semaphore is the task which is currently holding the mutex.

Default value:

- Yes (enabled)

CONFIG_FREERTOS_CHECK_PORT_CRITICAL_COMPLIANCE

Tests compliance with Vanilla FreeRTOS port*_CRITICAL calls

Found in: Component config > FreeRTOS

If enabled, context of port*_CRITICAL calls (ISR or Non-ISR) would be checked to be in compliance with Vanilla FreeRTOS. e.g Calling port*_CRITICAL from ISR context would cause assert failure

Default value:

- No (disabled)

CONFIG_FREERTOS_PLACE_FUNCTIONS_INTO_FLASH

Place FreeRTOS functions into Flash

Found in: Component config > FreeRTOS

When enabled the selected Non-ISR FreeRTOS functions will be placed into Flash memory instead of IRAM. This saves up to 8KB of IRAM depending on which functions are used.

Default value:

- No (disabled)

CONFIG_FREERTOS_FPU_IN_ISR

Allow use of float inside Level 1 ISR (EXPERIMENTAL)

Found in: Component config > FreeRTOS

When enabled, the usage of float type is allowed inside Level 1 ISRs.

Default value:

- No (disabled)

CONFIG_FREERTOS_ENABLE_TASK_SNAPSHOT

Enable task snapshot functions

Found in: Component config > FreeRTOS

When enabled, the functions related to snapshots, such as vTaskGetSnapshot or uxTaskGetSnapshotAll, are compiled and linked.

Default value:

- Yes (enabled)

CONFIG_FREERTOS_PLACE_SNAPSHOT_FUNS_INTO_FLASH

Place task snapshot functions into flash

Found in: Component config > FreeRTOS > CONFIG_FREERTOS_ENABLE_TASK_SNAPSHOT

When enabled, the functions related to snapshots, such as vTaskGetSnapshot or uxTaskGetSnapshotAll, will be placed in flash. Note that if enabled, these functions cannot be called when cache is disabled.

Default value:

- No (disabled) if *CONFIG_FREERTOS_ENABLE_TASK_SNAPSHOT* && *CONFIG_ESP_PANIC_HANDLER_IRAM*

Hardware Abstraction Layer (HAL) and Low Level (LL)

Contains:

- *CONFIG_HAL_DEFAULT_ASSERTION_LEVEL*

CONFIG_HAL_DEFAULT_ASSERTION_LEVEL

Default HAL assertion level

Found in: Component config > Hardware Abstraction Layer (HAL) and Low Level (LL)

Set the assert behavior / level for HAL component. HAL component assert level can be set separately, but the level can't exceed the system assertion level. e.g. If the system assertion is disabled, then the HAL assertion can't be enabled either. If the system assertion is enable, then the HAL assertion can still be disabled by this Kconfig option.

Available options:

- Same as system assertion level (HAL_ASSERTION_EQUALS_SYSTEM)

- Disabled (HAL_ASSERTION_DISABLE)
- Silent (HAL_ASSERTION_SILIENT)
- Enabled (HAL_ASSERTION_ENABLE)

Heap memory debugging Contains:

- *CONFIG_HEAP_ABORT_WHEN_ALLOCATION_FAILS*
- *CONFIG_HEAP_TASK_TRACKING*
- *CONFIG_HEAP_CORRUPTION_DETECTION*
- *CONFIG_HEAP_TRACING_DEST*
- *CONFIG_HEAP_TRACING_STACK_DEPTH*

CONFIG_HEAP_CORRUPTION_DETECTION

Heap corruption detection

Found in: Component config > Heap memory debugging

Enable heap poisoning features to detect heap corruption caused by out-of-bounds access to heap memory.

See the "Heap Memory Debugging" page of the IDF documentation for a description of each level of heap corruption detection.

Available options:

- Basic (no poisoning) (HEAP_POISONING_DISABLED)
- Light impact (HEAP_POISONING_LIGHT)
- Comprehensive (HEAP_POISONING_COMPREHENSIVE)

CONFIG_HEAP_TRACING_DEST

Heap tracing

Found in: Component config > Heap memory debugging

Enables the heap tracing API defined in esp_heap_trace.h.

This function causes a moderate increase in IRAM code side and a minor increase in heap function (malloc/free/realloc) CPU overhead, even when the tracing feature is not used. So it's best to keep it disabled unless tracing is being used.

Available options:

- Disabled (HEAP_TRACING_OFF)
- Standalone (HEAP_TRACING_STANDALONE)
- Host-based (HEAP_TRACING_TOHOST)

CONFIG_HEAP_TRACING_STACK_DEPTH

Heap tracing stack depth

Found in: Component config > Heap memory debugging

Number of stack frames to save when tracing heap operation callers.

More stack frames uses more memory in the heap trace buffer (and slows down allocation), but can provide useful information.

CONFIG_HEAP_TASK_TRACKING

Enable heap task tracking

Found in: Component config > Heap memory debugging

Enables tracking the task responsible for each heap allocation.

This function depends on heap poisoning being enabled and adds four more bytes of overhead for each block allocated.

CONFIG_HEAP_ABORT_WHEN_ALLOCATION_FAILS

Abort if memory allocation fails

Found in: Component config > Heap memory debugging

When enabled, if a memory allocation operation fails it will cause a system abort.

Default value:

- No (disabled)

jsmn Contains:

- *CONFIG_JSMN_PARENT_LINKS*
- *CONFIG_JSMN_STRICT*

CONFIG_JSMN_PARENT_LINKS

Enable parent links

Found in: Component config > jsmn

You can access to parent node of parsed json

Default value:

- No (disabled)

CONFIG_JSMN_STRICT

Enable strict mode

Found in: Component config > jsmn

In strict mode primitives are: numbers and booleans

Default value:

- No (disabled)

libsodium Contains:

- *CONFIG_LIBSODIUM_USE_MBEDTLS_SHA*

CONFIG_LIBSODIUM_USE_MBEDTLS_SHA

Use mbedTLS SHA256 & SHA512 implementations

Found in: Component config > libsodium

If this option is enabled, libsodium will use thin wrappers around mbedTLS for SHA256 & SHA512 operations.

This saves some code size if mbedTLS is also used. However it is incompatible with hardware SHA acceleration (due to the way libsodium's API manages SHA state).

Default value:

- Yes (enabled)

Log output Contains:

- *CONFIG_LOG_DEFAULT_LEVEL*
- *CONFIG_LOG_TIMESTAMP_SOURCE*
- *CONFIG_LOG_MAXIMUM_LEVEL*
- *CONFIG_LOG_COLORS*

CONFIG_LOG_DEFAULT_LEVEL

Default log verbosity

Found in: Component config > Log output

Specify how much output to see in logs by default. You can set lower verbosity level at runtime using esp_log_level_set function.

By default, this setting limits which log statements are compiled into the program. For example, selecting "Warning" would mean that changing log level to "Debug" at runtime will not be possible. To allow increasing log level above the default at runtime, see the next option.

Available options:

- No output (LOG_DEFAULT_LEVEL_NONE)
- Error (LOG_DEFAULT_LEVEL_ERROR)
- Warning (LOG_DEFAULT_LEVEL_WARN)
- Info (LOG_DEFAULT_LEVEL_INFO)
- Debug (LOG_DEFAULT_LEVEL_DEBUG)
- Verbose (LOG_DEFAULT_LEVEL_VERBOSE)

CONFIG_LOG_MAXIMUM_LEVEL

Maximum log verbosity

Found in: Component config > Log output

This config option sets the highest log verbosity that it's possible to select at runtime by calling esp_log_level_set(). This level may be higher than the default verbosity level which is set when the app starts up.

This can be used enable debugging output only at a critical point, for a particular tag, or to minimize startup time but then enable more logs once the firmware has loaded.

Note that increasing the maximum available log level will increase the firmware binary size.

This option only applies to logging from the app, the bootloader log level is fixed at compile time to the separate "Bootloader log verbosity" setting.

Available options:

- Same as default (LOG_MAXIMUM_EQUALS_DEFAULT)
- Error (LOG_MAXIMUM_LEVEL_ERROR)
- Warning (LOG_MAXIMUM_LEVEL_WARN)
- Info (LOG_MAXIMUM_LEVEL_INFO)
- Debug (LOG_MAXIMUM_LEVEL_DEBUG)
- Verbose (LOG_MAXIMUM_LEVEL_VERBOSE)

CONFIG_LOG_COLORS

Use ANSI terminal colors in log output

Found in: Component config > Log output

Enable ANSI terminal color codes in bootloader output.

In order to view these, your terminal program must support ANSI color codes.

Default value:

- Yes (enabled)

CONFIG_LOG_TIMESTAMP_SOURCE

Log Timestamps

Found in: Component config > Log output

Choose what sort of timestamp is displayed in the log output:

- Milliseconds since boot is calulated from the RTOS tick count multiplied by the tick period. This time will reset after a software reboot. e.g. (90000)
- System time is taken from POSIX time functions which use the ESP32's RTC and FRC1 timers to maintain an accurate time. The system time is initialized to 0 on startup, it can be set with an SNTP sync, or with POSIX time functions. This time will not reset after a software reboot. e.g. (00:01:30.000)
- NOTE: Currently this will not get used in logging from binary blobs (i.e WiFi & Bluetooth libraries), these will always print milliseconds since boot.

Available options:

- Milliseconds Since Boot (LOG_TIMESTAMP_SOURCE_RTOS)
- System Time (LOG_TIMESTAMP_SOURCE_SYSTEM)

LWIP

Contains:

- *Checksums*
- *DHCP server*
- *CONFIG_LWIP_DHCP_OPTIONS_LEN*
- *CONFIG_LWIP_DHCP_DISABLE_CLIENT_ID*
- *CONFIG_LWIP_DHCP_DISABLE_VENDOR_CLASS_ID*
- *CONFIG_LWIP_DHCP_DOES_ARP_CHECK*
- *CONFIG_LWIP_DHCP_RESTORE_LAST_IP*
- *CONFIG_LWIP_PPP_CHAP_SUPPORT*
- *CONFIG_LWIP_L2_TO_L3_COPY*
- *CONFIG_LWIP_IPV6_DHCP6*
- *CONFIG_LWIP_IP4_FRAG*
- *CONFIG_LWIP_IP6_FRAG*
- *CONFIG_LWIP_IP_FORWARD*
- *CONFIG_LWIP_NETBUF_RECVINFO*
- *CONFIG_LWIP_AUTOIP*
- *CONFIG_LWIP_IPV6*
- *CONFIG_LWIP_ENABLE_LCP_ECHO*
- *CONFIG_LWIP_ETHARP_TRUST_IP_MAC*
- *CONFIG_LWIP_ESP_LWIP_ASSERT*
- *CONFIG_LWIP_DEBUG*
- *CONFIG_LWIP_IRAM_OPTIMIZATION*
- *CONFIG_LWIP_STATS*
- *CONFIG_LWIP_TIMERS_ONDEMAND*
- *CONFIG_LWIP_DNS_SUPPORT_MDNS_QUERIES*
- *CONFIG_LWIP_PPP_MPPE_SUPPORT*
- *CONFIG_LWIP_PPP_MSCHAP_SUPPORT*
- *CONFIG_LWIP_PPP_NOTIFY_PHASE_SUPPORT*
- *CONFIG_LWIP_PPP_PAP_SUPPORT*
- *CONFIG_LWIP_PPP_DEBUG_ON*
- *CONFIG_LWIP_PPP_SUPPORT*
- *CONFIG_LWIP_IP4_REASSEMBLY*
- *CONFIG_LWIP_IP6_REASSEMBLY*
- *CONFIG_LWIP_SLIP_SUPPORT*
- *CONFIG_LWIP_SO_LINGER*
- *CONFIG_LWIP_SO_RCVBUF*

- *CONFIG_LWIP_SO_REUSE*
- *CONFIG_LWIP_NETIF_STATUS_CALLBACK*
- *CONFIG_LWIP_TCPIP_CORE_LOCKING*
- *CONFIG_LWIP_NETIF_API*
- *Hooks*
- *ICMP*
- *CONFIG_LWIP_LOCAL_HOSTNAME*
- *LWIP RAW API*
- *CONFIG_LWIP_IPV6_ND6_NUM_NEIGHBORS*
- *CONFIG_LWIP_IPV6_MEMP_NUM_ND6_QUEUE*
- *CONFIG_LWIP_MAX_SOCKETS*
- *CONFIG_LWIP_ESP_GRATUITOUS_ARP*
- *SNTP*
- *CONFIG_LWIP_USE_ONLY_LWIP_SELECT*
- *CONFIG_LWIP_NETIF_LOOPBACK*
- *TCP*
- *CONFIG_LWIP_TCPIP_TASK_AFFINITY*
- *CONFIG_LWIP_TCPIP_TASK_STACK_SIZE*
- *CONFIG_LWIP_TCPIP_RECVMBOX_SIZE*
- *UDP*
- *CONFIG_LWIP_IPV6_RDNSS_MAX_DNS_SERVERS*

CONFIG_LWIP_LOCAL_HOSTNAME

Local netif hostname

Found in: Component config > LWIP

The default name this device will report to other devices on the network. Could be updated at runtime with esp_netif_set_hostname()

Default value:

- "espressif"

CONFIG_LWIP_NETIF_API

Enable usage of standard POSIX APIs in LWIP

Found in: Component config > LWIP

If this feature is enabled, standard POSIX APIs: if_indextoname(), if_nametoindex() could be used to convert network interface index to name instead of IDF specific esp-netif APIs (such as esp_netif_get_netif_impl_name())

Default value:

- No (disabled)

CONFIG_LWIP_TCPIP_CORE_LOCKING

Enable tcpip core locking

Found in: Component config > LWIP

If Enable tcpip core locking,Creates a global mutex that is held during TCPIP thread operations.Can be locked by client code to perform lwIP operations without changing into TCPIP thread using callbacks. See LOCK_TCPIP_CORE() and UNLOCK_TCPIP_CORE().

If disable tcpip core locking,TCP IP will perform tasks through context switching.

Default value:

- No (disabled)

CONFIG_LWIP_DNS_SUPPORT_MDNS_QUERIES

Enable mDNS queries in resolving host name

Found in: Component config > LWIP

If this feature is enabled, standard API such as gethostbyname support .local addresses by sending one shot multicast mDNS query

Default value:

- Yes (enabled)

CONFIG_LWIP_L2_TO_L3_COPY

Enable copy between Layer2 and Layer3 packets

Found in: Component config > LWIP

If this feature is enabled, all traffic from layer2(WIFI Driver) will be copied to a new buffer before sending it to layer3(LWIP stack), freeing the layer2 buffer. Please be notified that the total layer2 receiving buffer is fixed and ESP32 currently supports 25 layer2 receiving buffer, when layer2 buffer runs out of memory, then the incoming packets will be dropped in hardware. The layer3 buffer is allocated from the heap, so the total layer3 receiving buffer depends on the available heap size, when heap runs out of memory, no copy will be sent to layer3 and packet will be dropped in layer2. Please make sure you fully understand the impact of this feature before enabling it.

Default value:

- No (disabled)

CONFIG_LWIP_IRAM_OPTIMIZATION

Enable LWIP IRAM optimization

Found in: Component config > LWIP

If this feature is enabled, some functions relating to RX/TX in LWIP will be put into IRAM, it can improve UDP/TCP throughput by >10% for single core mode, it doesn't help too much for dual core mode. On the other hand, it needs about 10KB IRAM for these optimizations.

If this feature is disabled, all lwip functions will be put into FLASH.

Default value:

- No (disabled)

CONFIG_LWIP_TIMERS_ONDEMAND

Enable LWIP Timers on demand

Found in: Component config > LWIP

If this feature is enabled, IGMP and MLD6 timers will be activated only when joining groups or receiving QUERY packets.

This feature will reduce the power consumption for applications which do not use IGMP and MLD6.

Default value:

- Yes (enabled)

CONFIG_LWIP_MAX_SOCKETS

Max number of open sockets

Found in: Component config > LWIP

Sockets take up a certain amount of memory, and allowing fewer sockets to be open at the same time conserves memory. Specify the maximum amount of sockets here. The valid value is from 1 to 16.

Range:
- from 1 to 16

Default value:
- 10

CONFIG_LWIP_USE_ONLY_LWIP_SELECT

Support LWIP socket select() only (DEPRECATED)

Found in: Component config > LWIP

This option is deprecated. Use VFS_SUPPORT_SELECT instead, which is the inverse of this option.

The virtual filesystem layer of select() redirects sockets to lwip_select() and non-socket file descriptors to their respective driver implementations. If this option is enabled then all calls of select() will be redirected to lwip_select(), therefore, select can be used for sockets only.

Default value:
- No (disabled)

CONFIG_LWIP_SO_LINGER

Enable SO_LINGER processing

Found in: Component config > LWIP

Enabling this option allows SO_LINGER processing. l_onoff = 1,l_linger can set the timeout.

If l_linger=0, When a connection is closed, TCP will terminate the connection. This means that TCP will discard any data packets stored in the socket send buffer and send an RST to the peer.

If l_linger!=0,Then closesocket() calls to block the process until the remaining data packets has been sent or timed out.

Default value:
- No (disabled)

CONFIG_LWIP_SO_REUSE

Enable SO_REUSEADDR option

Found in: Component config > LWIP

Enabling this option allows binding to a port which remains in TIME_WAIT.

Default value:
- Yes (enabled)

CONFIG_LWIP_SO_REUSE_RXTOALL

SO_REUSEADDR copies broadcast/multicast to all matches

Found in: Component config > LWIP > CONFIG_LWIP_SO_REUSE

Enabling this option means that any incoming broadcast or multicast packet will be copied to all of the local sockets that it matches (may be more than one if SO_REUSEADDR is set on the socket.)

This increases memory overhead as the packets need to be copied, however they are only copied per matching socket. You can safely disable it if you don't plan to receive broadcast or multicast traffic on more than one socket at a time.

Default value:
- Yes (enabled)

CONFIG_LWIP_SO_RCVBUF

Enable SO_RCVBUF option

Found in: Component config > LWIP

Enabling this option allows checking for available data on a netconn.

Default value:

- No (disabled)

CONFIG_LWIP_NETBUF_RECVINFO

Enable IP_PKTINFO option

Found in: Component config > LWIP

Enabling this option allows checking for the destination address of a received IPv4 Packet.

Default value:

- No (disabled)

CONFIG_LWIP_IP4_FRAG

Enable fragment outgoing IP4 packets

Found in: Component config > LWIP

Enabling this option allows fragmenting outgoing IP4 packets if their size exceeds MTU.

Default value:

- Yes (enabled)

CONFIG_LWIP_IP6_FRAG

Enable fragment outgoing IP6 packets

Found in: Component config > LWIP

Enabling this option allows fragmenting outgoing IP6 packets if their size exceeds MTU.

Default value:

- Yes (enabled)

CONFIG_LWIP_IP4_REASSEMBLY

Enable reassembly incoming fragmented IP4 packets

Found in: Component config > LWIP

Enabling this option allows reassemblying incoming fragmented IP4 packets.

Default value:

- No (disabled)

CONFIG_LWIP_IP6_REASSEMBLY

Enable reassembly incoming fragmented IP6 packets

Found in: Component config > LWIP

Enabling this option allows reassemblying incoming fragmented IP6 packets.

Default value:

- No (disabled)

CONFIG_LWIP_IP_FORWARD

Enable IP forwarding

Found in: Component config > LWIP

Enabling this option allows packets forwarding across multiple interfaces.

Default value:

- No (disabled)

CONFIG_LWIP_IPV4_NAPT

Enable NAT (new/experimental)

Found in: Component config > LWIP > CONFIG_LWIP_IP_FORWARD

Enabling this option allows Network Address and Port Translation.

Default value:

- No (disabled) if *CONFIG_LWIP_IP_FORWARD*

CONFIG_LWIP_STATS

Enable LWIP statistics

Found in: Component config > LWIP

Enabling this option allows LWIP statistics

Default value:

- No (disabled)

CONFIG_LWIP_ETHARP_TRUST_IP_MAC

Enable LWIP ARP trust

Found in: Component config > LWIP

Enabling this option allows ARP table to be updated.

If this option is enabled, the incoming IP packets cause the ARP table to be updated with the source MAC and IP addresses supplied in the packet. You may want to disable this if you do not trust LAN peers to have the correct addresses, or as a limited approach to attempt to handle spoofing. If disabled, lwIP will need to make a new ARP request if the peer is not already in the ARP table, adding a little latency. The peer *is* in the ARP table if it requested our address before. Also notice that this slows down input processing of every IP packet!

There are two known issues in real application if this feature is enabled: - The LAN peer may have bug to update the ARP table after the ARP entry is aged out. If the ARP entry on the LAN peer is aged out but failed to be updated, all IP packets sent from LWIP to the LAN peer will be dropped by LAN peer. - The LAN peer may not be trustful, the LAN peer may send IP packets to LWIP with two different MACs, but the same IP address. If this happens, the LWIP has problem to receive IP packets from LAN peer.

So the recommendation is to disable this option. Here the LAN peer means the other side to which the ESP station or soft-AP is connected.

Default value:

- No (disabled)

CONFIG_LWIP_ESP_GRATUITOUS_ARP

Send gratuitous ARP periodically

Found in: Component config > LWIP

Enable this option allows to send gratuitous ARP periodically.

This option solve the compatibility issues.If the ARP table of the AP is old, and the AP doesn't send ARP request to update it's ARP table, this will lead to the STA sending IP packet fail. Thus we send gratuitous ARP periodically to let AP update it's ARP table.

Default value:

- Yes (enabled)

CONFIG_LWIP_GARP_TMR_INTERVAL

GARP timer interval(seconds)

Found in: Component config > LWIP > CONFIG_LWIP_ESP_GRATUITOUS_ARP

Set the timer interval for gratuitous ARP. The default value is 60s

Default value:

- 60

CONFIG_LWIP_TCPIP_RECVMBOX_SIZE

TCPIP task receive mail box size

Found in: Component config > LWIP

Set TCPIP task receive mail box size. Generally bigger value means higher throughput but more memory. The value should be bigger than UDP/TCP mail box size.

Range:

- from 6 to 64 if *CONFIG_LWIP_WND_SCALE*
- from 6 to 1024 if *CONFIG_LWIP_WND_SCALE*

Default value:

- 32

CONFIG_LWIP_DHCP_DOES_ARP_CHECK

DHCP: Perform ARP check on any offered address

Found in: Component config > LWIP

Enabling this option performs a check (via ARP request) if the offered IP address is not already in use by another host on the network.

Default value:

- Yes (enabled)

CONFIG_LWIP_DHCP_DISABLE_CLIENT_ID

DHCP: Disable Use of HW address as client identification

Found in: Component config > LWIP

This option could be used to disable DHCP client identification with its MAC address. (Client id is used by DHCP servers to uniquely identify clients and are included in the DHCP packets as an option 61) Set this option to "y" in order to exclude option 61 from DHCP packets.

Default value:

- No (disabled)

CONFIG_LWIP_DHCP_DISABLE_VENDOR_CLASS_ID

DHCP: Disable Use of vendor class identification

Found in: Component config > LWIP

This option could be used to disable DHCP client vendor class identification. Set this option to "y" in order to exclude option 60 from DHCP packets.

Default value:

- Yes (enabled)

CONFIG_LWIP_DHCP_RESTORE_LAST_IP

DHCP: Restore last IP obtained from DHCP server

Found in: Component config > LWIP

When this option is enabled, DHCP client tries to re-obtain last valid IP address obtained from DHCP server. Last valid DHCP configuration is stored in nvs and restored after reset/power-up. If IP is still available, there is no need for sending discovery message to DHCP server and save some time.

Default value:

- No (disabled)

CONFIG_LWIP_DHCP_OPTIONS_LEN

DHCP total option length

Found in: Component config > LWIP

Set total length of outgoing DHCP option msg. Generally bigger value means it can carry more options and values. If your code meets LWIP_ASSERT due to option value is too long. Please increase the LWIP_DHCP_OPTIONS_LEN value.

Range:

- from 68 to 255

Default value:

- 68
- 108

DHCP server

Contains:

- *CONFIG_LWIP_DHCPS*

CONFIG_LWIP_DHCPS

DHCPS: Enable IPv4 Dynamic Host Configuration Protocol Server (DHCPS)

Found in: Component config > LWIP > DHCP server

Enabling this option allows the device to run the DHCP server (to dynamically assign IPv4 addresses to clients).

Default value:

- Yes (enabled)

CONFIG_LWIP_DHCPS_LEASE_UNIT

Multiplier for lease time, in seconds

Found in: Component config > LWIP > DHCP server > CONFIG_LWIP_DHCPS

The DHCP server is calculating lease time multiplying the sent and received times by this number of seconds per unit. The default is 60, that equals one minute.

Range:
- from 1 to 3600

Default value:
- 60

CONFIG_LWIP_DHCPS_MAX_STATION_NUM

Maximum number of stations

Found in: Component config > LWIP > DHCP server > CONFIG_LWIP_DHCPS

The maximum number of DHCP clients that are connected to the server. After this number is exceeded, DHCP server removes of the oldest device from it' s address pool, without notification.

Range:
- from 1 to 64

Default value:
- 8

CONFIG_LWIP_AUTOIP

Enable IPV4 Link-Local Addressing (AUTOIP)

Found in: Component config > LWIP

Enabling this option allows the device to self-assign an address in the 169.256/16 range if none is assigned statically or via DHCP.

See RFC 3927.

Default value:
- No (disabled)

Contains:

- *CONFIG_LWIP_AUTOIP_TRIES*
- *CONFIG_LWIP_AUTOIP_MAX_CONFLICTS*
- *CONFIG_LWIP_AUTOIP_RATE_LIMIT_INTERVAL*

CONFIG_LWIP_AUTOIP_TRIES

DHCP Probes before self-assigning IPv4 LL address

Found in: Component config > LWIP > CONFIG_LWIP_AUTOIP

DHCP client will send this many probes before self-assigning a link local address.

From LWIP help: "This can be set as low as 1 to get an AutoIP address very quickly, but you should be prepared to handle a changing IP address when DHCP overrides AutoIP." (In the case of ESP-IDF, this means multiple SYSTEM_EVENT_STA_GOT_IP events.)

Range:
- from 1 to 100 if *CONFIG_LWIP_AUTOIP*

Default value:
- 2 if *CONFIG_LWIP_AUTOIP*

CONFIG_LWIP_AUTOIP_MAX_CONFLICTS

Max IP conflicts before rate limiting

Found in: Component config > LWIP > CONFIG_LWIP_AUTOIP

If the AUTOIP functionality detects this many IP conflicts while self-assigning an address, it will go into a rate limited mode.

Range:
- from 1 to 100 if *CONFIG_LWIP_AUTOIP*

Default value:
- 9 if *CONFIG_LWIP_AUTOIP*

CONFIG_LWIP_AUTOIP_RATE_LIMIT_INTERVAL

Rate limited interval (seconds)

Found in: Component config > LWIP > CONFIG_LWIP_AUTOIP

If rate limiting self-assignment requests, wait this long between each request.

Range:
- from 5 to 120 if *CONFIG_LWIP_AUTOIP*

Default value:
- 20 if *CONFIG_LWIP_AUTOIP*

CONFIG_LWIP_IPV6

Enable IPv6

Found in: Component config > LWIP

Enable IPv6 function. If not use IPv6 function, set this option to n. If disabling LWIP_IPV6 then some other components (coap and asio) will no longer be available.

Default value:
- Yes (enabled)

CONFIG_LWIP_IPV6_AUTOCONFIG

Enable IPV6 stateless address autoconfiguration (SLAAC)

Found in: Component config > LWIP > CONFIG_LWIP_IPV6

Enabling this option allows the devices to IPV6 stateless address autoconfiguration (SLAAC).

See RFC 4862.

Default value:
- No (disabled)

CONFIG_LWIP_IPV6_NUM_ADDRESSES

Number of IPv6 addresses on each network interface

Found in: Component config > LWIP > CONFIG_LWIP_IPV6

The maximum number of IPv6 addresses on each interface. Any additional addresses will be discarded.

Default value:
- 3

CONFIG_LWIP_IPV6_FORWARD

Enable IPv6 forwarding between interfaces

Found in: Component config > LWIP > CONFIG_LWIP_IPV6

Forwarding IPv6 packets between interfaces is only required when acting as a router.

Default value:
- No (disabled)

CONFIG_LWIP_IPV6_RDNSS_MAX_DNS_SERVERS

Use IPv6 Router Advertisement Recursive DNS Server Option

Found in: Component config > LWIP

Use IPv6 Router Advertisement Recursive DNS Server Option (as per RFC 6106) to copy a defined maximum number of DNS servers to the DNS module. Set this option to a number of desired DNS servers advertised in the RA protocol. This feature is disabled when set to 0.

Default value:

- 0 if *CONFIG_LWIP_IPV6_AUTOCONFIG*

CONFIG_LWIP_IPV6_DHCP6

Enable DHCPv6 stateless address autoconfiguration

Found in: Component config > LWIP

Enable DHCPv6 for IPv6 stateless address autoconfiguration. Note that the dhcpv6 client has to be started using dhcp6_enable_stateless(netif); Note that the stateful address autoconfiguration is not supported.

Default value:

- No (disabled) if *CONFIG_LWIP_IPV6_AUTOCONFIG*

CONFIG_LWIP_NETIF_STATUS_CALLBACK

Enable status callback for network interfaces

Found in: Component config > LWIP

Enable callbacks when the network interface is up/down and addresses are changed.

Default value:

- No (disabled)

CONFIG_LWIP_NETIF_LOOPBACK

Support per-interface loopback

Found in: Component config > LWIP

Enabling this option means that if a packet is sent with a destination address equal to the interface's own IP address, it will "loop back" and be received by this interface.

Default value:

- Yes (enabled)

Contains:

- *CONFIG_LWIP_LOOPBACK_MAX_PBUFS*

CONFIG_LWIP_LOOPBACK_MAX_PBUFS

Max queued loopback packets per interface

Found in: Component config > LWIP > CONFIG_LWIP_NETIF_LOOPBACK

Configure the maximum number of packets which can be queued for loopback on a given interface. Reducing this number may cause packets to be dropped, but will avoid filling memory with queued packet data.

Range:

- from 0 to 16

Default value:

- 8

TCP Contains:

- *CONFIG_LWIP_TCP_WND_DEFAULT*
- *CONFIG_LWIP_TCP_SND_BUF_DEFAULT*
- *CONFIG_LWIP_TCP_RECVMBOX_SIZE*
- *CONFIG_LWIP_TCP_RTO_TIME*
- *CONFIG_LWIP_TCP_KEEP_CONNECTION_WHEN_IP_CHANGES*
- *CONFIG_LWIP_MAX_ACTIVE_TCP*
- *CONFIG_LWIP_MAX_LISTENING_TCP*
- *CONFIG_LWIP_TCP_MAXRTX*
- *CONFIG_LWIP_TCP_SYNMAXRTX*
- *CONFIG_LWIP_TCP_MSL*
- *CONFIG_LWIP_TCP_MSS*
- *CONFIG_LWIP_TCP_OVERSIZE*
- *CONFIG_LWIP_TCP_QUEUE_OOSEQ*
- *CONFIG_LWIP_TCP_SACK_OUT*
- *CONFIG_LWIP_WND_SCALE*
- *CONFIG_LWIP_TCP_HIGH_SPEED_RETRANSMISSION*
- *CONFIG_LWIP_TCP_TMR_INTERVAL*

CONFIG_LWIP_MAX_ACTIVE_TCP

Maximum active TCP Connections

Found in: Component config > LWIP > TCP

The maximum number of simultaneously active TCP connections. The practical maximum limit is determined by available heap memory at runtime.

Changing this value by itself does not substantially change the memory usage of LWIP, except for preventing new TCP connections after the limit is reached.

Range:
- from 1 to 1024

Default value:
- 16

CONFIG_LWIP_MAX_LISTENING_TCP

Maximum listening TCP Connections

Found in: Component config > LWIP > TCP

The maximum number of simultaneously listening TCP connections. The practical maximum limit is determined by available heap memory at runtime.

Changing this value by itself does not substantially change the memory usage of LWIP, except for preventing new listening TCP connections after the limit is reached.

Range:
- from 1 to 1024

Default value:
- 16

CONFIG_LWIP_TCP_HIGH_SPEED_RETRANSMISSION

TCP high speed retransmissions

Found in: Component config > LWIP > TCP

Speed up the TCP retransmission interval. If disabled, it is recommended to change the number of SYN retransmissions to 6, and TCP initial rto time to 3000.

Default value:

- Yes (enabled)

CONFIG_LWIP_TCP_MAXRTX

Maximum number of retransmissions of data segments

Found in: Component config > LWIP > TCP

Set maximum number of retransmissions of data segments.

Range:

- from 3 to 12

Default value:

- 12

CONFIG_LWIP_TCP_SYNMAXRTX

Maximum number of retransmissions of SYN segments

Found in: Component config > LWIP > TCP

Set maximum number of retransmissions of SYN segments.

Range:

- from 3 to 12

Default value:

- 6
- 12

CONFIG_LWIP_TCP_MSS

Maximum Segment Size (MSS)

Found in: Component config > LWIP > TCP

Set maximum segment size for TCP transmission.

Can be set lower to save RAM, the default value 1460(ipv4)/1440(ipv6) will give best throughput. IPv4 TCP_MSS Range: 576 <= TCP_MSS <= 1460 IPv6 TCP_MSS Range: 1220<= TCP_mSS <= 1440

Range:

- from 536 to 1460

Default value:

- 1440

CONFIG_LWIP_TCP_TMR_INTERVAL

TCP timer interval(ms)

Found in: Component config > LWIP > TCP

Set TCP timer interval in milliseconds.

Can be used to speed connections on bad networks. A lower value will redeliver unacked packets faster.

Default value:

- 250

CONFIG_LWIP_TCP_MSL

Maximum segment lifetime (MSL)

Found in: Component config > LWIP > TCP

Set maximum segment lifetime in in milliseconds.

Default value:

- 60000

CONFIG_LWIP_TCP_SND_BUF_DEFAULT

Default send buffer size

Found in: Component config > LWIP > TCP

Set default send buffer size for new TCP sockets.

Per-socket send buffer size can be changed at runtime with lwip_setsockopt(s, TCP_SNDBUF, ⋯).

This value must be at least 2x the MSS size, and the default is 4x the default MSS size.

Setting a smaller default SNDBUF size can save some RAM, but will decrease performance.

Range:

- from 2440 to 65535 if *CONFIG_LWIP_WND_SCALE*
- from 2440 to 1024000 if *CONFIG_LWIP_WND_SCALE*

Default value:

- 5744

CONFIG_LWIP_TCP_WND_DEFAULT

Default receive window size

Found in: Component config > LWIP > TCP

Set default TCP receive window size for new TCP sockets.

Per-socket receive window size can be changed at runtime with lwip_setsockopt(s, TCP_WINDOW, ⋯).

Setting a smaller default receive window size can save some RAM, but will significantly decrease performance.

Range:

- from 2440 to 65535 if *CONFIG_LWIP_WND_SCALE*
- from 2440 to 1024000 if *CONFIG_LWIP_WND_SCALE*

Default value:

- 5744

CONFIG_LWIP_TCP_RECVMBOX_SIZE

Default TCP receive mail box size

Found in: Component config > LWIP > TCP

Set TCP receive mail box size. Generally bigger value means higher throughput but more memory. The recommended value is: LWIP_TCP_WND_DEFAULT/TCP_MSS + 2, e.g. if LWIP_TCP_WND_DEFAULT=14360, TCP_MSS=1436, then the recommended receive mail box size is (14360/1436 + 2) = 12.

TCP receive mail box is a per socket mail box, when the application receives packets from TCP socket, LWIP core firstly posts the packets to TCP receive mail box and the application then fetches the packets from mail box. It means LWIP can caches maximum LWIP_TCP_RECCVMBOX_SIZE packets for each TCP socket, so the maximum possible cached TCP packets for all TCP sockets is

LWIP_TCP_RECCVMBOX_SIZE multiples the maximum TCP socket number. In other words, the bigger LWIP_TCP_RECVMBOX_SIZE means more memory. On the other hand, if the receiv mail box is too small, the mail box may be full. If the mail box is full, the LWIP drops the packets. So generally we need to make sure the TCP receive mail box is big enough to avoid packet drop between LWIP core and application.

Range:

- from 6 to 64 if *CONFIG_LWIP_WND_SCALE*
- from 6 to 1024 if *CONFIG_LWIP_WND_SCALE*

Default value:

- 6

CONFIG_LWIP_TCP_QUEUE_OOSEQ

Queue incoming out-of-order segments

Found in: Component config > LWIP > TCP

Queue incoming out-of-order segments for later use.

Disable this option to save some RAM during TCP sessions, at the expense of increased retransmissions if segments arrive out of order.

Default value:

- Yes (enabled)

CONFIG_LWIP_TCP_SACK_OUT

Support sending selective acknowledgements

Found in: Component config > LWIP > TCP

TCP will support sending selective acknowledgements (SACKs).

Default value:

- No (disabled)

CONFIG_LWIP_TCP_KEEP_CONNECTION_WHEN_IP_CHANGES

Keep TCP connections when IP changed

Found in: Component config > LWIP > TCP

This option is enabled when the following scenario happen: network dropped and reconnected, IP changes is like: 192.168.0.2->0.0.0.0->192.168.0.2

Disable this option to keep consistent with the original LWIP code behavior.

Default value:

- No (disabled)

CONFIG_LWIP_TCP_OVERSIZE

Pre-allocate transmit PBUF size

Found in: Component config > LWIP > TCP

Allows enabling "oversize" allocation of TCP transmission pbufs ahead of time, which can reduce the length of pbuf chains used for transmission.

This will not make a difference to sockets where Nagle's algorithm is disabled.

Default value of MSS is fine for most applications, 25% MSS may save some RAM when only transmitting small amounts of data. Disabled will have worst performance and fragmentation characteristics, but uses least RAM overall.

Available options:
- MSS (LWIP_TCP_OVERSIZE_MSS)
- 25% MSS (LWIP_TCP_OVERSIZE_QUARTER_MSS)
- Disabled (LWIP_TCP_OVERSIZE_DISABLE)

CONFIG_LWIP_WND_SCALE

Support TCP window scale

Found in: Component config > LWIP > TCP

Enable this feature to support TCP window scaling.

Default value:
- No (disabled) if *CONFIG_SPIRAM_TRY_ALLOCATE_WIFI_LWIP*

CONFIG_LWIP_TCP_RCV_SCALE

Set TCP receiving window scaling factor

Found in: Component config > LWIP > TCP > CONFIG_LWIP_WND_SCALE

Enable this feature to support TCP window scaling.

Range:
- from 0 to 14 if *CONFIG_LWIP_WND_SCALE*

Default value:
- 0 if *CONFIG_LWIP_WND_SCALE*

CONFIG_LWIP_TCP_RTO_TIME

Default TCP rto time

Found in: Component config > LWIP > TCP

Set default TCP rto time for a reasonable initial rto. In bad network environment, recommend set value of rto time to 1500.

Default value:
- 3000
- 1500

UDP

Contains:

- *CONFIG_LWIP_UDP_RECVMBOX_SIZE*
- *CONFIG_LWIP_MAX_UDP_PCBS*

CONFIG_LWIP_MAX_UDP_PCBS

Maximum active UDP control blocks

Found in: Component config > LWIP > UDP

The maximum number of active UDP "connections" (ie UDP sockets sending/receiving data). The practical maximum limit is determined by available heap memory at runtime.

Range:
- from 1 to 1024

Default value:
- 16

CONFIG_LWIP_UDP_RECVMBOX_SIZE

Default UDP receive mail box size

Found in: Component config > LWIP > UDP

Set UDP receive mail box size. The recommended value is 6.

UDP receive mail box is a per socket mail box, when the application receives packets from UDP socket, LWIP core firstly posts the packets to UDP receive mail box and the application then fetches the packets from mail box. It means LWIP can caches maximum UDP_RECCVMBOX_SIZE packets for each UDP socket, so the maximum possible cached UDP packets for all UDP sockets is UDP_RECCVMBOX_SIZE multiples the maximum UDP socket number. In other words, the bigger UDP_RECVMBOX_SIZE means more memory. On the other hand, if the receiv mail box is too small, the mail box may be full. If the mail box is full, the LWIP drops the packets. So generally we need to make sure the UDP receive mail box is big enough to avoid packet drop between LWIP core and application.

Range:
- from 6 to 64

Default value:
- 6

Checksums Contains:

- *CONFIG_LWIP_CHECKSUM_CHECK_ICMP*
- *CONFIG_LWIP_CHECKSUM_CHECK_IP*
- *CONFIG_LWIP_CHECKSUM_CHECK_UDP*

CONFIG_LWIP_CHECKSUM_CHECK_IP

Enable LWIP IP checksums

Found in: Component config > LWIP > Checksums

Enable checksum checking for received IP messages

Default value:
- No (disabled)

CONFIG_LWIP_CHECKSUM_CHECK_UDP

Enable LWIP UDP checksums

Found in: Component config > LWIP > Checksums

Enable checksum checking for received UDP messages

Default value:
- No (disabled)

CONFIG_LWIP_CHECKSUM_CHECK_ICMP

Enable LWIP ICMP checksums

Found in: Component config > LWIP > Checksums

Enable checksum checking for received ICMP messages

Default value:
- Yes (enabled)

CONFIG_LWIP_TCPIP_TASK_STACK_SIZE

TCP/IP Task Stack Size

Found in: Component config > LWIP

Configure TCP/IP task stack size, used by LWIP to process multi-threaded TCP/IP operations. Setting this stack too small will result in stack overflow crashes.

Range:
- from 2048 to 65536

Default value:
- 3072

CONFIG_LWIP_TCPIP_TASK_AFFINITY

TCP/IP task affinity

Found in: Component config > LWIP

Allows setting LwIP tasks affinity, i.e. whether the task is pinned to CPU0, pinned to CPU1, or allowed to run on any CPU. Currently this applies to "TCP/IP" task and "Ping" task.

Available options:
- No affinity (LWIP_TCPIP_TASK_AFFINITY_NO_AFFINITY)
- CPU0 (LWIP_TCPIP_TASK_AFFINITY_CPU0)
- CPU1 (LWIP_TCPIP_TASK_AFFINITY_CPU1)

CONFIG_LWIP_PPP_SUPPORT

Enable PPP support (new/experimental)

Found in: Component config > LWIP

Enable PPP stack. Now only PPP over serial is possible.

PPP over serial support is experimental and unsupported.

Default value:
- No (disabled)

Contains:

- *CONFIG_LWIP_PPP_ENABLE_IPV6*

CONFIG_LWIP_PPP_ENABLE_IPV6

Enable IPV6 support for PPP connections (IPV6CP)

Found in: Component config > LWIP > CONFIG_LWIP_PPP_SUPPORT

Enable IPV6 support in PPP for the local link between the DTE (processor) and DCE (modem). There are some modems which do not support the IPV6 addressing in the local link. If they are requested for IPV6CP negotiation, they may time out. This would in turn fail the configuration for the whole link. If your modem is not responding correctly to PPP Phase Network, try to disable IPV6 support.

Default value:
- Yes (enabled) if *CONFIG_LWIP_PPP_SUPPORT* && *CONFIG_LWIP_IPV6*

CONFIG_LWIP_IPV6_MEMP_NUM_ND6_QUEUE

Max number of IPv6 packets to queue during MAC resolution

Found in: Component config > LWIP

Config max number of IPv6 packets to queue during MAC resolution.

Range:
- from 3 to 20

Default value:
- 3

CONFIG_LWIP_IPV6_ND6_NUM_NEIGHBORS

Max number of entries in IPv6 neighbor cache

Found in: Component config > LWIP

Config max number of entries in IPv6 neighbor cache

Range:
- from 3 to 10

Default value:
- 5

CONFIG_LWIP_PPP_NOTIFY_PHASE_SUPPORT

Enable Notify Phase Callback

Found in: Component config > LWIP

Enable to set a callback which is called on change of the internal PPP state machine.

Default value:
- No (disabled) if *CONFIG_LWIP_PPP_SUPPORT*

CONFIG_LWIP_PPP_PAP_SUPPORT

Enable PAP support

Found in: Component config > LWIP

Enable Password Authentication Protocol (PAP) support

Default value:
- No (disabled) if *CONFIG_LWIP_PPP_SUPPORT*

CONFIG_LWIP_PPP_CHAP_SUPPORT

Enable CHAP support

Found in: Component config > LWIP

Enable Challenge Handshake Authentication Protocol (CHAP) support

Default value:
- No (disabled) if *CONFIG_LWIP_PPP_SUPPORT*

CONFIG_LWIP_PPP_MSCHAP_SUPPORT

Enable MSCHAP support

Found in: Component config > LWIP

Enable Microsoft version of the Challenge-Handshake Authentication Protocol (MSCHAP) support

Default value:
- No (disabled) if *CONFIG_LWIP_PPP_SUPPORT*

CONFIG_LWIP_PPP_MPPE_SUPPORT

Enable MPPE support

Found in: Component config > LWIP

Enable Microsoft Point-to-Point Encryption (MPPE) support

Default value:

- No (disabled) if *CONFIG_LWIP_PPP_SUPPORT*

CONFIG_LWIP_ENABLE_LCP_ECHO

Enable LCP ECHO

Found in: Component config > LWIP

Enable LCP echo keepalive requests

Default value:

- No (disabled) if *CONFIG_LWIP_PPP_SUPPORT*

CONFIG_LWIP_LCP_ECHOINTERVAL

Echo interval (s)

Found in: Component config > LWIP > CONFIG_LWIP_ENABLE_LCP_ECHO

Interval in seconds between keepalive LCP echo requests, 0 to disable.

Range:

- from 0 to 1000000 if *CONFIG_LWIP_ENABLE_LCP_ECHO*

Default value:

- 3 if *CONFIG_LWIP_ENABLE_LCP_ECHO*

CONFIG_LWIP_LCP_MAXECHOFAILS

Maximum echo failures

Found in: Component config > LWIP > CONFIG_LWIP_ENABLE_LCP_ECHO

Number of consecutive unanswered echo requests before failure is indicated.

Range:

- from 0 to 100000 if *CONFIG_LWIP_ENABLE_LCP_ECHO*

Default value:

- 3 if *CONFIG_LWIP_ENABLE_LCP_ECHO*

CONFIG_LWIP_PPP_DEBUG_ON

Enable PPP debug log output

Found in: Component config > LWIP

Enable PPP debug log output

Default value:

- No (disabled) if *CONFIG_LWIP_PPP_SUPPORT*

CONFIG_LWIP_SLIP_SUPPORT

Enable SLIP support (new/experimental)

Found in: Component config > LWIP

Enable SLIP stack. Now only SLIP over serial is possible.

SLIP over serial support is experimental and unsupported.

Default value:

- No (disabled)

Contains:

- *CONFIG_LWIP_SLIP_DEBUG_ON*

CONFIG_LWIP_SLIP_DEBUG_ON

Enable SLIP debug log output

Found in: Component config > LWIP > CONFIG_LWIP_SLIP_SUPPORT

Enable SLIP debug log output

Default value:

- No (disabled) if *CONFIG_LWIP_SLIP_SUPPORT*

ICMP Contains:

- *CONFIG_LWIP_ICMP*
- *CONFIG_LWIP_BROADCAST_PING*
- *CONFIG_LWIP_MULTICAST_PING*

CONFIG_LWIP_ICMP

ICMP: Enable ICMP

Found in: Component config > LWIP > ICMP

Enable ICMP module for check network stability

Default value:

- Yes (enabled)

CONFIG_LWIP_MULTICAST_PING

Respond to multicast pings

Found in: Component config > LWIP > ICMP

Default value:

- No (disabled)

CONFIG_LWIP_BROADCAST_PING

Respond to broadcast pings

Found in: Component config > LWIP > ICMP

Default value:

- No (disabled)

LWIP RAW API Contains:

- *CONFIG_LWIP_MAX_RAW_PCBS*

CONFIG_LWIP_MAX_RAW_PCBS

Maximum LWIP RAW PCBs

Found in: Component config > LWIP > LWIP RAW API

The maximum number of simultaneously active LWIP RAW protocol control blocks. The practical maximum limit is determined by available heap memory at runtime.

Range:
- from 1 to 1024

Default value:
- 16

SNTP Contains:

- *CONFIG_LWIP_SNTP_MAX_SERVERS*
- *CONFIG_LWIP_SNTP_UPDATE_DELAY*
- *CONFIG_LWIP_DHCP_GET_NTP_SRV*

CONFIG_LWIP_SNTP_MAX_SERVERS

Maximum number of NTP servers

Found in: Component config > LWIP > SNTP

Set maximum number of NTP servers used by LwIP SNTP module. First argument of sntp_setserver/sntp_setservername functions is limited to this value.

Range:
- from 1 to 16

Default value:
- 1

CONFIG_LWIP_DHCP_GET_NTP_SRV

Request NTP servers from DHCP

Found in: Component config > LWIP > SNTP

If enabled, LWIP will add 'NTP' to Parameter-Request Option sent via DHCP-request. DHCP server might reply with an NTP server address in option 42. SNTP callback for such replies should be set accordingly (see sntp_servermode_dhcp() func.)

Default value:
- No (disabled)

CONFIG_LWIP_DHCP_MAX_NTP_SERVERS

Maximum number of NTP servers aquired via DHCP

Found in: Component config > LWIP > SNTP > CONFIG_LWIP_DHCP_GET_NTP_SRV

Set maximum number of NTP servers aquired via DHCP-offer. Should be less or equal to "Maximum number of NTP servers", any extra servers would be just ignored.

Range:
- from 1 to 16 if *CONFIG_LWIP_DHCP_GET_NTP_SRV*

Default value:
- 1 if *CONFIG_LWIP_DHCP_GET_NTP_SRV*

CONFIG_LWIP_SNTP_UPDATE_DELAY

Request interval to update time (ms)

Found in: Component config > LWIP > SNTP

This option allows you to set the time update period via SNTP. Default is 1 hour. Must not be below 15 seconds by specification. (SNTPv4 RFC 4330 enforces a minimum update time of 15 seconds).

Range:
- from 15000 to 4294967295

Default value:
- 3600000

CONFIG_LWIP_ESP_LWIP_ASSERT

Enable LWIP ASSERT checks

Found in: Component config > LWIP

Enable this option keeps LWIP assertion checks enabled. It is recommended to keep this option enabled.

If asserts are disabled for the entire project, they are also disabled for LWIP and this option is ignored.

Default value:
- Yes (enabled) if COMPILER_OPTIMIZATION_ASSERTIONS_DISABLE

Hooks Contains:

- *CONFIG_LWIP_HOOK_ND6_GET_GW*
- *CONFIG_LWIP_HOOK_IP6_ROUTE*
- *CONFIG_LWIP_HOOK_NETCONN_EXTERNAL_RESOLVE*
- *CONFIG_LWIP_HOOK_TCP_ISN*

CONFIG_LWIP_HOOK_TCP_ISN

TCP ISN Hook

Found in: Component config > LWIP > Hooks

Enables to define a TCP ISN hook to randomize initial sequence number in TCP connection. The default TCP ISN algorithm used in IDF (standardized in RFC 6528) produces ISN by combining an MD5 of the new TCP id and a stable secret with the current time. This is because the lwIP implementation (*tcp_next_iss*) is not very strong, as it does not take into consideration any platform specific entropy source.

Set to LWIP_HOOK_TCP_ISN_CUSTOM to provide custom implementation. Set to LWIP_HOOK_TCP_ISN_NONE to use lwIP implementation.

Available options:
- No hook declared (LWIP_HOOK_TCP_ISN_NONE)
- Default implementation (LWIP_HOOK_TCP_ISN_DEFAULT)
- Custom implementation (LWIP_HOOK_TCP_ISN_CUSTOM)

CONFIG_LWIP_HOOK_IP6_ROUTE

IPv6 route Hook

Found in: Component config > LWIP > Hooks

Enables custom IPv6 route hook. Setting this to "default" provides weak implementation stub that could be overwritten in application code. Setting this to "custom" provides hook's declaration only and expects the application to implement it.

Available options:

- No hook declared (LWIP_HOOK_IP6_ROUTE_NONE)
- Default (weak) implementation (LWIP_HOOK_IP6_ROUTE_DEFAULT)
- Custom implementation (LWIP_HOOK_IP6_ROUTE_CUSTOM)

CONFIG_LWIP_HOOK_ND6_GET_GW

IPv6 get gateway Hook

Found in: Component config > LWIP > Hooks

Enables custom IPv6 route hook. Setting this to "default" provides weak implementation stub that could be overwritten in application code. Setting this to "custom" provides hook's declaration only and expects the application to implement it.

Available options:

- No hook declared (LWIP_HOOK_ND6_GET_GW_NONE)
- Default (weak) implementation (LWIP_HOOK_ND6_GET_GW_DEFAULT)
- Custom implementation (LWIP_HOOK_ND6_GET_GW_CUSTOM)

CONFIG_LWIP_HOOK_NETCONN_EXTERNAL_RESOLVE

Netconn external resolve Hook

Found in: Component config > LWIP > Hooks

Enables custom DNS resolve hook. Setting this to "default" provides weak implementation stub that could be overwritten in application code. Setting this to "custom" provides hook's declaration only and expects the application to implement it.

Available options:

- No hook declared (LWIP_HOOK_NETCONN_EXT_RESOLVE_NONE)
- Default (weak) implementation (LWIP_HOOK_NETCONN_EXT_RESOLVE_DEFAULT)
- Custom implementation (LWIP_HOOK_NETCONN_EXT_RESOLVE_CUSTOM)

CONFIG_LWIP_DEBUG

Enable LWIP Debug

Found in: Component config > LWIP

Enabling this option allows different kinds of lwIP debug output.

All lwIP debug features increase the size of the final binary.

Default value:

- No (disabled)

Contains:

- *CONFIG_LWIP_API_LIB_DEBUG*
- *CONFIG_LWIP_DHCP_DEBUG*
- *CONFIG_LWIP_DHCP_STATE_DEBUG*
- *CONFIG_LWIP_ETHARP_DEBUG*
- *CONFIG_LWIP_ICMP_DEBUG*
- *CONFIG_LWIP_ICMP6_DEBUG*
- *CONFIG_LWIP_IP_DEBUG*
- *CONFIG_LWIP_IP6_DEBUG*
- *CONFIG_LWIP_NETIF_DEBUG*
- *CONFIG_LWIP_PBUF_DEBUG*
- *CONFIG_LWIP_SNTP_DEBUG*
- *CONFIG_LWIP_SOCKETS_DEBUG*
- *CONFIG_LWIP_TCP_DEBUG*
- *CONFIG_LWIP_DEBUG_ESP_LOG*

CONFIG_LWIP_DEBUG_ESP_LOG

Route LWIP debugs through ESP_LOG interface

Found in: Component config > LWIP > CONFIG_LWIP_DEBUG

Enabling this option routes all enabled LWIP debugs through ESP_LOGD.

Default value:

- No (disabled) if *CONFIG_LWIP_DEBUG*

CONFIG_LWIP_NETIF_DEBUG

Enable netif debug messages

Found in: Component config > LWIP > CONFIG_LWIP_DEBUG

Default value:

- No (disabled) if *CONFIG_LWIP_DEBUG*

CONFIG_LWIP_PBUF_DEBUG

Enable pbuf debug messages

Found in: Component config > LWIP > CONFIG_LWIP_DEBUG

Default value:

- No (disabled) if *CONFIG_LWIP_DEBUG*

CONFIG_LWIP_ETHARP_DEBUG

Enable etharp debug messages

Found in: Component config > LWIP > CONFIG_LWIP_DEBUG

Default value:

- No (disabled) if *CONFIG_LWIP_DEBUG*

CONFIG_LWIP_API_LIB_DEBUG

Enable api lib debug messages

Found in: Component config > LWIP > CONFIG_LWIP_DEBUG

Default value:

- No (disabled) if *CONFIG_LWIP_DEBUG*

CONFIG_LWIP_SOCKETS_DEBUG

Enable socket debug messages

Found in: Component config > LWIP > CONFIG_LWIP_DEBUG

Default value:

- No (disabled) if *CONFIG_LWIP_DEBUG*

CONFIG_LWIP_IP_DEBUG

Enable IP debug messages

Found in: Component config > LWIP > CONFIG_LWIP_DEBUG

Default value:

- No (disabled) if *CONFIG_LWIP_DEBUG*

CONFIG_LWIP_ICMP_DEBUG

Enable ICMP debug messages

Found in: Component config > LWIP > CONFIG_LWIP_DEBUG

Default value:

- No (disabled) if *CONFIG_LWIP_DEBUG* && *CONFIG_LWIP_ICMP*

CONFIG_LWIP_DHCP_STATE_DEBUG

Enable DHCP state tracking

Found in: Component config > LWIP > CONFIG_LWIP_DEBUG

Default value:

- No (disabled) if *CONFIG_LWIP_DEBUG*

CONFIG_LWIP_DHCP_DEBUG

Enable DHCP debug messages

Found in: Component config > LWIP > CONFIG_LWIP_DEBUG

Default value:

- No (disabled) if *CONFIG_LWIP_DEBUG*

CONFIG_LWIP_IP6_DEBUG

Enable IP6 debug messages

Found in: Component config > LWIP > CONFIG_LWIP_DEBUG

Default value:

- No (disabled) if *CONFIG_LWIP_DEBUG*

CONFIG_LWIP_ICMP6_DEBUG

Enable ICMP6 debug messages

Found in: Component config > LWIP > CONFIG_LWIP_DEBUG

Default value:

- No (disabled) if *CONFIG_LWIP_DEBUG*

CONFIG_LWIP_TCP_DEBUG

Enable TCP debug messages

Found in: Component config > LWIP > CONFIG_LWIP_DEBUG

Default value:

- No (disabled) if *CONFIG_LWIP_DEBUG*

CONFIG_LWIP_SNTP_DEBUG

Enable SNTP debug messages

Found in: Component config > LWIP > CONFIG_LWIP_DEBUG

Default value:

- No (disabled) if *CONFIG_LWIP_DEBUG*

mbedTLS Contains:

- *CONFIG_MBEDTLS_ASYMMETRIC_CONTENT_LEN*
- *Certificate Bundle*
- *Certificates*
- *CONFIG_MBEDTLS_CHACHA20_C*
- *CONFIG_MBEDTLS_ECP_C*
- *CONFIG_MBEDTLS_CMAC_C*
- *CONFIG_MBEDTLS_ECDSA_DETERMINISTIC*
- *CONFIG_MBEDTLS_HARDWARE_AES*
- *CONFIG_MBEDTLS_ATCA_HW_ECDSA_SIGN*
- *CONFIG_MBEDTLS_ATCA_HW_ECDSA_VERIFY*
- *CONFIG_MBEDTLS_HARDWARE_MPI*
- *CONFIG_MBEDTLS_HARDWARE_SHA*
- *CONFIG_MBEDTLS_DEBUG*
- *CONFIG_MBEDTLS_ECP_RESTARTABLE*
- *CONFIG_MBEDTLS_HAVE_TIME*
- *CONFIG_MBEDTLS_RIPEMD160_C*
- *CONFIG_MBEDTLS_SHA512_C*
- *CONFIG_MBEDTLS_THREADING_C*
- *CONFIG_MBEDTLS_X509_CHECK_EXTENDED_KEY_USAGE*
- *CONFIG_MBEDTLS_X509_CHECK_KEY_USAGE*
- *CONFIG_MBEDTLS_LARGE_KEY_SOFTWARE_MPI*
- *CONFIG_MBEDTLS_HKDF_C*
- *CONFIG_MBEDTLS_SSL_PROTO_SSL3*
- *mbedTLS v2.28.x related*
- *CONFIG_MBEDTLS_MEM_ALLOC_MODE*
- *CONFIG_MBEDTLS_POLY1305_C*
- *CONFIG_MBEDTLS_SECURITY_RISKS*
- *CONFIG_MBEDTLS_SSL_ALPN*
- *CONFIG_MBEDTLS_SSL_PROTO_DTLS*
- *CONFIG_MBEDTLS_SSL_PROTO_GMTSSL1_1*
- *CONFIG_MBEDTLS_SSL_PROTO_TLS1*
- *CONFIG_MBEDTLS_SSL_PROTO_TLS1_1*
- *CONFIG_MBEDTLS_SSL_PROTO_TLS1_2*
- *CONFIG_MBEDTLS_SSL_RENEGOTIATION*
- *Symmetric Ciphers*
- *TLS Key Exchange Methods*
- *CONFIG_MBEDTLS_SSL_MAX_CONTENT_LEN*
- *CONFIG_MBEDTLS_TLS_MODE*
- *CONFIG_MBEDTLS_CLIENT_SSL_SESSION_TICKETS*
- *CONFIG_MBEDTLS_SERVER_SSL_SESSION_TICKETS*
- *CONFIG_MBEDTLS_ROM_MD5*
- *CONFIG_MBEDTLS_DYNAMIC_BUFFER*

CONFIG_MBEDTLS_MEM_ALLOC_MODE

Memory allocation strategy

Found in: Component config > mbedTLS

Allocation strategy for mbedTLS, essentially provides ability to allocate all required dynamic allocations from,

- Internal DRAM memory only
- External SPIRAM memory only
- Either internal or external memory based on default malloc() behavior in ESP-IDF
- Custom allocation mode, by overwriting calloc()/free() using mbedtls_platform_set_calloc_free() function
- Internal IRAM memory wherever applicable else internal DRAM

Recommended mode here is always internal (*), since that is most preferred from security perspective. But if application requirement does not allow sufficient free internal memory then alternate mode can be selected.

(*) In case of ESP32-S2/ESP32-S3, hardware allows encryption of external SPIRAM contents provided hardware flash encryption feature is enabled. In that case, using external SPIRAM allocation strategy is also safe choice from security perspective.

Available options:

- Internal memory (MBEDTLS_INTERNAL_MEM_ALLOC)
- External SPIRAM (MBEDTLS_EXTERNAL_MEM_ALLOC)
- Default alloc mode (MBEDTLS_DEFAULT_MEM_ALLOC)
- Custom alloc mode (MBEDTLS_CUSTOM_MEM_ALLOC)
- Internal IRAM (MBEDTLS_IRAM_8BIT_MEM_ALLOC)
  Allows to use IRAM memory region as 8bit accessible region.
  TLS input and output buffers will be allocated in IRAM section which is 32bit aligned memory. Every unaligned (8bit or 16bit) access will result in an exception and incur penalty of certain clock cycles per unaligned read/write.

CONFIG_MBEDTLS_SSL_MAX_CONTENT_LEN

TLS maximum message content length

Found in: Component config > mbedTLS

Maximum TLS message length (in bytes) supported by mbedTLS.

16384 is the default and this value is required to comply fully with TLS standards.

However you can set a lower value in order to save RAM. This is safe if the other end of the connection supports Maximum Fragment Length Negotiation Extension (max_fragment_length, see RFC6066) or you know for certain that it will never send a message longer than a certain number of bytes.

If the value is set too low, symptoms are a failed TLS handshake or a return value of MBEDTLS_ERR_SSL_INVALID_RECORD (-0x7200).

Range:

- from 512 to 16384

Default value:

- 16384

CONFIG_MBEDTLS_ASYMMETRIC_CONTENT_LEN

Asymmetric in/out fragment length

Found in: Component config > mbedTLS

If enabled, this option allows customizing TLS in/out fragment length in asymmetric way. Please note that enabling this with default values saves 12KB of dynamic memory per TLS connection.

Default value:

- Yes (enabled)

CONFIG_MBEDTLS_SSL_IN_CONTENT_LEN

TLS maximum incoming fragment length

Found in: Component config > mbedTLS > CONFIG_MBEDTLS_ASYMMETRIC_CONTENT_LEN

This defines maximum incoming fragment length, overriding default maximum content length (MBEDTLS_SSL_MAX_CONTENT_LEN).

Range:

- from 512 to 16384

Default value:

- 16384

CONFIG_MBEDTLS_SSL_OUT_CONTENT_LEN

TLS maximum outgoing fragment length

Found in: Component config > mbedTLS > CONFIG_MBEDTLS_ASYMMETRIC_CONTENT_LEN

This defines maximum outgoing fragment length, overriding default maximum content length (MBEDTLS_SSL_MAX_CONTENT_LEN).

Range:

- from 512 to 16384

Default value:

- 4096

CONFIG_MBEDTLS_DYNAMIC_BUFFER

Using dynamic TX/RX buffer

Found in: Component config > mbedTLS

Using dynamic TX/RX buffer. After enabling this option, mbedTLS will allocate TX buffer when need to send data and then free it if all data is sent, allocate RX buffer when need to receive data and then free it when all data is used or read by upper layer.

By default, when SSL is initialized, mbedTLS also allocate TX and RX buffer with the default value of "MBEDTLS_SSL_OUT_CONTENT_LEN" or "MBEDTLS_SSL_IN_CONTENT_LEN" , so to save more heap, users can set the options to be an appropriate value.

Default value:

- No (disabled) if *CONFIG_MBEDTLS_SSL_PROTO_DTLS* && *CONFIG_MBEDTLS_SSL_VARIABLE_BUFFER_LENGTH*

CONFIG_MBEDTLS_DYNAMIC_FREE_PEER_CERT

Free SSL peer certificate after its usage

Found in: Component config > mbedTLS > CONFIG_MBEDTLS_DYNAMIC_BUFFER

Free peer certificate after its usage in handshake process.

Default value:

- No (disabled) if *CONFIG_MBEDTLS_DYNAMIC_BUFFER*

CONFIG_MBEDTLS_DYNAMIC_FREE_CONFIG_DATA

Free private key and DHM data after its usage

Found in: Component config > mbedTLS > CONFIG_MBEDTLS_DYNAMIC_BUFFER

Free private key and DHM data after its usage in handshake process.

The option will decrease heap cost when handshake, but also lead to problem:

Becasue all certificate, private key and DHM data are freed so users should register certificate and private key to ssl config object again.

Default value:

- No (disabled) if *CONFIG_MBEDTLS_DYNAMIC_BUFFER*

CONFIG_MBEDTLS_DYNAMIC_FREE_CA_CERT

Free SSL CA certificate after its usage

Found in: Component config > mbedTLS > CONFIG_MBEDTLS_DYNAMIC_BUFFER > CONFIG_MBEDTLS_DYNAMIC_FREE_CONFIG_DATA

Free CA certificate after its usage in the handshake process. This option will decrease the heap footprint for the TLS handshake, but may lead to a problem: If the respective ssl object needs to perform the TLS handshake again, the CA certificate should once again be registered to the ssl object.

Default value:

- Yes (enabled) if *CONFIG_MBEDTLS_DYNAMIC_FREE_CONFIG_DATA*

CONFIG_MBEDTLS_DEBUG

Enable mbedTLS debugging

Found in: Component config > mbedTLS

Enable mbedTLS debugging functions at compile time.

If this option is enabled, you can include "mbedtls/esp_debug.h" and call mbedtls_esp_enable_debug_log() at runtime in order to enable mbedTLS debug output via the ESP log mechanism.

Default value:

- No (disabled)

CONFIG_MBEDTLS_DEBUG_LEVEL

Set mbedTLS debugging level

Found in: Component config > mbedTLS > CONFIG_MBEDTLS_DEBUG

Set mbedTLS debugging level

Available options:

- Warning (MBEDTLS_DEBUG_LEVEL_WARN)
- Info (MBEDTLS_DEBUG_LEVEL_INFO)
- Debug (MBEDTLS_DEBUG_LEVEL_DEBUG)
- Verbose (MBEDTLS_DEBUG_LEVEL_VERBOSE)

mbedTLS v2.28.x related Contains:

- *DTLS-based configurations*
- *CONFIG_MBEDTLS_SSL_CONTEXT_SERIALIZATION*
- *CONFIG_MBEDTLS_X509_TRUSTED_CERT_CALLBACK*
- *CONFIG_MBEDTLS_SSL_KEEP_PEER_CERTIFICATE*
- *CONFIG_MBEDTLS_ECDH_LEGACY_CONTEXT*
- *CONFIG_MBEDTLS_SSL_VARIABLE_BUFFER_LENGTH*

CONFIG_MBEDTLS_SSL_VARIABLE_BUFFER_LENGTH

Variable SSL buffer length

Found in: Component config > mbedTLS > mbedTLS v2.28.x related

This enables the SSL buffer to be resized automatically based on the negotiated maximum fragment length in each direction.

Default value:

- No (disabled)

CONFIG_MBEDTLS_ECDH_LEGACY_CONTEXT

Use a backward compatible ECDH context (Experimental)

Found in: Component config > mbedTLS > mbedTLS v2.28.x related

Use the legacy ECDH context format. Define this option only if you enable MBEDTLS_ECP_RESTARTABLE or if you want to access ECDH context fields directly.

Default value:

- Yes (enabled) if *CONFIG_MBEDTLS_ECDH_C* && *CONFIG_MBEDTLS_ECP_RESTARTABLE*

CONFIG_MBEDTLS_X509_TRUSTED_CERT_CALLBACK

Enable trusted certificate callbacks

Found in: Component config > mbedTLS > mbedTLS v2.28.x related

Enables users to configure the set of trusted certificates through a callback instead of a linked list.

See mbedTLS documentation for required API and more details.

Default value:

- No (disabled)

CONFIG_MBEDTLS_SSL_CONTEXT_SERIALIZATION

Enable serialization of the TLS context structures

Found in: Component config > mbedTLS > mbedTLS v2.28.x related

Enable serialization of the TLS context structures This is a local optimization in handling a single, potentially long-lived connection.

See mbedTLS documentation for required API and more details. Disabling this option will save some code size.

Default value:

- No (disabled)

CONFIG_MBEDTLS_SSL_KEEP_PEER_CERTIFICATE

Keep peer certificate after handshake completion

Found in: Component config > mbedTLS > mbedTLS v2.28.x related

Keep the peer's certificate after completion of the handshake. Disabling this option will save about 4kB of heap and some code size.

See mbedTLS documentation for required API and more details.

Default value:

- Yes (enabled) if *CONFIG_MBEDTLS_DYNAMIC_FREE_PEER_CERT*

DTLS-based configurations Contains:

- *CONFIG_MBEDTLS_SSL_DTLS_SRTP*
- *CONFIG_MBEDTLS_SSL_DTLS_CONNECTION_ID*

CONFIG_MBEDTLS_SSL_DTLS_CONNECTION_ID

Support for the DTLS Connection ID extension

Found in: Component config > mbedTLS > mbedTLS v2.28.x related > DTLS-based configurations

Enable support for the DTLS Connection ID extension which allows to identify DTLS connections across changes in the underlying transport. The Connection ID extension is still in draft state. Refer: version draft-ietf-tls-dtls-connection-id-05

Default value:

- No (disabled) if *CONFIG_MBEDTLS_SSL_PROTO_DTLS*

CONFIG_MBEDTLS_SSL_CID_IN_LEN_MAX

Maximum length of CIDs used for incoming DTLS messages

Found in: Component config > mbedTLS > mbedTLS v2.28.x related > DTLS-based configurations > CONFIG_MBEDTLS_SSL_DTLS_CONNECTION_ID

Maximum length of CIDs used for incoming DTLS messages

Range:

- from 0 to 32 if *CONFIG_MBEDTLS_SSL_DTLS_CONNECTION_ID*

Default value:

- 32 if *CONFIG_MBEDTLS_SSL_DTLS_CONNECTION_ID*

CONFIG_MBEDTLS_SSL_CID_OUT_LEN_MAX

Maximum length of CIDs used for outgoing DTLS messages

Found in: Component config > mbedTLS > mbedTLS v2.28.x related > DTLS-based configurations > CONFIG_MBEDTLS_SSL_DTLS_CONNECTION_ID

Maximum length of CIDs used for outgoing DTLS messages

Range:

- from 0 to 32 if *CONFIG_MBEDTLS_SSL_DTLS_CONNECTION_ID*

Default value:

- 32 if *CONFIG_MBEDTLS_SSL_DTLS_CONNECTION_ID*

CONFIG_MBEDTLS_SSL_CID_PADDING_GRANULARITY

Record plaintext padding (for DTLS 1.2)

Found in: Component config > mbedTLS > mbedTLS v2.28.x related > DTLS-based configurations > CONFIG_MBEDTLS_SSL_DTLS_CONNECTION_ID

Controls the use of record plaintext padding when using the Connection ID extension in DTLS 1.2.

The padding will always be chosen so that the length of the padded plaintext is a multiple of the value of this option.

Notes: A value of 1 means that no padding will be used for outgoing records. On systems lacking division instructions, a power of two should be preferred.

Range:

- from 0 to 32 if *CONFIG_MBEDTLS_SSL_DTLS_CONNECTION_ID*

Default value:

- 16 if *CONFIG_MBEDTLS_SSL_DTLS_CONNECTION_ID*

CONFIG_MBEDTLS_SSL_DTLS_SRTP

Enable support for negotiation of DTLS-SRTP (RFC 5764)

Found in: Component config > mbedTLS > mbedTLS v2.28.x related > DTLS-based configurations

Enable support for negotiation of DTLS-SRTP (RFC 5764) through the use_srtp extension.

See mbedTLS documentation for required API and more details. Disabling this option will save some code size.

Default value:

- No (disabled) if *CONFIG_MBEDTLS_SSL_PROTO_DTLS*

Certificate Bundle Contains:

- *CONFIG_MBEDTLS_CERTIFICATE_BUNDLE*

CONFIG_MBEDTLS_CERTIFICATE_BUNDLE

Enable trusted root certificate bundle

Found in: Component config > mbedTLS > Certificate Bundle

Enable support for large number of default root certificates

When enabled this option allows user to store default as well as customer specific root certificates in compressed format rather than storing full certificate. For the root certificates the public key and the subject name will be stored.

Default value:

- Yes (enabled)

CONFIG_MBEDTLS_DEFAULT_CERTIFICATE_BUNDLE

Default certificate bundle options

Found in: Component config > mbedTLS > Certificate Bundle > CONFIG_MBEDTLS_CERTIFICATE_BUNDLE

Available options:

- Use the full default certificate bundle (MBEDTLS_CERTIFICATE_BUNDLE_DEFAULT_FULL)
- Use only the most common certificates from the default bundles (MBEDTLS_CERTIFICATE_BUNDLE_DEFAULT_CMN)
  Use only the most common certificates from the default bundles, reducing the size with 50%, while still having around 99% coverage.
- Do not use the default certificate bundle (MBEDTLS_CERTIFICATE_BUNDLE_DEFAULT_NONE)

CONFIG_MBEDTLS_CUSTOM_CERTIFICATE_BUNDLE

Add custom certificates to the default bundle

Found in: Component config > mbedTLS > Certificate Bundle > CONFIG_MBEDTLS_CERTIFICATE_BUNDLE

Default value:

- No (disabled)

CONFIG_MBEDTLS_CUSTOM_CERTIFICATE_BUNDLE_PATH

Custom certificate bundle path

Found in: Component config > mbedTLS > Certificate Bundle > CONFIG_MBEDTLS_CERTIFICATE_BUNDLE > CONFIG_MBEDTLS_CUSTOM_CERTIFICATE_BUNDLE

Name of the custom certificate directory or file. This path is evaluated relative to the project root directory.

CONFIG_MBEDTLS_CERTIFICATE_BUNDLE_MAX_CERTS

Maximum no of certificates allowed in certificate bundle

Found in: Component config > mbedTLS > Certificate Bundle > CONFIG_MBEDTLS_CERTIFICATE_BUNDLE

Default value:

- 200

CONFIG_MBEDTLS_ECP_RESTARTABLE

Enable mbedTLS ecp restartable

Found in: Component config > mbedTLS

Enable "non-blocking" ECC operations that can return early and be resumed.

Default value:

- No (disabled)

CONFIG_MBEDTLS_CMAC_C

Enable CMAC mode for block ciphers

Found in: Component config > mbedTLS

Enable the CMAC (Cipher-based Message Authentication Code) mode for block ciphers.

Default value:

- No (disabled)

CONFIG_MBEDTLS_HARDWARE_AES

Enable hardware AES acceleration

Found in: Component config > mbedTLS

Enable hardware accelerated AES encryption & decryption.

Note that if the ESP32 CPU is running at 240MHz, hardware AES does not offer any speed boost over software AES.

Default value:

- Yes (enabled) if SPIRAM_CACHE_WORKAROUND_STRATEGY_DUPLDST

CONFIG_MBEDTLS_HARDWARE_MPI

Enable hardware MPI (bignum) acceleration

Found in: Component config > mbedTLS

Enable hardware accelerated multiple precision integer operations.

Hardware accelerated multiplication, modulo multiplication, and modular exponentiation for up to SOC_RSA_MAX_BIT_LEN bit results.

These operations are used by RSA.

Default value:

- Yes (enabled) if SPIRAM_CACHE_WORKAROUND_STRATEGY_DUPLDST

CONFIG_MBEDTLS_HARDWARE_SHA

Enable hardware SHA acceleration

Found in: Component config > mbedTLS

Enable hardware accelerated SHA1, SHA256, SHA384 & SHA512 in mbedTLS.

Due to a hardware limitation, on the ESP32 hardware acceleration is only guaranteed if SHA digests are calculated one at a time. If more than one SHA digest is calculated at the same time, one will be calculated fully in hardware and the rest will be calculated (at least partially calculated) in software. This happens automatically.

SHA hardware acceleration is faster than software in some situations but slower in others. You should benchmark to find the best setting for you.

Default value:

- Yes (enabled) if SPIRAM_CACHE_WORKAROUND_STRATEGY_DUPLDST

CONFIG_MBEDTLS_ROM_MD5

Use MD5 implementation in ROM

Found in: Component config > mbedTLS

Use ROM MD5 in mbedTLS.

Default value:

- Yes (enabled)

CONFIG_MBEDTLS_ATCA_HW_ECDSA_SIGN

Enable hardware ECDSA sign acceleration when using ATECC608A

Found in: Component config > mbedTLS

This option enables hardware acceleration for ECDSA sign function, only when using ATECC608A cryptoauth chip (integrated with ESP32-WROOM-32SE)

Default value:

- No (disabled)

CONFIG_MBEDTLS_ATCA_HW_ECDSA_VERIFY

Enable hardware ECDSA verify acceleration when using ATECC608A

Found in: Component config > mbedTLS

This option enables hardware acceleration for ECDSA sign function, only when using ATECC608A cryptoauth chip (integrated with ESP32-WROOM-32SE)

Default value:

- No (disabled)

CONFIG_MBEDTLS_HAVE_TIME

Enable mbedtls time support

Found in: Component config > mbedTLS

Enable use of time.h functions (time() and gmtime()) by mbedTLS.

This option doesn't require the system time to be correct, but enables functionality that requires relative timekeeping - for example periodic expiry of TLS session tickets or session cache entries.

Disabling this option will save some firmware size, particularly if the rest of the firmware doesn't call any standard timekeeeping functions.

Default value:

- Yes (enabled)

CONFIG_MBEDTLS_HAVE_TIME_DATE

Enable mbedtls certificate expiry check

Found in: Component config > mbedTLS > CONFIG_MBEDTLS_HAVE_TIME

Enables X.509 certificate expiry checks in mbedTLS.

If this option is disabled (default) then X.509 certificate "valid from" and "valid to" timestamp fields are ignored.

If this option is enabled, these fields are compared with the current system date and time. The time is retrieved using the standard time() and gmtime() functions. If the certificate is not valid for the current system time then verification will fail with code MBEDTLS_X509_BADCERT_FUTURE or MBEDTLS_X509_BADCERT_EXPIRED.

Enabling this option requires adding functionality in the firmware to set the system clock to a valid timestamp before using TLS. The recommended way to do this is via ESP-IDF's SNTP functionality, but any method can be used.

In the case where only a small number of certificates are trusted by the device, please carefully consider the tradeoffs of enabling this option. There may be undesired consequences, for example if all trusted certificates expire while the device is offline and a TLS connection is required to update. Or if an issue with the SNTP server means that the system time is invalid for an extended period after a reset.

Default value:

- No (disabled)

CONFIG_MBEDTLS_ECDSA_DETERMINISTIC

Enable deterministic ECDSA

Found in: Component config > mbedTLS

Standard ECDSA is "fragile" in the sense that lack of entropy when signing may result in a compromise of the long-term signing key.

Default value:

- Yes (enabled)

CONFIG_MBEDTLS_SHA512_C

Enable the SHA-384 and SHA-512 cryptographic hash algorithms

Found in: Component config > mbedTLS

Enable MBEDTLS_SHA512_C adds support for SHA-384 and SHA-512.

Default value:

- Yes (enabled)

CONFIG_MBEDTLS_TLS_MODE

TLS Protocol Role

Found in: Component config > mbedTLS

mbedTLS can be compiled with protocol support for the TLS server, TLS client, or both server and client.

Reducing the number of TLS roles supported saves code size.

Available options:

- Server & Client (MBEDTLS_TLS_SERVER_AND_CLIENT)
- Server (MBEDTLS_TLS_SERVER_ONLY)
- Client (MBEDTLS_TLS_CLIENT_ONLY)
- None (MBEDTLS_TLS_DISABLED)

TLS Key Exchange Methods

Contains:

- *CONFIG_MBEDTLS_KEY_EXCHANGE_DHE_RSA*
- *CONFIG_MBEDTLS_KEY_EXCHANGE_ECJPAKE*
- *CONFIG_MBEDTLS_PSK_MODES*
- *CONFIG_MBEDTLS_KEY_EXCHANGE_RSA*
- *CONFIG_MBEDTLS_KEY_EXCHANGE_ELLIPTIC_CURVE*

CONFIG_MBEDTLS_PSK_MODES

Enable pre-shared-key ciphersuites

Found in: Component config > mbedTLS > TLS Key Exchange Methods

Enable to show configuration for different types of pre-shared-key TLS authentatication methods.

Leaving this options disabled will save code size if they are not used.

Default value:

- No (disabled)

CONFIG_MBEDTLS_KEY_EXCHANGE_PSK

Enable PSK based ciphersuite modes

Found in: Component config > mbedTLS > TLS Key Exchange Methods > CONFIG_MBEDTLS_PSK_MODES

Enable to support symmetric key PSK (pre-shared-key) TLS key exchange modes.

Default value:

- No (disabled) if *CONFIG_MBEDTLS_PSK_MODES*

CONFIG_MBEDTLS_KEY_EXCHANGE_DHE_PSK

Enable DHE-PSK based ciphersuite modes

Found in: Component config > mbedTLS > TLS Key Exchange Methods > CONFIG_MBEDTLS_PSK_MODES

Enable to support Diffie-Hellman PSK (pre-shared-key) TLS authentication modes.

Default value:

- Yes (enabled) if *CONFIG_MBEDTLS_PSK_MODES*

CONFIG_MBEDTLS_KEY_EXCHANGE_ECDHE_PSK

Enable ECDHE-PSK based ciphersuite modes

Found in: Component config > mbedTLS > TLS Key Exchange Methods > CONFIG_MBEDTLS_PSK_MODES

Enable to support Elliptic-Curve-Diffie-Hellman PSK (pre-shared-key) TLS authentication modes.

Default value:

- Yes (enabled) if *CONFIG_MBEDTLS_PSK_MODES* && *CONFIG_MBEDTLS_ECDH_C*

CONFIG_MBEDTLS_KEY_EXCHANGE_RSA_PSK

Enable RSA-PSK based ciphersuite modes

Found in: Component config > mbedTLS > TLS Key Exchange Methods > CONFIG_MBEDTLS_PSK_MODES

Enable to support RSA PSK (pre-shared-key) TLS authentication modes.

Default value:

- Yes (enabled) if *CONFIG_MBEDTLS_PSK_MODES*

CONFIG_MBEDTLS_KEY_EXCHANGE_RSA

Enable RSA-only based ciphersuite modes

Found in: Component config > mbedTLS > TLS Key Exchange Methods

Enable to support ciphersuites with prefix TLS-RSA-WITH-

Default value:

- Yes (enabled)

CONFIG_MBEDTLS_KEY_EXCHANGE_DHE_RSA

Enable DHE-RSA based ciphersuite modes

Found in: Component config > mbedTLS > TLS Key Exchange Methods

Enable to support ciphersuites with prefix TLS-DHE-RSA-WITH-

Default value:

- Yes (enabled)

CONFIG_MBEDTLS_KEY_EXCHANGE_ELLIPTIC_CURVE

Support Elliptic Curve based ciphersuites

Found in: Component config > mbedTLS > TLS Key Exchange Methods

Enable to show Elliptic Curve based ciphersuite mode options.

Disabling all Elliptic Curve ciphersuites saves code size and can give slightly faster TLS handshakes, provided the server supports RSA-only ciphersuite modes.

Default value:

- Yes (enabled)

CONFIG_MBEDTLS_KEY_EXCHANGE_ECDHE_RSA

Enable ECDHE-RSA based ciphersuite modes

Found in: Component config > mbedTLS > TLS Key Exchange Methods > CONFIG_MBEDTLS_KEY_EXCHANGE_ELLIPTIC_CURVE

Enable to support ciphersuites with prefix TLS-ECDHE-RSA-WITH-

Default value:

- Yes (enabled)

CONFIG_MBEDTLS_KEY_EXCHANGE_ECDHE_ECDSA

Enable ECDHE-ECDSA based ciphersuite modes

Found in: Component config > mbedTLS > TLS Key Exchange Methods > CONFIG_MBEDTLS_KEY_EXCHANGE_ELLIPTIC_CURVE

Enable to support ciphersuites with prefix TLS-ECDHE-RSA-WITH-

Default value:

- Yes (enabled)

CONFIG_MBEDTLS_KEY_EXCHANGE_ECDH_ECDSA

Enable ECDH-ECDSA based ciphersuite modes

Found in: Component config > mbedTLS > TLS Key Exchange Methods > CONFIG_MBEDTLS_KEY_EXCHANGE_ELLIPTIC_CURVE

Enable to support ciphersuites with prefix TLS-ECDHE-RSA-WITH-

Default value:

- Yes (enabled)

CONFIG_MBEDTLS_KEY_EXCHANGE_ECDH_RSA

Enable ECDH-RSA based ciphersuite modes

Found in: Component config > mbedTLS > TLS Key Exchange Methods > CONFIG_MBEDTLS_KEY_EXCHANGE_ELLIPTIC_CURVE

Enable to support ciphersuites with prefix TLS-ECDHE-RSA-WITH-

Default value:

- Yes (enabled)

CONFIG_MBEDTLS_KEY_EXCHANGE_ECJPAKE

Enable ECJPAKE based ciphersuite modes

Found in: Component config > mbedTLS > TLS Key Exchange Methods

Enable to support ciphersuites with prefix TLS-ECJPAKE-WITH-

Default value:

- No (disabled) if *CONFIG_MBEDTLS_ECJPAKE_C* && *CONFIG_MBEDTLS_ECP_DP_SECP256R1_ENABLED*

CONFIG_MBEDTLS_SSL_RENEGOTIATION

Support TLS renegotiation

Found in: Component config > mbedTLS

The two main uses of renegotiation are (1) refresh keys on long-lived connections and (2) client authentication after the initial handshake. If you don't need renegotiation, disabling it will save code size and reduce the possibility of abuse/vulnerability.

Default value:

- Yes (enabled)

CONFIG_MBEDTLS_SSL_PROTO_SSL3

Legacy SSL 3.0 support

Found in: Component config > mbedTLS

Support the legacy SSL 3.0 protocol. Most servers will speak a newer TLS protocol these days.

Default value:

- No (disabled)

CONFIG_MBEDTLS_SSL_PROTO_TLS1

Support TLS 1.0 protocol

Found in: Component config > mbedTLS

Default value:

- Yes (enabled)

CONFIG_MBEDTLS_SSL_PROTO_TLS1_1

Support TLS 1.1 protocol

Found in: Component config > mbedTLS

Default value:

- Yes (enabled)

CONFIG_MBEDTLS_SSL_PROTO_TLS1_2

Support TLS 1.2 protocol

Found in: Component config > mbedTLS

Default value:

- Yes (enabled)

CONFIG_MBEDTLS_SSL_PROTO_GMTSSL1_1

Support GM/T SSL 1.1 protocol

Found in: Component config > mbedTLS

Provisions for GM/T SSL 1.1 support

Default value:

- No (disabled)

CONFIG_MBEDTLS_SSL_PROTO_DTLS

Support DTLS protocol (all versions)

Found in: Component config > mbedTLS

Requires TLS 1.1 to be enabled for DTLS 1.0 Requires TLS 1.2 to be enabled for DTLS 1.2

Default value:

- No (disabled)

CONFIG_MBEDTLS_SSL_ALPN

Support ALPN (Application Layer Protocol Negotiation)

Found in: Component config > mbedTLS

Disabling this option will save some code size if it is not needed.

Default value:

- Yes (enabled)

CONFIG_MBEDTLS_CLIENT_SSL_SESSION_TICKETS

TLS: Client Support for RFC 5077 SSL session tickets

Found in: Component config > mbedTLS

Client support for RFC 5077 session tickets. See mbedTLS documentation for more details. Disabling this option will save some code size.

Default value:

- Yes (enabled)

CONFIG_MBEDTLS_X509_CHECK_KEY_USAGE

Enable verification of the keyUsage extension

Found in: Component config > mbedTLS

Disabling this avoids problems with mis-issued and/or misused (intermediate) CA and leaf certificates. Depending on your PKI use, disabling this can be a security risk.

Default value:

- Yes (enabled)

CONFIG_MBEDTLS_X509_CHECK_EXTENDED_KEY_USAGE

Enable verification of the extendedKeyUsage extension

Found in: Component config > mbedTLS

Disabling this avoids problems with mis-issued and/or misused certificates. Depending on your PKI use, disabling this can be a security risk.

Default value:

- Yes (enabled)

CONFIG_MBEDTLS_SERVER_SSL_SESSION_TICKETS

TLS: Server Support for RFC 5077 SSL session tickets

Found in: Component config > mbedTLS

Server support for RFC 5077 session tickets. See mbedTLS documentation for more details. Disabling this option will save some code size.

Default value:

- Yes (enabled)

Symmetric Ciphers Contains:

- *CONFIG_MBEDTLS_AES_C*
- *CONFIG_MBEDTLS_BLOWFISH_C*
- *CONFIG_MBEDTLS_CAMELLIA_C*
- *CONFIG_MBEDTLS_CCM_C*
- *CONFIG_MBEDTLS_DES_C*
- *CONFIG_MBEDTLS_GCM_C*
- *CONFIG_MBEDTLS_NIST_KW_C*
- *CONFIG_MBEDTLS_RC4_MODE*
- *CONFIG_MBEDTLS_XTEA_C*

CONFIG_MBEDTLS_AES_C

AES block cipher

Found in: Component config > mbedTLS > Symmetric Ciphers

Default value:

- Yes (enabled)

CONFIG_MBEDTLS_CAMELLIA_C

Camellia block cipher

Found in: Component config > mbedTLS > Symmetric Ciphers

Default value:

- No (disabled)

CONFIG_MBEDTLS_DES_C

DES block cipher (legacy, insecure)

Found in: Component config > mbedTLS > Symmetric Ciphers

Enables the DES block cipher to support 3DES-based TLS ciphersuites.

3DES is vulnerable to the Sweet32 attack and should only be enabled if absolutely necessary.

Default value:

- No (disabled)

CONFIG_MBEDTLS_RC4_MODE

RC4 Stream Cipher (legacy, insecure)

Found in: Component config > mbedTLS > Symmetric Ciphers

ARCFOUR (RC4) stream cipher can be disabled entirely, enabled but not added to default ciphersuites, or enabled completely.

Please consider the security implications before enabling RC4.

Available options:

- Disabled (MBEDTLS_RC4_DISABLED)
- Enabled, not in default ciphersuites (MBEDTLS_RC4_ENABLED_NO_DEFAULT)
- Enabled (MBEDTLS_RC4_ENABLED)

CONFIG_MBEDTLS_BLOWFISH_C

Blowfish block cipher (read help)

Found in: Component config > mbedTLS > Symmetric Ciphers

Enables the Blowfish block cipher (not used for TLS sessions.)

The Blowfish cipher is not used for mbedTLS TLS sessions but can be used for other purposes. Read up on the limitations of Blowfish (including Sweet32) before enabling.

Default value:

- No (disabled)

CONFIG_MBEDTLS_XTEA_C

XTEA block cipher

Found in: Component config > mbedTLS > Symmetric Ciphers

Enables the XTEA block cipher.

Default value:

- No (disabled)

CONFIG_MBEDTLS_CCM_C

CCM (Counter with CBC-MAC) block cipher modes

Found in: Component config > mbedTLS > Symmetric Ciphers

Enable Counter with CBC-MAC (CCM) modes for AES and/or Camellia ciphers.

Disabling this option saves some code size.

Default value:

- Yes (enabled)

CONFIG_MBEDTLS_GCM_C

GCM (Galois/Counter) block cipher modes

Found in: Component config > mbedTLS > Symmetric Ciphers

Enable Galois/Counter Mode for AES and/or Camellia ciphers.

This option is generally faster than CCM.

Default value:

- Yes (enabled)

CONFIG_MBEDTLS_NIST_KW_C

NIST key wrapping (KW) and KW padding (KWP)

Found in: Component config > mbedTLS > Symmetric Ciphers

Enable NIST key wrapping and key wrapping padding.

Default value:

- No (disabled)

CONFIG_MBEDTLS_RIPEMD160_C

Enable RIPEMD-160 hash algorithm

Found in: Component config > mbedTLS

Enable the RIPEMD-160 hash algorithm.

Default value:

- No (disabled)

Certificates Contains:

- *CONFIG_MBEDTLS_PEM_PARSE_C*
- *CONFIG_MBEDTLS_PEM_WRITE_C*
- *CONFIG_MBEDTLS_X509_CRL_PARSE_C*
- *CONFIG_MBEDTLS_X509_CSR_PARSE_C*

CONFIG_MBEDTLS_PEM_PARSE_C

Read & Parse PEM formatted certificates

Found in: Component config > mbedTLS > Certificates

Enable decoding/parsing of PEM formatted certificates.

If your certificates are all in the simpler DER format, disabling this option will save some code size.

Default value:

- Yes (enabled)

CONFIG_MBEDTLS_PEM_WRITE_C

Write PEM formatted certificates

Found in: Component config > mbedTLS > Certificates

Enable writing of PEM formatted certificates.

If writing certificate data only in DER format, disabling this option will save some code size.

Default value:

- Yes (enabled)

CONFIG_MBEDTLS_X509_CRL_PARSE_C

X.509 CRL parsing

Found in: Component config > mbedTLS > Certificates

Support for parsing X.509 Certifificate Revocation Lists.

Default value:

- Yes (enabled)

CONFIG_MBEDTLS_X509_CSR_PARSE_C

X.509 CSR parsing

Found in: Component config > mbedTLS > Certificates

Support for parsing X.509 Certifificate Signing Requests

Default value:

- Yes (enabled)

CONFIG_MBEDTLS_ECP_C

Elliptic Curve Ciphers

Found in: Component config > mbedTLS

Default value:
- Yes (enabled)

Contains:

- *CONFIG_MBEDTLS_ECDH_C*
- *CONFIG_MBEDTLS_ECJPAKE_C*
- *CONFIG_MBEDTLS_ECP_DP_BP256R1_ENABLED*
- *CONFIG_MBEDTLS_ECP_DP_BP384R1_ENABLED*
- *CONFIG_MBEDTLS_ECP_DP_BP512R1_ENABLED*
- *CONFIG_MBEDTLS_ECP_DP_CURVE25519_ENABLED*
- *CONFIG_MBEDTLS_ECP_DP_SECP192K1_ENABLED*
- *CONFIG_MBEDTLS_ECP_DP_SECP192R1_ENABLED*
- *CONFIG_MBEDTLS_ECP_DP_SECP224K1_ENABLED*
- *CONFIG_MBEDTLS_ECP_DP_SECP224R1_ENABLED*
- *CONFIG_MBEDTLS_ECP_DP_SECP256K1_ENABLED*
- *CONFIG_MBEDTLS_ECP_DP_SECP256R1_ENABLED*
- *CONFIG_MBEDTLS_ECP_DP_SECP384R1_ENABLED*
- *CONFIG_MBEDTLS_ECP_DP_SECP521R1_ENABLED*
- *CONFIG_MBEDTLS_ECP_NIST_OPTIM*

CONFIG_MBEDTLS_ECDH_C

Elliptic Curve Diffie-Hellman (ECDH)

Found in: Component config > mbedTLS > CONFIG_MBEDTLS_ECP_C

Enable ECDH. Needed to use ECDHE-xxx TLS ciphersuites.

Default value:
- Yes (enabled)

CONFIG_MBEDTLS_ECDSA_C

Elliptic Curve DSA

Found in: Component config > mbedTLS > CONFIG_MBEDTLS_ECP_C > CONFIG_MBEDTLS_ECDH_C

Enable ECDSA. Needed to use ECDSA-xxx TLS ciphersuites.

Default value:
- Yes (enabled)

CONFIG_MBEDTLS_ECJPAKE_C

Elliptic curve J-PAKE

Found in: Component config > mbedTLS > CONFIG_MBEDTLS_ECP_C

Enable ECJPAKE. Needed to use ECJPAKE-xxx TLS ciphersuites.

Default value:
- No (disabled)

CONFIG_MBEDTLS_ECP_DP_SECP192R1_ENABLED

Enable SECP192R1 curve

Found in: Component config > mbedTLS > CONFIG_MBEDTLS_ECP_C

Enable support for SECP192R1 Elliptic Curve.

Default value:

- Yes (enabled) if (*CONFIG_MBEDTLS_ATCA_HW_ECDSA_SIGN* || *CONFIG_MBEDTLS_ATCA_HW_ECDSA_VERIFY*) && *CONFIG_MBEDTLS_ECP_C*

CONFIG_MBEDTLS_ECP_DP_SECP224R1_ENABLED

Enable SECP224R1 curve

Found in: Component config > mbedTLS > CONFIG_MBEDTLS_ECP_C

Enable support for SECP224R1 Elliptic Curve.

Default value:

- Yes (enabled) if (*CONFIG_MBEDTLS_ATCA_HW_ECDSA_SIGN* || *CONFIG_MBEDTLS_ATCA_HW_ECDSA_VERIFY*) && *CONFIG_MBEDTLS_ECP_C*

CONFIG_MBEDTLS_ECP_DP_SECP256R1_ENABLED

Enable SECP256R1 curve

Found in: Component config > mbedTLS > CONFIG_MBEDTLS_ECP_C

Enable support for SECP256R1 Elliptic Curve.

Default value:

- Yes (enabled)

CONFIG_MBEDTLS_ECP_DP_SECP384R1_ENABLED

Enable SECP384R1 curve

Found in: Component config > mbedTLS > CONFIG_MBEDTLS_ECP_C

Enable support for SECP384R1 Elliptic Curve.

Default value:

- Yes (enabled) if (*CONFIG_MBEDTLS_ATCA_HW_ECDSA_SIGN* || *CONFIG_MBEDTLS_ATCA_HW_ECDSA_VERIFY*) && *CONFIG_MBEDTLS_ECP_C*

CONFIG_MBEDTLS_ECP_DP_SECP521R1_ENABLED

Enable SECP521R1 curve

Found in: Component config > mbedTLS > CONFIG_MBEDTLS_ECP_C

Enable support for SECP521R1 Elliptic Curve.

Default value:

- Yes (enabled) if (*CONFIG_MBEDTLS_ATCA_HW_ECDSA_SIGN* || *CONFIG_MBEDTLS_ATCA_HW_ECDSA_VERIFY*) && *CONFIG_MBEDTLS_ECP_C*

CONFIG_MBEDTLS_ECP_DP_SECP192K1_ENABLED

Enable SECP192K1 curve

Found in: Component config > mbedTLS > CONFIG_MBEDTLS_ECP_C

Enable support for SECP192K1 Elliptic Curve.

Default value:

- Yes (enabled) if (*CONFIG_MBEDTLS_ATCA_HW_ECDSA_SIGN* || *CONFIG_MBEDTLS_ATCA_HW_ECDSA_VERIFY*) && *CONFIG_MBEDTLS_ECP_C*

CONFIG_MBEDTLS_ECP_DP_SECP224K1_ENABLED

Enable SECP224K1 curve

Found in: Component config > mbedTLS > CONFIG_MBEDTLS_ECP_C

Enable support for SECP224K1 Elliptic Curve.

Default value:

- Yes (enabled) if (*CONFIG_MBEDTLS_ATCA_HW_ECDSA_SIGN* || *CONFIG_MBEDTLS_ATCA_HW_ECDSA_VERIFY*) && *CONFIG_MBEDTLS_ECP_C*

CONFIG_MBEDTLS_ECP_DP_SECP256K1_ENABLED

Enable SECP256K1 curve

Found in: Component config > mbedTLS > CONFIG_MBEDTLS_ECP_C

Enable support for SECP256K1 Elliptic Curve.

Default value:

- Yes (enabled) if (*CONFIG_MBEDTLS_ATCA_HW_ECDSA_SIGN* || *CONFIG_MBEDTLS_ATCA_HW_ECDSA_VERIFY*) && *CONFIG_MBEDTLS_ECP_C*

CONFIG_MBEDTLS_ECP_DP_BP256R1_ENABLED

Enable BP256R1 curve

Found in: Component config > mbedTLS > CONFIG_MBEDTLS_ECP_C

support for DP Elliptic Curve.

Default value:

- Yes (enabled) if (*CONFIG_MBEDTLS_ATCA_HW_ECDSA_SIGN* || *CONFIG_MBEDTLS_ATCA_HW_ECDSA_VERIFY*) && *CONFIG_MBEDTLS_ECP_C*

CONFIG_MBEDTLS_ECP_DP_BP384R1_ENABLED

Enable BP384R1 curve

Found in: Component config > mbedTLS > CONFIG_MBEDTLS_ECP_C

support for DP Elliptic Curve.

Default value:

- Yes (enabled) if (*CONFIG_MBEDTLS_ATCA_HW_ECDSA_SIGN* || *CONFIG_MBEDTLS_ATCA_HW_ECDSA_VERIFY*) && *CONFIG_MBEDTLS_ECP_C*

CONFIG_MBEDTLS_ECP_DP_BP512R1_ENABLED

Enable BP512R1 curve

Found in: Component config > mbedTLS > CONFIG_MBEDTLS_ECP_C

support for DP Elliptic Curve.

Default value:

- Yes (enabled) if (*CONFIG_MBEDTLS_ATCA_HW_ECDSA_SIGN* || *CONFIG_MBEDTLS_ATCA_HW_ECDSA_VERIFY*) && *CONFIG_MBEDTLS_ECP_C*

CONFIG_MBEDTLS_ECP_DP_CURVE25519_ENABLED

Enable CURVE25519 curve

Found in: Component config > mbedTLS > CONFIG_MBEDTLS_ECP_C

Enable support for CURVE25519 Elliptic Curve.

Default value:

- Yes (enabled) if (*CONFIG_MBEDTLS_ATCA_HW_ECDSA_SIGN* || *CONFIG_MBEDTLS_ATCA_HW_ECDSA_VERIFY*) && *CONFIG_MBEDTLS_ECP_C*

CONFIG_MBEDTLS_ECP_NIST_OPTIM

NIST ‘modulo p’ optimisations

Found in: Component config > mbedTLS > CONFIG_MBEDTLS_ECP_C

NIST ‘modulo p’ optimisations increase Elliptic Curve operation performance.

Disabling this option saves some code size.

end of Elliptic Curve options

Default value:

- Yes (enabled)

CONFIG_MBEDTLS_POLY1305_C

Poly1305 MAC algorithm

Found in: Component config > mbedTLS

Enable support for Poly1305 MAC algorithm.

Default value:

- No (disabled)

CONFIG_MBEDTLS_CHACHA20_C

Chacha20 stream cipher

Found in: Component config > mbedTLS

Enable support for Chacha20 stream cipher.

Default value:

- No (disabled)

CONFIG_MBEDTLS_CHACHAPOLY_C

ChaCha20-Poly1305 AEAD algorithm

Found in: Component config > mbedTLS > CONFIG_MBEDTLS_CHACHA20_C

Enable support for ChaCha20-Poly1305 AEAD algorithm.

Default value:

- No (disabled) if *CONFIG_MBEDTLS_CHACHA20_C* && *CONFIG_MBEDTLS_POLY1305_C*

CONFIG_MBEDTLS_HKDF_C

HKDF algorithm (RFC 5869)

Found in: Component config > mbedTLS

Enable support for the Hashed Message Authentication Code (HMAC)-based key derivation function (HKDF).

Default value:

- No (disabled)

CONFIG_MBEDTLS_THREADING_C

Enable the threading abstraction layer

Found in: Component config > mbedTLS

If you do intend to use contexts between threads, you will need to enable this layer to prevent race conditions.

Default value:

- No (disabled)

CONFIG_MBEDTLS_THREADING_ALT

Enable threading alternate implementation

Found in: Component config > mbedTLS > CONFIG_MBEDTLS_THREADING_C

Enable threading alt to allow your own alternate threading implementation.

Default value:

- Yes (enabled) if *CONFIG_MBEDTLS_THREADING_C*

CONFIG_MBEDTLS_THREADING_PTHREAD

Enable threading pthread implementation

Found in: Component config > mbedTLS > CONFIG_MBEDTLS_THREADING_C

Enable the pthread wrapper layer for the threading layer.

Default value:

- No (disabled) if *CONFIG_MBEDTLS_THREADING_C*

CONFIG_MBEDTLS_LARGE_KEY_SOFTWARE_MPI

Fallback to software implementation for larger MPI values

Found in: Component config > mbedTLS

Fallback to software implementation for RSA key lengths larger than SOC_RSA_MAX_BIT_LEN. If this is not active then the ESP will be unable to process keys greater than SOC_RSA_MAX_BIT_LEN.

Default value:

- No (disabled)

CONFIG_MBEDTLS_SECURITY_RISKS

Show configurations with potential security risks

Found in: Component config > mbedTLS

Default value:

- No (disabled)

Contains:

- *CONFIG_MBEDTLS_ALLOW_UNSUPPORTED_CRITICAL_EXT*

CONFIG_MBEDTLS_ALLOW_UNSUPPORTED_CRITICAL_EXT

X.509 CRT parsing with unsupported critical extensions

Found in: Component config > mbedTLS > CONFIG_MBEDTLS_SECURITY_RISKS

Allow the X.509 certificate parser to load certificates with unsupported critical extensions

Default value:

- No (disabled) if *CONFIG_MBEDTLS_SECURITY_RISKS*

mDNS Contains:

- *CONFIG_MDNS_MAX_SERVICES*
- *CONFIG_MDNS_SERVICE_ADD_TIMEOUT_MS*
- *CONFIG_MDNS_STRICT_MODE*
- *CONFIG_MDNS_TASK_AFFINITY*
- *CONFIG_MDNS_TASK_PRIORITY*
- *CONFIG_MDNS_TASK_STACK_SIZE*
- *CONFIG_MDNS_TIMER_PERIOD_MS*
- *CONFIG_MDNS_MULTIPLE_INSTANCE*
- *CONFIG_MDNS_NETWORKING_SOCKET*

CONFIG_MDNS_MAX_SERVICES

Max number of services

Found in: Component config > mDNS

Services take up a certain amount of memory, and allowing fewer services to be open at the same time conserves memory. Specify the maximum amount of services here. The valid value is from 1 to 64.

Range:

- from 1 to 64

Default value:

- 10

CONFIG_MDNS_TASK_PRIORITY

mDNS task priority

Found in: Component config > mDNS

Allows setting mDNS task priority. Please do not set the task priority higher than priorities of system tasks. Compile time warning/error would be emitted if the chosen task priority were too high.

Range:

- from 1 to 255

Default value:

- 1

CONFIG_MDNS_TASK_STACK_SIZE

mDNS task stack size

Found in: Component config > mDNS

Allows setting mDNS task stacksize.

Default value:

- 4096

CONFIG_MDNS_TASK_AFFINITY

mDNS task affinity

Found in: Component config > mDNS

Allows setting mDNS tasks affinity, i.e. whether the task is pinned to CPU0, pinned to CPU1, or allowed to run on any CPU.

Available options:
- No affinity (MDNS_TASK_AFFINITY_NO_AFFINITY)
- CPU0 (MDNS_TASK_AFFINITY_CPU0)
- CPU1 (MDNS_TASK_AFFINITY_CPU1)

CONFIG_MDNS_SERVICE_ADD_TIMEOUT_MS

mDNS adding service timeout (ms)

Found in: Component config > mDNS

Configures timeout for adding a new mDNS service. Adding a service fails if could not be completed within this time.

Range:
- from 10 to 30000

Default value:
- 2000

CONFIG_MDNS_STRICT_MODE

mDNS strict mode

Found in: Component config > mDNS

Configures strict mode. Set this to 1 for the mDNS library to strictly follow the RFC6762: Currently the only strict feature: Do not repeat original questions in response packets (defined in RFC6762 sec. 6). Default configuration is 0, i.e. non-strict mode, since some implementations, such as lwIP mdns resolver (used by standard POSIX API like getaddrinfo, gethostbyname) could not correctly resolve advertised names.

Default value:
- No (disabled)

CONFIG_MDNS_TIMER_PERIOD_MS

mDNS timer period (ms)

Found in: Component config > mDNS

Configures period of mDNS timer, which periodically transmits packets and schedules mDNS searches.

Range:
- from 10 to 10000

Default value:
- 100

CONFIG_MDNS_NETWORKING_SOCKET

Use BSD sockets for mdns networking

Found in: Component config > mDNS

Enables optional mdns networking implementation using BSD sockets in UDP multicast mode. This option creates a new thread to serve receiving packets (TODO). This option uses additional N sockets, where N is number of interfaces.

Default value:

- No (disabled)

CONFIG_MDNS_MULTIPLE_INSTANCE

Multiple instances under the same service type

Found in: Component config > mDNS

Enables adding multiple service instances under the same service type.

Default value:

- Yes (enabled)

ESP-MQTT Configurations

Contains:

- *CONFIG_MQTT_CUSTOM_OUTBOX*
- *CONFIG_MQTT_TRANSPORT_SSL*
- *CONFIG_MQTT_TRANSPORT_WEBSOCKET*
- *CONFIG_MQTT_PROTOCOL_311*
- *CONFIG_MQTT_TASK_CORE_SELECTION_ENABLED*
- *CONFIG_MQTT_USE_CUSTOM_CONFIG*
- *CONFIG_MQTT_OUTBOX_EXPIRED_TIMEOUT_MS*
- *CONFIG_MQTT_REPORT_DELETED_MESSAGES*
- *CONFIG_MQTT_SKIP_PUBLISH_IF_DISCONNECTED*
- *CONFIG_MQTT_MSG_ID_INCREMENTAL*

CONFIG_MQTT_PROTOCOL_311

Enable MQTT protocol 3.1.1

Found in: Component config > ESP-MQTT Configurations

If not, this library will use MQTT protocol 3.1

Default value:

- Yes (enabled)

CONFIG_MQTT_TRANSPORT_SSL

Enable MQTT over SSL

Found in: Component config > ESP-MQTT Configurations

Enable MQTT transport over SSL with mbedtls

Default value:

- Yes (enabled)

CONFIG_MQTT_TRANSPORT_WEBSOCKET

Enable MQTT over Websocket

Found in: Component config > ESP-MQTT Configurations

Enable MQTT transport over Websocket.

Default value:

- Yes (enabled)

CONFIG_MQTT_TRANSPORT_WEBSOCKET_SECURE

Enable MQTT over Websocket Secure

Found in: Component config > ESP-MQTT Configurations > CONFIG_MQTT_TRANSPORT_WEBSOCKET

Enable MQTT transport over Websocket Secure.

Default value:

- Yes (enabled)

CONFIG_MQTT_MSG_ID_INCREMENTAL

Use Incremental Message Id

Found in: Component config > ESP-MQTT Configurations

Set this to true for the message id (2.3.1 Packet Identifier) to be generated as an incremental number rather then a random value (used by default)

Default value:

- No (disabled)

CONFIG_MQTT_SKIP_PUBLISH_IF_DISCONNECTED

Skip publish if disconnected

Found in: Component config > ESP-MQTT Configurations

Set this to true to avoid publishing (enqueueing messages) if the client is disconnected. The MQTT client tries to publish all messages by default, even in the disconnected state (where the qos1 and qos2 packets are stored in the internal outbox to be published later) The MQTT_SKIP_PUBLISH_IF_DISCONNECTED option allows applications to override this behaviour and not enqueue publish packets in the disconnected state.

Default value:

- No (disabled)

CONFIG_MQTT_REPORT_DELETED_MESSAGES

Report deleted messages

Found in: Component config > ESP-MQTT Configurations

Set this to true to post events for all messages which were deleted from the outbox before being correctly sent and confirmed.

Default value:

- No (disabled)

CONFIG_MQTT_USE_CUSTOM_CONFIG

MQTT Using custom configurations

Found in: Component config > ESP-MQTT Configurations

Custom MQTT configurations.

Default value:

- No (disabled)

CONFIG_MQTT_TCP_DEFAULT_PORT

Default MQTT over TCP port

Found in: Component config > ESP-MQTT Configurations > CONFIG_MQTT_USE_CUSTOM_CONFIG

Default MQTT over TCP port

Default value:

- 1883 if *CONFIG_MQTT_USE_CUSTOM_CONFIG*

CONFIG_MQTT_SSL_DEFAULT_PORT

Default MQTT over SSL port

Found in: Component config > ESP-MQTT Configurations > CONFIG_MQTT_USE_CUSTOM_CONFIG

Default MQTT over SSL port

Default value:

- 8883 if *CONFIG_MQTT_USE_CUSTOM_CONFIG* && *CONFIG_MQTT_TRANSPORT_SSL*

CONFIG_MQTT_WS_DEFAULT_PORT

Default MQTT over Websocket port

Found in: Component config > ESP-MQTT Configurations > CONFIG_MQTT_USE_CUSTOM_CONFIG

Default MQTT over Websocket port

Default value:

- 80 if *CONFIG_MQTT_USE_CUSTOM_CONFIG* && *CONFIG_MQTT_TRANSPORT_WEBSOCKET*

CONFIG_MQTT_WSS_DEFAULT_PORT

Default MQTT over Websocket Secure port

Found in: Component config > ESP-MQTT Configurations > CONFIG_MQTT_USE_CUSTOM_CONFIG

Default MQTT over Websocket Secure port

Default value:

- 443 if *CONFIG_MQTT_USE_CUSTOM_CONFIG* && *CONFIG_MQTT_TRANSPORT_WEBSOCKET* && *CONFIG_MQTT_TRANSPORT_WEBSOCKET_SECURE*

CONFIG_MQTT_BUFFER_SIZE

Default MQTT Buffer Size

Found in: Component config > ESP-MQTT Configurations > CONFIG_MQTT_USE_CUSTOM_CONFIG

This buffer size using for both transmit and receive

Default value:

- 1024 if *CONFIG_MQTT_USE_CUSTOM_CONFIG*

CONFIG_MQTT_TASK_STACK_SIZE

MQTT task stack size

Found in: Component config > ESP-MQTT Configurations > CONFIG_MQTT_USE_CUSTOM_CONFIG

MQTT task stack size

Default value:

- 6144 if *CONFIG_MQTT_USE_CUSTOM_CONFIG*

CONFIG_MQTT_DISABLE_API_LOCKS

Disable API locks

Found in: Component config > ESP-MQTT Configurations > CONFIG_MQTT_USE_CUSTOM_CONFIG

Default config employs API locks to protect internal structures. It is possible to disable these locks if the user code doesn't access MQTT API from multiple concurrent tasks

Default value:

- No (disabled) if *CONFIG_MQTT_USE_CUSTOM_CONFIG*

CONFIG_MQTT_TASK_PRIORITY

MQTT task priority

Found in: Component config > ESP-MQTT Configurations > CONFIG_MQTT_USE_CUSTOM_CONFIG

MQTT task priority. Higher number denotes higher priority.

Default value:

- 5 if *CONFIG_MQTT_USE_CUSTOM_CONFIG*

CONFIG_MQTT_TASK_CORE_SELECTION_ENABLED

Enable MQTT task core selection

Found in: Component config > ESP-MQTT Configurations

This will enable core selection

Default value:

- "false"

CONFIG_MQTT_TASK_CORE_SELECTION

Core to use ?

Found in: Component config > ESP-MQTT Configurations > CONFIG_MQTT_TASK_CORE_SELECTION_ENABLED

Available options:

- Core 0 (MQTT_USE_CORE_0)
- Core 1 (MQTT_USE_CORE_1)

CONFIG_MQTT_CUSTOM_OUTBOX

Enable custom outbox implementation

Found in: Component config > ESP-MQTT Configurations

Set to true if a specific implementation of message outbox is needed (e.g. persistant outbox in NVM or similar).

Default value:

- No (disabled)

CONFIG_MQTT_OUTBOX_EXPIRED_TIMEOUT_MS

Outbox message expired timeout[ms]

Found in: Component config > ESP-MQTT Configurations

Messages which stays in the outbox longer than this value before being published will be discarded.

Default value:

- 30000 if *CONFIG_MQTT_USE_CUSTOM_CONFIG*

Newlib Contains:

- *CONFIG_NEWLIB_NANO_FORMAT*
- *CONFIG_NEWLIB_STDIN_LINE_ENDING*
- *CONFIG_NEWLIB_STDOUT_LINE_ENDING*

CONFIG_NEWLIB_STDOUT_LINE_ENDING

Line ending for UART output

Found in: Component config > Newlib

This option allows configuring the desired line endings sent to UART when a newline ('n', LF) appears on stdout. Three options are possible:

CRLF: whenever LF is encountered, prepend it with CR

LF: no modification is applied, stdout is sent as is

CR: each occurence of LF is replaced with CR

This option doesn't affect behavior of the UART driver (drivers/uart.h).

Available options:

- CRLF (NEWLIB_STDOUT_LINE_ENDING_CRLF)
- LF (NEWLIB_STDOUT_LINE_ENDING_LF)
- CR (NEWLIB_STDOUT_LINE_ENDING_CR)

CONFIG_NEWLIB_STDIN_LINE_ENDING

Line ending for UART input

Found in: Component config > Newlib

This option allows configuring which input sequence on UART produces a newline ('n', LF) on stdin. Three options are possible:

CRLF: CRLF is converted to LF

LF: no modification is applied, input is sent to stdin as is

CR: each occurence of CR is replaced with LF

This option doesn't affect behavior of the UART driver (drivers/uart.h).

Available options:

- CRLF (NEWLIB_STDIN_LINE_ENDING_CRLF)
- LF (NEWLIB_STDIN_LINE_ENDING_LF)
- CR (NEWLIB_STDIN_LINE_ENDING_CR)

CONFIG_NEWLIB_NANO_FORMAT

Enable ‘nano’ formatting options for printf/scanf family

Found in: Component config > Newlib

ESP32 ROM contains parts of newlib C library, including printf/scanf family of functions. These functions have been compiled with so-called “nano” formatting option. This option doesn’t support 64-bit integer formats and C99 features, such as positional arguments.

For more details about “nano” formatting option, please see newlib readme file, search for ‘–enable-newlib-nano-formatted-io’: https://sourceware.org/newlib/README

If this option is enabled, build system will use functions available in ROM, reducing the application binary size. Functions available in ROM run faster than functions which run from flash. Functions available in ROM can also run when flash instruction cache is disabled.

If you need 64-bit integer formatting support or C99 features, keep this option disabled.

Default value:

- No (disabled)

NVS Contains:

- *CONFIG_NVS_ENCRYPTION*
- *CONFIG_NVS_COMPATIBLE_PRE_V4_3_ENCRYPTION_FLAG*
- *CONFIG_NVS_ASSERT_ERROR_CHECK*

CONFIG_NVS_ENCRYPTION

Enable NVS encryption

Found in: Component config > NVS

This option enables encryption for NVS. When enabled, AES-XTS is used to encrypt the complete NVS data, except the page headers. It requires XTS encryption keys to be stored in an encrypted partition. This means enabling flash encryption is a pre-requisite for this feature.

Default value:

- Yes (enabled) if *CONFIG_SECURE_FLASH_ENC_ENABLED*

CONFIG_NVS_COMPATIBLE_PRE_V4_3_ENCRYPTION_FLAG

NVS partition encrypted flag compatible with ESP-IDF before v4.3

Found in: Component config > NVS

Enabling this will ignore “encrypted” flag for NVS partitions. NVS encryption scheme is different than hardware flash encryption and hence it is not recommended to have “encrypted” flag for NVS partitions. This was not being checked in pre v4.3 IDF. Hence, if you have any devices where this flag is kept enabled in partition table then enabling this config will allow to have same behavior as pre v4.3 IDF.

CONFIG_NVS_ASSERT_ERROR_CHECK

Use assertions for error checking

Found in: Component config > NVS

This option switches error checking type between assertions (y) or return codes (n).

Default value:

- No (disabled)

OpenSSL Contains:

- *CONFIG_OPENSSL_DEBUG*
- *CONFIG_OPENSSL_ERROR_STACK*
- *CONFIG_OPENSSL_LOWLEVEL_DEBUG*
- *CONFIG_OPENSSL_DEBUG_LEVEL*
- *CONFIG_OPENSSL_ASSERT*

CONFIG_OPENSSL_DEBUG

Enable OpenSSL debugging

Found in: Component config > OpenSSL

Enable OpenSSL debugging function.

If the option is enabled, "SSL_DEBUG" works.

Default value:

- No (disabled)

CONFIG_OPENSSL_ERROR_STACK

Enable OpenSSL error structure

Found in: Component config > OpenSSL

Enable OpenSSL Error reporting

Default value:

- Yes (enabled)

CONFIG_OPENSSL_DEBUG_LEVEL

OpenSSL debugging level

Found in: Component config > OpenSSL

OpenSSL debugging level.

Only function whose debugging level is higher than "OPENSSL_DEBUG_LEVEL" works.

For example: If OPENSSL_DEBUG_LEVEL = 2, you use function "SSL_DEBUG(1, "malloc failed")". Because 1 < 2, it will not print.

Range:

- from 0 to 255 if *CONFIG_OPENSSL_DEBUG*

Default value:

- 0 if *CONFIG_OPENSSL_DEBUG*

CONFIG_OPENSSL_LOWLEVEL_DEBUG

Enable OpenSSL low-level module debugging

Found in: Component config > OpenSSL

If the option is enabled, low-level module debugging function of OpenSSL is enabled, e.g. mbedtls internal debugging function.

Default value:

- No (disabled) if *CONFIG_OPENSSL_DEBUG*

CONFIG_OPENSSL_ASSERT

Select OpenSSL assert function

Found in: Component config > OpenSSL

OpenSSL function needs "assert" function to check if input parameters are valid.

If you want to use assert debugging function, "OPENSSL_DEBUG" should be enabled.

Available options:

- Do nothing (OPENSSL_ASSERT_DO_NOTHING)
  Do nothing and "SSL_ASSERT" does not work.
- Check and exit (OPENSSL_ASSERT_EXIT)
  Enable assert exiting, it will check and return error code.
- Show debugging message (OPENSSL_ASSERT_DEBUG)
  Enable assert debugging, it will check and show debugging message.
- Show debugging message and exit (OPENSSL_ASSERT_DEBUG_EXIT)
  Enable assert debugging and exiting, it will check, show debugging message and return error code.
- Show debugging message and block (OPENSSL_ASSERT_DEBUG_BLOCK)
  Enable assert debugging and blocking, it will check, show debugging message and block by "while (1);" .

OpenThread

Contains:

- *CONFIG_OPENTHREAD_ENABLED*

CONFIG_OPENTHREAD_ENABLED

OpenThread

Found in: Component config > OpenThread

Select this option to enable OpenThread and show the submenu with OpenThread configuration choices.

Default value:

- No (disabled)

CONFIG_OPENTHREAD_RADIO_TYPE

Config the Thread radio type

Found in: Component config > OpenThread > CONFIG_OPENTHREAD_ENABLED

Configure how OpenThread connects to the 15.4 radio

Available options:

- Native 15.4 radio (OPENTHREAD_RADIO_NATIVE)
  Select this to use the native 15.4 radio.
- Connect via UART (OPENTHREAD_RADIO_SPINEL_UART)
  Select this to connect to a Radio Co-Processor via UART.

CONFIG_OPENTHREAD_DEVICE_TYPE

Config the Thread device type

Found in: Component config > OpenThread > CONFIG_OPENTHREAD_ENABLED

OpenThread can be configured to different device types (FTD, MTD, Radio)

Available options:

- Full Thread Device (OPENTHREAD_FTD)
  Select this to enable Full Thread Device which can act as router and leader in a Thread network.
- Minimal Thread Device (OPENTHREAD_MTD)
  Select this to enable Minimal Thread Device which can only act as end device in a Thread network. This will reduce the code size of the OpenThread stack.
- Radio Only Device (OPENTHREAD_RADIO)
  Select this to enable Radio Only Device which cannot can only forward 15.4 packets to the host. The OpenThread stack will be run on the host and OpenThread will have minimal footprint on the radio only device.

CONFIG_OPENTHREAD_DIAG

Enable diag

Found in: Component config > OpenThread > CONFIG_OPENTHREAD_ENABLED

Select this option to enable Diag in OpenThread. This will enable diag mode and a series of diag commands in the OpenThread command line. These commands allow users to manipulate low-level features of the storage and 15.4 radio.

Default value:

- Yes (enabled) if *CONFIG_OPENTHREAD_ENABLED*

CONFIG_OPENTHREAD_COMMISSIONER

Enable Commissioner

Found in: Component config > OpenThread > CONFIG_OPENTHREAD_ENABLED

Select this option to enable commissioner in OpenThread. This will enable the device to act as a commissioner in the Thread network. A commissioner checks the pre-shared key from a joining device with the Thread commissioning protocol and shares the network parameter with the joining device upon success.

Default value:

- No (disabled) if *CONFIG_OPENTHREAD_ENABLED*

CONFIG_OPENTHREAD_JOINER

Enable Joiner

Found in: Component config > OpenThread > CONFIG_OPENTHREAD_ENABLED

Select this option to enable Joiner in OpenThread. This allows a device to join the Thread network with a pre-shared key using the Thread commissioning protocol.

Default value:

- No (disabled) if *CONFIG_OPENTHREAD_ENABLED*

CONFIG_OPENTHREAD_SRP_CLIENT

Enable SRP Client

Found in: Component config > OpenThread > CONFIG_OPENTHREAD_ENABLED

Select this option to enable SRP Client in OpenThread. This allows a device to register SRP services to SRP Server.

Default value:

- No (disabled) if *CONFIG_OPENTHREAD_ENABLED*

CONFIG_OPENTHREAD_BORDER_ROUTER

Enable Border Router

Found in: Component config > OpenThread > CONFIG_OPENTHREAD_ENABLED

Select this option to enable border router features in OpenThread.

Default value:
- No (disabled) if *CONFIG_OPENTHREAD_ENABLED*

CONFIG_OPENTHREAD_ESP_LIB_FROM_INTERNAL_SRC

Build esp_openthread libraries from source

Found in: Component config > OpenThread > CONFIG_OPENTHREAD_ENABLED

Override the shipped libopenthread_br.a and libopenthread_port.a, for internal builds.

Default value:
- No (disabled) if *CONFIG_OPENTHREAD_ENABLED*

CONFIG_OPENTHREAD_NUM_MESSAGE_BUFFERS

The number of openthread message buffers

Found in: Component config > OpenThread > CONFIG_OPENTHREAD_ENABLED

Range:
- from 50 to 100 if *CONFIG_OPENTHREAD_ENABLED*

Default value:
- 65 if *CONFIG_OPENTHREAD_ENABLED*

PThreads Contains:

- *CONFIG_PTHREAD_TASK_NAME_DEFAULT*
- *CONFIG_PTHREAD_TASK_CORE_DEFAULT*
- *CONFIG_PTHREAD_TASK_PRIO_DEFAULT*
- *CONFIG_PTHREAD_TASK_STACK_SIZE_DEFAULT*
- *CONFIG_PTHREAD_STACK_MIN*

CONFIG_PTHREAD_TASK_PRIO_DEFAULT

Default task priority

Found in: Component config > PThreads

Priority used to create new tasks with default pthread parameters.

Range:
- from 0 to 255

Default value:
- 5

CONFIG_PTHREAD_TASK_STACK_SIZE_DEFAULT

Default task stack size

Found in: Component config > PThreads

Stack size used to create new tasks with default pthread parameters.

Default value:
- 3072

CONFIG_PTHREAD_STACK_MIN

Minimum allowed pthread stack size

Found in: Component config > PThreads

Minimum allowed pthread stack size set in attributes passed to pthread_create

Default value:

- 768

CONFIG_PTHREAD_TASK_CORE_DEFAULT

Default pthread core affinity

Found in: Component config > PThreads

The default core to which pthreads are pinned.

Available options:

- No affinity (PTHREAD_DEFAULT_CORE_NO_AFFINITY)
- Core 0 (PTHREAD_DEFAULT_CORE_0)
- Core 1 (PTHREAD_DEFAULT_CORE_1)

CONFIG_PTHREAD_TASK_NAME_DEFAULT

Default name of pthreads

Found in: Component config > PThreads

The default name of pthreads.

Default value:

- “pthread”

SPI Flash driver

Contains:

- *Auto-detect flash chips*
- *CONFIG_SPI_FLASH_BYPASS_BLOCK_ERASE*
- *CONFIG_SPI_FLASH_ENABLE_ENCRYPTED_READ_WRITE*
- *CONFIG_SPI_FLASH_ENABLE_COUNTERS*
- *CONFIG_SPI_FLASH_ROM_DRIVER_PATCH*
- *CONFIG_SPI_FLASH_YIELD_DURING_ERASE*
- *CONFIG_SPI_FLASH_CHECK_ERASE_TIMEOUT_DISABLED*
- *CONFIG_SPI_FLASH_WRITE_CHUNK_SIZE*
- *CONFIG_SPI_FLASH_OVERRIDE_CHIP_DRIVER_LIST*
- *CONFIG_SPI_FLASH_SIZE_OVERRIDE*
- *CONFIG_SPI_FLASH_SHARE_SPI1_BUS*
- *CONFIG_SPI_FLASH_USE_LEGACY_IMPL*
- *CONFIG_SPI_FLASH_VERIFY_WRITE*
- *CONFIG_SPI_FLASH_DANGEROUS_WRITE*

CONFIG_SPI_FLASH_VERIFY_WRITE

Verify SPI flash writes

Found in: Component config > SPI Flash driver

If this option is enabled, any time SPI flash is written then the data will be read back and verified. This can catch hardware problems with SPI flash, or flash which was not erased before verification.

Default value:

- No (disabled)

CONFIG_SPI_FLASH_LOG_FAILED_WRITE

Log errors if verification fails

Found in: Component config > SPI Flash driver > CONFIG_SPI_FLASH_VERIFY_WRITE

If this option is enabled, if SPI flash write verification fails then a log error line will be written with the address, expected & actual values. This can be useful when debugging hardware SPI flash problems.

Default value:

- No (disabled) if *CONFIG_SPI_FLASH_VERIFY_WRITE*

CONFIG_SPI_FLASH_WARN_SETTING_ZERO_TO_ONE

Log warning if writing zero bits to ones

Found in: Component config > SPI Flash driver > CONFIG_SPI_FLASH_VERIFY_WRITE

If this option is enabled, any SPI flash write which tries to set zero bits in the flash to ones will log a warning. Such writes will not result in the requested data appearing identically in flash once written, as SPI NOR flash can only set bits to one when an entire sector is erased. After erasing, individual bits can only be written from one to zero.

Note that some software (such as SPIFFS) which is aware of SPI NOR flash may write one bits as an optimisation, relying on the data in flash becoming a bitwise AND of the new data and any existing data. Such software will log spurious warnings if this option is enabled.

Default value:

- No (disabled) if *CONFIG_SPI_FLASH_VERIFY_WRITE*

CONFIG_SPI_FLASH_ENABLE_COUNTERS

Enable operation counters

Found in: Component config > SPI Flash driver

This option enables the following APIs:

- spi_flash_reset_counters
- spi_flash_dump_counters
- spi_flash_get_counters

These APIs may be used to collect performance data for spi_flash APIs and to help understand behaviour of libraries which use SPI flash.

Default value:

- 0

CONFIG_SPI_FLASH_ROM_DRIVER_PATCH

Enable SPI flash ROM driver patched functions

Found in: Component config > SPI Flash driver

Enable this flag to use patched versions of SPI flash ROM driver functions. This option should be enabled, if any one of the following is true: (1) need to write to flash on ESP32-D2WD; (2) main SPI flash is connected to non-default pins; (3) main SPI flash chip is manufactured by ISSI.

Default value:

- Yes (enabled)

CONFIG_SPI_FLASH_DANGEROUS_WRITE

Writing to dangerous flash regions

Found in: Component config > SPI Flash driver

SPI flash APIs can optionally abort or return a failure code if erasing or writing addresses that fall at the beginning of flash (covering the bootloader and partition table) or that overlap the app partition that contains the running app.

It is not recommended to ever write to these regions from an IDF app, and this check prevents logic errors or corrupted firmware memory from damaging these regions.

Note that this feature *does not* check calls to the esp_rom_xxx SPI flash ROM functions. These functions should not be called directly from IDF applications.

Available options:

- Aborts (SPI_FLASH_DANGEROUS_WRITE_ABORTS)
- Fails (SPI_FLASH_DANGEROUS_WRITE_FAILS)
- Allowed (SPI_FLASH_DANGEROUS_WRITE_ALLOWED)

CONFIG_SPI_FLASH_USE_LEGACY_IMPL

Use the legacy implementation before IDF v4.0

Found in: Component config > SPI Flash driver

The implementation of SPI flash has been greatly changed in IDF v4.0. Enable this option to use the legacy implementation.

Default value:

- No (disabled)

CONFIG_SPI_FLASH_SHARE_SPI1_BUS

Support other devices attached to SPI1 bus

Found in: Component config > SPI Flash driver

Each SPI bus needs a lock for arbitration among devices. This allows multiple devices on a same bus, but may reduce the speed of esp_flash driver access to the main flash chip.

If you only need to use esp_flash driver to access the main flash chip, disable this option, and the lock will be bypassed on SPI1 bus. Otherwise if extra devices are needed to attach to SPI1 bus, enable this option.

Default value:

- No (disabled) if *CONFIG_SPI_FLASH_USE_LEGACY_IMPL*

CONFIG_SPI_FLASH_BYPASS_BLOCK_ERASE

Bypass a block erase and always do sector erase

Found in: Component config > SPI Flash driver

Some flash chips can have very high "max" erase times, especially for block erase (32KB or 64KB). This option allows to bypass "block erase" and always do sector erase commands. This will be much slower overall in most cases, but improves latency for other code to run.

Default value:

- No (disabled)

CONFIG_SPI_FLASH_YIELD_DURING_ERASE

Enables yield operation during flash erase

Found in: Component config > SPI Flash driver

This allows to yield the CPUs between erase commands. Prevents starvation of other tasks.

Default value:

- Yes (enabled)

CONFIG_SPI_FLASH_ERASE_YIELD_DURATION_MS

Duration of erasing to yield CPUs (ms)

Found in: Component config > SPI Flash driver > CONFIG_SPI_FLASH_YIELD_DURING_ERASE

If a duration of one erase command is large then it will yield CPUs after finishing a current command.

Default value:

- 20

CONFIG_SPI_FLASH_ERASE_YIELD_TICKS

CPU release time (tick) for an erase operation

Found in: Component config > SPI Flash driver > CONFIG_SPI_FLASH_YIELD_DURING_ERASE

Defines how many ticks will be before returning to continue a erasing.

Default value:

- 1

CONFIG_SPI_FLASH_WRITE_CHUNK_SIZE

Flash write chunk size

Found in: Component config > SPI Flash driver

Flash write is broken down in terms of multiple (smaller) write operations. This configuration options helps to set individual write chunk size, smaller value here ensures that cache (and non-IRAM resident interrupts) remains disabled for shorter duration.

Range:

- from 256 to 8192

Default value:

- 8192

CONFIG_SPI_FLASH_SIZE_OVERRIDE

Override flash size in bootloader header by ESPTOOLPY_FLASHSIZE

Found in: Component config > SPI Flash driver

SPI Flash driver uses the flash size configured in bootloader header by default. Enable this option to override flash size with latest ESPTOOLPY_FLASHSIZE value from the app header if the size in the bootloader header is incorrect.

Default value:

- No (disabled)

CONFIG_SPI_FLASH_CHECK_ERASE_TIMEOUT_DISABLED

Flash timeout checkout disabled

Found in: Component config > SPI Flash driver

This option is helpful if you are using a flash chip whose timeout is quite large or unpredictable.

Default value:

- No (disabled) if *CONFIG_SPI_FLASH_USE_LEGACY_IMPL*

CONFIG_SPI_FLASH_OVERRIDE_CHIP_DRIVER_LIST

Override default chip driver list

Found in: Component config > SPI Flash driver

This option allows the chip driver list to be customized, instead of using the default list provided by ESP-IDF.

When this option is enabled, the default list is no longer compiled or linked. Instead, the *default_registered_chips* structure must be provided by the user.

See example: custom_chip_driver under examples/storage for more details.

Default value:

- No (disabled) if *CONFIG_SPI_FLASH_USE_LEGACY_IMPL*

Auto-detect flash chips Contains:

- *CONFIG_SPI_FLASH_SUPPORT_BOYA_CHIP*
- *CONFIG_SPI_FLASH_SUPPORT_GD_CHIP*
- *CONFIG_SPI_FLASH_SUPPORT_ISSI_CHIP*
- *CONFIG_SPI_FLASH_SUPPORT_MXIC_CHIP*
- *CONFIG_SPI_FLASH_SUPPORT_TH_CHIP*
- *CONFIG_SPI_FLASH_SUPPORT_WINBOND_CHIP*

CONFIG_SPI_FLASH_SUPPORT_ISSI_CHIP

ISSI

Found in: Component config > SPI Flash driver > Auto-detect flash chips

Enable this to support auto detection of ISSI chips if chip vendor not directly given by `chip\_drv` member of the chip struct. This adds support for variant chips, however will extend detecting time.

Default value:

- Yes (enabled)

CONFIG_SPI_FLASH_SUPPORT_MXIC_CHIP

MXIC

Found in: Component config > SPI Flash driver > Auto-detect flash chips

Enable this to support auto detection of MXIC chips if chip vendor not directly given by `chip\_drv` member of the chip struct. This adds support for variant chips, however will extend detecting time.

Default value:

- Yes (enabled)

CONFIG_SPI_FLASH_SUPPORT_GD_CHIP

GigaDevice

Found in: Component config > SPI Flash driver > Auto-detect flash chips

Enable this to support auto detection of GD (GigaDevice) chips if chip vendor not directly given by `chip\_drv` member of the chip struct. If you are using Wrover modules, please don't disable this, otherwise your flash may not work in 4-bit mode.

This adds support for variant chips, however will extend detecting time and image size. Note that the default chip driver supports the GD chips with product ID 60H.

Default value:

- Yes (enabled)

CONFIG_SPI_FLASH_SUPPORT_WINBOND_CHIP

Winbond

Found in: Component config > SPI Flash driver > Auto-detect flash chips

Enable this to support auto detection of Winbond chips if chip vendor not directly given by `chip\_drv` member of the chip struct. This adds support for variant chips, however will extend detecting time.

Default value:

- Yes (enabled)

CONFIG_SPI_FLASH_SUPPORT_BOYA_CHIP

BOYA

Found in: Component config > SPI Flash driver > Auto-detect flash chips

Enable this to support auto detection of BOYA chips if chip vendor not directly given by `chip\_drv` member of the chip struct. This adds support for variant chips, however will extend detecting time.

Default value:

- No (disabled)
- Yes (enabled)

CONFIG_SPI_FLASH_SUPPORT_TH_CHIP

TH

Found in: Component config > SPI Flash driver > Auto-detect flash chips

Enable this to support auto detection of TH chips if chip vendor not directly given by `chip\_drv` member of the chip struct. This adds support for variant chips, however will extend detecting time.

Default value:

- No (disabled)
- Yes (enabled)

CONFIG_SPI_FLASH_ENABLE_ENCRYPTED_READ_WRITE

Enable encrypted partition read/write operations

Found in: Component config > SPI Flash driver

This option enables flash read/write operations to encrypted partition/s. This option is kept enabled irrespective of state of flash encryption feature. However, in case application is not using flash encryption feature and is in need of some additional memory from IRAM region (~1KB) then this config can be disabled.

Default value:

- Yes (enabled)

SPIFFS Configuration Contains:

- *Debug Configuration*
- *CONFIG_SPIFFS_USE_MAGIC*
- *CONFIG_SPIFFS_GC_STATS*
- *CONFIG_SPIFFS_PAGE_CHECK*
- *CONFIG_SPIFFS_FOLLOW_SYMLINKS*
- *CONFIG_SPIFFS_MAX_PARTITIONS*
- *CONFIG_SPIFFS_USE_MTIME*
- *CONFIG_SPIFFS_GC_MAX_RUNS*
- *CONFIG_SPIFFS_OBJ_NAME_LEN*
- *CONFIG_SPIFFS_META_LENGTH*
- *SPIFFS Cache Configuration*
- *CONFIG_SPIFFS_PAGE_SIZE*
- *CONFIG_SPIFFS_MTIME_WIDE_64_BITS*

CONFIG_SPIFFS_MAX_PARTITIONS

Maximum Number of Partitions

Found in: Component config > SPIFFS Configuration

Define maximum number of partitions that can be mounted.

Range:
- from 1 to 10

Default value:
- 3

SPIFFS Cache Configuration Contains:

- *CONFIG_SPIFFS_CACHE*

CONFIG_SPIFFS_CACHE

Enable SPIFFS Cache

Found in: Component config > SPIFFS Configuration > SPIFFS Cache Configuration

Enables/disable memory read caching of nucleus file system operations.

Default value:
- Yes (enabled)

CONFIG_SPIFFS_CACHE_WR

Enable SPIFFS Write Caching

Found in: Component config > SPIFFS Configuration > SPIFFS Cache Configuration > CONFIG_SPIFFS_CACHE

Enables memory write caching for file descriptors in hydrogen.

Default value:
- Yes (enabled)

CONFIG_SPIFFS_CACHE_STATS

Enable SPIFFS Cache Statistics

Found in: Component config > SPIFFS Configuration > SPIFFS Cache Configuration > CONFIG_SPIFFS_CACHE

Enable/disable statistics on caching. Debug/test purpose only.

Default value:
- No (disabled)

CONFIG_SPIFFS_PAGE_CHECK

Enable SPIFFS Page Check

Found in: Component config > SPIFFS Configuration

Always check header of each accessed page to ensure consistent state. If enabled it will increase number of reads from flash, especially if cache is disabled.

Default value:
- Yes (enabled)

CONFIG_SPIFFS_GC_MAX_RUNS

Set Maximum GC Runs

Found in: Component config > SPIFFS Configuration

Define maximum number of GC runs to perform to reach desired free pages.

Range:
- from 1 to 255

Default value:
- 10

CONFIG_SPIFFS_GC_STATS

Enable SPIFFS GC Statistics

Found in: Component config > SPIFFS Configuration

Enable/disable statistics on gc. Debug/test purpose only.

Default value:
- No (disabled)

CONFIG_SPIFFS_PAGE_SIZE

SPIFFS logical page size

Found in: Component config > SPIFFS Configuration

Logical page size of SPIFFS partition, in bytes. Must be multiple of flash page size (which is usually 256 bytes). Larger page sizes reduce overhead when storing large files, and improve filesystem performance when reading large files. Smaller page sizes reduce overhead when storing small (< page size) files.

Range:
- from 256 to 1024

Default value:
- 256

CONFIG_SPIFFS_OBJ_NAME_LEN

Set SPIFFS Maximum Name Length

Found in: Component config > SPIFFS Configuration

Object name maximum length. Note that this length include the zero-termination character, meaning maximum string of characters can at most be SPIFFS_OBJ_NAME_LEN - 1.

SPIFFS_OBJ_NAME_LEN + SPIFFS_META_LENGTH should not exceed SPIFFS_PAGE_SIZE - 64.

Range:
- from 1 to 256

Default value:
- 32

CONFIG_SPIFFS_FOLLOW_SYMLINKS

Enable symbolic links for image creation

Found in: Component config > SPIFFS Configuration

If this option is enabled, symbolic links are taken into account during partition image creation.

Default value:
- No (disabled)

CONFIG_SPIFFS_USE_MAGIC

Enable SPIFFS Filesystem Magic

Found in: Component config > SPIFFS Configuration

Enable this to have an identifiable spiffs filesystem. This will look for a magic in all sectors to determine if this is a valid spiffs system or not at mount time.

Default value:
- Yes (enabled)

CONFIG_SPIFFS_USE_MAGIC_LENGTH

Enable SPIFFS Filesystem Length Magic

Found in: Component config > SPIFFS Configuration > CONFIG_SPIFFS_USE_MAGIC

If this option is enabled, the magic will also be dependent on the length of the filesystem. For example, a filesystem configured and formatted for 4 megabytes will not be accepted for mounting with a configuration defining the filesystem as 2 megabytes.

Default value:
- Yes (enabled)

CONFIG_SPIFFS_META_LENGTH

Size of per-file metadata field

Found in: Component config > SPIFFS Configuration

This option sets the number of extra bytes stored in the file header. These bytes can be used in an application-specific manner. Set this to at least 4 bytes to enable support for saving file modification time.

SPIFFS_OBJ_NAME_LEN + SPIFFS_META_LENGTH should not exceed SPIFFS_PAGE_SIZE - 64.

Default value:

- 4

CONFIG_SPIFFS_USE_MTIME

Save file modification time

Found in: Component config > SPIFFS Configuration

If enabled, then the first 4 bytes of per-file metadata will be used to store file modification time (mtime), accessible through stat/fstat functions. Modification time is updated when the file is opened.

Default value:

- Yes (enabled)

CONFIG_SPIFFS_MTIME_WIDE_64_BITS

The time field occupies 64 bits in the image instead of 32 bits

Found in: Component config > SPIFFS Configuration

If this option is not set, the time field is 32 bits (up to 2106 year), otherwise it is 64 bits and make sure it matches SPIFFS_META_LENGTH. If the chip already has the spiffs image with the time field = 32 bits then this option cannot be applied in this case. Erase it first before using this option. To resolve the Y2K38 problem for the spiffs, use a toolchain with support time_t 64 bits (see SDK_TOOLCHAIN_SUPPORTS_TIME_WIDE_64_BITS).

Default value:

- No (disabled) if *CONFIG_SPIFFS_META_LENGTH* >= 8

Debug Configuration Contains:

- *CONFIG_SPIFFS_DBG*
- *CONFIG_SPIFFS_API_DBG*
- *CONFIG_SPIFFS_CACHE_DBG*
- *CONFIG_SPIFFS_CHECK_DBG*
- *CONFIG_SPIFFS_TEST_VISUALISATION*
- *CONFIG_SPIFFS_GC_DBG*

CONFIG_SPIFFS_DBG

Enable general SPIFFS debug

Found in: Component config > SPIFFS Configuration > Debug Configuration

Enabling this option will print general debug mesages to the console.

Default value:

- No (disabled)

CONFIG_SPIFFS_API_DBG

Enable SPIFFS API debug

Found in: Component config > SPIFFS Configuration > Debug Configuration

Enabling this option will print API debug mesages to the console.

Default value:

- No (disabled)

CONFIG_SPIFFS_GC_DBG

Enable SPIFFS Garbage Cleaner debug

Found in: Component config > SPIFFS Configuration > Debug Configuration

Enabling this option will print GC debug mesages to the console.

Default value:

- No (disabled)

CONFIG_SPIFFS_CACHE_DBG

Enable SPIFFS Cache debug

Found in: Component config > SPIFFS Configuration > Debug Configuration

Enabling this option will print cache debug mesages to the console.

Default value:

- No (disabled)

CONFIG_SPIFFS_CHECK_DBG

Enable SPIFFS Filesystem Check debug

Found in: Component config > SPIFFS Configuration > Debug Configuration

Enabling this option will print Filesystem Check debug mesages to the console.

Default value:

- No (disabled)

CONFIG_SPIFFS_TEST_VISUALISATION

Enable SPIFFS Filesystem Visualization

Found in: Component config > SPIFFS Configuration > Debug Configuration

Enable this option to enable SPIFFS_vis function in the API.

Default value:

- No (disabled)

TCP Transport Contains:

- *Websocket*

Websocket Contains:

- *CONFIG_WS_TRANSPORT*

CONFIG_WS_TRANSPORT

Enable Websocket Transport

Found in: Component config > TCP Transport > Websocket

Enable support for creating websocket transport.

Default value:

- Yes (enabled)

CONFIG_WS_BUFFER_SIZE

Websocket transport buffer size

Found in: Component config > TCP Transport > Websocket > CONFIG_WS_TRANSPORT

Size of the buffer used for constructing the HTTP Upgrade request during connect

Default value:

- 1024

Unity unit testing library Contains:

- *CONFIG_UNITY_ENABLE_COLOR*
- *CONFIG_UNITY_ENABLE_IDF_TEST_RUNNER*
- *CONFIG_UNITY_ENABLE_FIXTURE*
- *CONFIG_UNITY_ENABLE_BACKTRACE_ON_FAIL*
- *CONFIG_UNITY_ENABLE_64BIT*
- *CONFIG_UNITY_ENABLE_DOUBLE*
- *CONFIG_UNITY_ENABLE_FLOAT*

CONFIG_UNITY_ENABLE_FLOAT

Support for float type

Found in: Component config > Unity unit testing library

If not set, assertions on float arguments will not be available.

Default value:

- Yes (enabled)

CONFIG_UNITY_ENABLE_DOUBLE

Support for double type

Found in: Component config > Unity unit testing library

If not set, assertions on double arguments will not be available.

Default value:

- Yes (enabled)

CONFIG_UNITY_ENABLE_64BIT

Support for 64-bit integer types

Found in: Component config > Unity unit testing library

If not set, assertions on 64-bit integer types will always fail. If this feature is enabled, take care not to pass pointers (which are 32 bit) to UNITY_ASSERT_EQUAL, as that will cause pointer-to-int-cast warnings.

Default value:

- No (disabled)

CONFIG_UNITY_ENABLE_COLOR

Colorize test output

Found in: Component config > Unity unit testing library

If set, Unity will colorize test results using console escape sequences.

Default value:

- No (disabled)

CONFIG_UNITY_ENABLE_IDF_TEST_RUNNER

Include ESP-IDF test registration/running helpers

Found in: Component config > Unity unit testing library

If set, then the following features will be available:

- TEST_CASE macro which performs automatic registration of test functions
- Functions to run registered test functions: unity_run_all_tests, unity_run_tests_with_filter, unity_run_single_test_by_name.
- Interactive menu which lists test cases and allows choosing the tests to be run, available via unity_run_menu function.

Disable if a different test registration mechanism is used.

Default value:

- Yes (enabled)

CONFIG_UNITY_ENABLE_FIXTURE

Include Unity test fixture

Found in: Component config > Unity unit testing library

If set, unity_fixture.h header file and associated source files are part of the build. These provide an optional set of macros and functions to implement test groups.

Default value:

- No (disabled)

CONFIG_UNITY_ENABLE_BACKTRACE_ON_FAIL

Print a backtrace when a unit test fails

Found in: Component config > Unity unit testing library

If set, the unity framework will print the backtrace information before jumping back to the test menu. The jumping is usually occurs in assert functions such as TEST_ASSERT, TEST_FAIL etc.

Default value:

- No (disabled)

Virtual file system

Contains:

- *CONFIG_VFS_SUPPORT_IO*

CONFIG_VFS_SUPPORT_IO

Provide basic I/O functions

Found in: Component config > Virtual file system

If enabled, the following functions are provided by the VFS component.

open, close, read, write, pread, pwrite, lseek, fstat, fsync, ioctl, fcntl

Filesystem drivers can then be registered to handle these functions for specific paths.

Disabling this option can save memory when the support for these functions is not required.

Note that the following functions can still be used with socket file descriptors when this option is disabled:

close, read, write, ioctl, fcntl.

Default value:

- Yes (enabled)

CONFIG_VFS_SUPPORT_DIR

Provide directory related functions

Found in: Component config > Virtual file system > CONFIG_VFS_SUPPORT_IO

If enabled, the following functions are provided by the VFS component.

stat, link, unlink, rename, utime, access, truncate, rmdir, mkdir, opendir, closedir, readdir, readdir_r, seekdir, telldir, rewinddir

Filesystem drivers can then be registered to handle these functions for specific paths.

Disabling this option can save memory when the support for these functions is not required.

Default value:

- Yes (enabled)

CONFIG_VFS_SUPPORT_SELECT

Provide select function

Found in: Component config > Virtual file system > CONFIG_VFS_SUPPORT_IO

If enabled, select function is provided by the VFS component, and can be used on peripheral file descriptors (such as UART) and sockets at the same time.

If disabled, the default select implementation will be provided by LWIP for sockets only.

Disabling this option can reduce code size if support for "select" on UART file descriptors is not required.

Default value:

- Yes (enabled) if *CONFIG_VFS_SUPPORT_IO* && *CONFIG_LWIP_USE_ONLY_LWIP_SELECT*

CONFIG_VFS_SUPPRESS_SELECT_DEBUG_OUTPUT

Suppress select() related debug outputs

Found in: Component config > Virtual file system > CONFIG_VFS_SUPPORT_IO > CONFIG_VFS_SUPPORT_SELECT

Select() related functions might produce an unconveniently lot of debug outputs when one sets the default log level to DEBUG or higher. It is possible to suppress these debug outputs by enabling this option.

Default value:

- Yes (enabled)

CONFIG_VFS_SUPPORT_TERMIOS

Provide termios.h functions

Found in: Component config > Virtual file system > CONFIG_VFS_SUPPORT_IO

Disabling this option can save memory when the support for termios.h is not required.

Default value:

- Yes (enabled)

Host File System I/O (Semihosting) Contains:

- *CONFIG_VFS_SEMIHOSTFS_MAX_MOUNT_POINTS*

CONFIG_VFS_SEMIHOSTFS_MAX_MOUNT_POINTS

Host FS: Maximum number of the host filesystem mount points

Found in: Component config > Virtual file system > CONFIG_VFS_SUPPORT_IO > Host File System I/O (Semihosting)

Define maximum number of host filesystem mount points.

Default value:

- 1

Wear Levelling Contains:

- *CONFIG_WL_SECTOR_MODE*
- *CONFIG_WL_SECTOR_SIZE*

CONFIG_WL_SECTOR_SIZE

Wear Levelling library sector size

Found in: Component config > Wear Levelling

Sector size used by wear levelling library. You can set default sector size or size that will fit to the flash device sector size.

With sector size set to 4096 bytes, wear levelling library is more efficient. However if FAT filesystem is used on top of wear levelling library, it will need more temporary storage: 4096 bytes for each mounted filesystem and 4096 bytes for each opened file.

With sector size set to 512 bytes, wear levelling library will perform more operations with flash memory, but less RAM will be used by FAT filesystem library (512 bytes for the filesystem and 512 bytes for each file opened).

Available options:

- 512 (WL_SECTOR_SIZE_512)
- 4096 (WL_SECTOR_SIZE_4096)

CONFIG_WL_SECTOR_MODE

Sector store mode

Found in: Component config > Wear Levelling

Specify the mode to store data into flash:

- In Performance mode a data will be stored to the RAM and then stored back to the flash. Compared to the Safety mode, this operation is faster, but if power will be lost when erase sector operation is in progress, then the data from complete flash device sector will be lost.
- In Safety mode data from complete flash device sector will be read from flash, modified, and then stored back to flash. Compared to the Performance mode, this operation is slower, but if power is lost during erase sector operation, then the data from full flash device sector will not be lost.

Available options:

- Perfomance (WL_SECTOR_MODE_PERF)
- Safety (WL_SECTOR_MODE_SAFE)

Wi-Fi Provisioning Manager Contains:

- *CONFIG_WIFI_PROV_BLE_BONDING*
- *CONFIG_WIFI_PROV_BLE_SEC_CONN*
- *CONFIG_WIFI_PROV_BLE_FORCE_ENCRYPTION*
- *CONFIG_WIFI_PROV_KEEP_BLE_ON_AFTER_PROV*
- *CONFIG_WIFI_PROV_SCAN_MAX_ENTRIES*

- *CONFIG_WIFI_PROV_AUTOSTOP_TIMEOUT*

CONFIG_WIFI_PROV_SCAN_MAX_ENTRIES

Max Wi-Fi Scan Result Entries

Found in: Component config > Wi-Fi Provisioning Manager

This sets the maximum number of entries of Wi-Fi scan results that will be kept by the provisioning manager

Range:
- from 1 to 255

Default value:
- 16

CONFIG_WIFI_PROV_AUTOSTOP_TIMEOUT

Provisioning auto-stop timeout

Found in: Component config > Wi-Fi Provisioning Manager

Time (in seconds) after which the Wi-Fi provisioning manager will auto-stop after connecting to a Wi-Fi network successfully.

Range:
- from 5 to 600

Default value:
- 30

CONFIG_WIFI_PROV_BLE_BONDING

Enable BLE bonding

Found in: Component config > Wi-Fi Provisioning Manager

This option is applicable only when provisioning transport is BLE.

Default value:
- Yes (enabled) if *CONFIG_BT_ENABLED*

CONFIG_WIFI_PROV_BLE_SEC_CONN

Enable BLE Secure connection flag

Found in: Component config > Wi-Fi Provisioning Manager

Used to enable Secure connection support when provisioning transport is BLE.

Default value:
- Yes (enabled) if BT_NIMBLE_ENABLED

CONFIG_WIFI_PROV_BLE_FORCE_ENCRYPTION

Force Link Encryption during characteristic Read / Write

Found in: Component config > Wi-Fi Provisioning Manager

Used to enforce link encryption when attempting to read / write characteristic

Default value:
- Yes (enabled)

CONFIG_WIFI_PROV_KEEP_BLE_ON_AFTER_PROV

Keep BT on after provisioning is done

Found in: Component config > Wi-Fi Provisioning Manager

CONFIG_WIFI_PROV_DISCONNECT_AFTER_PROV

Terminate connection after provisioning is done

Found in: Component config > Wi-Fi Provisioning Manager > CONFIG_WIFI_PROV_KEEP_BLE_ON_AFTER_PROV

Default value:

- Yes (enabled) if *CONFIG_WIFI_PROV_KEEP_BLE_ON_AFTER_PROV*

Supplicant Contains:

- *CONFIG_WPA_TESTING_OPTIONS*
- *CONFIG_WPA_11KV_SUPPORT*
- *CONFIG_WPA_DPP_SUPPORT*
- *CONFIG_WPA_MBO_SUPPORT*
- *CONFIG_WPA_SUITE_B_192*
- *CONFIG_WPA_WAPI_PSK*
- *CONFIG_WPA_DEBUG_PRINT*
- *CONFIG_WPA_WPS_STRICT*
- *CONFIG_WPA_MBEDTLS_CRYPTO*

CONFIG_WPA_MBEDTLS_CRYPTO

Use MbedTLS crypto APIs

Found in: Component config > Supplicant

Select this option to use MbedTLS crypto APIs which utilize hardware acceleration.

Default value:

- Yes (enabled)

CONFIG_WPA_WAPI_PSK

Enable WAPI PSK support

Found in: Component config > Supplicant

Select this option to enable WAPI-PSK which is a Chinese National Standard Encryption for Wireless LANs (GB 15629.11-2003).

Default value:

- No (disabled)

CONFIG_WPA_SUITE_B_192

Enable NSA suite B support with 192 bit key

Found in: Component config > Supplicant

Select this option to enable 192 bit NSA suite-B. This is necessary to support WPA3 192 bit security.

Default value:

- No (disabled)

CONFIG_WPA_DEBUG_PRINT

Print debug messages from WPA Supplicant

Found in: Component config > Supplicant

Select this option to print logging information from WPA supplicant, this includes handshake information and key hex dumps depending on the project logging level.

Enabling this could increase the build size ~60kb depending on the project logging level.

Default value:

- No (disabled)

CONFIG_WPA_TESTING_OPTIONS

Add DPP testing code

Found in: Component config > Supplicant

Select this to enable unity test for DPP.

Default value:

- No (disabled)

CONFIG_WPA_WPS_STRICT

Strictly validate all WPS attributes

Found in: Component config > Supplicant

Select this option to enable validate each WPS attribute rigorously. Disabling this add the workaorunds with various APs. Enabling this may cause inter operability issues with some APs.

Default value:

- No (disabled)

CONFIG_WPA_11KV_SUPPORT

Enable 802.11k, 802.11v APIs handling

Found in: Component config > Supplicant

Select this option to enable 802.11k 802.11v APIs(RRM and BTM support). Only APIs which are helpful for network assisted roaming are supported for now. Enable this option with BTM and RRM enabled in sta config to make device ready for network assisted roaming. BTM: BSS transition management enables an AP to request a station to transition to a specific AP, or to indicate to a station a set of preferred APs. RRM: Radio measurements enable STAs to understand the radio environment, it enables STAs to observe and gather data on radio link performance and on the radio environment. Current implementation adds beacon report, link measurement, neighbor report.

Default value:

- No (disabled)

CONFIG_WPA_SCAN_CACHE

Keep scan results in cache

Found in: Component config > Supplicant > CONFIG_WPA_11KV_SUPPORT

Keep scan results in cache, if not enabled, those will be flushed immediately.

Default value:

- No (disabled) if *CONFIG_WPA_11KV_SUPPORT*

CONFIG_WPA_MBO_SUPPORT

Enable MBO support

Found in: Component config > Supplicant

Select this option to enable WiFi Multiband operation certification support.

Default value:

- No (disabled)

CONFIG_WPA_DPP_SUPPORT

Enable DPP support

Found in: Component config > Supplicant

Select this option to enable WiFi Easy Connect Support.

Default value:

- No (disabled)

Compatibility options

Contains:

- *CONFIG_LEGACY_INCLUDE_COMMON_HEADERS*

CONFIG_LEGACY_INCLUDE_COMMON_HEADERS

Include headers across components as before IDF v4.0

Found in: Compatibility options

Soc, esp32, and driver components, the most common components. Some header of these components are included implicitly by headers of other components before IDF v4.0. It's not required for high-level components, but still included through long header chain everywhere.

This is harmful to the modularity. So it's changed in IDF v4.0.

You can still include these headers in a legacy way until it is totally deprecated by enable this option.

Default value:

- No (disabled)

Deprecated options and their replacements

- CONFIG_A2DP_ENABLE (*CONFIG_BT_A2DP_ENABLE*)
- **CONFIG_A2D_INITIAL_TRACE_LEVEL (*CONFIG_BT_LOG_A2D_TRACE_LEVEL*)**
  - CONFIG_A2D_TRACE_LEVEL_NONE
  - CONFIG_A2D_TRACE_LEVEL_ERROR
  - CONFIG_A2D_TRACE_LEVEL_WARNING
  - CONFIG_A2D_TRACE_LEVEL_API
  - CONFIG_A2D_TRACE_LEVEL_EVENT
  - CONFIG_A2D_TRACE_LEVEL_DEBUG
  - CONFIG_A2D_TRACE_LEVEL_VERBOSE
- CONFIG_ADC2_DISABLE_DAC (*CONFIG_ADC_DISABLE_DAC*)
- **CONFIG_APPL_INITIAL_TRACE_LEVEL (*CONFIG_BT_LOG_APPL_TRACE_LEVEL*)**
  - CONFIG_APPL_TRACE_LEVEL_NONE
  - CONFIG_APPL_TRACE_LEVEL_ERROR
  - CONFIG_APPL_TRACE_LEVEL_WARNING
  - CONFIG_APPL_TRACE_LEVEL_API
  - CONFIG_APPL_TRACE_LEVEL_EVENT

  - CONFIG_APPL_TRACE_LEVEL_DEBUG
  - CONFIG_APPL_TRACE_LEVEL_VERBOSE
- CONFIG_APP_ANTI_ROLLBACK (*CONFIG_BOOTLOADER_APP_ANTI_ROLLBACK*)
- CONFIG_APP_ROLLBACK_ENABLE (*CONFIG_BOOTLOADER_APP_ROLLBACK_ENABLE*)
- CONFIG_APP_SECURE_VERSION (*CONFIG_BOOTLOADER_APP_SECURE_VERSION*)
- CONFIG_APP_SECURE_VERSION_SIZE_EFUSE_FIELD (*CONFIG_BOOTLOADER_APP_SEC_VER_SIZE_EFUSE_FIELD*)
- **CONFIG_AVCT_INITIAL_TRACE_LEVEL** (***CONFIG_BT_LOG_AVCT_TRACE_LEVEL***)
  - CONFIG_AVCT_TRACE_LEVEL_NONE
  - CONFIG_AVCT_TRACE_LEVEL_ERROR
  - CONFIG_AVCT_TRACE_LEVEL_WARNING
  - CONFIG_AVCT_TRACE_LEVEL_API
  - CONFIG_AVCT_TRACE_LEVEL_EVENT
  - CONFIG_AVCT_TRACE_LEVEL_DEBUG
  - CONFIG_AVCT_TRACE_LEVEL_VERBOSE
- **CONFIG_AVDT_INITIAL_TRACE_LEVEL** (***CONFIG_BT_LOG_AVDT_TRACE_LEVEL***)
  - CONFIG_AVDT_TRACE_LEVEL_NONE
  - CONFIG_AVDT_TRACE_LEVEL_ERROR
  - CONFIG_AVDT_TRACE_LEVEL_WARNING
  - CONFIG_AVDT_TRACE_LEVEL_API
  - CONFIG_AVDT_TRACE_LEVEL_EVENT
  - CONFIG_AVDT_TRACE_LEVEL_DEBUG
  - CONFIG_AVDT_TRACE_LEVEL_VERBOSE
- **CONFIG_AVRC_INITIAL_TRACE_LEVEL** (***CONFIG_BT_LOG_AVRC_TRACE_LEVEL***)
  - CONFIG_AVRC_TRACE_LEVEL_NONE
  - CONFIG_AVRC_TRACE_LEVEL_ERROR
  - CONFIG_AVRC_TRACE_LEVEL_WARNING
  - CONFIG_AVRC_TRACE_LEVEL_API
  - CONFIG_AVRC_TRACE_LEVEL_EVENT
  - CONFIG_AVRC_TRACE_LEVEL_DEBUG
  - CONFIG_AVRC_TRACE_LEVEL_VERBOSE
- CONFIG_BLE_ACTIVE_SCAN_REPORT_ADV_SCAN_RSP_INDIVIDUALLY (*CONFIG_BT_BLE_ACT_SCAN_REP_ADV_SCAN*)
- CONFIG_BLE_ADV_REPORT_DISCARD_THRSHOLD (*CONFIG_BTDM_BLE_ADV_REPORT_DISCARD_THRSHOLD*)
- CONFIG_BLE_ADV_REPORT_FLOW_CONTROL_NUM (*CONFIG_BTDM_BLE_ADV_REPORT_FLOW_CTRL_NUM*)
- CONFIG_BLE_ADV_REPORT_FLOW_CONTROL_SUPPORTED (*CONFIG_BTDM_BLE_ADV_REPORT_FLOW_CTRL_SUPP*)
- CONFIG_BLE_ESTABLISH_LINK_CONNECTION_TIMEOUT (*CONFIG_BT_BLE_ESTAB_LINK_CONN_TOUT*)
- CONFIG_BLE_HOST_QUEUE_CONGESTION_CHECK (*CONFIG_BT_BLE_HOST_QUEUE_CONG_CHECK*)
- CONFIG_BLE_MESH_GATT_PROXY (*CONFIG_BLE_MESH_GATT_PROXY_SERVER*)
- CONFIG_BLE_MESH_SCAN_DUPLICATE_EN (*CONFIG_BTDM_BLE_MESH_SCAN_DUPL_EN*)
- CONFIG_BLE_SCAN_DUPLICATE (*CONFIG_BTDM_BLE_SCAN_DUPL*)
- CONFIG_BLE_SMP_ENABLE (*CONFIG_BT_BLE_SMP_ENABLE*)
- CONFIG_BLUEDROID_MEM_DEBUG (*CONFIG_BT_BLUEDROID_MEM_DEBUG*)
- **CONFIG_BLUEDROID_PINNED_TO_CORE_CHOICE** (***CONFIG_BT_BLUEDROID_PINNED_TO_CORE_CHOICE***)
  - CONFIG_BLUEDROID_PINNED_TO_CORE_0
  - CONFIG_BLUEDROID_PINNED_TO_CORE_1
- **CONFIG_BLUFI_INITIAL_TRACE_LEVEL** (***CONFIG_BT_LOG_BLUFI_TRACE_LEVEL***)
  - CONFIG_BLUFI_TRACE_LEVEL_NONE
  - CONFIG_BLUFI_TRACE_LEVEL_ERROR
  - CONFIG_BLUFI_TRACE_LEVEL_WARNING
  - CONFIG_BLUFI_TRACE_LEVEL_API
  - CONFIG_BLUFI_TRACE_LEVEL_EVENT
  - CONFIG_BLUFI_TRACE_LEVEL_DEBUG
  - CONFIG_BLUFI_TRACE_LEVEL_VERBOSE
- CONFIG_BNEP_INITIAL_TRACE_LEVEL (*CONFIG_BT_LOG_BNEP_TRACE_LEVEL*)
- CONFIG_BROWNOUT_DET (*CONFIG_ESP32_BROWNOUT_DET*)

- **CONFIG_BROWNOUT_DET_LVL_SEL** (*CONFIG_ESP32_BROWNOUT_DET_LVL_SEL*)
  - CONFIG_BROWNOUT_DET_LVL_SEL_0
  - CONFIG_BROWNOUT_DET_LVL_SEL_1
  - CONFIG_BROWNOUT_DET_LVL_SEL_2
  - CONFIG_BROWNOUT_DET_LVL_SEL_3
  - CONFIG_BROWNOUT_DET_LVL_SEL_4
  - CONFIG_BROWNOUT_DET_LVL_SEL_5
  - CONFIG_BROWNOUT_DET_LVL_SEL_6
  - CONFIG_BROWNOUT_DET_LVL_SEL_7
- **CONFIG_BTC_INITIAL_TRACE_LEVEL** (*CONFIG_BT_LOG_BTC_TRACE_LEVEL*)
  - CONFIG_BTC_TRACE_LEVEL_NONE
  - CONFIG_BTC_TRACE_LEVEL_ERROR
  - CONFIG_BTC_TRACE_LEVEL_WARNING
  - CONFIG_BTC_TRACE_LEVEL_API
  - CONFIG_BTC_TRACE_LEVEL_EVENT
  - CONFIG_BTC_TRACE_LEVEL_DEBUG
  - CONFIG_BTC_TRACE_LEVEL_VERBOSE
- CONFIG_BTC_TASK_STACK_SIZE (*CONFIG_BT_BTC_TASK_STACK_SIZE*)
- CONFIG_BTDM_CONTROLLER_BLE_MAX_CONN (*CONFIG_BTDM_CTRL_BLE_MAX_CONN*)
- CONFIG_BTDM_CONTROLLER_BR_EDR_MAX_ACL_CONN (*CONFIG_BTDM_CTRL_BR_EDR_MAX_ACL_CONN*)
- CONFIG_BTDM_CONTROLLER_BR_EDR_MAX_SYNC_CONN (*CONFIG_BTDM_CTRL_BR_EDR_MAX_SYNC_CONN*)
- CONFIG_BTDM_CONTROLLER_FULL_SCAN_SUPPORTED (*CONFIG_BTDM_CTRL_FULL_SCAN_SUPPORTED*)
- **CONFIG_BTDM_CONTROLLER_HCI_MODE_CHOICE** (*CONFIG_BTDM_CTRL_HCI_MODE_CHOICE*)
  - CONFIG_BTDM_CONTROLLER_HCI_MODE_VHCI
  - CONFIG_BTDM_CONTROLLER_HCI_MODE_UART_H4
- **CONFIG_BTDM_CONTROLLER_MODE** (*CONFIG_BTDM_CTRL_MODE*)
  - CONFIG_BTDM_CONTROLLER_MODE_BLE_ONLY
  - CONFIG_BTDM_CONTROLLER_MODE_BR_EDR_ONLY
  - CONFIG_BTDM_CONTROLLER_MODE_BTDM
- CONFIG_BTDM_CONTROLLER_MODEM_SLEEP (*CONFIG_BTDM_CTRL_MODEM_SLEEP*)
- CONFIG_BTDM_CONTROLLER_PINNED_TO_CORE_CHOICE (*CONFIG_BTDM_CTRL_PINNED_TO_CORE_CHOICE*)
- **CONFIG_BTH_LOG_SDP_INITIAL_TRACE_LEVEL** (*CONFIG_BT_LOG_SDP_TRACE_LEVEL*)
  - CONFIG_SDP_TRACE_LEVEL_NONE
  - CONFIG_SDP_TRACE_LEVEL_ERROR
  - CONFIG_SDP_TRACE_LEVEL_WARNING
  - CONFIG_SDP_TRACE_LEVEL_API
  - CONFIG_SDP_TRACE_LEVEL_EVENT
  - CONFIG_SDP_TRACE_LEVEL_DEBUG
  - CONFIG_SDP_TRACE_LEVEL_VERBOSE
- **CONFIG_BTIF_INITIAL_TRACE_LEVEL** (*CONFIG_BT_LOG_BTIF_TRACE_LEVEL*)
  - CONFIG_BTIF_TRACE_LEVEL_NONE
  - CONFIG_BTIF_TRACE_LEVEL_ERROR
  - CONFIG_BTIF_TRACE_LEVEL_WARNING
  - CONFIG_BTIF_TRACE_LEVEL_API
  - CONFIG_BTIF_TRACE_LEVEL_EVENT
  - CONFIG_BTIF_TRACE_LEVEL_DEBUG
  - CONFIG_BTIF_TRACE_LEVEL_VERBOSE
- **CONFIG_BTM_INITIAL_TRACE_LEVEL** (*CONFIG_BT_LOG_BTM_TRACE_LEVEL*)
  - CONFIG_BTM_TRACE_LEVEL_NONE
  - CONFIG_BTM_TRACE_LEVEL_ERROR
  - CONFIG_BTM_TRACE_LEVEL_WARNING
  - CONFIG_BTM_TRACE_LEVEL_API
  - CONFIG_BTM_TRACE_LEVEL_EVENT

  - CONFIG_BTM_TRACE_LEVEL_DEBUG
  - CONFIG_BTM_TRACE_LEVEL_VERBOSE
- CONFIG_BTU_TASK_STACK_SIZE (*CONFIG_BT_BTU_TASK_STACK_SIZE*)
- CONFIG_CLASSIC_BT_ENABLED (*CONFIG_BT_CLASSIC_ENABLED*)
- CONFIG_COMPATIBLE_PRE_V2_1_BOOTLOADERS (*CONFIG_ESP32_COMPATIBLE_PRE_V2_1_BOOTLOADERS*)
- **CONFIG_CONSOLE_UART (*CONFIG_ESP_CONSOLE_UART*)**
  - CONFIG_CONSOLE_UART_DEFAULT
  - CONFIG_CONSOLE_UART_CUSTOM
  - CONFIG_ESP_CONSOLE_UART_NONE
- CONFIG_CONSOLE_UART_BAUDRATE (*CONFIG_ESP_CONSOLE_UART_BAUDRATE*)
- **CONFIG_CONSOLE_UART_NUM (*CONFIG_ESP_CONSOLE_UART_NUM*)**
  - CONFIG_CONSOLE_UART_CUSTOM_NUM_0
  - CONFIG_CONSOLE_UART_CUSTOM_NUM_1
- CONFIG_CONSOLE_UART_RX_GPIO (*CONFIG_ESP_CONSOLE_UART_RX_GPIO*)
- CONFIG_CONSOLE_UART_TX_GPIO (*CONFIG_ESP_CONSOLE_UART_TX_GPIO*)
- CONFIG_CXX_EXCEPTIONS (*CONFIG_COMPILER_CXX_EXCEPTIONS*)
- CONFIG_CXX_EXCEPTIONS_EMG_POOL_SIZE (*CONFIG_COMPILER_CXX_EXCEPTIONS_EMG_POOL_SIZE*)
- CONFIG_DISABLE_BASIC_ROM_CONSOLE (*CONFIG_ESP32_DISABLE_BASIC_ROM_CONSOLE*)
- CONFIG_DISABLE_GCC8_WARNINGS (*CONFIG_COMPILER_DISABLE_GCC8_WARNINGS*)
- CONFIG_DUPLICATE_SCAN_CACHE_SIZE (*CONFIG_BTDM_SCAN_DUPL_CACHE_SIZE*)
- CONFIG_EFUSE_SECURE_VERSION_EMULATE (*CONFIG_BOOTLOADER_EFUSE_SECURE_VERSION_EMULATE*)
- CONFIG_ENABLE_STATIC_TASK_CLEAN_UP_HOOK (*CONFIG_FREERTOS_ENABLE_STATIC_TASK_CLEAN_UP*)
- CONFIG_ESP32C3_LIGHTSLEEP_GPIO_RESET_WORKAROUND (*CONFIG_ESP_SLEEP_GPIO_RESET_WORKAROUND*)
- CONFIG_ESP32C3_MEMPROT_FEATURE (*CONFIG_ESP_SYSTEM_MEMPROT_FEATURE*)
- CONFIG_ESP32C3_MEMPROT_FEATURE_LOCK (*CONFIG_ESP_SYSTEM_MEMPROT_FEATURE_LOCK*)
- CONFIG_ESP32H2_MEMPROT_FEATURE (*CONFIG_ESP_SYSTEM_MEMPROT_FEATURE*)
- CONFIG_ESP32H2_MEMPROT_FEATURE_LOCK (*CONFIG_ESP_SYSTEM_MEMPROT_FEATURE_LOCK*)
- CONFIG_ESP32S2_ALLOW_RTC_FAST_MEM_AS_HEAP (*CONFIG_ESP_SYSTEM_ALLOW_RTC_FAST_MEM_AS_HEA*
- CONFIG_ESP32S2_MEMPROT_FEATURE (*CONFIG_ESP_SYSTEM_MEMPROT_FEATURE*)
- CONFIG_ESP32S2_MEMPROT_FEATURE_LOCK (*CONFIG_ESP_SYSTEM_MEMPROT_FEATURE_LOCK*)
- **CONFIG_ESP32S2_PANIC (*CONFIG_ESP_SYSTEM_PANIC*)**
  - CONFIG_ESP32S2_PANIC_PRINT_HALT
  - CONFIG_ESP32S2_PANIC_PRINT_REBOOT
  - CONFIG_ESP32S2_PANIC_SILENT_REBOOT
  - CONFIG_ESP32S2_PANIC_GDBSTUB
- CONFIG_ESP32_ALLOW_RTC_FAST_MEM_AS_HEAP (*CONFIG_ESP_SYSTEM_ALLOW_RTC_FAST_MEM_AS_HEAP*)
- **CONFIG_ESP32_APPTRACE_DESTINATION (*CONFIG_APPTRACE_DESTINATION*)**
  - CONFIG_ESP32_APPTRACE_DEST_TRAX
  - CONFIG_ESP32_APPTRACE_DEST_NONE
- CONFIG_ESP32_APPTRACE_ONPANIC_HOST_FLUSH_TMO (*CONFIG_APPTRACE_ONPANIC_HOST_FLUSH_TMO*)
- CONFIG_ESP32_APPTRACE_PENDING_DATA_SIZE_MAX (*CONFIG_APPTRACE_PENDING_DATA_SIZE_MAX*)
- CONFIG_ESP32_APPTRACE_POSTMORTEM_FLUSH_TRAX_THRESH (*CONFIG_APPTRACE_POSTMORTEM_FLUSH_THRESH*)
- **CONFIG_ESP32_CORE_DUMP_DECODE (*CONFIG_ESP_COREDUMP_DECODE*)**
  - CONFIG_ESP32_CORE_DUMP_DECODE_INFO
  - CONFIG_ESP32_CORE_DUMP_DECODE_DISABLE
- CONFIG_ESP32_CORE_DUMP_MAX_TASKS_NUM (*CONFIG_ESP_COREDUMP_MAX_TASKS_NUM*)
- CONFIG_ESP32_CORE_DUMP_UART_DELAY (*CONFIG_ESP_COREDUMP_UART_DELAY*)
- CONFIG_ESP32_DEBUG_STUBS_ENABLE (*CONFIG_ESP_DEBUG_STUBS_ENABLE*)
- CONFIG_ESP32_GCOV_ENABLE (*CONFIG_APPTRACE_GCOV_ENABLE*)
- **CONFIG_ESP32_PANIC (*CONFIG_ESP_SYSTEM_PANIC*)**
  - CONFIG_ESP32S2_PANIC_PRINT_HALT
  - CONFIG_ESP32S2_PANIC_PRINT_REBOOT
  - CONFIG_ESP32S2_PANIC_SILENT_REBOOT
  - CONFIG_ESP32S2_PANIC_GDBSTUB
- CONFIG_ESP32_PHY_CALIBRATION_AND_DATA_STORAGE (*CON-*

FIG_ESP_PHY_CALIBRATION_AND_DATA_STORAGE)
- CONFIG_ESP32_PHY_DEFAULT_INIT_IF_INVALID (*CONFIG_ESP_PHY_DEFAULT_INIT_IF_INVALID*)
- CONFIG_ESP32_PHY_INIT_DATA_ERROR (*CONFIG_ESP_PHY_INIT_DATA_ERROR*)
- CONFIG_ESP32_PHY_INIT_DATA_IN_PARTITION (*CONFIG_ESP_PHY_INIT_DATA_IN_PARTITION*)
- CONFIG_ESP32_PHY_MAX_WIFI_TX_POWER (*CONFIG_ESP_PHY_MAX_WIFI_TX_POWER*)
- CONFIG_ESP32_PTHREAD_STACK_MIN (*CONFIG_PTHREAD_STACK_MIN*)
- **CONFIG_ESP32_PTHREAD_TASK_CORE_DEFAULT (*CONFIG_PTHREAD_TASK_CORE_DEFAULT*)**
  - CONFIG_ESP32_DEFAULT_PTHREAD_CORE_NO_AFFINITY
  - CONFIG_ESP32_DEFAULT_PTHREAD_CORE_0
  - CONFIG_ESP32_DEFAULT_PTHREAD_CORE_1
- CONFIG_ESP32_PTHREAD_TASK_NAME_DEFAULT (*CONFIG_PTHREAD_TASK_NAME_DEFAULT*)
- CONFIG_ESP32_PTHREAD_TASK_PRIO_DEFAULT (*CONFIG_PTHREAD_TASK_PRIO_DEFAULT*)
- CONFIG_ESP32_PTHREAD_TASK_STACK_SIZE_DEFAULT (*CONFIG_PTHREAD_TASK_STACK_SIZE_DEFAULT*)
- CONFIG_ESP32_REDUCE_PHY_TX_POWER (*CONFIG_ESP_PHY_REDUCE_TX_POWER*)
- **CONFIG_ESP32_RTC_CLOCK_SOURCE (*CONFIG_ESP32_RTC_CLK_SRC*)**
  - CONFIG_ESP32_RTC_CLOCK_SOURCE_INTERNAL_RC
  - CONFIG_ESP32_RTC_CLOCK_SOURCE_EXTERNAL_CRYSTAL
  - CONFIG_ESP32_RTC_CLOCK_SOURCE_EXTERNAL_OSC
  - CONFIG_ESP32_RTC_CLOCK_SOURCE_INTERNAL_8MD256
- CONFIG_ESP32_RTC_XTAL_BOOTSTRAP_CYCLES (*CONFIG_ESP_SYSTEM_RTC_EXT_XTAL_BOOTSTRAP_CYCLES*)
- CONFIG_ESP32_SUPPORT_MULTIPLE_PHY_INIT_DATA_BIN (*CONFIG_ESP_PHY_MULTIPLE_INIT_DATA_BIN*)
- CONFIG_ESP_GRATUITOUS_ARP (*CONFIG_LWIP_ESP_GRATUITOUS_ARP*)
- CONFIG_ESP_SYSTEM_PD_FLASH (*CONFIG_ESP_SLEEP_POWER_DOWN_FLASH*)
- CONFIG_ESP_TCP_KEEP_CONNECTION_WHEN_IP_CHANGES (*CONFIG_LWIP_TCP_KEEP_CONNECTION_WHEN_IP_CHANGES*)
- CONFIG_EVENT_LOOP_PROFILING (*CONFIG_ESP_EVENT_LOOP_PROFILING*)
- CONFIG_FLASH_ENCRYPTION_ENABLED (*CONFIG_SECURE_FLASH_ENC_ENABLED*)
- CONFIG_FLASH_ENCRYPTION_UART_BOOTLOADER_ALLOW_CACHE (*CONFIG_SECURE_FLASH_UART_BOOTLOADER_ALLOW_CACHE*)
- CONFIG_FLASH_ENCRYPTION_UART_BOOTLOADER_ALLOW_DECRYPT (*CONFIG_SECURE_FLASH_UART_BOOTLOADER_ALLOW_DEC*)
- CONFIG_FLASH_ENCRYPTION_UART_BOOTLOADER_ALLOW_ENCRYPT (*CONFIG_SECURE_FLASH_UART_BOOTLOADER_ALLOW_ENC*)
- **CONFIG_GAP_INITIAL_TRACE_LEVEL (*CONFIG_BT_LOG_GAP_TRACE_LEVEL*)**
  - CONFIG_GAP_TRACE_LEVEL_NONE
  - CONFIG_GAP_TRACE_LEVEL_ERROR
  - CONFIG_GAP_TRACE_LEVEL_WARNING
  - CONFIG_GAP_TRACE_LEVEL_API
  - CONFIG_GAP_TRACE_LEVEL_EVENT
  - CONFIG_GAP_TRACE_LEVEL_DEBUG
  - CONFIG_GAP_TRACE_LEVEL_VERBOSE
- CONFIG_GARP_TMR_INTERVAL (*CONFIG_LWIP_GARP_TMR_INTERVAL*)
- CONFIG_GATTC_CACHE_NVS_FLASH (*CONFIG_BT_GATTC_CACHE_NVS_FLASH*)
- CONFIG_GATTC_ENABLE (*CONFIG_BT_GATTC_ENABLE*)
- CONFIG_GATTS_ENABLE (*CONFIG_BT_GATTS_ENABLE*)
- **CONFIG_GATTS_SEND_SERVICE_CHANGE_MODE (*CONFIG_BT_GATTS_SEND_SERVICE_CHANGE_MODE*)**
  - CONFIG_GATTS_SEND_SERVICE_CHANGE_MANUAL
  - CONFIG_GATTS_SEND_SERVICE_CHANGE_AUTO
- **CONFIG_GATT_INITIAL_TRACE_LEVEL (*CONFIG_BT_LOG_GATT_TRACE_LEVEL*)**
  - CONFIG_GATT_TRACE_LEVEL_NONE
  - CONFIG_GATT_TRACE_LEVEL_ERROR
  - CONFIG_GATT_TRACE_LEVEL_WARNING
  - CONFIG_GATT_TRACE_LEVEL_API
  - CONFIG_GATT_TRACE_LEVEL_EVENT
  - CONFIG_GATT_TRACE_LEVEL_DEBUG

    - CONFIG_GATT_TRACE_LEVEL_VERBOSE
- CONFIG_GDBSTUB_MAX_TASKS (*CONFIG_ESP_GDBSTUB_MAX_TASKS*)
- CONFIG_GDBSTUB_SUPPORT_TASKS (*CONFIG_ESP_GDBSTUB_SUPPORT_TASKS*)
- **CONFIG_HCI_INITIAL_TRACE_LEVEL (*CONFIG_BT_LOG_HCI_TRACE_LEVEL*)**
    - CONFIG_HCI_TRACE_LEVEL_NONE
    - CONFIG_HCI_TRACE_LEVEL_ERROR
    - CONFIG_HCI_TRACE_LEVEL_WARNING
    - CONFIG_HCI_TRACE_LEVEL_API
    - CONFIG_HCI_TRACE_LEVEL_EVENT
    - CONFIG_HCI_TRACE_LEVEL_DEBUG
    - CONFIG_HCI_TRACE_LEVEL_VERBOSE
- **CONFIG_HFP_AUDIO_DATA_PATH (*CONFIG_BT_HFP_AUDIO_DATA_PATH*)**
    - CONFIG_HFP_AUDIO_DATA_PATH_PCM
    - CONFIG_HFP_AUDIO_DATA_PATH_HCI
- CONFIG_HFP_ENABLE (*CONFIG_BT_HFP_ENABLE*)
- **CONFIG_HFP_ROLE (*CONFIG_BT_HFP_ROLE*)**
    - CONFIG_HFP_CLIENT_ENABLE
    - CONFIG_HFP_AG_ENABLE
- **CONFIG_HID_INITIAL_TRACE_LEVEL (*CONFIG_BT_LOG_HID_TRACE_LEVEL*)**
    - CONFIG_HID_TRACE_LEVEL_NONE
    - CONFIG_HID_TRACE_LEVEL_ERROR
    - CONFIG_HID_TRACE_LEVEL_WARNING
    - CONFIG_HID_TRACE_LEVEL_API
    - CONFIG_HID_TRACE_LEVEL_EVENT
    - CONFIG_HID_TRACE_LEVEL_DEBUG
    - CONFIG_HID_TRACE_LEVEL_VERBOSE
- CONFIG_INT_WDT (*CONFIG_ESP_INT_WDT*)
- CONFIG_INT_WDT_CHECK_CPU1 (*CONFIG_ESP_INT_WDT_CHECK_CPU1*)
- CONFIG_INT_WDT_TIMEOUT_MS (*CONFIG_ESP_INT_WDT_TIMEOUT_MS*)
- CONFIG_IPC_TASK_STACK_SIZE (*CONFIG_ESP_IPC_TASK_STACK_SIZE*)
- **CONFIG_L2CAP_INITIAL_TRACE_LEVEL (*CONFIG_BT_LOG_L2CAP_TRACE_LEVEL*)**
    - CONFIG_L2CAP_TRACE_LEVEL_NONE
    - CONFIG_L2CAP_TRACE_LEVEL_ERROR
    - CONFIG_L2CAP_TRACE_LEVEL_WARNING
    - CONFIG_L2CAP_TRACE_LEVEL_API
    - CONFIG_L2CAP_TRACE_LEVEL_EVENT
    - CONFIG_L2CAP_TRACE_LEVEL_DEBUG
    - CONFIG_L2CAP_TRACE_LEVEL_VERBOSE
- CONFIG_L2_TO_L3_COPY (*CONFIG_LWIP_L2_TO_L3_COPY*)
- **CONFIG_LOG_BOOTLOADER_LEVEL (*CONFIG_BOOTLOADER_LOG_LEVEL*)**
    - CONFIG_LOG_BOOTLOADER_LEVEL_NONE
    - CONFIG_LOG_BOOTLOADER_LEVEL_ERROR
    - CONFIG_LOG_BOOTLOADER_LEVEL_WARN
    - CONFIG_LOG_BOOTLOADER_LEVEL_INFO
    - CONFIG_LOG_BOOTLOADER_LEVEL_DEBUG
    - CONFIG_LOG_BOOTLOADER_LEVEL_VERBOSE
- CONFIG_MAIN_TASK_STACK_SIZE (*CONFIG_ESP_MAIN_TASK_STACK_SIZE*)
- CONFIG_MAKE_WARN_UNDEFINED_VARIABLES (*CONFIG_SDK_MAKE_WARN_UNDEFINED_VARIABLES*)
- CONFIG_MB_CONTROLLER_NOTIFY_QUEUE_SIZE (*CONFIG_FMB_CONTROLLER_NOTIFY_QUEUE_SIZE*)
- CONFIG_MB_CONTROLLER_NOTIFY_TIMEOUT (*CONFIG_FMB_CONTROLLER_NOTIFY_TIMEOUT*)
- CONFIG_MB_CONTROLLER_SLAVE_ID (*CONFIG_FMB_CONTROLLER_SLAVE_ID*)
- CONFIG_MB_CONTROLLER_SLAVE_ID_SUPPORT (*CONFIG_FMB_CONTROLLER_SLAVE_ID_SUPPORT*)
- CONFIG_MB_CONTROLLER_STACK_SIZE (*CONFIG_FMB_CONTROLLER_STACK_SIZE*)
- CONFIG_MB_EVENT_QUEUE_TIMEOUT (*CONFIG_FMB_EVENT_QUEUE_TIMEOUT*)
- CONFIG_MB_MASTER_DELAY_MS_CONVERT (*CONFIG_FMB_MASTER_DELAY_MS_CONVERT*)
- CONFIG_MB_MASTER_TIMEOUT_MS_RESPOND (*CONFIG_FMB_MASTER_TIMEOUT_MS_RESPOND*)
- CONFIG_MB_QUEUE_LENGTH (*CONFIG_FMB_QUEUE_LENGTH*)
- CONFIG_MB_SERIAL_BUF_SIZE (*CONFIG_FMB_SERIAL_BUF_SIZE*)

- CONFIG_MB_SERIAL_TASK_PRIO (*CONFIG_FMB_PORT_TASK_PRIO*)
- CONFIG_MB_SERIAL_TASK_STACK_SIZE (*CONFIG_FMB_PORT_TASK_STACK_SIZE*)
- CONFIG_MB_TIMER_GROUP (*CONFIG_FMB_TIMER_GROUP*)
- CONFIG_MB_TIMER_INDEX (*CONFIG_FMB_TIMER_INDEX*)
- CONFIG_MB_TIMER_PORT_ENABLED (*CONFIG_FMB_TIMER_PORT_ENABLED*)
- **CONFIG_MCA_INITIAL_TRACE_LEVEL (*CONFIG_BT_LOG_MCA_TRACE_LEVEL*)**
  - CONFIG_MCA_TRACE_LEVEL_NONE
  - CONFIG_MCA_TRACE_LEVEL_ERROR
  - CONFIG_MCA_TRACE_LEVEL_WARNING
  - CONFIG_MCA_TRACE_LEVEL_API
  - CONFIG_MCA_TRACE_LEVEL_EVENT
  - CONFIG_MCA_TRACE_LEVEL_DEBUG
  - CONFIG_MCA_TRACE_LEVEL_VERBOSE
- CONFIG_MESH_DUPLICATE_SCAN_CACHE_SIZE (*CONFIG_BTDM_MESH_DUPL_SCAN_CACHE_SIZE*)
- **CONFIG_MONITOR_BAUD (*CONFIG_ESPTOOLPY_MONITOR_BAUD*)**
  - CONFIG_MONITOR_BAUD_9600B
  - CONFIG_MONITOR_BAUD_57600B
  - CONFIG_MONITOR_BAUD_115200B
  - CONFIG_MONITOR_BAUD_230400B
  - CONFIG_MONITOR_BAUD_921600B
  - CONFIG_MONITOR_BAUD_2MB
  - CONFIG_MONITOR_BAUD_OTHER
- CONFIG_MONITOR_BAUD_OTHER_VAL (*CONFIG_ESPTOOLPY_MONITOR_BAUD_OTHER_VAL*)
- CONFIG_NIMBLE_ACL_BUF_COUNT (*CONFIG_BT_NIMBLE_ACL_BUF_COUNT*)
- CONFIG_NIMBLE_ACL_BUF_SIZE (*CONFIG_BT_NIMBLE_ACL_BUF_SIZE*)
- CONFIG_NIMBLE_ATT_PREFERRED_MTU (*CONFIG_BT_NIMBLE_ATT_PREFERRED_MTU*)
- CONFIG_NIMBLE_CRYPTO_STACK_MBEDTLS (*CONFIG_BT_NIMBLE_CRYPTO_STACK_MBEDTLS*)
- CONFIG_NIMBLE_DEBUG (*CONFIG_BT_NIMBLE_DEBUG*)
- CONFIG_NIMBLE_GAP_DEVICE_NAME_MAX_LEN (*CONFIG_BT_NIMBLE_GAP_DEVICE_NAME_MAX_LEN*)
- CONFIG_NIMBLE_HCI_EVT_BUF_SIZE (*CONFIG_BT_NIMBLE_HCI_EVT_BUF_SIZE*)
- CONFIG_NIMBLE_HCI_EVT_HI_BUF_COUNT (*CONFIG_BT_NIMBLE_HCI_EVT_HI_BUF_COUNT*)
- CONFIG_NIMBLE_HCI_EVT_LO_BUF_COUNT (*CONFIG_BT_NIMBLE_HCI_EVT_LO_BUF_COUNT*)
- CONFIG_NIMBLE_HS_FLOW_CTRL (*CONFIG_BT_NIMBLE_HS_FLOW_CTRL*)
- CONFIG_NIMBLE_HS_FLOW_CTRL_ITVL (*CONFIG_BT_NIMBLE_HS_FLOW_CTRL_ITVL*)
- CONFIG_NIMBLE_HS_FLOW_CTRL_THRESH (*CONFIG_BT_NIMBLE_HS_FLOW_CTRL_THRESH*)
- CONFIG_NIMBLE_HS_FLOW_CTRL_TX_ON_DISCONNECT (*CONFIG_BT_NIMBLE_HS_FLOW_CTRL_TX_ON_DISCONNECT*)
- CONFIG_NIMBLE_L2CAP_COC_MAX_NUM (*CONFIG_BT_NIMBLE_L2CAP_COC_MAX_NUM*)
- CONFIG_NIMBLE_MAX_BONDS (*CONFIG_BT_NIMBLE_MAX_BONDS*)
- CONFIG_NIMBLE_MAX_CCCDS (*CONFIG_BT_NIMBLE_MAX_CCCDS*)
- CONFIG_NIMBLE_MAX_CONNECTIONS (*CONFIG_BT_NIMBLE_MAX_CONNECTIONS*)
- **CONFIG_NIMBLE_MEM_ALLOC_MODE (*CONFIG_BT_NIMBLE_MEM_ALLOC_MODE*)**
  - CONFIG_NIMBLE_MEM_ALLOC_MODE_INTERNAL
  - CONFIG_NIMBLE_MEM_ALLOC_MODE_EXTERNAL
  - CONFIG_NIMBLE_MEM_ALLOC_MODE_DEFAULT
- CONFIG_NIMBLE_MESH (*CONFIG_BT_NIMBLE_MESH*)
- CONFIG_NIMBLE_MESH_DEVICE_NAME (*CONFIG_BT_NIMBLE_MESH_DEVICE_NAME*)
- CONFIG_NIMBLE_MESH_FRIEND (*CONFIG_BT_NIMBLE_MESH_FRIEND*)
- CONFIG_NIMBLE_MESH_GATT_PROXY (*CONFIG_BT_NIMBLE_MESH_GATT_PROXY*)
- CONFIG_NIMBLE_MESH_LOW_POWER (*CONFIG_BT_NIMBLE_MESH_LOW_POWER*)
- CONFIG_NIMBLE_MESH_PB_ADV (*CONFIG_BT_NIMBLE_MESH_PB_ADV*)
- CONFIG_NIMBLE_MESH_PB_GATT (*CONFIG_BT_NIMBLE_MESH_PB_GATT*)
- CONFIG_NIMBLE_MESH_PROV (*CONFIG_BT_NIMBLE_MESH_PROV*)
- CONFIG_NIMBLE_MESH_PROXY (*CONFIG_BT_NIMBLE_MESH_PROXY*)
- CONFIG_NIMBLE_MESH_RELAY (*CONFIG_BT_NIMBLE_MESH_RELAY*)
- CONFIG_NIMBLE_MSYS1_BLOCK_COUNT (*CONFIG_BT_NIMBLE_MSYS1_BLOCK_COUNT*)
- CONFIG_NIMBLE_NVS_PERSIST (*CONFIG_BT_NIMBLE_NVS_PERSIST*)
- **CONFIG_NIMBLE_PINNED_TO_CORE_CHOICE (*CONFIG_BT_NIMBLE_PINNED_TO_CORE_CHOICE*)**

  - CONFIG_NIMBLE_PINNED_TO_CORE_0
  - CONFIG_NIMBLE_PINNED_TO_CORE_1
- CONFIG_NIMBLE_ROLE_BROADCASTER (*CONFIG_BT_NIMBLE_ROLE_BROADCASTER*)
- CONFIG_NIMBLE_ROLE_CENTRAL (*CONFIG_BT_NIMBLE_ROLE_CENTRAL*)
- CONFIG_NIMBLE_ROLE_OBSERVER (*CONFIG_BT_NIMBLE_ROLE_OBSERVER*)
- CONFIG_NIMBLE_ROLE_PERIPHERAL (*CONFIG_BT_NIMBLE_ROLE_PERIPHERAL*)
- CONFIG_NIMBLE_RPA_TIMEOUT (*CONFIG_BT_NIMBLE_RPA_TIMEOUT*)
- CONFIG_NIMBLE_SM_LEGACY (*CONFIG_BT_NIMBLE_SM_LEGACY*)
- CONFIG_NIMBLE_SM_SC (*CONFIG_BT_NIMBLE_SM_SC*)
- CONFIG_NIMBLE_SM_SC_DEBUG_KEYS (*CONFIG_BT_NIMBLE_SM_SC_DEBUG_KEYS*)
- CONFIG_NIMBLE_SVC_GAP_APPEARANCE (*CONFIG_BT_NIMBLE_SVC_GAP_APPEARANCE*)
- CONFIG_NIMBLE_SVC_GAP_DEVICE_NAME (*CONFIG_BT_NIMBLE_SVC_GAP_DEVICE_NAME*)
- CONFIG_NIMBLE_TASK_STACK_SIZE (*CONFIG_BT_NIMBLE_TASK_STACK_SIZE*)
- CONFIG_NO_BLOBS (*CONFIG_ESP32_NO_BLOBS*)
- **CONFIG_NUMBER_OF_UNIVERSAL_MAC_ADDRESS (*CONFIG_ESP32_UNIVERSAL_MAC_ADDRESSES*)**
  - CONFIG_TWO_UNIVERSAL_MAC_ADDRESS
  - CONFIG_FOUR_UNIVERSAL_MAC_ADDRESS
- **CONFIG_OPTIMIZATION_ASSERTION_LEVEL (*CONFIG_COMPILER_OPTIMIZATION_ASSERTION_LEVEL*)**
  - CONFIG_OPTIMIZATION_ASSERTIONS_ENABLED
  - CONFIG_OPTIMIZATION_ASSERTIONS_SILENT
  - CONFIG_OPTIMIZATION_ASSERTIONS_DISABLED
- **CONFIG_OPTIMIZATION_COMPILER (*CONFIG_COMPILER_OPTIMIZATION*)**
  - CONFIG_COMPILER_OPTIMIZATION_LEVEL_DEBUG
  - CONFIG_COMPILER_OPTIMIZATION_LEVEL_RELEASE
- **CONFIG_OSI_INITIAL_TRACE_LEVEL (*CONFIG_BT_LOG_OSI_TRACE_LEVEL*)**
  - CONFIG_OSI_TRACE_LEVEL_NONE
  - CONFIG_OSI_TRACE_LEVEL_ERROR
  - CONFIG_OSI_TRACE_LEVEL_WARNING
  - CONFIG_OSI_TRACE_LEVEL_API
  - CONFIG_OSI_TRACE_LEVEL_EVENT
  - CONFIG_OSI_TRACE_LEVEL_DEBUG
  - CONFIG_OSI_TRACE_LEVEL_VERBOSE
- **CONFIG_PAN_INITIAL_TRACE_LEVEL (*CONFIG_BT_LOG_PAN_TRACE_LEVEL*)**
  - CONFIG_PAN_TRACE_LEVEL_NONE
  - CONFIG_PAN_TRACE_LEVEL_ERROR
  - CONFIG_PAN_TRACE_LEVEL_WARNING
  - CONFIG_PAN_TRACE_LEVEL_API
  - CONFIG_PAN_TRACE_LEVEL_EVENT
  - CONFIG_PAN_TRACE_LEVEL_DEBUG
  - CONFIG_PAN_TRACE_LEVEL_VERBOSE
- CONFIG_POST_EVENTS_FROM_IRAM_ISR (*CONFIG_ESP_EVENT_POST_FROM_IRAM_ISR*)
- CONFIG_POST_EVENTS_FROM_ISR (*CONFIG_ESP_EVENT_POST_FROM_ISR*)
- CONFIG_PPP_CHAP_SUPPORT (*CONFIG_LWIP_PPP_CHAP_SUPPORT*)
- CONFIG_PPP_DEBUG_ON (*CONFIG_LWIP_PPP_DEBUG_ON*)
- CONFIG_PPP_MPPE_SUPPORT (*CONFIG_LWIP_PPP_MPPE_SUPPORT*)
- CONFIG_PPP_MSCHAP_SUPPORT (*CONFIG_LWIP_PPP_MSCHAP_SUPPORT*)
- CONFIG_PPP_NOTIFY_PHASE_SUPPORT (*CONFIG_LWIP_PPP_NOTIFY_PHASE_SUPPORT*)
- CONFIG_PPP_PAP_SUPPORT (*CONFIG_LWIP_PPP_PAP_SUPPORT*)
- CONFIG_PPP_SUPPORT (*CONFIG_LWIP_PPP_SUPPORT*)
- CONFIG_PYTHON (*CONFIG_SDK_PYTHON*)
- CONFIG_REDUCE_PHY_TX_POWER (*CONFIG_ESP_PHY_REDUCE_TX_POWER*)
- **CONFIG_RFCOMM_INITIAL_TRACE_LEVEL (*CONFIG_BT_LOG_RFCOMM_TRACE_LEVEL*)**
  - CONFIG_RFCOMM_TRACE_LEVEL_NONE
  - CONFIG_RFCOMM_TRACE_LEVEL_ERROR
  - CONFIG_RFCOMM_TRACE_LEVEL_WARNING

  - CONFIG_RFCOMM_TRACE_LEVEL_API
  - CONFIG_RFCOMM_TRACE_LEVEL_EVENT
  - CONFIG_RFCOMM_TRACE_LEVEL_DEBUG
  - CONFIG_RFCOMM_TRACE_LEVEL_VERBOSE
- **CONFIG_SCAN_DUPLICATE_TYPE (*CONFIG_BTDM_SCAN_DUPL_TYPE*)**
  - CONFIG_SCAN_DUPLICATE_BY_DEVICE_ADDR
  - CONFIG_SCAN_DUPLICATE_BY_ADV_DATA
  - CONFIG_SCAN_DUPLICATE_BY_ADV_DATA_AND_DEVICE_ADDR
- CONFIG_SEMIHOSTFS_MAX_MOUNT_POINTS (*CONFIG_VFS_SEMIHOSTFS_MAX_MOUNT_POINTS*)
- **CONFIG_SMP_INITIAL_TRACE_LEVEL (*CONFIG_BT_LOG_SMP_TRACE_LEVEL*)**
  - CONFIG_SMP_TRACE_LEVEL_NONE
  - CONFIG_SMP_TRACE_LEVEL_ERROR
  - CONFIG_SMP_TRACE_LEVEL_WARNING
  - CONFIG_SMP_TRACE_LEVEL_API
  - CONFIG_SMP_TRACE_LEVEL_EVENT
  - CONFIG_SMP_TRACE_LEVEL_DEBUG
  - CONFIG_SMP_TRACE_LEVEL_VERBOSE
- CONFIG_SMP_SLAVE_CON_PARAMS_UPD_ENABLE (*CONFIG_BT_SMP_SLAVE_CON_PARAMS_UPD_ENABLE*)
- CONFIG_SPIRAM_SUPPORT (*CONFIG_ESP32_SPIRAM_SUPPORT*)
- **CONFIG_SPI_FLASH_WRITING_DANGEROUS_REGIONS (*CONFIG_SPI_FLASH_DANGEROUS_WRITE*)**
  - CONFIG_SPI_FLASH_WRITING_DANGEROUS_REGIONS_ABORTS
  - CONFIG_SPI_FLASH_WRITING_DANGEROUS_REGIONS_FAILS
  - CONFIG_SPI_FLASH_WRITING_DANGEROUS_REGIONS_ALLOWED
- **CONFIG_STACK_CHECK_MODE (*CONFIG_COMPILER_STACK_CHECK_MODE*)**
  - CONFIG_STACK_CHECK_NONE
  - CONFIG_STACK_CHECK_NORM
  - CONFIG_STACK_CHECK_STRONG
  - CONFIG_STACK_CHECK_ALL
- CONFIG_SUPPORT_TERMIOS (*CONFIG_VFS_SUPPORT_TERMIOS*)
- CONFIG_SUPPRESS_SELECT_DEBUG_OUTPUT (*CONFIG_VFS_SUPPRESS_SELECT_DEBUG_OUTPUT*)
- CONFIG_SW_COEXIST_ENABLE (*CONFIG_ESP32_WIFI_SW_COEXIST_ENABLE*)
- CONFIG_SYSTEM_EVENT_QUEUE_SIZE (*CONFIG_ESP_SYSTEM_EVENT_QUEUE_SIZE*)
- CONFIG_SYSTEM_EVENT_TASK_STACK_SIZE (*CONFIG_ESP_SYSTEM_EVENT_TASK_STACK_SIZE*)
- CONFIG_SYSVIEW_BUF_WAIT_TMO (*CONFIG_APPTRACE_SV_BUF_WAIT_TMO*)
- CONFIG_SYSVIEW_ENABLE (*CONFIG_APPTRACE_SV_ENABLE*)
- CONFIG_SYSVIEW_EVT_IDLE_ENABLE (*CONFIG_APPTRACE_SV_EVT_IDLE_ENABLE*)
- CONFIG_SYSVIEW_EVT_ISR_ENTER_ENABLE (*CONFIG_APPTRACE_SV_EVT_ISR_ENTER_ENABLE*)
- CONFIG_SYSVIEW_EVT_ISR_EXIT_ENABLE (*CONFIG_APPTRACE_SV_EVT_ISR_EXIT_ENABLE*)
- CONFIG_SYSVIEW_EVT_ISR_TO_SCHEDULER_ENABLE (*CONFIG_APPTRACE_SV_EVT_ISR_TO_SCHED_ENABLE*)
- CONFIG_SYSVIEW_EVT_OVERFLOW_ENABLE (*CONFIG_APPTRACE_SV_EVT_OVERFLOW_ENABLE*)
- CONFIG_SYSVIEW_EVT_TASK_CREATE_ENABLE (*CONFIG_APPTRACE_SV_EVT_TASK_CREATE_ENABLE*)
- CONFIG_SYSVIEW_EVT_TASK_START_EXEC_ENABLE (*CONFIG_APPTRACE_SV_EVT_TASK_START_EXEC_ENABL*
- CONFIG_SYSVIEW_EVT_TASK_START_READY_ENABLE (*CONFIG_APPTRACE_SV_EVT_TASK_START_READY_EN*
- CONFIG_SYSVIEW_EVT_TASK_STOP_EXEC_ENABLE (*CONFIG_APPTRACE_SV_EVT_TASK_STOP_EXEC_ENABLE*)
- CONFIG_SYSVIEW_EVT_TASK_STOP_READY_ENABLE (*CONFIG_APPTRACE_SV_EVT_TASK_STOP_READY_ENAB*
- CONFIG_SYSVIEW_EVT_TASK_TERMINATE_ENABLE (*CONFIG_APPTRACE_SV_EVT_TASK_TERMINATE_ENABLE*)
- CONFIG_SYSVIEW_EVT_TIMER_ENTER_ENABLE (*CONFIG_APPTRACE_SV_EVT_TIMER_ENTER_ENABLE*)
- CONFIG_SYSVIEW_EVT_TIMER_EXIT_ENABLE (*CONFIG_APPTRACE_SV_EVT_TIMER_EXIT_ENABLE*)
- CONFIG_SYSVIEW_MAX_TASKS (*CONFIG_APPTRACE_SV_MAX_TASKS*)
- **CONFIG_SYSVIEW_TS_SOURCE (*CONFIG_APPTRACE_SV_TS_SOURCE*)**
  - CONFIG_SYSVIEW_TS_SOURCE_CCOUNT
  - CONFIG_SYSVIEW_TS_SOURCE_TIMER_00
  - CONFIG_SYSVIEW_TS_SOURCE_TIMER_01
  - CONFIG_SYSVIEW_TS_SOURCE_TIMER_10
  - CONFIG_SYSVIEW_TS_SOURCE_TIMER_11
  - CONFIG_SYSVIEW_TS_SOURCE_ESP_TIMER
- CONFIG_TASK_WDT (*CONFIG_ESP_TASK_WDT*)

- CONFIG_TASK_WDT_CHECK_IDLE_TASK_CPU0 (*CONFIG_ESP_TASK_WDT_CHECK_IDLE_TASK_CPU0*)
- CONFIG_TASK_WDT_CHECK_IDLE_TASK_CPU1 (*CONFIG_ESP_TASK_WDT_CHECK_IDLE_TASK_CPU1*)
- CONFIG_TASK_WDT_PANIC (*CONFIG_ESP_TASK_WDT_PANIC*)
- CONFIG_TASK_WDT_TIMEOUT_S (*CONFIG_ESP_TASK_WDT_TIMEOUT_S*)
- CONFIG_TCPIP_RECVMBOX_SIZE (*CONFIG_LWIP_TCPIP_RECVMBOX_SIZE*)
- **CONFIG_TCPIP_TASK_AFFINITY (*CONFIG_LWIP_TCPIP_TASK_AFFINITY*)**
  - CONFIG_TCPIP_TASK_AFFINITY_NO_AFFINITY
  - CONFIG_TCPIP_TASK_AFFINITY_CPU0
  - CONFIG_TCPIP_TASK_AFFINITY_CPU1
- CONFIG_TCPIP_TASK_STACK_SIZE (*CONFIG_LWIP_TCPIP_TASK_STACK_SIZE*)
- CONFIG_TCP_MAXRTX (*CONFIG_LWIP_TCP_MAXRTX*)
- CONFIG_TCP_MSL (*CONFIG_LWIP_TCP_MSL*)
- CONFIG_TCP_MSS (*CONFIG_LWIP_TCP_MSS*)
- **CONFIG_TCP_OVERSIZE (*CONFIG_LWIP_TCP_OVERSIZE*)**
  - CONFIG_TCP_OVERSIZE_MSS
  - CONFIG_TCP_OVERSIZE_QUARTER_MSS
  - CONFIG_TCP_OVERSIZE_DISABLE
- CONFIG_TCP_QUEUE_OOSEQ (*CONFIG_LWIP_TCP_QUEUE_OOSEQ*)
- CONFIG_TCP_RECVMBOX_SIZE (*CONFIG_LWIP_TCP_RECVMBOX_SIZE*)
- CONFIG_TCP_SND_BUF_DEFAULT (*CONFIG_LWIP_TCP_SND_BUF_DEFAULT*)
- CONFIG_TCP_SYNMAXRTX (*CONFIG_LWIP_TCP_SYNMAXRTX*)
- CONFIG_TCP_WND_DEFAULT (*CONFIG_LWIP_TCP_WND_DEFAULT*)
- CONFIG_TIMER_QUEUE_LENGTH (*CONFIG_FREERTOS_TIMER_QUEUE_LENGTH*)
- CONFIG_TIMER_TASK_PRIORITY (*CONFIG_FREERTOS_TIMER_TASK_PRIORITY*)
- CONFIG_TIMER_TASK_STACK_DEPTH (*CONFIG_FREERTOS_TIMER_TASK_STACK_DEPTH*)
- CONFIG_TIMER_TASK_STACK_SIZE (*CONFIG_ESP_TIMER_TASK_STACK_SIZE*)
- CONFIG_TOOLPREFIX (*CONFIG_SDK_TOOLPREFIX*)
- CONFIG_UDP_RECVMBOX_SIZE (*CONFIG_LWIP_UDP_RECVMBOX_SIZE*)
- CONFIG_ULP_COPROC_ENABLED (*CONFIG_ESP32_ULP_COPROC_ENABLED*)
- CONFIG_ULP_COPROC_RESERVE_MEM (*CONFIG_ESP32_ULP_COPROC_RESERVE_MEM*)
- CONFIG_USE_ONLY_LWIP_SELECT (*CONFIG_LWIP_USE_ONLY_LWIP_SELECT*)
- CONFIG_WARN_WRITE_STRINGS (*CONFIG_COMPILER_WARN_WRITE_STRINGS*)
- CONFIG_WIFI_LWIP_ALLOCATION_FROM_SPIRAM_FIRST (*CONFIG_SPIRAM_TRY_ALLOCATE_WIFI_LWIP*)

2.9.7 Customisations

Because IDF builds by default with *Warning On Undefined Variables*, when the Kconfig tool generates Makefiles (the `auto.conf` file) its behaviour has been customised. In normal Kconfig, a variable which is set to "no" is undefined. In IDF's version of Kconfig, this variable is defined in the Makefile but has an empty value.

(Note that `ifdef` and `ifndef` can still be used in Makefiles, because they test if a variable is defined *and has a non-empty value*.)

When generating header files for C & C++, the behaviour is not customised - so `#ifdef` can be used to test if a boolean config item is set or not.

2.10 Error Codes Reference

This section lists various error code constants defined in ESP-IDF.

For general information about error codes in ESP-IDF, see *Error Handling*.

ESP_FAIL (-1): Generic esp_err_t code indicating failure

ESP_OK (0): esp_err_t value indicating success (no error)

ESP_ERR_NO_MEM **(0x101)**: Out of memory

ESP_ERR_INVALID_ARG **(0x102)**: Invalid argument

ESP_ERR_INVALID_STATE **(0x103)**: Invalid state

ESP_ERR_INVALID_SIZE **(0x104)**: Invalid size

ESP_ERR_NOT_FOUND **(0x105)**: Requested resource not found

ESP_ERR_NOT_SUPPORTED **(0x106)**: Operation or feature not supported

ESP_ERR_TIMEOUT **(0x107)**: Operation timed out

ESP_ERR_INVALID_RESPONSE **(0x108)**: Received response was invalid

ESP_ERR_INVALID_CRC **(0x109)**: CRC or checksum was invalid

ESP_ERR_INVALID_VERSION **(0x10a)**: Version was invalid

ESP_ERR_INVALID_MAC **(0x10b)**: MAC address was invalid

ESP_ERR_NOT_FINISHED **(0x10c)**: There are items remained to retrieve

ESP_ERR_NVS_BASE **(0x1100)**: Starting number of error codes

ESP_ERR_NVS_NOT_INITIALIZED **(0x1101)**: The storage driver is not initialized

ESP_ERR_NVS_NOT_FOUND **(0x1102)**: Id namespace doesn't exist yet and mode is NVS_READONLY

ESP_ERR_NVS_TYPE_MISMATCH **(0x1103)**: The type of set or get operation doesn't match the type of value stored in NVS

ESP_ERR_NVS_READ_ONLY **(0x1104)**: Storage handle was opened as read only

ESP_ERR_NVS_NOT_ENOUGH_SPACE **(0x1105)**: There is not enough space in the underlying storage to save the value

ESP_ERR_NVS_INVALID_NAME **(0x1106)**: Namespace name doesn't satisfy constraints

ESP_ERR_NVS_INVALID_HANDLE **(0x1107)**: Handle has been closed or is NULL

ESP_ERR_NVS_REMOVE_FAILED **(0x1108)**: The value wasn't updated because flash write operation has failed. The value was written however, and update will be finished after re-initialization of nvs, provided that flash operation doesn't fail again.

ESP_ERR_NVS_KEY_TOO_LONG **(0x1109)**: Key name is too long

ESP_ERR_NVS_PAGE_FULL **(0x110a)**: Internal error; never returned by nvs API functions

ESP_ERR_NVS_INVALID_STATE **(0x110b)**: NVS is in an inconsistent state due to a previous error. Call nvs_flash_init and nvs_open again, then retry.

ESP_ERR_NVS_INVALID_LENGTH **(0x110c)**: String or blob length is not sufficient to store data

ESP_ERR_NVS_NO_FREE_PAGES **(0x110d)**: NVS partition doesn't contain any empty pages. This may happen if NVS partition was truncated. Erase the whole partition and call nvs_flash_init again.

ESP_ERR_NVS_VALUE_TOO_LONG **(0x110e)**: Value doesn't fit into the entry or string or blob length is longer than supported by the implementation

ESP_ERR_NVS_PART_NOT_FOUND **(0x110f)**: Partition with specified name is not found in the partition table

ESP_ERR_NVS_NEW_VERSION_FOUND **(0x1110)**: NVS partition contains data in new format and cannot be recognized by this version of code

ESP_ERR_NVS_XTS_ENCR_FAILED **(0x1111)**: XTS encryption failed while writing NVS entry

ESP_ERR_NVS_XTS_DECR_FAILED **(0x1112)**: XTS decryption failed while reading NVS entry

ESP_ERR_NVS_XTS_CFG_FAILED **(0x1113)**: XTS configuration setting failed

ESP_ERR_NVS_XTS_CFG_NOT_FOUND **(0x1114)**: XTS configuration not found

ESP_ERR_NVS_ENCR_NOT_SUPPORTED **(0x1115)**: NVS encryption is not supported in this version

ESP_ERR_NVS_KEYS_NOT_INITIALIZED **(0x1116)**: NVS key partition is uninitialized

ESP_ERR_NVS_CORRUPT_KEY_PART **(0x1117)**: NVS key partition is corrupt

ESP_ERR_NVS_CONTENT_DIFFERS **(0x1118)**: Internal error; never returned by nvs API functions. NVS key is different in comparison

ESP_ERR_NVS_WRONG_ENCRYPTION **(0x1119)**: NVS partition is marked as encrypted with generic flash encryption. This is forbidden since the NVS encryption works differently.

ESP_ERR_ULP_BASE **(0x1200)**: Offset for ULP-related error codes

ESP_ERR_ULP_SIZE_TOO_BIG **(0x1201)**: Program doesn't fit into RTC memory reserved for the ULP

ESP_ERR_ULP_INVALID_LOAD_ADDR **(0x1202)**: Load address is outside of RTC memory reserved for the ULP

ESP_ERR_ULP_DUPLICATE_LABEL **(0x1203)**: More than one label with the same number was defined

ESP_ERR_ULP_UNDEFINED_LABEL **(0x1204)**: Branch instructions references an undefined label

ESP_ERR_ULP_BRANCH_OUT_OF_RANGE **(0x1205)**: Branch target is out of range of B instruction (try replacing with BX)

ESP_ERR_OTA_BASE **(0x1500)**: Base error code for ota_ops api

ESP_ERR_OTA_PARTITION_CONFLICT **(0x1501)**: Error if request was to write or erase the current running partition

ESP_ERR_OTA_SELECT_INFO_INVALID **(0x1502)**: Error if OTA data partition contains invalid content

ESP_ERR_OTA_VALIDATE_FAILED **(0x1503)**: Error if OTA app image is invalid

ESP_ERR_OTA_SMALL_SEC_VER **(0x1504)**: Error if the firmware has a secure version less than the running firmware.

ESP_ERR_OTA_ROLLBACK_FAILED **(0x1505)**: Error if flash does not have valid firmware in passive partition and hence rollback is not possible

ESP_ERR_OTA_ROLLBACK_INVALID_STATE **(0x1506)**: Error if current active firmware is still marked in pending validation state (ESP_OTA_IMG_PENDING_VERIFY), essentially first boot of firmware image post upgrade and hence firmware upgrade is not possible

ESP_ERR_EFUSE **(0x1600)**: Base error code for efuse api.

ESP_OK_EFUSE_CNT **(0x1601)**: OK the required number of bits is set.

ESP_ERR_EFUSE_CNT_IS_FULL **(0x1602)**: Error field is full.

ESP_ERR_EFUSE_REPEATED_PROG **(0x1603)**: Error repeated programming of programmed bits is strictly forbidden.

ESP_ERR_CODING **(0x1604)**: Error while a encoding operation.

ESP_ERR_NOT_ENOUGH_UNUSED_KEY_BLOCKS **(0x1605)**: Error not enough unused key blocks available

ESP_ERR_DAMAGED_READING **(0x1606)**: Error. Burn or reset was done during a reading operation leads to damage read data. This error is internal to the efuse component and not returned by any public API.

ESP_ERR_IMAGE_BASE **(0x2000)**

ESP_ERR_IMAGE_FLASH_FAIL **(0x2001)**

ESP_ERR_IMAGE_INVALID **(0x2002)**

ESP_ERR_WIFI_BASE **(0x3000)**: Starting number of WiFi error codes

ESP_ERR_WIFI_NOT_INIT **(0x3001)**: WiFi driver was not installed by esp_wifi_init

ESP_ERR_WIFI_NOT_STARTED **(0x3002)**: WiFi driver was not started by esp_wifi_start

ESP_ERR_WIFI_NOT_STOPPED **(0x3003)**: WiFi driver was not stopped by esp_wifi_stop

ESP_ERR_WIFI_IF **(0x3004)**: WiFi interface error

ESP_ERR_WIFI_MODE **(0x3005)**: WiFi mode error

ESP_ERR_WIFI_STATE **(0x3006)**: WiFi internal state error

ESP_ERR_WIFI_CONN **(0x3007)**: WiFi internal control block of station or soft-AP error

ESP_ERR_WIFI_NVS **(0x3008)**: WiFi internal NVS module error

ESP_ERR_WIFI_MAC **(0x3009)**: MAC address is invalid

ESP_ERR_WIFI_SSID **(0x300a)**: SSID is invalid

ESP_ERR_WIFI_PASSWORD **(0x300b)**: Password is invalid

ESP_ERR_WIFI_TIMEOUT **(0x300c)**: Timeout error

ESP_ERR_WIFI_WAKE_FAIL **(0x300d)**: WiFi is in sleep state(RF closed) and wakeup fail

ESP_ERR_WIFI_WOULD_BLOCK **(0x300e)**: The caller would block

ESP_ERR_WIFI_NOT_CONNECT **(0x300f)**: Station still in disconnect status

ESP_ERR_WIFI_POST **(0x3012)**: Failed to post the event to WiFi task

ESP_ERR_WIFI_INIT_STATE **(0x3013)**: Invalid WiFi state when init/deinit is called

ESP_ERR_WIFI_STOP_STATE **(0x3014)**: Returned when WiFi is stopping

ESP_ERR_WIFI_NOT_ASSOC **(0x3015)**: The WiFi connection is not associated

ESP_ERR_WIFI_TX_DISALLOW **(0x3016)**: The WiFi TX is disallowed

ESP_ERR_WIFI_REGISTRAR **(0x3033)**: WPS registrar is not supported

ESP_ERR_WIFI_WPS_TYPE **(0x3034)**: WPS type error

ESP_ERR_WIFI_WPS_SM **(0x3035)**: WPS state machine is not initialized

ESP_ERR_ESPNOW_BASE **(0x3064)**: ESPNOW error number base.

ESP_ERR_ESPNOW_NOT_INIT **(0x3065)**: ESPNOW is not initialized.

ESP_ERR_ESPNOW_ARG **(0x3066)**: Invalid argument

ESP_ERR_ESPNOW_NO_MEM **(0x3067)**: Out of memory

ESP_ERR_ESPNOW_FULL **(0x3068)**: ESPNOW peer list is full

ESP_ERR_ESPNOW_NOT_FOUND **(0x3069)**: ESPNOW peer is not found

ESP_ERR_ESPNOW_INTERNAL **(0x306a)**: Internal error

ESP_ERR_ESPNOW_EXIST **(0x306b)**: ESPNOW peer has existed

ESP_ERR_ESPNOW_IF **(0x306c)**: Interface error

ESP_ERR_DPP_FAILURE **(0x3097)**: Generic failure during DPP Operation

ESP_ERR_DPP_TX_FAILURE **(0x3098)**: DPP Frame Tx failed OR not Acked

ESP_ERR_DPP_INVALID_ATTR **(0x3099)**: Encountered invalid DPP Attribute

ESP_ERR_MESH_BASE **(0x4000)**: Starting number of MESH error codes

ESP_ERR_MESH_WIFI_NOT_START **(0x4001)**

ESP_ERR_MESH_NOT_INIT **(0x4002)**

ESP_ERR_MESH_NOT_CONFIG **(0x4003)**

ESP_ERR_MESH_NOT_START **(0x4004)**

ESP_ERR_MESH_NOT_SUPPORT **(0x4005)**

ESP_ERR_MESH_NOT_ALLOWED **(0x4006)**

ESP_ERR_MESH_NO_MEMORY **(0x4007)**

ESP_ERR_MESH_ARGUMENT **(0x4008)**

ESP_ERR_MESH_EXCEED_MTU **(0x4009)**

ESP_ERR_MESH_TIMEOUT **(0x400a)**

ESP_ERR_MESH_DISCONNECTED **(0x400b)**

ESP_ERR_MESH_QUEUE_FAIL **(0x400c)**

ESP_ERR_MESH_QUEUE_FULL **(0x400d)**

ESP_ERR_MESH_NO_PARENT_FOUND **(0x400e)**

ESP_ERR_MESH_NO_ROUTE_FOUND **(0x400f)**

ESP_ERR_MESH_OPTION_NULL **(0x4010)**

ESP_ERR_MESH_OPTION_UNKNOWN **(0x4011)**

ESP_ERR_MESH_XON_NO_WINDOW **(0x4012)**

ESP_ERR_MESH_INTERFACE **(0x4013)**

ESP_ERR_MESH_DISCARD_DUPLICATE **(0x4014)**

ESP_ERR_MESH_DISCARD **(0x4015)**

ESP_ERR_MESH_VOTING **(0x4016)**

ESP_ERR_MESH_XMIT **(0x4017)**

ESP_ERR_MESH_QUEUE_READ **(0x4018)**

ESP_ERR_MESH_PS **(0x4019)**

ESP_ERR_MESH_RECV_RELEASE **(0x401a)**

ESP_ERR_ESP_NETIF_BASE **(0x5000)**

ESP_ERR_ESP_NETIF_INVALID_PARAMS **(0x5001)**

ESP_ERR_ESP_NETIF_IF_NOT_READY **(0x5002)**

ESP_ERR_ESP_NETIF_DHCPC_START_FAILED **(0x5003)**

ESP_ERR_ESP_NETIF_DHCP_ALREADY_STARTED **(0x5004)**

ESP_ERR_ESP_NETIF_DHCP_ALREADY_STOPPED **(0x5005)**

ESP_ERR_ESP_NETIF_NO_MEM **(0x5006)**

ESP_ERR_ESP_NETIF_DHCP_NOT_STOPPED **(0x5007)**

ESP_ERR_ESP_NETIF_DRIVER_ATTACH_FAILED **(0x5008)**

ESP_ERR_ESP_NETIF_INIT_FAILED **(0x5009)**

ESP_ERR_ESP_NETIF_DNS_NOT_CONFIGURED **(0x500a)**

ESP_ERR_ESP_NETIF_MLD6_FAILED **(0x500b)**

ESP_ERR_ESP_NETIF_IP6_ADDR_FAILED **(0x500c)**

ESP_ERR_FLASH_BASE **(0x6000)**: Starting number of flash error codes

ESP_ERR_FLASH_OP_FAIL **(0x6001)**

ESP_ERR_FLASH_OP_TIMEOUT **(0x6002)**

ESP_ERR_FLASH_NOT_INITIALISED **(0x6003)**

ESP_ERR_FLASH_UNSUPPORTED_HOST **(0x6004)**

ESP_ERR_FLASH_UNSUPPORTED_CHIP **(0x6005)**

ESP_ERR_FLASH_PROTECTED **(0x6006)**

ESP_ERR_HTTP_BASE **(0x7000)**: Starting number of HTTP error codes

ESP_ERR_HTTP_MAX_REDIRECT **(0x7001)**: The error exceeds the number of HTTP redirects

ESP_ERR_HTTP_CONNECT **(0x7002)**: Error open the HTTP connection

ESP_ERR_HTTP_WRITE_DATA **(0x7003)**: Error write HTTP data

ESP_ERR_HTTP_FETCH_HEADER **(0x7004)**: Error read HTTP header from server

ESP_ERR_HTTP_INVALID_TRANSPORT **(0x7005)**: There are no transport support for the input scheme

ESP_ERR_HTTP_CONNECTING **(0x7006)**: HTTP connection hasn't been established yet

ESP_ERR_HTTP_EAGAIN **(0x7007)**: Mapping of errno EAGAIN to esp_err_t

ESP_ERR_HTTP_CONNECTION_CLOSED **(0x7008)**: Read FIN from peer and the connection closed

ESP_ERR_ESP_TLS_BASE **(0x8000)**: Starting number of ESP-TLS error codes

ESP_ERR_ESP_TLS_CANNOT_RESOLVE_HOSTNAME **(0x8001)**: Error if hostname couldn't be resolved upon tls connection

ESP_ERR_ESP_TLS_CANNOT_CREATE_SOCKET **(0x8002)**: Failed to create socket

ESP_ERR_ESP_TLS_UNSUPPORTED_PROTOCOL_FAMILY **(0x8003)**: Unsupported protocol family

ESP_ERR_ESP_TLS_FAILED_CONNECT_TO_HOST **(0x8004)**: Failed to connect to host

ESP_ERR_ESP_TLS_SOCKET_SETOPT_FAILED **(0x8005)**: failed to set/get socket option

ESP_ERR_ESP_TLS_CONNECTION_TIMEOUT **(0x8006)**: new connection in esp_tls_low_level_conn connection timeouted

ESP_ERR_ESP_TLS_SE_FAILED **(0x8007)**

ESP_ERR_ESP_TLS_TCP_CLOSED_FIN **(0x8008)**

ESP_ERR_MBEDTLS_CERT_PARTLY_OK **(0x8010)**: mbedtls parse certificates was partly successful

ESP_ERR_MBEDTLS_CTR_DRBG_SEED_FAILED **(0x8011)**: mbedtls api returned error

ESP_ERR_MBEDTLS_SSL_SET_HOSTNAME_FAILED **(0x8012)**: mbedtls api returned error

ESP_ERR_MBEDTLS_SSL_CONFIG_DEFAULTS_FAILED **(0x8013)**: mbedtls api returned error

ESP_ERR_MBEDTLS_SSL_CONF_ALPN_PROTOCOLS_FAILED **(0x8014)**: mbedtls api returned error

ESP_ERR_MBEDTLS_X509_CRT_PARSE_FAILED **(0x8015)**: mbedtls api returned error

ESP_ERR_MBEDTLS_SSL_CONF_OWN_CERT_FAILED **(0x8016)**: mbedtls api returned error

ESP_ERR_MBEDTLS_SSL_SETUP_FAILED **(0x8017)**: mbedtls api returned error

ESP_ERR_MBEDTLS_SSL_WRITE_FAILED **(0x8018)**: mbedtls api returned error

ESP_ERR_MBEDTLS_PK_PARSE_KEY_FAILED **(0x8019)**: mbedtls api returned failed

ESP_ERR_MBEDTLS_SSL_HANDSHAKE_FAILED **(0x801a)**: mbedtls api returned failed

ESP_ERR_MBEDTLS_SSL_CONF_PSK_FAILED **(0x801b)**: mbedtls api returned failed

ESP_ERR_MBEDTLS_SSL_TICKET_SETUP_FAILED **(0x801c)**: mbedtls api returned failed

ESP_ERR_WOLFSSL_SSL_SET_HOSTNAME_FAILED **(0x8031)**: wolfSSL api returned error

ESP_ERR_WOLFSSL_SSL_CONF_ALPN_PROTOCOLS_FAILED **(0x8032)**: wolfSSL api returned error

ESP_ERR_WOLFSSL_CERT_VERIFY_SETUP_FAILED **(0x8033)**: wolfSSL api returned error

ESP_ERR_WOLFSSL_KEY_VERIFY_SETUP_FAILED **(0x8034)**: wolfSSL api returned error

ESP_ERR_WOLFSSL_SSL_HANDSHAKE_FAILED **(0x8035)**: wolfSSL api returned failed

ESP_ERR_WOLFSSL_CTX_SETUP_FAILED **(0x8036)**: wolfSSL api returned failed

ESP_ERR_WOLFSSL_SSL_SETUP_FAILED **(0x8037)**: wolfSSL api returned failed

ESP_ERR_WOLFSSL_SSL_WRITE_FAILED **(0x8038)**: wolfSSL api returned failed

ESP_ERR_HTTPS_OTA_BASE **(0x9000)**

ESP_ERR_HTTPS_OTA_IN_PROGRESS **(0x9001)**

ESP_ERR_PING_BASE **(0xa000)**

ESP_ERR_PING_INVALID_PARAMS **(0xa001)**

ESP_ERR_PING_NO_MEM **(0xa002)**

ESP_ERR_HTTPD_BASE **(0xb000)**: Starting number of HTTPD error codes

ESP_ERR_HTTPD_HANDLERS_FULL **(0xb001)**: All slots for registering URI handlers have been consumed

ESP_ERR_HTTPD_HANDLER_EXISTS **(0xb002)**: URI handler with same method and target URI already registered

ESP_ERR_HTTPD_INVALID_REQ **(0xb003)**: Invalid request pointer

ESP_ERR_HTTPD_RESULT_TRUNC **(0xb004)**: Result string truncated

ESP_ERR_HTTPD_RESP_HDR **(0xb005)**: Response header field larger than supported

ESP_ERR_HTTPD_RESP_SEND **(0xb006)**: Error occured while sending response packet

ESP_ERR_HTTPD_ALLOC_MEM **(0xb007)**: Failed to dynamically allocate memory for resource

ESP_ERR_HTTPD_TASK **(0xb008)**: Failed to launch server task/thread

ESP_ERR_HW_CRYPTO_BASE **(0xc000)**: Starting number of HW cryptography module error codes

ESP_ERR_HW_CRYPTO_DS_HMAC_FAIL **(0xc001)**: HMAC peripheral problem

ESP_ERR_HW_CRYPTO_DS_INVALID_KEY **(0xc002)**

ESP_ERR_HW_CRYPTO_DS_INVALID_DIGEST **(0xc004)**

ESP_ERR_HW_CRYPTO_DS_INVALID_PADDING **(0xc005)**

ESP_ERR_MEMPROT_BASE **(0xd000)**: Starting number of Memory Protection API error codes

ESP_ERR_MEMPROT_MEMORY_TYPE_INVALID **(0xd001)**

ESP_ERR_MEMPROT_SPLIT_ADDR_INVALID **(0xd002)**

ESP_ERR_MEMPROT_SPLIT_ADDR_OUT_OF_RANGE **(0xd003)**

ESP_ERR_MEMPROT_SPLIT_ADDR_UNALIGNED **(0xd004)**

ESP_ERR_MEMPROT_UNIMGMT_BLOCK_INVALID **(0xd005)**

ESP_ERR_MEMPROT_WORLD_INVALID **(0xd006)**

ESP_ERR_MEMPROT_AREA_INVALID **(0xd007)**

Chapter 3

ESP32 Hardware Reference

3.1 Chip Series Comparison

The comparison below covers key features of chips supported by ESP-IDF. For the full list of features please refer to respective datasheets in Section *Related Documents*.

Table 1: Chip Series Comparison

Feature	ESP32 Series	ESP32-S2 Series	ESP32-C3 Series
Launch year	2016	2020	2020
Variants	See ESP32 Datasheet (PDF)	See ESP32-S2 Datasheet (PDF)	See ESP32-C3 Datasheet (PDF)
Core	Xtensa® dual-core 32-bit LX6 with 600 MIPS (in total); 200 MIPS for ESP32-U4WDH/ESP32-S0WD (single-core variants); 400 MIPS for ESP32-D2WD	Xtensa® single-core 32-bit LX7 with 300 MIPS	32-bit single-core RISC-V
Wi-Fi protocols	802.11 b/g/n, 2.4 GHz	802.11 b/g/n, 2.4 GHz	802.11 b/g/n, 2.4 GHz
Bluetooth®	Bluetooth v4.2 BR/EDR and Bluetooth Low Energy	×	Bluetooth 5.0
Typical frequency	240 MHz (160 MHz for ESP32-S0WD, ESP32-D2WD, and ESP32-U4WDH)	240 MHz	160 MHz
SRAM	520 KB	320 KB	400 KB
ROM	448 KB for booting and core functions	128 KB for booting and core functions	384 KB for booting and core functions
Embedded flash	2 MB, 4 MB, or none, depending on variants	2 MB, 4 MB, or none, depending on variants	4 MB or none, depending on variants
External flash	Up to 16 MB device, address 11 MB + 248 KB each time	Up to 1 GB device, address 11.5 MB each time	Up to 16 MB device, address 8 MB each time
External RAM	Up to 8 MB device, address 4 MB each time	Up to 1 GB device, address 11.5 MB each time	×

continues on next page

Table 1 – continued from previous page

Feature	ESP32 Series	ESP32-S2 Series	ESP32-C3 Series
Cache	✓ Two-way set associative	✓ Four-way set associative, independent instruction cache and data cache	✓ Eight-way set associative, 32-bit data/instruction bus width
Peripherals			
ADC	Two 12-bit, 18 channels	Two 13-bit, 20 channels	Two 12-bit SAR ADCs, at most 6 channels
DAC	Two 8-bit channels	Two 8-bit channels	×
Timers	Four 64-bit general-purpose timers, and three watchdog timers	Four 64-bit general-purpose timers, and three watchdog timers	Two 54-bit general-purpose timers, and three watchdog timers
Temperature sensor	×	1	1
Touch sensor	10	14	×
Hall sensor	1	×	×
GPIO	34	43	22
SPI	4	4 with more modes, compared with ESP32	3
LCD interface	1	1	×
UART	3	2 [1]	2 [1]
I2C	2	2	1
I2S	2, can be configured to operate with 8/16/32/40/48-bit resolution as an input or output channel.	1, can be configured to operate with 8/16/24/32/48/64-bit resolution as an input or output channel.	1, can be configured to operate with 8/16/24/32-bit resolution as an input or output channel.
Camera interface	1	1	×
DMA	Dedicated DMA to UART, SPI, I2S, SDIO slave, SD/MMC host, EMAC, BT, and Wi-Fi	Dedicated DMA to UART, SPI, AES, SHA, I2S, and ADC Controller	General-purpose, 3 TX channels, 3 RX channels
RMT	8 channels	4 channels [1], can be configured to TX/RX channels	4 channels [2], 2 TX channels, 2 RX channels
Pulse counter	8 channels	4 channels [1]	×
LED PWM	16 channels	8 channels [1]	6 channels [2]
MCPWM	2, six PWM outputs	×	×
USB OTG	×	1	×
TWAI® controller (compatible with ISO 11898-1)	1	1	1
SD/SDIO/MMC host controller	1	×	×
SDIO slave controller	1	×	×
Ethernet MAC	1	×	×
ULP	ULP FSM	PicoRV32 core with 8 KB SRAM, ULP FSM with more instructions	×
Debug Assist	×	×	1

continues on next page

Table 1 – continued from previous page

Feature	ESP32 Series	ESP32-S2 Series	ESP32-C3 Series
Security			
Secure boot	✓	✓ Faster and safer, compared with ESP32	✓ Faster and safer, compared with ESP32
Flash encryption	✓	✓ Support for PSRAM encryption. Safer, compared with ESP32	✓ Safer, compared with ESP32
OTP	1024-bit	4096-bit	4096-bit
AES	✓ AES-128, AES-192, AES-256 (FIPS PUB 197)	✓ AES-128, AES-192, AES-256 (FIPS PUB 197)	✓ AES-128, AES-256 (FIPS PUB 197)
HASH	SHA-1, SHA-256, SHA-384, SHA-512 (FIPS PUB 180-4)	SHA-1, SHA-224, SHA-256, SHA-384, SHA-512, SHA-512/224, SHA-512/256, SHA-512/t (FIPS PUB 180-4); DMA support	SHA-1, SHA-224, SHA-256 (FIPS PUB 180-4)
RSA	Up to 4096 bits	Up to 4096 bits, improved acceleration options compared with ESP32	Up to 3072 bits
RNG	✓	✓	✓
HMAC	×	✓	✓
Digital signature	×	✓	✓
XTS	×	✓ XTS-AES-128, XTS-AES-256	✓ XTS-AES-128
Other			
Deep-sleep (ULP sensor-monitored pattern)	100 µA (when ADC work with a duty cycle of 1%)	22 µA (when touch sensors work with a duty cycle of 1%)	No such pattern
Size	QFN48 5*5, 6*6, depending on variants	QFN56 7*7	QFN32 5*5

Note 1: Reduced chip area compared with ESP32

Note 2: Reduced chip area compared with ESP32 and ESP32-S2

Note 3: Die size: ESP32-C3 < ESP32-S2 < ESP32

3.1.1 Related Documents

- ESP32 Datasheet (PDF)
- ESP32-PICO Datasheets (PDF)
  - ESP32-PICO-D4
  - ESP32-PICO-V3
  - ESP32-PICO-V3-02
- ESP32-S2 Datasheet (PDF)
- ESP32-C3 Datasheet (PDF)
- ESP Product Selector

Chapter 4

API Guides

4.1 Application Level Tracing library

4.1.1 Overview

IDF provides useful feature for program behavior analysis: application level tracing. It is implemented in the corresponding library and can be enabled in menuconfig. This feature allows to transfer arbitrary data between host and ESP32 via JTAG interface with small overhead on program execution.

Developers can use this library to send application specific state of execution to the host and receive commands or other type of info in the opposite direction at runtime. The main use cases of this library are:

1. Collecting application specific data, see *Application Specific Tracing*
2. Lightweight logging to the host, see *Logging to Host*
3. System behavior analysis, see *System Behavior Analysis with SEGGER SystemView*
4. Source code coverage, see *Gcov (Source Code Coverage)*

Tracing components when working over JTAG interface are shown in the figure below.

4.1.2 Modes of Operation

The library supports two modes of operation:

Post-mortem mode. This is the default mode. The mode does not need interaction with the host side. In this mode tracing module does not check whether host has read all the data from *HW UP BUFFER* buffer and overwrites old data with the new ones. This mode is useful when only the latest trace data are interesting to the user, e.g. for analyzing program' s behavior just before the crash. Host can read the data later on upon user request, e.g. via special OpenOCD command in case of working via JTAG interface.

Streaming mode. Tracing module enters this mode when host connects to ESP32. In this mode before writing new data to *HW UP BUFFER* tracing module checks that there is enough space in it and if necessary waits for the host to read data and free enough memory. Maximum waiting time is controlled via timeout values passed by users to corresponding API routines. So when application tries to write data to trace buffer using finite value of the maximum waiting time it is possible situation that this data will be dropped. Especially this is true for tracing from time critical code (ISRs, OS scheduler code etc.) when infinite timeouts can lead to system malfunction. In order to avoid loss of such critical data developers can enable additional data buffering via menuconfig option *CONFIG_APPTRACE_PENDING_DATA_SIZE_MAX*. This macro specifies the size of data which can be buffered in above conditions. The option can also help to overcome situation when data transfer to the host is temporarily slowed

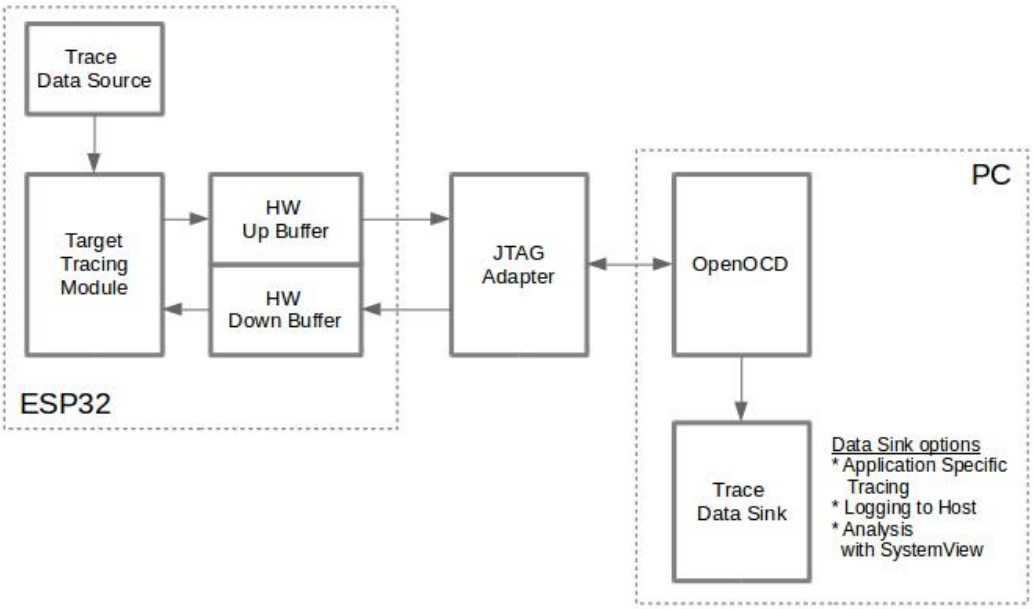

Fig. 1: Tracing Components when Working Over JTAG

down, e.g due to USB bus congestions etc. But it will not help when average bitrate of trace data stream exceeds HW interface capabilities.

4.1.3 Configuration Options and Dependencies

Using of this feature depends on two components:

1. **Host side:** Application tracing is done over JTAG, so it needs OpenOCD to be set up and running on host machine. For instructions on how to set it up, please see *JTAG Debugging* for details.
2. **Target side:** Application tracing functionality can be enabled in menuconfig. *Component config* > *Application Level Tracing* menu allows selecting destination for the trace data (HW interface for transport). Choosing any of the destinations automatically enables `CONFIG_APPTRACE_ENABLE` option.

Note: In order to achieve higher data rates and minimize number of dropped packets it is recommended to optimize setting of JTAG clock frequency, so it is at maximum and still provides stable operation of JTAG, see *Optimize JTAG speed*.

There are two additional menuconfig options not mentioned above:

1. *Threshold for flushing last trace data to host on panic* (*CONFIG_APPTRACE_POSTMORTEM_FLUSH_THRESH*). This option is necessary due to the nature of working over JTAG. In that mode trace data are exposed to the host in 16 KB blocks. In post-mortem mode when one block is filled it is exposed to the host and the previous one becomes unavailable. In other words trace data are overwritten in 16 KB granularity. On panic the latest data from the current input block are exposed to host and host can read them for post-analysis. System panic may occur when very small amount of data are not exposed to the host yet. In this case the previous 16 KB of collected data will be lost and host will see the latest, but very small piece of the trace. It can be insufficient to diagnose the problem. This menuconfig option allows avoiding such situations. It controls the threshold for flushing data in case of panic. For example user can decide that it needs not less then 512 bytes of the recent trace data, so if there is less then 512 bytes of pending data at the moment of panic they will not be

flushed and will not overwrite previous 16 KB. The option is only meaningful in post-mortem mode and when working over JTAG.
2. *Timeout for flushing last trace data to host on panic* (*CONFIG_APPTRACE_ONPANIC_HOST_FLUSH_TMO*). The option is only meaningful in streaming mode and controls the maximum time tracing module will wait for the host to read the last data in case of panic.

4.1.4 How to use this library

This library provides API for transferring arbitrary data between host and ESP32. When enabled in menuconfig target application tracing module is initialized automatically at the system startup, so all what the user needs to do is to call corresponding API to send, receive or flush the data.

Application Specific Tracing

In general user should decide what type of data should be transferred in every direction and how these data must be interpreted (processed). The following steps must be performed to transfer data between target and host:

1. On target side user should implement algorithms for writing trace data to the host. Piece of code below shows an example how to do this.

```
#include "esp_app_trace.h"
...
char buf[] = "Hello World!";
esp_err_t res = esp_apptrace_write(ESP_APPTRACE_DEST_TRAX, buf, strlen(buf),␣
↪ESP_APPTRACE_TMO_INFINITE);
if (res != ESP_OK) {
    ESP_LOGE(TAG, "Failed to write data to host!");
    return res;
}
```

`esp_apptrace_write()` function uses memcpy to copy user data to the internal buffer. In some cases it can be more optimal to use `esp_apptrace_buffer_get()` and `esp_apptrace_buffer_put()` functions. They allow developers to allocate buffer and fill it themselves. The following piece of code shows how to do this.

```
#include "esp_app_trace.h"
...
int number = 10;
char *ptr = (char *)esp_apptrace_buffer_get(ESP_APPTRACE_DEST_TRAX, 32, 100/
↪*tmo in us*/);
if (ptr == NULL) {
    ESP_LOGE(TAG, "Failed to get buffer!");
    return ESP_FAIL;
}
sprintf(ptr, "Here is the number %d", number);
esp_err_t res = esp_apptrace_buffer_put(ESP_APPTRACE_DEST_TRAX, ptr, 100/*tmo␣
↪in us*/);
if (res != ESP_OK) {
    /* in case of error host tracing tool (e.g. OpenOCD) will report␣
↪incomplete user buffer */
    ESP_LOGE(TAG, "Failed to put buffer!");
    return res;
}
```

Also according to his needs user may want to receive data from the host. Piece of code below shows an example how to do this.

```
#include "esp_app_trace.h"
...
char buf[32];
```

(continues on next page)

(continued from previous page)

```
char down_buf[32];
size_t sz = sizeof(buf);

/* config down buffer */
esp_apptrace_down_buffer_config(down_buf, sizeof(down_buf));
/* check for incoming data and read them if any */
esp_err_t res = esp_apptrace_read(ESP_APPTRACE_DEST_TRAX, buf, &sz, 0/*do not␣
↪wait*/);
if (res != ESP_OK) {
    ESP_LOGE(TAG, "Failed to read data from host!");
    return res;
}
if (sz > 0) {
    /* we have data, process them */
    ...
}
```

`esp_apptrace_read()` function uses memcpy to copy host data to user buffer. In some cases it can be more optimal to use `esp_apptrace_down_buffer_get()` and `esp_apptrace_down_buffer_put()` functions. They allow developers to occupy chunk of read buffer and process it in-place. The following piece of code shows how to do this.

```
#include "esp_app_trace.h"
...
char down_buf[32];
uint32_t *number;
size_t sz = 32;

/* config down buffer */
esp_apptrace_down_buffer_config(down_buf, sizeof(down_buf));
char *ptr = (char *)esp_apptrace_down_buffer_get(ESP_APPTRACE_DEST_TRAX, &sz,␣
↪100/*tmo in us*/);
if (ptr == NULL) {
    ESP_LOGE(TAG, "Failed to get buffer!");
    return ESP_FAIL;
}
if (sz > 4) {
    number = (uint32_t *)ptr;
    printf("Here is the number %d", *number);
} else {
    printf("No data");
}
esp_err_t res = esp_apptrace_down_buffer_put(ESP_APPTRACE_DEST_TRAX, ptr, 100/
↪*tmo in us*/);
if (res != ESP_OK) {
    /* in case of error host tracing tool (e.g. OpenOCD) will report␣
↪incomplete user buffer */
    ESP_LOGE(TAG, "Failed to put buffer!");
    return res;
}
```

2. The next step is to build the program image and download it to the target as described in the *Getting Started Guide*.
3. Run OpenOCD (see *JTAG Debugging*).
4. Connect to OpenOCD telnet server. It can be done using the following command in terminal `telnet <oocd_host> 4444`. If telnet session is opened on the same machine which runs OpenOCD you can use `localhost` as `<oocd_host>` in the command above.
5. Start trace data collection using special OpenOCD command. This command will transfer tracing data and redirect them to specified file or socket (currently only files are supported as trace data destination). For description of the corresponding commands see *OpenOCD Application Level Tracing Commands*.
6. The final step is to process received data. Since format of data is defined by user the processing stage is out of the scope of this document. Good starting points for data processor are python scripts in `$IDF_PATH/`

`tools/esp_app_trace`: `apptrace_proc.py` (used for feature tests) and `logtrace_proc.py` (see more details in section *Logging to Host*).

OpenOCD Application Level Tracing Commands *HW UP BUFFER* is shared between user data blocks and filling of the allocated memory is performed on behalf of the API caller (in task or ISR context). In multithreading environment it can happen that task/ISR which fills the buffer is preempted by another high priority task/ISR. So it is possible situation that user data preparation process is not completed at the moment when that chunk is read by the host. To handle such conditions tracing module prepends all user data chunks with header which contains allocated user buffer size (2 bytes) and length of actually written data (2 bytes). So total length of the header is 4 bytes. OpenOCD command which reads trace data reports error when it reads incomplete user data chunk, but in any case it puts contents of the whole user chunk (including unfilled area) to output file.

Below is the description of available OpenOCD application tracing commands.

Note: Currently OpenOCD does not provide commands to send arbitrary user data to the target.

Command usage:

```
esp apptrace [start <options>] | [stop] | [status] | [dump <cores_num> <outfile>]
```

Sub-commands:

`start` Start tracing (continuous streaming).
`stop` Stop tracing.
`status` Get tracing status.
`dump` Dump all data from (post-mortem dump).

Start command syntax:

```
start <outfile> [poll_period [trace_size [stop_tmo [wait4halt [skip_size]]]]
```

`outfile` Path to file to save data from both CPUs. This argument should have the following format: `file://path/to/file`.
`poll_period` Data polling period (in ms) for available trace data. If greater than 0 then command runs in non-blocking mode. By default 1 ms.
`trace_size` Maximum size of data to collect (in bytes). Tracing is stopped after specified amount of data is received. By default -1 (trace size stop trigger is disabled).
`stop_tmo` Idle timeout (in sec). Tracing is stopped if there is no data for specified period of time. By default -1 (disable this stop trigger). Optionally set it to value longer than longest pause between tracing commands from target.
`wait4halt` If 0 start tracing immediately, otherwise command waits for the target to be halted (after reset, by breakpoint etc.) and then automatically resumes it and starts tracing. By default 0.
`skip_size` Number of bytes to skip at the start. By default 0.

Note: If `poll_period` is 0, OpenOCD telnet command line will not be available until tracing is stopped. You must stop it manually by resetting the board or pressing Ctrl+C in OpenOCD window (not one with the telnet session). Another option is to set `trace_size` and wait until this size of data is collected. At this point tracing stops automatically.

Command usage examples:

1. Collect 2048 bytes of tracing data to a file "trace.log". The file will be saved in "openocd-esp32" directory.

   ```
   esp apptrace start file://trace.log 1 2048 5 0 0
   ```

   The tracing data will be retrieved and saved in non-blocking mode. This process will stop automatically after 2048 bytes are collected, or if no data are available for more than 5 seconds.

Note: Tracing data is buffered before it is made available to OpenOCD. If you see "Data timeout!" message, then the target is likely sending not enough data to empty the buffer to OpenOCD before expiration of timeout. Either increase the timeout or use a function `esp_apptrace_flush()` to flush the data on specific intervals.

2. Retrieve tracing data indefinitely in non-blocking mode.

```
esp apptrace start file://trace.log 1 -1 -1 0 0
```

There is no limitation on the size of collected data and there is no any data timeout set. This process may be stopped by issuing `esp apptrace stop` command on OpenOCD telnet prompt, or by pressing Ctrl+C in OpenOCD window.

3. Retrieve tracing data and save them indefinitely.

```
esp apptrace start file://trace.log 0 -1 -1 0 0
```

OpenOCD telnet command line prompt will not be available until tracing is stopped. To stop tracing press Ctrl+C in OpenOCD window.

4. Wait for target to be halted. Then resume target's operation and start data retrieval. Stop after collecting 2048 bytes of data:

```
esp apptrace start file://trace.log 0 2048 -1 1 0
```

To configure tracing immediately after reset use the openocd `reset halt` command.

Logging to Host

IDF implements useful feature: logging to host via application level tracing library. This is a kind of semihosting when all *ESP_LOGx* calls send strings to be printed to the host instead of UART. This can be useful because "printing to host" eliminates some steps performed when logging to UART. The most part of work is done on the host.

By default IDF's logging library uses vprintf-like function to write formatted output to dedicated UART. In general it involves the following steps:

1. Format string is parsed to obtain type of each argument.
2. According to its type every argument is converted to string representation.
3. Format string combined with converted arguments is sent to UART.

Though implementation of vprintf-like function can be optimized to a certain level, all steps above have to be performed in any case and every step takes some time (especially item 3). So it frequently occurs that with additional log added to the program to identify the problem, the program behavior is changed and the problem cannot be reproduced or in the worst cases the program cannot work normally at all and ends up with an error or even hangs.

Possible ways to overcome this problem are to use higher UART bitrates (or another faster interface) and/or move string formatting procedure to the host.

Application level tracing feature can be used to transfer log information to host using `esp_apptrace_vprintf` function. This function does not perform full parsing of the format string and arguments, instead it just calculates number of arguments passed and sends them along with the format string address to the host. On the host log data are processed and printed out by a special Python script.

Limitations Current implementation of logging over JTAG has some limitations:

1. Tracing from `ESP_EARLY_LOGx` macros is not supported.
2. No support for printf arguments which size exceeds 4 bytes (e.g. `double` and `uint64_t`).
3. Only strings from .rodata section are supported as format strings and arguments.
4. Maximum number of printf arguments is 256.

How To Use It In order to use logging via trace module user needs to perform the following steps:

1. On target side special vprintf-like function needs to be installed. As it was mentioned earlier this function is `esp_apptrace_vprintf`. It sends log data to the host. Example code is provided in system/app_trace_to_host.
2. Follow instructions in items 2-5 in *Application Specific Tracing*.
3. To print out collected log records, run the following command in terminal: `$IDF_PATH/tools/esp_app_trace/logtrace_proc.py /path/to/trace/file /path/to/program/elf/file`.

Log Trace Processor Command Options Command usage:

```
logtrace_proc.py [-h] [--no-errors] <trace_file> <elf_file>
```

Positional arguments:

`trace_file` Path to log trace file
`elf_file` Path to program ELF file

Optional arguments:

`-h, --help` show this help message and exit
`--no-errors, -n` Do not print errors

System Behavior Analysis with SEGGER SystemView

Another useful IDF feature built on top of application tracing library is the system level tracing which produces traces compatible with SEGGER SystemView tool (see SystemView). SEGGER SystemView is a real-time recording and visualization tool that allows to analyze runtime behavior of an application.

Note: Currently IDF-based application is able to generate SystemView compatible traces in form of files to be opened in SystemView application. The tracing process cannot yet be controlled using that tool.

How To Use It Support for this feature is enabled by *Component config* > *Application Level Tracing* > *FreeRTOS SystemView Tracing* (*CONFIG_APPTRACE_SV_ENABLE*) menuconfig option. There are several other options enabled under the same menu:

1. ESP32 timer to use as SystemView timestamp source: (*CONFIG_APPTRACE_SV_TS_SOURCE*) selects the source of timestamps for SystemView events. In single core mode timestamps are generated using ESP32 internal cycle counter running at maximum 240 Mhz (~4 ns granularity). In dual-core mode external timer working at 40 Mhz is used, so timestamp granularity is 25 ns.
2. Individually enabled or disabled collection of SystemView events (`CONFIG_APPTRACE_SV_EVT_XXX`):
   - Trace Buffer Overflow Event
   - ISR Enter Event
   - ISR Exit Event
   - ISR Exit to Scheduler Event
   - Task Start Execution Event
   - Task Stop Execution Event
   - Task Start Ready State Event
   - Task Stop Ready State Event
   - Task Create Event
   - Task Terminate Event
   - System Idle Event
   - Timer Enter Event
   - Timer Exit Event

IDF has all the code required to produce SystemView compatible traces, so user can just configure necessary project options (see above), build, download the image to target and use OpenOCD to collect data as described in the previous sections.

OpenOCD SystemView Tracing Command Options Command usage:

```
esp sysview [start <options>] | [stop] | [status]
```

Sub-commands:

start Start tracing (continuous streaming).
stop Stop tracing.
status Get tracing status.

Start command syntax:

```
start <outfile1> [outfile2] [poll_period [trace_size [stop_tmo]]]
```

outfile1 Path to file to save data from PRO CPU. This argument should have the following format: `file://path/to/file`.
outfile2 Path to file to save data from APP CPU. This argument should have the following format: `file://path/to/file`.
poll_period Data polling period (in ms) for available trace data. If greater then 0 then command runs in non-blocking mode. By default 1 ms.
trace_size Maximum size of data to collect (in bytes). Tracing is stopped after specified amount of data is received. By default -1 (trace size stop trigger is disabled).
stop_tmo Idle timeout (in sec). Tracing is stopped if there is no data for specified period of time. By default -1 (disable this stop trigger).

Note: If `poll_period` is 0 OpenOCD telnet command line will not be available until tracing is stopped. You must stop it manually by resetting the board or pressing Ctrl+C in OpenOCD window (not one with the telnet session). Another option is to set `trace_size` and wait until this size of data is collected. At this point tracing stops automatically.

Command usage examples:

1. Collect SystemView tracing data to files "pro-cpu.SVDat" and "app-cpu.SVDat". The files will be saved in "openocd-esp32" directory.

   ```
   esp sysview start file://pro-cpu.SVDat file://app-cpu.SVDat
   ```

   The tracing data will be retrieved and saved in non-blocking mode. To stop data this process enter `esp sysview stop` command on OpenOCD telnet prompt, optionally pressing Ctrl+C in OpenOCD window.
2. Retrieve tracing data and save them indefinitely.

   ```
   esp sysview start file://pro-cpu.SVDat file://app-cpu.SVDat 0 -1 -1
   ```

   OpenOCD telnet command line prompt will not be available until tracing is stopped. To stop tracing, press Ctrl+C in OpenOCD window.

Data Visualization After trace data are collected user can use special tool to visualize the results and inspect behavior of the program.

Unfortunately SystemView does not support tracing from multiple cores. So when tracing from ESP32 working in dual-core mode two files are generated: one for PRO CPU and another one for APP CPU. User can load every file into separate instance of the tool.

It is uneasy and awkward to analyze data for every core in separate instance of the tool. Fortunately there is Eclipse plugin called *Impulse* which can load several trace files and makes it possible to inspect events from both cores in one view. Also this plugin has no limitation of 1,000,000 events as compared to free version of SystemView.

Good instruction on how to install, configure and visualize data in Impulse from one core can be found here.

Note: IDF uses its own mapping for SystemView FreeRTOS events IDs, so user needs to replace original file with mapping `$SYSVIEW_INSTALL_DIR/Description/SYSVIEW_FreeRTOS.txt` with

`$IDF_PATH/docs/api-guides/SYSVIEW_FreeRTOS.txt`. Also contents of that IDF specific file should be used when configuring SystemView serializer using above link.

Configure Impulse for Dual Core Traces After installing Impulse and ensuring that it can successfully load trace files for each core in separate tabs, users can add special Multi Adapter port and load both files into one view. To do this, users need to do the following in Eclipse:

1. Open 'Signal Ports' view. Go to Windows->Show View->Other menu. Find 'Signal Ports' view in Impulse folder and double-click on it.
2. In 'Signal Ports' view right-click on 'Ports' and select 'Add ...' ->New Multi Adapter Port
3. In open dialog Press 'Add' button and select 'New Pipe/File'.
4. In open dialog select 'SystemView Serializer' as Serializer and set path to PRO CPU trace file. Press OK.
5. Repeat steps 3-4 for APP CPU trace file.
6. Double-click on created port. View for this port should open.
7. Click Start/Stop Streaming button. Data should be loaded.
8. Use 'Zoom Out', 'Zoom In' and 'Zoom Fit' button to inspect data.
9. For settings measurement cursors and other features please see Impulse documentation).

Note: If you have problems with visualization (no data are shown or strange behavior of zoom action is observed) you can try to delete current signal hierarchy and double click on the necessary file or port. Eclipse will ask you to create new signal hierarchy.

Gcov (Source Code Coverage)

Basics of Gcov and Gcovr Source code coverage is data indicating the count and frequency of every program execution path that has been taken within a program's runtime. Gcov is a GCC tool that, when used in concert with the compiler, can generate log files indicating the execution count of each line of a source file. The Gcovr tool is utility for managing Gcov and generating summarized code coverage results.

Generally, using Gcov to compile and run programs on the Host will undergo these steps:

1. Compile the source code using GCC with the `--coverage` option enabled. This will cause the compiler to generate a `.gcno` notes files during compilation. The notes files contain information to reconstruct execution path block graphs and map each block to source code line numbers. Each source file compiled with the `--coverage` option should have their own `.gcno` file of the same name (e.g., a `main.c` will generate a `main.gcno` when compiled).
2. Execute the program. During execution, the program should generate `.gcda` data files. These data files contain the counts of the number of times an execution path was taken. The program will generate a `.gcda` file for each source file compiled with the `--coverage` option (e.g., `main.c` will generate a `main.gcda`.
3. Gcov or Gcovr can be used generate a code coverage based on the `.gcno`, `.gcda`, and source files. Gcov will generate a text based coverage report for each source file in the form of a `.gcov` file, whilst Gcovr will generate a coverage report in HTML format.

Gcov and Gcovr in ESP-IDF Using Gcov in ESP-IDF is complicated by the fact that the program is running remotely from the Host (i.e., on the target). The code coverage data (i.e., the `.gcda` files) is initially stored on the target itself. OpenOCD is then used to dump the code coverage data from the target to the host via JTAG during runtime. Using Gcov in ESP-IDF can be split into the following steps.

1. *Setting Up a Project for Gcov*
2. *Dumping Code Coverage Data*
3. *Generating Coverage Report*

Setting Up a Project for Gcov

Compiler Option In order to obtain code coverage data in a project, one or more source files within the project must be compiled with the `--coverage` option. In ESP-IDF, this can be achieved at the component level or the individual source file level:

To cause all source files in a component to be compiled with the `--coverage` option.

- Add `target_compile_options(${COMPONENT_LIB} PRIVATE --coverage)` to the `CMakeLists.txt` file of the component if using CMake.
- Add `CFLAGS += --coverage` to the `component.mk` file of the component if using Make.

To cause a select number of source files (e.g. `sourec1.c` and `source2.c`) in the same component to be compiled with the

- Add `set_source_files_properties(source1.c source2.c PROPERTIES COMPILE_FLAGS --coverage)` to the `CMakeLists.txt` file of the component if using CMake.
- Add `source1.o: CFLAGS += --coverage` and `source2.o: CFLAGS += --coverage` to the `component.mk` file of the component if using Make.

When a source file is compiled with the `--coverage` option (e.g. `gcov_example.c`), the compiler will generate the `gcov_example.gcno` file in the project's build directory.

Project Configuration Before building a project with source code coverage, ensure that the following project configuration options are enabled by running `idf.py menuconfig` (or `make menuconfig` if using the legacy Make build system).

- Enable the application tracing module by choosing *Trace Memory* for the *CONFIG_APPTRACE_DESTINATION* option.
- Enable Gcov to host via the *CONFIG_APPTRACE_GCOV_ENABLE*

Dumping Code Coverage Data Once a project has been complied with the `--coverage` option and flashed onto the target, code coverage data will be stored internally on the target (i.e., in trace memory) whilst the application runs. The process of transferring code coverage data from the target to the Host is know as dumping.

The dumping of coverage data is done via OpenOCD (see *JTAG Debugging* on how to setup and run OpenOCD). A dump is triggered by issuing commands to OpenOCD, therefore a telnet session to OpenOCD must be opened to issue such commands (run `telnet localhost 4444`). Note that GDB could be used instead of telnet to issue commands to OpenOCD, however all commands issued from GDB will need to be prefixed as `mon <oocd_command>`.

When the target dumps code coverage data, the `.gcda` files are stored in the project's build directory. For example, if `gcov_example_main.c` of the `main` component was compiled with the `--coverage` option, then dumping the code coverage data would generate a `gcov_example_main.gcda` in `build/esp-idf/main/CMakeFiles/__idf_main.dir/gcov_example_main.c.gcda` (or `build/main/gcov_example_main.gcda` if using the legacy Make build system). Note that the `.gcno` files produced during compilation are also placed in the same directory.

The dumping of code coverage data can be done multiple times throughout an application's life time. Each dump will simply update the `.gcda` file with the newest code coverage information. Code coverage data is accumulative, thus the newest data will contain the total execution count of each code path over the application's entire lifetime.

ESP-IDF supports two methods of dumping code coverage data form the target to the host:

- Instant Run-Time Dumpgit
- Hard-coded Dump

Instant Run-Time Dump An Instant Run-Time Dump is triggered by calling the `ESP32 gcov` OpenOCD command (via a telnet session). Once called, OpenOCD will immediately preempt the ESP32's current state and execute a builtin IDF Gcov debug stub function. The debug stub function will handle the dumping of data to the Host. Upon completion, the ESP32 will resume it's current state.

Hard-coded Dump A Hard-coded Dump is triggered by the application itself by calling *`esp_gcov_dump()`* from somewhere within the application. When called, the application will halt and wait for OpenOCD to connect and retrieve the code coverage data. Once *`esp_gcov_dump()`* is called, the Host must execute the `esp gcov dump`

OpenOCD command (via a telnet session). The `esp gcov dump` command will cause OpenOCD to connect to the ESP32, retrieve the code coverage data, then disconnect from the ESP32 thus allowing the application to resume. Hard-coded Dumps can also be triggered multiple times throughout an application's lifetime.

Hard-coded dumps are useful if code coverage data is required at certain points of an application's lifetime by placing *`esp_gcov_dump()`* where necessary (e.g., after application initialization, during each iteration of an application's main loop).

GDB can be used to set a breakpoint on *`esp_gcov_dump()`*, then call `mon esp gcov dump` automatically via the use a `gdbinit` script (see Using GDB from *Command Line*).

The following GDB script is will add a breakpoint at *`esp_gcov_dump()`*, then call the `mon esp gcov dump` OpenOCD command.

```
b esp_gcov_dump
commands
mon esp gcov dump
end
```

Note: Note that all OpenOCD commands should be invoked in GDB as: `mon <oocd_command>`.

Generating Coverage Report Once the code coverage data has been dumped, the `.gcno`, `.gcda` and the source files can be used to generate a code coverage report. A code coverage report is simply a report indicating the number of times each line in a source file has been executed.

Both Gcov and Gcovr can be used to generate code coverage reports. Gcov is provided along with the Xtensa toolchain, whilst Gcovr may need to be installed separately. For details on how to use Gcov or Gcovr, refer to Gcov documentation and Gcovr documentation.

Adding Gcovr Build Target to Project To make report generation more convenient, users can define additional build targets in their projects such report generation can be done with a single build command.

CMake Build System For the CMake build systems, add the following lines to the `CMakeLists.txt` file of your project.

```
include($ENV{IDF_PATH}/tools/cmake/gcov.cmake)
idf_create_coverage_report(${CMAKE_CURRENT_BINARY_DIR}/coverage_report)
idf_clean_coverage_report(${CMAKE_CURRENT_BINARY_DIR}/coverage_report)
```

The following commands can now be used:

- `cmake --build build/ --target gcovr-report` will generate an HTML coverage report in `$(BUILD_DIR_BASE)/coverage_report/html` directory.
- `cmake --build build/ --target cov-data-clean` will remove all coverage data files.

Make Build System For the Make build systems, add the following lines to the `Makefile` of your project.

```
GCOV := $(call dequote,$(CONFIG_SDK_TOOLPREFIX))gcov
REPORT_DIR := $(BUILD_DIR_BASE)/coverage_report

gcovr-report:
    echo "Generating coverage report in: $(REPORT_DIR)"
    echo "Using gcov: $(GCOV)"
    mkdir -p $(REPORT_DIR)/html
    cd $(BUILD_DIR_BASE)
    gcovr -r $(PROJECT_PATH) --gcov-executable $(GCOV) -s --html-details $(REPORT_
↪DIR)/html/index.html
```

(continues on next page)

(continued from previous page)

```
cov-data-clean:
    echo "Remove coverage data files..."
    find $(BUILD_DIR_BASE) -name "*.gcda" -exec rm {} +
    rm -rf $(REPORT_DIR)

.PHONY: gcovr-report cov-data-clean
```

The following commands can now be used:

- `make gcovr-report` will generate an HTML coverage report in `$(BUILD_DIR_BASE)/coverage_report/html` directory.
- `make cov-data-clean` will remove all coverage data files.

4.2 Application Startup Flow

This note explains various steps which happen before `app_main` function of an ESP-IDF application is called.

The high level view of startup process is as follows:

1. *First stage bootloader* in ROM loads second-stage bootloader image to RAM (IRAM & DRAM) from flash offset 0x1000.
2. *Second stage bootloader* loads partition table and main app image from flash. Main app incorporates both RAM segments and read-only segments mapped via flash cache.
3. *Application startup* executes. At this point the second CPU and RTOS scheduler are started.

This process is explained in detail in the following sections.

4.2.1 First stage bootloader

After SoC reset, PRO CPU will start running immediately, executing reset vector code, while APP CPU will be held in reset. During startup process, PRO CPU does all the initialization. APP CPU reset is de-asserted in the `call_start_cpu0` function of application startup code. Reset vector code is located in the mask ROM of the ESP32 chip and cannot be modified.

Startup code called from the reset vector determines the boot mode by checking `GPIO_STRAP_REG` register for bootstrap pin states. Depending on the reset reason, the following takes place:

1. Reset from deep sleep: if the value in `RTC_CNTL_STORE6_REG` is non-zero, and CRC value of RTC memory in `RTC_CNTL_STORE7_REG` is valid, use `RTC_CNTL_STORE6_REG` as an entry point address and jump immediately to it. If `RTC_CNTL_STORE6_REG` is zero, or `RTC_CNTL_STORE7_REG` contains invalid CRC, or once the code called via `RTC_CNTL_STORE6_REG` returns, proceed with boot as if it was a power-on reset. **Note**: to run customized code at this point, a deep sleep stub mechanism is provided. Please see *deep sleep* documentation for this.
2. For power-on reset, software SOC reset, and watchdog SOC reset: check the `GPIO_STRAP_REG` register if a custom boot mode (such as UART Download Mode) is requested. If this is the case, this custom loader mode is executed from ROM. Otherwise, proceed with boot as if it was due to software CPU reset. Consult ESP32 datasheet for a description of SoC boot modes and how to execute them.
3. For software CPU reset and watchdog CPU reset: configure SPI flash based on EFUSE values, and attempt to load the code from flash. This step is described in more detail in the next paragraphs.

Note: During normal boot modes the RTC watchdog is enabled when this happens, so if the process is interrupted or stalled then the watchdog will reset the SOC automatically and repeat the boot process. This may cause the SoC to strap into a new boot mode, if the strapping GPIOs have changed.

Second stage bootloader binary image is loaded from flash starting at address 0x1000. If *Secure Boot* is in use then the first 4 kB sector of flash is used to store secure boot IV and digest of the bootloader image. Otherwise, this sector is unused.

4.2.2 Second stage bootloader

In ESP-IDF, the binary image which resides at offset 0x1000 in flash is the second stage bootloader. Second stage bootloader source code is available in components/bootloader directory of ESP-IDF. Second stage bootloader is used in ESP-IDF to add flexibility to flash layout (using partition tables), and allow for various flows associated with flash encryption, secure boot, and over-the-air updates (OTA) to take place.

When the first stage bootloader is finished checking and loading the second stage bootloader, it jumps to the second stage bootloader entry point found in the binary image header.

Second stage bootloader reads the partition table found by default at offset 0x8000 (*configurable value*). See *partition tables* documentation for more information. The bootloader finds factory and OTA app partitions. If OTA app partitions are found in the partition table, the bootloader consults the `otadata` partition to determine which one should be booted. See *Over The Air Updates (OTA)* for more information.

For a full description of the configuration options available for the ESP-IDF bootloader, see *Bootloader*.

For the selected partition, second stage bootloader reads the binary image from flash one segment at a time:

- For segments with load addresses in internal *IRAM (Instruction RAM)* or *DRAM (Data RAM)*, the contents are copied from flash to the load address.
- For segments which have load addresses in *DROM (data stored in Flash)* or *IROM (code executed from Flash)* regions, the flash MMU is configured to provide the correct mapping from the flash to the load address.

Note that the second stage bootloader configures flash MMU for both PRO and APP CPUs, but it only enables flash MMU for PRO CPU. Reason for this is that second stage bootloader code is loaded into the memory region used by APP CPU cache. The duty of enabling cache for APP CPU is passed on to the application.

Once all segments are processed - meaning code is loaded and flash MMU is set up, second stage bootloader verifies the integrity of the application and then jumps to the application entry point found in the binary image header.

4.2.3 Application startup

Application startup covers everything that happens after the app starts executing and before the `app_main` function starts running inside the main task. This is split into three stages:

- Port initialization of hardware and basic C runtime environment.
- System initialization of software services and FreeRTOS.
- Running the main task and calling `app_main`.

Note: Understanding all stages of ESP-IDF app initialization is often not necessary. To understand initialization from the application developer's perspective only, skip forward to *Running the main task*.

Port Initialization

ESP-IDF application entry point is `call_start_cpu0` function found in components/esp_system/port/cpu_start.c. This function is executed by the second stage bootloader, and never returns.

This port-layer initialization function initializes the basic C Runtime Environment ("CRT") and performs initial configuration of the SoC's internal hardware:

- Reconfigure CPU exceptions for the app (allowing app interrupt handlers to run, and causing *Fatal Errors* to be handled using the options configured for the app rather than the simpler error handler provided by ROM).

- If the option *CONFIG_BOOTLOADER_WDT_ENABLE* is not set then the RTC watchdog timer is disabled.
- Initialize internal memory (data & bss).
- Finish configuring the MMU cache.
- Enable PSRAM if configured.
- Set the CPU clocks to the frequencies configured for the project.
- Reconfigure the main SPI flash based on the app header settings (necessary for compatibility with bootloader versions before ESP-IDF V4.0, see *Bootloader compatibility*).
- If the app is configured to run on multiple cores, start the other core and wait for it to initialize as well (inside the similar "port layer" initialization function `call_start_cpu1`).

Once `call_start_cpu0` completes running, it calls the "system layer" initialization function `start_cpu0` found in components/esp_system/startup.c. Other cores will also complete port-layer initialization and call `start_other_cores` found in the same file.

System Initialization

The main system initialization function is `start_cpu0`. By default, this function is weak-linked to the function `start_cpu0_default`. This means that it's possible to override this function to add some additional initialization steps.

The primary system initialization stage includes:

- Log information about this application (project name, *App version*, etc.) if default log level enables this.
- Initialize the heap allocator (before this point all allocations must be static or on the stack).
- Initialize newlib component syscalls and time functions.
- Configure the brownout detector.
- Setup libc stdin, stdout, and stderr according to the *serial console configuration*.
- Perform any security-related checks, including burning efuses that should be burned for this configuration (including *disabling ROM download mode on ESP32 V3*, *CONFIG_ESP32_DISABLE_BASIC_ROM_CONSOLE*).
- Initialize SPI flash API support.
- Call global C++ constructors and any C functions marked with `__attribute__((constructor))`.

Secondary system initialization allows individual components to be initialized. If a component has an initialization function annotated with the `ESP_SYSTEM_INIT_FN` macro, it will be called as part of secondary initialization.

Running the main task

After all other components are initialized, the main task is created and the FreeRTOS scheduler starts running.

After doing some more initialization tasks (that require the scheduler to have started), the main task runs the application-provided function `app_main` in the firmware.

The main task that runs `app_main` has a fixed RTOS priority (one higher than the minimum) and a *configurable stack size*.

The main task core affinity is also configurable: *CONFIG_ESP_MAIN_TASK_AFFINITY*.

Unlike normal FreeRTOS tasks (or embedded C `main` functions), the `app_main` task is allowed to return. If this happens, The task is cleaned up and the system will continue running with other RTOS tasks scheduled normally. Therefore, it is possible to implement `app_main` as either a function that creates other application tasks and then returns, or as a main application task itself.

Second core startup

A similar but simpler startup process happens on the APP CPU:

When running system initialization, the code on PRO CPU sets the entry point for APP CPU, de-asserts APP CPU reset, and waits for a global flag to be set by the code running on APP CPU, indicating that it has started. Once this is done, APP CPU jumps to `call_start_cpu1` function in components/esp_system/port/cpu_start.c.

While PRO CPU does initialization in `start_cpu0` function, APP CPU runs `start_cpu_other_cores` function. Similar to `start_cpu0`, this function is weak-linked and defaults to the `start_cpu_other_cores_default` function but can be replaced with a different function by the application.

The `start_cpu_other_cores_default` function does some core-specific system initialization and then waits for the PRO CPU to start the FreeRTOS scheduler, at which point it executes `esp_startup_start_app_other_cores` which is another weak-linked function defaulting to `esp_startup_start_app_other_cores_default`.

By default `esp_startup_start_app_other_cores_default` does nothing but spin in a busy-waiting loop until the scheduler of the PRO CPU triggers an interrupt to start the RTOS scheduler on the APP CPU.

4.3 BluFi

4.3.1 Overview

The BluFi for ESP32 is a Wi-Fi network configuration function via Bluetooth channel. It provides a secure protocol to pass Wi-Fi configuration and credentials to the ESP32. Using this information ESP32 can then e.g. connect to an AP or establish a SoftAP.

Fragmenting, data encryption, checksum verification in the BluFi layer are the key elements of this process.

You can customize symmetric encryption, asymmetric encryption and checksum support customization. Here we use the DH algorithm for key negotiation, 128-AES algorithm for data encryption, and CRC16 algorithm for checksum verification.

4.3.2 The BluFi Flow

The BluFi networking flow includes the configuration of the SoftAP and Station.

The following uses Station as an example to illustrate the core parts of the procedure, including broadcast, connection, service discovery, negotiation of the shared key, data transmission, connection status backhaul.

1. Set the ESP32 into GATT Server mode and then it will send broadcasts with specific *advertising data*. You can customize this broadcast as needed, which is not a part of the BluFi Profile.
2. Use the App installed on the mobile phone to search for this particular broadcast. The mobile phone will connect to ESP32 as the GATT Client once the broadcast is confirmed. The App used during this part is up to you.
3. After the GATT connection is successfully established, the mobile phone will send a data frame for key negotiation to ESP32 (see the section *The Frame Formats Defined in BluFi* for details).
4. After ESP32 receives the data frame of key negotiation, it will parse the content according to the user-defined negotiation method.
5. The mobile phone works with ESP32 for key negotiation using the encryption algorithms such as DH, RSA or ECC.
6. After the negotiation process is completed, the mobile phone will send a control frame for security-mode setup to ESP32.
7. When receiving this control frame, ESP32 will be able to encrypt and decrypt the communication data using the shared key and the security configuration.
8. The mobile phone sends the data frame defined in the section of *The Frame Formats Defined in BluFi*, with the Wi-Fi configuration information to ESP32, including SSID, password, etc.
9. The mobile phone sends a control frame of Wi-Fi connection request to ESP32. When receiving this control frame, ESP32 will regard the communication of essential information as done and get ready to connect to the Wi-Fi.
10. After connecting to the Wi-Fi, ESP32 will send a control frame of Wi-Fi connection status report to the mobile phone, to report the connection status. At this point the networking procedure is completed.

Note:

1. After ESP32 receives the control frame of security-mode configuration, it will execute the operations in accordance with the defined security mode.
2. The data lengths before and after symmetric encryption/decryption must stay the same. It also supports in-place encryption and decryption.

4.3.3 The Flow Chart of BluFi

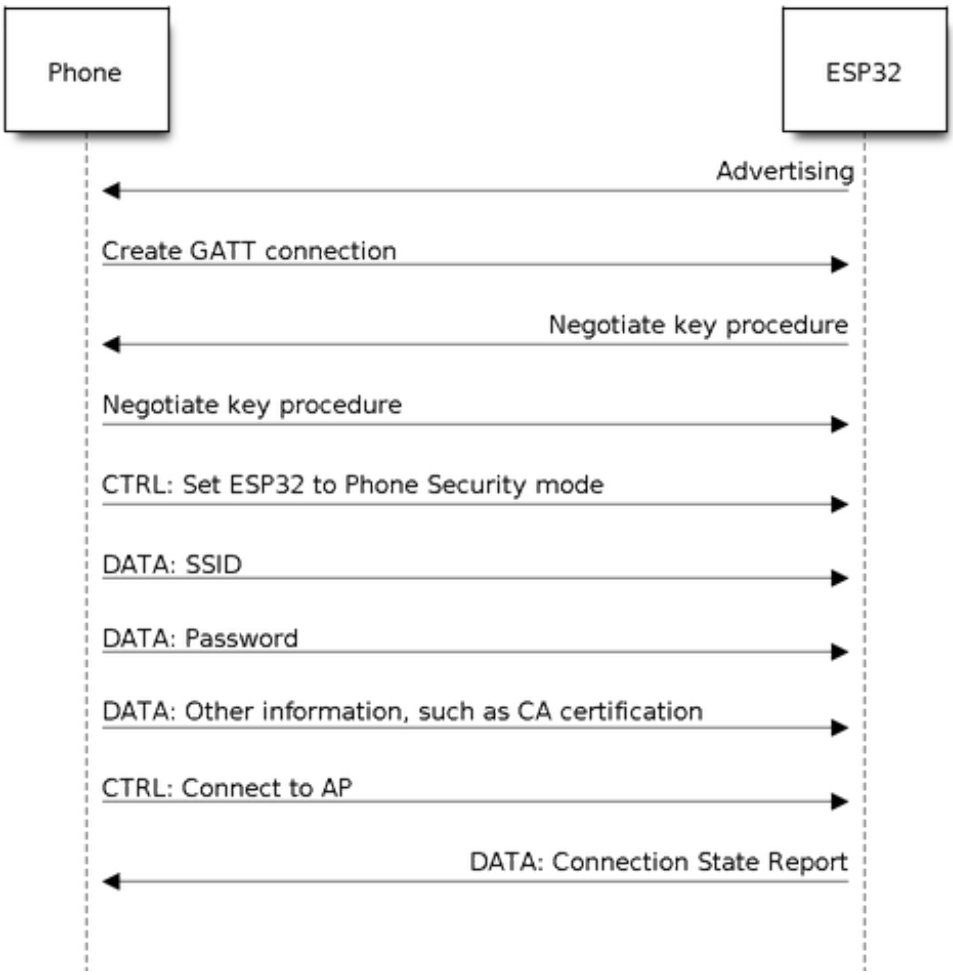

Fig. 2: BluFi Flow Chart

4.3.4 The Frame Formats Defined in BluFi

The frame formats for the communication between the mobile phone App and ESP32 are defined as follows:

The frame format with no fragment (8 bit):

Description	Value
Type (Least Significant Bit)	1
Frame Control	1
Sequence Number	1
Data Length	1
Data	${Data Length}
CheckSum (Most Siginificant Bit)	2

If the **Frame Ctrl** bit is enabled, the **Total length** bit indicates the length of remaining part of the frame. It can tell the remote how much memory needs to be alloced.

The frame format with fragments（8 bit）:

Description	Value
Type (Least Significant Bit)	1
Frame Control (Frag)	1
Sequence Number	1
Data Length	1
Data	• Total Content Length: 2 • Content: ${Data Length} - 2
CheckSum (Most Siginificant Bit)	2

Normally, the control frame does not contain data bits, except for ACK Frame.

The format of ACK Frame（8 bit）:

Description	Value
Type - ACK (Least Significant Bit)	1
Frame Control	1
Sequence Number	1
Data Length	1
Data	Acked Sequence Number: 2
CheckSum (Most Siginificant Bit)	2

1. Type
   The **Type** field, taking 1 byte, is divided into **Type** and **Subtype**, that Type uses the lower 2 bits and **Subtype** uses the upper 6 bits.
   - The control frame is not encrypted for the time being and supports to be verified;
   - The data frame supports to be encrypted and verified.

1.1 Control Frame (Binary: 0x0 b’ 00)

Control Frame	Implication	Explanation	Note
0x0 (b'000000)	ACK	The data field of the ACK frame uses the same sequence value of the frame to reply to.	The data field consumes a byte and its value is the same as the sequence field of the frame to reply to.
0x1 (b'000001)	Set ESP device to the security mode.	To inform ESP device of the security mode to use when sending data, which is allowed to be reset multiple times during the process. Each setting affects the subsequent security mode used. If it is not set, ESP device will send the control frame and data frame with no checksum and encryption by default. The data transmission from the mobile phone to ESP device is controlled by this control frame.	The data field consumes a byte. The higher 4 bits are for the security mode setting of the control frame, and the lower 4 bits are for the security mode setting of the data frame. • b' 0000: no checksum and no encryption; • b' 0001: with checksum but no encryption; • b' 0010: no checksum but with encryption; • b' 0011: with both checksum and encryption.
0x2 (b'000010)	Set the opmode of Wi-Fi.	The frame contains opmode settings for configuring the Wi-Fi mode of ESP device.	data[0] is for opmode settings, including: • 0x00: NULL • 0x01: STA • 0x02: SoftAP • 0x03: SoftAP & STA Please set the SSID/Password/Max Connection Number of the AP mode in the first place if an AP gets involved.
0x3 (b'000011)	Connect ESP device to the AP.	To notify ESP device that the essential information has been sent and it is allowed to connect to the AP.	No data field is contained.
0x4 (b'000100)	Disconnect ESP device from the AP.		No data field is contained.
0x5 (b'000101)	To get the information of ESP device's Wi-Fi mode and it's status.		• No data field is contained. When receiving this control frame, ESP device will send back a follow-up frame of Wi-Fi connection state report to the mobile phone with the information of the current opmode, connection status, SSID and so on. • The types of information sent to the mobile phone is defined by the application installed on the phone.
0x6 (b'000110)	Disconnect the STA device from the SoftAP (in SoftAP mode).		Date[0~5] is taken as the MAC address for the STA device. If there is a second STA device, then it uses data[6-11] and the rest can be done in the same manner.
0x7 (b'000111)	Get the version information.		
0x8 (b'001000)	Disconnect the BLE GATT link.		ESP device will disconnect the BLE GATT link after receives this command.
0x9 (b'001001)	Get the Wi-Fi list.	To get ESP device to scan the Wi-Fi access points around.	No data field is contained. When receiving this control frame, ESP device will send back a follow-up frame of Wi-Fi list report to the mobile phone.

1.2 Data Frame (Binary: 0x1 b’01)

Data Frame	Implication	Explanation	Note
0x0 (b'000000)	Send the negotiation data.	The negotiation data will be sent to the callback function registered in the application layer.	The length of the data depends on the length field.
0x1 (b'000001)	Send the BSSID for STA mode.	To send the BSSID of the AP for the STA device to connect under the condition that the SSID is hidden.	Please refer to Note 1 below.
0x2 (b'000010)	Send the SSID for STA mode.	To send the SSID of the AP for the STA device to connect.	Please refer to Note 1 below.
0x3 (b'000011)	Send the password for STA mode.	To send the password of the AP for the STA device to connect.	Please refer to Note 1 below.
0x4 (b'000100)	Send the SSID for SoftAP mode.		Please refer to Note 1 below.
0x5 (b'000101)	Send the password for SoftAPmode.		Please refer to Note 1 below.
0x6 (b'000110)	Set the maximum connection number for SoftAP mode.		data[0] represents the value of the connection number, ranging from 1 to 4. When the transmission direction is ESP device to the mobile phone, it means to provide the mobile phone with the needed information.
0x7 (b'000111)	Set the authentication mode for the SoftAP.		data[0]: • 0x00: OPEN • 0x01: WEP • 0x02: WPA_PSK • 0x03: WPA2_PSK • 0x04: WPA_WPA2_PSK When the transmission direction is ESP device to the mobile phone, it means to provide the mobile phone with the needed information.
0x8 (b'001000)	Set the number of channels for SoftAP mode.		data[0] represents the quantity of the supported channels, ranging from 1 to 14. When the transmission direction is ESP device to the mobile phone, it means to provide the mobile phone with the needed information.
0x9 (b'001001)	Username	It provides the username of the GATT client when using encryption of enterprise level.	The length of the data depends on the length field.
0xa (b'001010)	CA Certification	It provides the CA Certification when using encryption of enterprise level.	Please refer to Note 2 below.
0xb (b'001011)	Client Certification	It provides the client certification when using encryption of enterprise level. Whether the private key is contained or not depends on the content of the certification.	Please refer to Note 2 below.
0xc (b'001100)	Server Certification	It provides the sever certification when using encryption of enterprise level. Whether the private key is contained or not depends on the content of the certification.	Please refer to Note 2 below.
0xd (b'001101)	Client Private Key	It provides the private key of the client when using encryption of enterprise level.	Please refer to Note 2 below.
0xe	Server Private Key	It provides the private key of	Please refer to Note 2 below.

Submit Document Feedback

Note:

- Note 1: The length of the data depends on the length field. When the transmission direction is ESP device to the mobile phone, it means to provide the mobile phone with the needed information.
- Note 2: The length of the data depends on the length field. The frame supports to be fragmented if the data length is not enough.

2. Frame Control
   Control field, takes 1 byte and each bit has a different meaning.

Bit	Meaning
0x01	Indicates whether the frame is encrypted. • 1 means encryption • 0 means unencrypted The encrypted part of the frame includes the full clear data before the DATA field is encrypted (no checksum). Control frame is not encrypted, so this bit is 0.
0x02	The data field that indicates whether a frame contains a checksum (such as SHA1,MD5,CRC, etc.) for the end of the frame. Data field includes sequence + data length + clear text. Both the control frame and the data frame can contain a check bit or not.
0x04	Represents the data direction. • 0 means the mobile phone to ESP device; • 1 means ESP device to the mobile phone.
0x08	Indicates whether the other person is required to reply to an ACK. • 0 indicates no requirement; • 1 indicates to reply ACK.
0x10	Indicates whether there are subsequent data fragments. • 0 indicates that there are no subsequent data fragments for this frame; • 1 indicates that there are subsequent data fragments and used to transmit longer data. In the case of a frag frame, the total length of the current content section + subsequent content section is given, in the first 2 bytes of the data field (that is, the content data of the maximum support 64 K).
0x10~0x80	reserved

3. Sequence Control
   Sequence control field. When a frame is sent,the value of sequence fied is automatically incremented by 1 regardless of the type of frame, which prevents Replay Attack. The sequence is cleared after each reconnection.
4. Length
   The length of the data field that does not include CheckSum.
5. Data
   The instruction of the data field is different according to various values of Type or Subtype. Please refer to the table above.
6. CheckSum
   This field takes 2 bytes that is used to check "sequence + data length + clear text data" .

4.3.5 The Security Implementation of ESP32

1. Securing data
   To ensure that the transmission of the Wi-Fi SSID and password is secure, the message needs to be encrypted using symmetric encryption algorithms, such as AES, DES and so on. Before using symmetric encryption algorithms, the devices are required to negotiate (or generate) a shared key using an asymmetric encryption algorithm (DH, RSA, ECC, etc).
2. Ensuring data integrity

To ensure data integrity, you need to add a checksum algorithm, such as SHA1, MD5, CRC, etc.

3. Securing identity (signature)
   Algorithm like RSA can be used to secure identity. But for DH, it needs other algorithms as an companion for signature.
4. Replay attack prevention
   It is added to the Sequence field and used during the checksum verification.
   For the coding of ESP32, you can determine and develop the security processing, such as key negotiation. The mobile application sends the negotiation data to ESP32 and then the data will be sent to the application layer for processing. If the application layer does not process it, you can use the DH encryption algorithm provided by BluFi to negotiate the key.
   The application layer needs to register several security-related functions to BluFi:

```
typedef void (*esp_blufi_negotiate_data_handler_t)(uint8_t *data, int len, uint8_t␣
↪**output_data, int *output_len, bool *need_free)
```

This function is for ESP32 to receive normal data during negotiation, and after processing is completed, the data will be transmitted using Output_data and Output_len.

BluFi will send output_data from Negotiate_data_handler after Negotiate_data_handler is called.

Here are two "*" , because the length of the data to be emitted is unknown that requires the function to allocate itself (malloc) or point to the global variable, and to inform whether the memory needs to be freed by NEED_FREE.

```
typedef int (* esp_blufi_encrypt_func_t)(uint8_t iv8, uint8_t *crypt_data, int␣
↪crypt_len)
```

The data to be encrypted and decrypted must use the same length. The IV8 is a 8 bit sequence value of frames, which can be used as a 8 bit of IV.

```
typedef int (* esp_blufi_decrypt_func_t)(uint8_t iv8, uint8_t *crypt_data, int␣
↪crypt_len)
```

The data to be encrypted and decrypted must use the same length. The IV8 is a 8 bit sequence value of frames, which can be used as a 8 bit of IV.

```
typedef uint16_t (*esp_blufi_checksum_func_t)(uint8_t iv8, uint8_t *data, int len)
```

This function is used to compute CheckSum and return a value of CheckSum. BluFi uses the returned value to compare the CheckSum of the frame.

4.3.6 GATT Related Instructions

UUID

BluFi Service UUID: 0xFFFF, 16 bit

BluFi (the mobile -> ESP32): 0xFF01, writable

Blufi (ESP32 -> the mobile phone): 0xFF02, readable and callable

4.4 Bootloader

The ESP-IDF Software Bootloader performs the following functions:

1. Minimal initial configuration of internal modules;
2. Initialize *Flash Encryption* and/or *Secure* features, if configured;
3. Select the application partition to boot, based on the partition table and ota_data (if any);
4. Load this image to RAM (IRAM & DRAM) and transfer management to the image that was just loaded.

Bootloader is located at the address 0x1000 in the flash.

For a full description of the startup process including the the ESP-IDF bootloader, see *Application Startup Flow*.

4.4.1 Bootloader compatibility

It is recommended to update to newer *versions of ESP-IDF*: when they are released. The OTA (over the air) update process can flash new apps in the field but cannot flash a new bootloader. For this reason, the bootloader supports booting apps built from newer versions of ESP-IDF.

The bootloader does not support booting apps from older versions of ESP-IDF. When updating ESP-IDF manually on an existing product that might need to downgrade the app to an older version, keep using the older ESP-IDF bootloader binary as well.

Note: If testing an OTA update for an existing product in production, always test it using the same ESP-IDF bootloader binary that is deployed in production.

Before ESP-IDF V2.1

Bootloaders built from very old versions of ESP-IDF (before ESP-IDF V2.1) perform less hardware configuration than newer versions. When using a bootloader from these early ESP-IDF versions and building a new app, enable the config option *CONFIG_ESP32_COMPATIBLE_PRE_V2_1_BOOTLOADERS*.

Before ESP-IDF V3.1

Bootloaders built from versions of ESP-IDF before V3.1 do not support MD5 checksums in the partition table binary. When using a bootloader from these ESP-IDF versions and building a new app, enable the config option *CONFIG_ESP32_COMPATIBLE_PRE_V3_1_BOOTLOADERS*.

SPI Flash Configuration

Each ESP-IDF application or bootloader .bin file contains a header with *CONFIG_ESPTOOLPY_FLASHMODE*, *CONFIG_ESPTOOLPY_FLASHFREQ*, *CONFIG_ESPTOOLPY_FLASHSIZE* embedded in it. These are used to configure the SPI flash during boot.

The *First stage bootloader* in ROM reads the *Second stage bootloader* header information from flash and uses this infomation to load the rest of the *Second stage bootloader* from flash. However, at this time the system clock speed is lower than configured and not all flash modes are supported. When the *Second stage bootloader* then runs, it will reconfigure the flash using values read from the currently selected app binary's header (and NOT from the *Second stage bootloader* header). This allows an OTA update to change the SPI flash settings in use.

Bootloaders prior to ESP-IDF V4.0 used the bootloader's own header to configure the SPI flash, meaning these values could not be changed in an update. To maintain compatibility with older bootloaders, the app re-initializes the flash settings during app startup using the configuration found in the app header.

4.4.2 Log Level

The default bootloader log level is "Info". By setting the *CONFIG_BOOTLOADER_LOG_LEVEL* option, it's possible to increase or decrease this level. This log level is separate from the log level used in the app (see *Logging library*).

Reducing bootloader log verbosity can improve the overall project boot time by a small amount.

4.4.3 Factory reset

Sometimes it is desirable to have a way for the device to fall back to a known-good state, in case of some problem with an update.

To roll back to the original "factory" device configuration and clear any user settings, configure the config item *CONFIG_BOOTLOADER_FACTORY_RESET* in the bootloader.

The factory reset mechanism allows the device to be factory reset in two ways:

- Clear one or more data partitions. The *CONFIG_BOOTLOADER_DATA_FACTORY_RESET* option allows users to specify which data partitions will be erased when the factory reset is executed.
  Users can specify the names of partitions as a comma-delimited list with optional spaces for readability. (Like this: `nvs, phy_init, nvs_custom`).
  Make sure that the names of partitions specified in the option are the same as those found in the partition table. Partitions of type "app" cannot be specified here.
- Boot from "factory" app partition. Enabling the *CONFIG_BOOTLOADER_OTA_DATA_ERASE* option will cause the device to boot from the default "factory" app partition after a factory reset (or if there is no factory app partition in the partition table then the default ota app partition is selected instead). This reset process involves erasing the OTA data partition which holds the currently selected OTA partition slot. The "factory" app partition slot (if it exists) is never updated via OTA, so resetting to this allows reverting to a "known good" firmware application.

Either or both of these configuration options can be enabled independently.

In addition, the following configuration options control the reset condition:

- *CONFIG_BOOTLOADER_NUM_PIN_FACTORY_RESET*- The input GPIO number used to trigger a factory reset. This GPIO must be pulled low or high (configurable) on reset to trigger this.
- *CONFIG_BOOTLOADER_HOLD_TIME_GPIO*- this is hold time of GPIO for reset/test mode (by default 5 seconds). The GPIO must be held continuously for this period of time after reset before a factory reset or test partition boot (as applicable) is performed.
- *CONFIG_BOOTLOADER_FACTORY_RESET_PIN_LEVEL* - configure whether a factory reset should trigger on a high or low level of the GPIO. If the GPIO has an internal pullup then this is enabled before the pin is sampled, consult the ESP32 datasheet for details on pin internal pullups.

4.4.4 Boot from Test Firmware

It's possible to write a special firmware app for testing in production, and boot this firmware when needed. The project partition table will need a dedicated app partition entry for this testing app, type `app` and subtype `test` (see *Partition Tables*).

Implementing a dedicated test app firmware requires creating a totally separate ESP-IDF project for the test app (each project in ESP-IDF only builds one app). The test app can be developed and tested independently of the main project, and then integrated at production testing time as a pre-compiled .bin file which is flashed to the address of the main project's test app partition.

To support this functionality in the main project's bootloader, set the configuration item *CONFIG_BOOTLOADER_APP_TEST* and configure the following two items:

- *CONFIG_BOOTLOADER_NUM_PIN_APP_TEST* - GPIO number to boot TEST partition. The selected GPIO will be configured as an input with internal pull-up enabled. To trigger a test app, this GPIO must be pulled low on reset.
  Once the GPIO input is released (allowing it to be pulled up) and the device has been reboot, the normally configured application will boot (factory or any OTA app partition slot).
- *CONFIG_BOOTLOADER_HOLD_TIME_GPIO* - this is hold time of GPIO for reset/test mode (by default 5 seconds). The GPIO must be held low continuously for this period of time after reset before a factory reset or test partition boot (as applicable) is performed.

4.4.5 Rollback

Rollback and anti-rollback features must be configured in the bootloader as well.

Consult the *App rollback* and *Anti-rollback* sections in the *OTA API reference document*.

4.4.6 Watchdog

By default, the hardware RTC Watchdog timer remains running while the bootloader is running and will automatically reset the chip if no app has successfully started after 9 seconds.

- The timeout period can be adjusted by setting *CONFIG_BOOTLOADER_WDT_TIME_MS* and recompiling the bootloader.
- The app's behaviour can be adjusted so the RTC Watchdog remains enabled after app startup. The Watchdog would need to be explicitly reset (i.e., fed) by the app to avoid a reset. To do this, set the *CONFIG_BOOTLOADER_WDT_DISABLE_IN_USER_CODE* option, modify the app as needed, and then recompile the app.
- The RTC Watchdog can be disabled in the bootloader by disabling the *CONFIG_BOOTLOADER_WDT_ENABLE* setting and recompiling the bootloader. This is not recommended.

4.4.7 Bootloader Size

When enabling additional bootloader functions, including *Flash Encryption* or Secure Boot, and especially if setting a high *CONFIG_BOOTLOADER_LOG_LEVEL* level, then it is important to monitor the bootloader .bin file's size.

When using the default *CONFIG_PARTITION_TABLE_OFFSET* value 0x8000, the size limit is 0x7000 (28672) bytes.

If the bootloader binary is too large, then the bootloader build will fail with an error "Bootloader binary size [..] is too large for partition table offset". If the bootloader binary is flashed anyhow then the ESP32 will fail to boot - errors will be logged about either invalid partition table or invalid bootloader checksum.

Note: The bootloader size check only happens in the CMake Build System, when using the legacy GNU Make Build System the size is not checked but the ESP32 will fail to boot if bootloader is too large.

Options to work around this are:

- Set *bootloader compiler optimization* back to "Size" if it has been changed from this default value.
- Reduce *bootloader log level*. Setting log level to Warning, Error or None all significantly reduce the final binary size (but may make it harder to debug).
- Set *CONFIG_PARTITION_TABLE_OFFSET* to a higher value than 0x8000, to place the partition table later in the flash. This increases the space available for the bootloader. If the *partition table* CSV file contains explicit partition offsets, they will need changing so no partition has an offset lower than `CONFIG_PARTITION_TABLE_OFFSET + 0x1000`. (This includes the default partition CSV files supplied with ESP-IDF.)

When Secure Boot V2 is enabled, there is also an absolute binary size limit of 48KB (0xC000 bytes) (excluding the 4 KB signature), because the bootloader is first loaded into a fixed size buffer for verification.

4.4.8 Fast boot from Deep Sleep

The bootloader has the *CONFIG_BOOTLOADER_SKIP_VALIDATE_IN_DEEP_SLEEP* option which allows the wake-up time from deep sleep to be reduced (useful for reducing power consumption). This option is available when *CONFIG_SECURE_BOOT* option is disabled. Reduction of time is achieved due to the lack of image verification. During the first boot, the bootloader stores the address of the application being launched in the RTC FAST memory. And during the awakening, this address is used for booting without any checks, thus fast loading is achieved.

4.4.9 Custom bootloader

The current bootloader implementation allows a project to extend it or modify it. There are two ways of doing it: by implementing hooks or by overriding it. Both ways are presented in custom_bootloader folder in ESP-IDF examples:

- *bootloader_hooks* which presents how to connect some hooks to the bootloader initialization
- *bootloader_override* which presents how to override the bootloader implementation

In the bootloader space, you cannot use the drivers and functions from other components. If necessary, then the required functionality should be placed in the project's *bootloader_components* directory (note that this will increase its size).

If the bootloader grows too large then it can collide with the partition table, which is flashed at offset 0x8000 by default. Increase the *partition table offset* value to place the partition table later in the flash. This increases the space available for the bootloader.

Note: Customize the bootloader by using either method is only supported with CMake build system (i.e. not supported with legacy Make build system).

4.5 Build System

This document explains the implementation of the ESP-IDF build system and the concept of "components". Read this document if you want to know how to organize and build a new ESP-IDF project or component.

Note: This document describes the CMake-based build system, which is the default since ESP-IDF V4.0. ESP-IDF also supports a *legacy build system based on GNU Make*, which was the default before ESP-IDF V4.0.

4.5.1 Overview

An ESP-IDF project can be seen as an amalgamation of a number of components. For example, for a webserver that shows the current humidity, there could be:

- The ESP-IDF base libraries (libc, ROM bindings, etc)
- The Wi-Fi drivers
- A TCP/IP stack
- The FreeRTOS operating system
- A webserver
- A driver for the humidity sensor
- Main code tying it all together

ESP-IDF makes these components explicit and configurable. To do that, when a project is compiled, the build system will look up all the components in the ESP-IDF directories, the project directories and (optionally) in additional custom component directories. It then allows the user to configure the ESP-IDF project using a text-based menu system to customize each component. After the components in the project are configured, the build system will compile the project.

Concepts

- A "project" is a directory that contains all the files and configuration to build a single "app" (executable), as well as additional supporting elements such as a partition table, data/filesystem partitions, and a bootloader.
- "Project configuration" is held in a single file called `sdkconfig` in the root directory of the project. This configuration file is modified via `idf.py menuconfig` to customise the configuration of the project. A single project contains exactly one project configuration.

- An "app" is an executable which is built by ESP-IDF. A single project will usually build two apps - a "project app" (the main executable, ie your custom firmware) and a "bootloader app" (the initial bootloader program which launches the project app).
- "components" are modular pieces of standalone code which are compiled into static libraries (.a files) and linked into an app. Some are provided by ESP-IDF itself, others may be sourced from other places.
- "Target" is the hardware for which an application is built. A full list of supported targets in your version if ESP-IDF can be seen by running *idf.py –list-targets*.

Some things are not part of the project:

- "ESP-IDF" is not part of the project. Instead it is standalone, and linked to the project via the `IDF_PATH` environment variable which holds the path of the `esp-idf` directory. This allows the IDF framework to be decoupled from your project.
- The toolchain for compilation is not part of the project. The toolchain should be installed in the system command line PATH.

4.5.2 Using the Build System

idf.py

The `idf.py` command-line tool provides a front-end for easily managing your project builds. It manages the following tools:

- CMake, which configures the project to be built
- A command-line build tool (either Ninja build or *GNU Make*)
- esptool.py for flashing the target.

The *getting started guide* contains a brief introduction to how to set up `idf.py` to configure, build, and flash projects.

`idf.py` should be run in an ESP-IDF "project" directory, i.e. one containing a `CMakeLists.txt` file. Older style projects with a Makefile will not work with `idf.py`.

Type `idf.py --help` for a list of commands. Here are a summary of the most useful ones:

- `idf.py set-target <target>` sets the target (chip) for which the project is built. See *Selecting the Target*.
- `idf.py menuconfig` runs the "menuconfig" tool to configure the project.
- `idf.py build` will build the project found in the current directory. This can involve multiple steps:
  - Create the build directory if needed. The sub-directory `build` is used to hold build output, although this can be changed with the `-B` option.
  - Run CMake as necessary to configure the project and generate build files for the main build tool.
  - Run the main build tool (Ninja or *GNU Make*). By default, the build tool is automatically detected but it can be explicitly set by passing the `-G` option to `idf.py`.

  Building is incremental so if no source files or configuration has changed since the last build, nothing will be done.
- `idf.py clean` will "clean" the project by deleting build output files from the build directory, forcing a "full rebuild" the next time the project is built. Cleaning doesn't delete CMake configuration output and some other files.
- `idf.py fullclean` will delete the entire "build" directory contents. This includes all CMake configuration output. The next time the project is built, CMake will configure it from scratch. Note that this option recursively deletes *all* files in the build directory, so use with care. Project configuration is not deleted.
- `idf.py flash` will automatically build the project if necessary, and then flash it to the target. The `-p` and `-b` options can be used to set serial port name and flasher baud rate, respectively.
- `idf.py monitor` will display serial output from the target. The `-p` option can be used to set the serial port name. Type `Ctrl-]` to exit the monitor. See *IDF Monitor* for more details about using the monitor.

Multiple `idf.py` commands can be combined into one. For example, `idf.py -p COM4 clean flash monitor` will clean the source tree, then build the project and flash it to the target before running the serial monitor.

For commands that are not known to `idf.py` an attempt to execute them as a build system target will be made.

The command `idf.py` supports shell autocompletion for bash, zsh and fish shells.

In order to make shell autocompletion supported, please make sure you have at least Python 3.5 and click 7.1 or newer (*see also*).

To enable autocompletion for `idf.py` use the `export` command (*see this*). Autocompletion is initiated by pressing the TAB key. Type "idf.py -" and press the TAB key to autocomplete options.

The autocomplete support for PowerShell is planned in the future.

Note: The environment variables `ESPPORT` and `ESPBAUD` can be used to set default values for the `-p` and `-b` options, respectively. Providing these options on the command line overrides the default.

Advanced Commands

- `idf.py app`, `idf.py bootloader`, `idf.py partition-table` can be used to build only the app, bootloader, or partition table from the project as applicable.
- There are matching commands `idf.py app-flash`, etc. to flash only that single part of the project to the target.
- `idf.py -p PORT erase-flash` will use esptool.py to erase the target's entire flash chip.
- `idf.py size` prints some size information about the app. `size-components` and `size-files` are similar commands which print more detailed per-component or per-source-file information, respectively. If you define variable `-DOUTPUT_JSON=1` when running CMake (or `idf.py`), the output will be formatted as JSON not as human readable text. See `idf.py-size` for more information.
- `idf.py reconfigure` re-runs CMake even if it doesn't seem to need re-running. This isn't necessary during normal usage, but can be useful after adding/removing files from the source tree, or when modifying CMake cache variables. For example, `idf.py -DNAME='VALUE' reconfigure` can be used to set variable `NAME` in CMake cache to value `VALUE`.
- `idf.py python-clean` deletes generated Python byte code from the IDF directory which may cause issues when switching between IDF and Python versions. It is advised to run this target after switching versions of Python.
- `idf.py docs` will open direct link to documentation for project's chip target and version in browser. To see all options use `idf.py docs --help`

The order of multiple `idf.py` commands on the same invocation is not important, they will automatically be executed in the correct order for everything to take effect (ie building before flashing, erasing before flashing, etc.).

idf.py options To list all available root level options, run `idf.py --help`. To list options that are specific for a subcommand, run `idf.py <command> --help`, for example `idf.py monitor --help`. Here is a list of some useful options:

- `-C <dir>` allows overriding the project directory from the default current working directory.
- `-B <dir>` allows overriding the build directory from the default `build` subdirectory of the project directory.
- `--ccache` flag can be used to enable CCache when compiling source files, if the CCache tool is installed. This can dramatically reduce some build times.

Note that some older versions of CCache may exhibit bugs on some platforms, so if files are not rebuilt as expected then try disabling CCache and build again. CCache can be enabled by default by setting the `IDF_CCACHE_ENABLE` environment variable to a non-zero value.

- `-v` flag causes both `idf.py` and the build system to produce verbose build output. This can be useful for debugging build problems.
- `--cmake-warn-uninitialized` (or `-w`) will cause CMake to print uninitialized variable warnings inside the project directory (not for directories not found inside the project directory). This only controls CMake variable warnings inside CMake itself, not other types of build warnings. This option can also be set permanently by setting the `IDF_CMAKE_WARN_UNINITIALIZED` environment variable to a non-zero value.

Start a new project

Use the command `idf.py create-project` for starting a new project. Execute `idf.py create-project --help` for more information.

Example:

```
idf.py create-project --path my_projects my_new_project
```

This example will create a new project called my_new_project directly into the directory my_projects.

Using CMake Directly

idf.py is a wrapper around CMake for convenience. However, you can also invoke CMake directly if you prefer.

When `idf.py` does something, it prints each command that it runs for easy reference. For example, the `idf.py build` command is the same as running these commands in a bash shell (or similar commands for Windows Command Prompt):

```
mkdir -p build
cd build
cmake .. -G Ninja    # or 'Unix Makefiles'
ninja
```

In the above list, the `cmake` command configures the project and generates build files for use with the final build tool. In this case the final build tool is Ninja: running `ninja` actually builds the project.

It's not necessary to run `cmake` more than once. After the first build, you only need to run `ninja` each time. `ninja` will automatically re-invoke `cmake` if the project needs reconfiguration.

If using CMake with `ninja` or `make`, there are also targets for more of the `idf.py` sub-commands - for example running `make menuconfig` or `ninja menuconfig` in the build directory will work the same as `idf.py menuconfig`.

Note: If you're already familiar with CMake, you may find the ESP-IDF CMake-based build system unusual because it wraps a lot of CMake's functionality to reduce boilerplate. See *writing pure CMake components* for some information about writing more "CMake style" components.

Flashing with ninja or make It's possible to build and flash directly from ninja or make by running a target like:

```
ninja flash
```

Or:

```
make app-flash
```

Available targets are: `flash`, `app-flash` (app only), `bootloader-flash` (bootloader only).

When flashing this way, optionally set the `ESPPORT` and `ESPBAUD` environment variables to specify the serial port and baud rate. You can set environment variables in your operating system or IDE project. Alternatively, set them directly on the command line:

```
ESPPORT=/dev/ttyUSB0 ninja flash
```

Note: Providing environment variables at the start of the command like this is Bash shell Syntax. It will work on Linux and macOS. It won't work when using Windows Command Prompt, but it will work when using Bash-like shells on Windows.

Or:

```
make -j3 app-flash ESPPORT=COM4 ESPBAUD=2000000
```

Note: Providing variables at the end of the command line is `make` syntax, and works for `make` on all platforms.

Using CMake in an IDE

You can also use an IDE with CMake integration. The IDE will want to know the path to the project's `CMakeLists.txt` file. IDEs with CMake integration often provide their own build tools (CMake calls these "generators") to build the source files as part of the IDE.

When adding custom non-build steps like "flash" to the IDE, it is recommended to execute `idf.py` for these "special" commands.

For more detailed information about integrating ESP-IDF with CMake into an IDE, see *Build System Metadata*.

Setting up the Python Interpreter

ESP-IDF works well with all supported Python versions. It should work out-of-box even if you have a legacy system where the default `python` interpreter is still Python 2.7, however, it is advised to switch to Python 3 if possible.

`idf.py` and other Python scripts will run with the default Python interpreter, i.e. `python`. You can switch to a different one like `python3 $IDF_PATH/tools/idf.py ...`, or you can set up a shell alias or another script to simplify the command.

If using CMake directly, running `cmake -D PYTHON=python3 ...` will cause CMake to override the default Python interpreter.

If using an IDE with CMake, setting the `PYTHON` value as a CMake cache override in the IDE UI will override the default Python interpreter.

To manage the Python version more generally via the command line, check out the tools pyenv or virtualenv. These let you change the default Python version.

Possible issues The user of `idf.py` may sometimes experience `ImportError` described below.

```
Traceback (most recent call last):
  File "/Users/user_name/e/esp-idf/tools/kconfig_new/confgen.py", line 27, in
↪<module>
    import kconfiglib
ImportError: bad magic number in 'kconfiglib': b'\x03\xf3\r\n'
```

The exception is often caused by `.pyc` files generated by different Python versions. To solve the issue run the following command:

```
idf.py python-clean
```

4.5.3 Example Project

An example project directory tree might look like this:

```
- myProject/
             - CMakeLists.txt
             - sdkconfig
             - components/ - component1/ - CMakeLists.txt
```

(continues on next page)

(continued from previous page)

```
                                    - Kconfig
                                    - src1.c
                        - component2/ - CMakeLists.txt
                                    - Kconfig
                                    - src1.c
                                    - include/ - component2.h
            - main/       - CMakeLists.txt
                          - src1.c
                          - src2.c

            - build/
```

This example "myProject" contains the following elements:

- A top-level project CMakeLists.txt file. This is the primary file which CMake uses to learn how to build the project; and may set project-wide CMake variables. It includes the file /tools/cmake/project.cmake which implements the rest of the build system. Finally, it sets the project name and defines the project.
- "sdkconfig" project configuration file. This file is created/updated when `idf.py menuconfig` runs, and holds configuration for all of the components in the project (including ESP-IDF itself). The "sdkconfig" file may or may not be added to the source control system of the project.
- Optional "components" directory contains components that are part of the project. A project does not have to contain custom components of this kind, but it can be useful for structuring reusable code or including third party components that aren't part of ESP-IDF. Alternatively, `EXTRA_COMPONENT_DIRS` can be set in the top-level CMakeLists.txt to look for components in other places. See the *renaming main* section for more info. If you have a lot of source files in your project, we recommend grouping most into components instead of putting them all in "main".
- "main" directory is a special component that contains source code for the project itself. "main" is a default name, the CMake variable `COMPONENT_DIRS` includes this component but you can modify this variable.
- "build" directory is where build output is created. This directory is created by `idf.py` if it doesn't already exist. CMake configures the project and generates interim build files in this directory. Then, after the main build process is run, this directory will also contain interim object files and libraries as well as final binary output files. This directory is usually not added to source control or distributed with the project source code.

Component directories each contain a component `CMakeLists.txt` file. This file contains variable definitions to control the build process of the component, and its integration into the overall project. See *Component CMakeLists Files* for more details.

Each component may also include a `Kconfig` file defining the *component configuration* options that can be set via `menuconfig`. Some components may also include `Kconfig.projbuild` and `project_include.cmake` files, which are special files for *overriding parts of the project*.

4.5.4 Project CMakeLists File

Each project has a single top-level `CMakeLists.txt` file that contains build settings for the entire project. By default, the project CMakeLists can be quite minimal.

Minimal Example CMakeLists

Minimal project:

```
cmake_minimum_required(VERSION 3.5)
include($ENV{IDF_PATH}/tools/cmake/project.cmake)
project(myProject)
```

Mandatory Parts

The inclusion of these three lines, in the order shown above, is necessary for every project:

- `cmake_minimum_required(VERSION 3.5)` tells CMake the minimum version that is required to build the project. ESP-IDF is designed to work with CMake 3.5 or newer. This line must be the first line in the CMakeLists.txt file.
- `include($ENV{IDF_PATH}/tools/cmake/project.cmake)` pulls in the rest of the CMake functionality to configure the project, discover all the components, etc.
- `project(myProject)` creates the project itself, and specifies the project name. The project name is used for the final binary output files of the app - ie `myProject.elf`, `myProject.bin`. Only one project can be defined per CMakeLists file.

Optional Project Variables

These variables all have default values that can be overridden for custom behaviour. Look in /tools/cmake/project.cmake for all of the implementation details.

- `COMPONENT_DIRS`: Directories to search for components. Defaults to `IDF_PATH/components`, `PROJECT_DIR/components`, and `EXTRA_COMPONENT_DIRS`. Override this variable if you don't want to search for components in these places.
- `EXTRA_COMPONENT_DIRS`: Optional list of additional directories to search for components. Paths can be relative to the project directory, or absolute.
- `COMPONENTS`: A list of component names to build into the project. Defaults to all components found in the `COMPONENT_DIRS` directories. Use this variable to "trim down" the project for faster build times. Note that any component which "requires" another component via the REQUIRES or PRIV_REQUIRES arguments on component registration will automatically have it added to this list, so the `COMPONENTS` list can be very short.

Any paths in these variables can be absolute paths, or set relative to the project directory.

To set these variables, use the cmake set command ie `set(VARIABLE "VALUE")`. The `set()` commands should be placed after the `cmake_minimum(...)` line but before the `include(...)` line.

Renaming `main` component

The build system provides special treatment to the `main` component. It is a component that gets automatically added to the build provided that it is in the expected location, PROJECT_DIR/main. All other components in the build are also added as its dependencies, saving the user from hunting down dependencies and providing a build that works right out of the box. Renaming the `main` component causes the loss of these behind-the-scenes heavy lifting, requiring the user to specify the location of the newly renamed component and manually specifying its dependencies. Specifically, the steps to renaming `main` are as follows:

1. Rename `main` directory.
2. Set `EXTRA_COMPONENT_DIRS` in the project CMakeLists.txt to include the renamed `main` directory.
3. Specify the dependencies in the renamed component's CMakeLists.txt file via REQUIRES or PRIV_REQUIRES arguments *on component registration*.

Overriding default build specifications

The build sets some global build specifications (compile flags, definitions, etc.) that gets used in compiling all sources from all components.

For example, one of the default build specifications set is the compile option `-Wextra`. Suppose a user wants to use override this with `-Wno-extra`, it should be done after `project()`:

```
cmake_minimum_required(VERSION 3.5)
include($ENV{IDF_PATH}/tools/cmake/project.cmake)
project(myProject)

idf_build_set_property(COMPILE_OPTIONS "-Wno-error" APPEND)
```

This ensures that the compile options set by the user won't be overriden by the default build specifications, since the latter are set inside `project()`.

4.5.5 Component CMakeLists Files

Each project contains one or more components. Components can be part of ESP-IDF, part of the project's own components directory, or added from custom component directories (*see above*).

A component is any directory in the `COMPONENT_DIRS` list which contains a `CMakeLists.txt` file.

Searching for Components

The list of directories in `COMPONENT_DIRS` is searched for the project's components. Directories in this list can either be components themselves (ie they contain a *CMakeLists.txt* file), or they can be top-level directories whose sub-directories are components.

When CMake runs to configure the project, it logs the components included in the build. This list can be useful for debugging the inclusion/exclusion of certain components.

Multiple components with the same name

When ESP-IDF is collecting all the components to compile, it will do this in the order specified by `COMPONENT_DIRS`; by default, this means ESP-IDF's internal components first (`IDF_PATH/components`), then any components in directories specified in `EXTRA_COMPONENT_DIRS`, and finally the project's components (`PROJECT_DIR/components`). If two or more of these directories contain component sub-directories with the same name, the component in the last place searched is used. This allows, for example, overriding ESP-IDF components with a modified version by copying that component from the ESP-IDF components directory to the project components directory and then modifying it there. If used in this way, the ESP-IDF directory itself can remain untouched.

Note: If a component is overridden in an existing project by moving it to a new location, the project will not automatically see the new component path. Run `idf.py reconfigure` (or delete the project build folder) and then build again.

Minimal Component CMakeLists

The minimal component `CMakeLists.txt` file simply registers the component to the build system using `idf_component_register`:

```
idf_component_register(SRCS "foo.c" "bar.c"
                       INCLUDE_DIRS "include"
                       REQUIRES mbedtls)
```

- `SRCS` is a list of source files (`*.c`, `*.cpp`, `*.cc`, `*.S`). These source files will be compiled into the component library.
- `INCLUDE_DIRS` is a list of directories to add to the global include search path for any component which requires this component, and also the main source files.
- `REQUIRES` is not actually required, but it is very often required to declare what other components this component will use. See *Component Requirements*.

A library with the name of the component will be built and linked into the final app.

Directories are usually specified relative to the `CMakeLists.txt` file itself, although they can be absolute.

There are other arguments that can be passed to `idf_component_register`. These arguments are discussed *here*.

See *example component requirements* and *example component CMakeLists* for more complete component `CMakeLists.txt` examples.

Create a new component

Use the command `idf.py create-component` for creating a new component. The new component will contain set of files necessary for building a component. You may include the component's header file into your project and use its functionality. For more information execute `idf.py create-component --help`.

Example:

```
idf.py -C components create-component my_component
```

The example will create a new component in the subdirectory *components* under the current working directory. For more information about components follow the documentation page *see above*.

Preset Component Variables

The following component-specific variables are available for use inside component CMakeLists, but should not be modified:

- `COMPONENT_DIR`: The component directory. Evaluates to the absolute path of the directory containing `CMakeLists.txt`. The component path cannot contain spaces. This is the same as the `CMAKE_CURRENT_SOURCE_DIR` variable.
- `COMPONENT_NAME`: Name of the component. Same as the name of the component directory.
- `COMPONENT_ALIAS`: Alias of the library created internally by the build system for the component.
- `COMPONENT_LIB`: Name of the library created internally by the build system for the component.

The following variables are set at the project level, but available for use in component CMakeLists:

- `CONFIG_*`: Each value in the project configuration has a corresponding variable available in cmake. All names begin with `CONFIG_`. *More information here*.
- `ESP_PLATFORM`: Set to 1 when the CMake file is processed within ESP-IDF build system.

Build/Project Variables

The following are some project/build variables that are available as build properties and whose values can be queried using `idf_build_get_property` from the component CMakeLists.txt:

- `PROJECT_NAME`: Name of the project, as set in project CMakeLists.txt file.
- `PROJECT_DIR`: Absolute path of the project directory containing the project CMakeLists. Same as the `CMAKE_SOURCE_DIR` variable.
- `COMPONENTS`: Names of all components that are included in this build, formatted as a semicolon-delimited CMake list.
- `IDF_VER`: Git version of ESP-IDF (produced by `git describe`)
- `IDF_VERSION_MAJOR`, `IDF_VERSION_MINOR`, `IDF_VERSION_PATCH`: Components of ESP-IDF version, to be used in conditional expressions. Note that this information is less precise than that provided by `IDF_VER` variable. `v4.0-dev-*`, `v4.0-beta1`, `v4.0-rc1` and `v4.0` will all have the same values of `IDF_VERSION_*` variables, but different `IDF_VER` values.
- `IDF_TARGET`: Name of the target for which the project is being built.
- `PROJECT_VER`: Project version.
  - If *CONFIG_APP_PROJECT_VER_FROM_CONFIG* option is set, the value of *CONFIG_APP_PROJECT_VER* will be used.
  - Else, if `PROJECT_VER` variable is set in project CMakeLists.txt file, its value will be used.
  - Else, if the `PROJECT_DIR/version.txt` exists, its contents will be used as `PROJECT_VER`.
  - Else, if the project is located inside a Git repository, the output of git describe will be used.
  - Otherwise, `PROJECT_VER` will be "1".

Other build properties are listed *here*.

Controlling Component Compilation

To pass compiler options when compiling source files belonging to a particular component, use the target_compile_options function:

```
target_compile_options(${COMPONENT_LIB} PRIVATE -Wno-unused-variable)
```

To apply the compilation flags to a single source file, use the CMake set_source_files_properties command:

```
set_source_files_properties(mysrc.c
    PROPERTIES COMPILE_FLAGS
    -Wno-unused-variable
)
```

This can be useful if there is upstream code that emits warnings.

When using these commands, place them after the call to `idf_component_register` in the component CMakeLists file.

4.5.6 Component Configuration

Each component can also have a `Kconfig` file, alongside `CMakeLists.txt`. This contains configuration settings to add to the configuration menu for this component.

These settings are found under the "Component Settings" menu when menuconfig is run.

To create a component Kconfig file, it is easiest to start with one of the Kconfig files distributed with ESP-IDF.

For an example, see *Adding conditional configuration*.

4.5.7 Preprocessor Definitions

The ESP-IDF build system adds the following C preprocessor definitions on the command line:

- `ESP_PLATFORM` : Can be used to detect that build happens within ESP-IDF.
- `IDF_VER` : Defined to a git version string. E.g. `v2.0` for a tagged release or `v1.0-275-g0efaa4f` for an arbitrary commit.

4.5.8 Component Requirements

When compiling each component, the ESP-IDF build system recursively evaluates its dependencies. This means each component needs to declare the components that it depends on ("requires").

When writing a component

```
idf_component_register(...
                       REQUIRES mbedtls
                       PRIV_REQUIRES console spiffs)
```

- `REQUIRES` should be set to all components whose header files are #included from the *public* header files of this component.
- `PRIV_REQUIRES` should be set to all components whose header files are #included from *any source files* in this component, unless already listed in `REQUIRES`. Also any component which is required to be linked in order for this component to function correctly.
- The values of `REQUIRES` and `PRIV_REQUIRES` should not depend on any configuration choices (`CONFIG_xxx` macros). This is because requirements are expanded before configuration is loaded. Other component variables (like include paths or source files) can depend on configuration choices.

- Not setting either or both REQUIRES variables is fine. If the component has no requirements except for the *Common component requirements* needed for RTOS, libc, etc.

If a components only supports some target chips (values of IDF_TARGET) then it can specify REQUIRED_IDF_TARGETS in the idf_component_register call to express these requirements. In this case the build system will generate an error if the component is included into the build, but does not support the selected target.

Note: In CMake terms, REQUIRES & PRIV_REQUIRES are approximate wrappers around the CMake functions target_link_libraries(... PUBLIC ...) and target_link_libraries(... PRIVATE ...).

Example of component requirements

Imagine there is a car component, which uses the engine component, which uses the spark_plug component:

```
- autoProject/
             - CMakeLists.txt
             - components/ - car/ - CMakeLists.txt
                                  - car.c
                                  - car.h
                           - engine/ - CMakeLists.txt
                                     - engine.c
                                     - include/ - engine.h
                           - spark_plug/  - CMakeLists.txt
                                          - plug.c
                                          - plug.h
```

Car component The car.h header file is the public interface for the car component. This header includes engine.h directly because it uses some declarations from this header:

```
/* car.h */
#include "engine.h"

#ifdef ENGINE_IS_HYBRID
#define CAR_MODEL "Hybrid"
#endif
```

And car.c includes car.h as well:

```
/* car.c */
#include "car.h"
```

This means the car/CMakeLists.txt file needs to declare that car requires engine:

```
idf_component_register(SRCS "car.c"
                    INCLUDE_DIRS "."
                    REQUIRES engine)
```

- SRCS gives the list of source files in the car component.
- INCLUDE_DIRS gives the list of public include directories for this component. Because the public interface is car.h, the directory containing car.h is listed here.
- REQUIRES gives the list of components required by the public interface of this component. Because car.h is a public header and includes a header from engine, we include engine here. This makes sure that any other component which includes car.h will be able to recursively include the required engine.h also.

Engine component The `engine` component also has a public header file `include/engine.h`, but this header is simpler:

```
/* engine.h */
#define ENGINE_IS_HYBRID

void engine_start(void);
```

The implementation is in `engine.c`:

```
/* engine.c */
#include "engine.h"
#include "spark_plug.h"

...
```

In this component, `engine` depends on `spark_plug` but this is a private dependency. `spark_plug.h` is needed to compile `engine.c`, but not needed to include `engine.h`.

This means that the `engine/CMakeLists.txt` file can use `PRIV_REQUIRES`:

```
idf_component_register(SRCS "engine.c"
                    INCLUDE_DIRS "include"
                    PRIV_REQUIRES spark_plug)
```

As a result, source files in the `car` component don't need the `spark_plug` include directories added to their compiler search path. This can speed up compilation, and stops compiler command lines from becoming longer than necessary.

Spark Plug Component The `spark_plug` component doesn't depend on anything else. It has a public header file `spark_plug.h`, but this doesn't include headers from any other components.

This means that the `spark_plug/CMakeLists.txt` file doesn't need any `REQUIRES` or `PRIV_REQUIRES` clauses:

```
idf_component_register(SRCS "spark_plug.c"
                    INCLUDE_DIRS ".")
```

Source File Include Directories

Each component's source file is compiled with these include path directories, as specified in the passed arguments to `idf_component_register`:

```
idf_component_register(..
                        INCLUDE_DIRS "include"
                        PRIV_INCLUDE_DIRS "other")
```

- The current component's `INCLUDE_DIRS` and `PRIV_INCLUDE_DIRS`.
- The `INCLUDE_DIRS` belonging to all other components listed in the `REQUIRES` and `PRIV_REQUIRES` parameters (ie all the current component's public and private dependencies).
- Recursively, all of the `INCLUDE_DIRS` of those components `REQUIRES` lists (ie all public dependencies of this component's dependencies, recursively expanded).

Main component requirements

The component named `main` is special because it automatically requires all other components in the build. So it's not necessary to pass `REQUIRES` or `PRIV_REQUIRES` to this component. See *renaming main* for a description of what needs to be changed if no longer using the `main` component.

Common component requirements

To avoid duplication, every component automatically requires some "common" IDF components even if they are not mentioned explicitly. Headers from these components can always be included.

The list of common components is: cxx, newlib, freertos, esp_hw_support, heap, log, lwip, soc, hal, esp_rom, esp_common, esp_system.

Including components in the build

- By default, every component is included in the build.
- If you set the `COMPONENTS` variable to a minimal list of components used directly by your project, then the build will expand to also include required components. The full list of components will be:
  - Components mentioned explicitly in `COMPONENTS`.
  - Those components' requirements (evaluated recursively).
  - The "common" components that every component depends on.
- Setting `COMPONENTS` to the minimal list of required components can significantly reduce compile times.

Circular Dependencies

It's possible for a project to contain Component A that requires (`REQUIRES` or `PRIV_REQUIRES`) Component B, and Component B that requires Component A. This is known as a dependency cycle or a circular dependency.

CMake will usually handle circular dependencies automatically by repeating the component library names twice on the linker command line. However this strategy doesn't always work, and it's possible the build will fail with a linker error about "Undefined reference to ⋯", referencing a symbol defined by one of the components inside the circular dependency. This is particularly likely if there is a large circular dependency, i.e. A->B->C->D->A.

The best solution is to restructure the components to remove the circular dependency. In most cases, a software architecture without circular dependencies has desirable properties of modularity and clean layering and will be more maintainable in the long term. However, removing circular dependencies is not always possible.

To bypass a linker error caused by a circular dependency, the simplest workaround is to increase the CMake LINK_INTERFACE_MULTIPLICITY property of one of the component libraries. This causes CMake to repeat this library and its dependencies more than two times on the linker command line.

For example:

```
set_property(TARGET ${COMPONENT_LIB} APPEND PROPERTY LINK_INTERFACE_MULTIPLICITY 3)
```

- This line should be placed after `idf_component_register` in the component CMakeLists.txt file.
- If possible, place this line in the component that creates the circular dependency by depending on a lot of other components. However, the line can be placed inside any component that is part of the cycle. Choosing the component that owns the source file shown in the linker error message, or the component that defines the symbol(s) mentioned in the linker error message, is a good place to start.
- Usually increasing the value to 3 (default is 2) is enough, but if this doesn't work then try increasing the number further.
- Adding this option will make the linker command line longer, and the linking stage slower.

Advanced Workaround: Undefined Symbols If only one or two symbols is causing a circular dependency, and all other dependencies are linear, then there is an alternative method to avoid linker errors: Specify the specific symbols required for the "reverse" dependency as undefined symbols at link time.

For example, if component A depends on component B but component B also needs to reference `reverse_ops` from component A (but nothing else), then you can add a line like the following to the component B CMakeLists.txt to resolve the cycle at link time:

```
# This symbol is provided by 'Component A' at link time
target_link_libraries(${COMPONENT_LIB} INTERFACE "-u reverse_ops")
```

- The `-u` argument means that the linker will always include this symbol in the link, regardless of dependency ordering.
- This line should be placed after `idf_component_register` in the component CMakeLists.txt file.
- If 'Component B' doesn't need to access any headers of 'Component A', only link to a few symbol(s), then this line can be used instead of any `REQUIRES` from B to A. This further simplifies the component structure in the build system.

See the target_link_libraries documentation for more information about this CMake function.

Requirements in the build system implementation

- Very early in the CMake configuration process, the script `expand_requirements.cmake` is run. This script does a partial evaluation of all component CMakeLists.txt files and builds a graph of component requirements (this *graph may have cycles*). The graph is used to generate a file `component_depends.cmake` in the build directory.
- The main CMake process then includes this file and uses it to determine the list of components to include in the build (internal `BUILD_COMPONENTS` variable). The `BUILD_COMPONENTS` variable is sorted so dependencies are listed first, however as the component dependency graph has cycles this cannot be guaranteed for all components. The order should be deterministic given the same set of components and component dependencies.
- The value of `BUILD_COMPONENTS` is logged by CMake as "Component names: "
- Configuration is then evaluated for the components included in the build.
- Each component is included in the build normally and the CMakeLists.txt file is evaluated again to add the component libraries to the build.

Component Dependency Order The order of components in the `BUILD_COMPONENTS` variable determines other orderings during the build:

- Order that *project_include.cmake* files are included into the project.
- Order that the list of header paths is generated for compilation (via `-I` argument). (Note that for a given component's source files, only that component's dependency's header paths are passed to the compiler.)

4.5.9 Overriding Parts of the Project

project_include.cmake

For components that have build requirements which must be evaluated before any component CMakeLists files are evaluated, you can create a file called `project_include.cmake` in the component directory. This CMake file is included when `project.cmake` is evaluating the entire project.

`project_include.cmake` files are used inside ESP-IDF, for defining project-wide build features such as `esptool.py` command line arguments and the `bootloader` "special app".

Unlike component `CMakeLists.txt` files, when including a `project_include.cmake` file the current source directory (`CMAKE_CURRENT_SOURCE_DIR` and working directory) is the project directory. Use the variable `COMPONENT_DIR` for the absolute directory of the component.

Note that `project_include.cmake` isn't necessary for the most common component uses - such as adding include directories to the project, or `LDFLAGS` to the final linking step. These values can be customised via the `CMakeLists.txt` file itself. See *Optional Project Variables* for details.

`project_include.cmake` files are included in the order given in `BUILD_COMPONENTS` variable (as logged by CMake). This means that a component's `project_include.cmake` file will be included after it's all dependencies' `project_include.cmake` files, unless both components are part of a dependency cycle. This is important if a `project_include.cmake` file relies on variables set by another component. See also *above*.

Take great care when setting variables or targets in a `project_include.cmake` file. As the values are included into the top-level project CMake pass, they can influence or break functionality across all components!

KConfig.projbuild

This is an equivalent to `project_include.cmake` for *Component Configuration* KConfig files. If you want to include configuration options at the top-level of menuconfig, rather than inside the "Component Configuration" sub-menu, then these can be defined in the KConfig.projbuild file alongside the `CMakeLists.txt` file.

Take care when adding configuration values in this file, as they will be included across the entire project configuration. Where possible, it's generally better to create a KConfig file for *Component Configuration*.

`project_include.cmake` files are used inside ESP-IDF, for defining project-wide build features such as `esptool.py` command line arguments and the `bootloader` "special app".

4.5.10 Configuration-Only Components

Special components which contain no source files, only `Kconfig.projbuild` and `KConfig`, can have a one-line `CMakeLists.txt` file which calls the function `idf_component_register()` with no arguments specified. This function will include the component in the project build, but no library will be built *and* no header files will be added to any include paths.

4.5.11 Debugging CMake

For full details about CMake and CMake commands, see the CMake v3.5 documentation.

Some tips for debugging the ESP-IDF CMake-based build system:

- When CMake runs, it prints quite a lot of diagnostic information including lists of components and component paths.
- Running `cmake -DDEBUG=1` will produce more verbose diagnostic output from the IDF build system.
- Running `cmake` with the `--trace` or `--trace-expand` options will give a lot of information about control flow. See the cmake command line documentation.

When included from a project CMakeLists file, the `project.cmake` file defines some utility modules and global variables and then sets `IDF_PATH` if it was not set in the system environment.

It also defines an overridden custom version of the built-in CMake `project` function. This function is overridden to add all of the ESP-IDF specific project functionality.

Warning On Undefined Variables

By default, `idf.py` passes the `--warn-uninitialized` flag to CMake so it will print a warning if an undefined variable is referenced in the build. This can be very useful to find buggy CMake files.

If you don't want this behaviour, it can be disabled by passing `--no-warnings` to `idf.py`.

Browse the /tools/cmake/project.cmake file and supporting functions in /tools/cmake/ for more details.

4.5.12 Example Component CMakeLists

Because the build environment tries to set reasonable defaults that will work most of the time, component `CMakeLists.txt` can be very small or even empty (see *Minimal Component CMakeLists*). However, overriding *component variables* is usually required for some functionality.

Here are some more advanced examples of component CMakeLists files.

Adding conditional configuration

The configuration system can be used to conditionally compile some files depending on the options selected in the project configuration.

`Kconfig`:

```
config FOO_ENABLE_BAR
    bool "Enable the BAR feature."
    help
        This enables the BAR feature of the FOO component.
```

`CMakeLists.txt`:

```
 set(srcs "foo.c" "more_foo.c")

 if(CONFIG_FOO_ENABLE_BAR)
     list(APPEND srcs "bar.c")
 endif()

idf_component_register(SRCS "${srcs}"
                       ...)
```

This example makes use of the CMake if function and list APPEND function.

This can also be used to select or stub out an implementation, as such:

`Kconfig`:

```
config ENABLE_LCD_OUTPUT
    bool "Enable LCD output."
    help
        Select this if your board has a LCD.

config ENABLE_LCD_CONSOLE
    bool "Output console text to LCD"
    depends on ENABLE_LCD_OUTPUT
    help
        Select this to output debugging output to the lcd

config ENABLE_LCD_PLOT
    bool "Output temperature plots to LCD"
    depends on ENABLE_LCD_OUTPUT
    help
        Select this to output temperature plots
```

`CMakeLists.txt`:

```
if(CONFIG_ENABLE_LCD_OUTPUT)
   set(srcs lcd-real.c lcd-spi.c)
else()
   set(srcs lcd-dummy.c)
endif()

# We need font if either console or plot is enabled
if(CONFIG_ENABLE_LCD_CONSOLE OR CONFIG_ENABLE_LCD_PLOT)
   list(APPEND srcs "font.c")
endif()

idf_component_register(SRCS "${srcs}"
                       ...)
```

Conditions which depend on the target

The current target is available to CMake files via `IDF_TARGET` variable.

In addition to that, if target `xyz` is used (`IDF_TARGET=xyz`), then Kconfig variable `CONFIG_IDF_TARGET_XYZ` will be set.

Note that component dependencies may depend on `IDF_TARGET` variable, but not on Kconfig variables. Also one can not use Kconfig variables in `include` statements in CMake files, but `IDF_TARGET` can be used in such context.

Source Code Generation

Some components will have a situation where a source file isn't supplied with the component itself but has to be generated from another file. Say our component has a header file that consists of the converted binary data of a BMP file, converted using a hypothetical tool called bmp2h. The header file is then included in as C source file called graphics_lib.c:

```
add_custom_command(OUTPUT logo.h
     COMMAND bmp2h -i ${COMPONENT_DIR}/logo.bmp -o log.h
     DEPENDS ${COMPONENT_DIR}/logo.bmp
     VERBATIM)

add_custom_target(logo DEPENDS logo.h)
add_dependencies(${COMPONENT_LIB} logo)

set_property(DIRECTORY "${COMPONENT_DIR}" APPEND PROPERTY
     ADDITIONAL_MAKE_CLEAN_FILES logo.h)
```

This answer is adapted from the CMake FAQ entry, which contains some other examples that will also work with ESP-IDF builds.

In this example, logo.h will be generated in the current directory (the build directory) while logo.bmp comes with the component and resides under the component path. Because logo.h is a generated file, it should be cleaned when the project is cleaned. For this reason it is added to the ADDITIONAL_MAKE_CLEAN_FILES property.

Note: If generating files as part of the project CMakeLists.txt file, not a component CMakeLists.txt, then use build property `PROJECT_DIR` instead of `${COMPONENT_DIR}` and `${PROJECT_NAME}.elf` instead of `${COMPONENT_LIB}`.)

If a a source file from another component included `logo.h`, then `add_dependencies` would need to be called to add a dependency between the two components, to ensure that the component source files were always compiled in the correct order.

Embedding Binary Data

Sometimes you have a file with some binary or text data that you'd like to make available to your component - but you don't want to reformat the file as C source.

You can specify argument `EMBED_FILES` in the component registration, giving space-delimited names of the files to embed:

```
idf_component_register(...
                       EMBED_FILES server_root_cert.der)
```

Or if the file is a string, you can use the variable `EMBED_TXTFILES`. This will embed the contents of the text file as a null-terminated string:

```
idf_component_register(...
                       EMBED_TXTFILES server_root_cert.pem)
```

The file's contents will be added to the .rodata section in flash, and are available via symbol names as follows:

```
extern const uint8_t server_root_cert_pem_start[] asm("_binary_server_root_cert_
↪pem_start");
extern const uint8_t server_root_cert_pem_end[]   asm("_binary_server_root_cert_
↪pem_end");
```

The names are generated from the full name of the file, as given in `EMBED_FILES`. Characters /, ., etc. are replaced with underscores. The _binary prefix in the symbol name is added by objcopy and is the same for both text and binary files.

To embed a file into a project, rather than a component, you can call the function `target_add_binary_data` like this:

```
target_add_binary_data(myproject.elf "main/data.bin" TEXT)
```

Place this line after the `project()` line in your project CMakeLists.txt file. Replace `myproject.elf` with your project name. The final argument can be `TEXT` to embed a null-terminated string, or `BINARY` to embed the content as-is.

For an example of using this technique, see the "main" component of the file_serving example protocols/http_server/file_serving/main/CMakeLists.txt - two files are loaded at build time and linked into the firmware.

It is also possible embed a generated file:

```
add_custom_command(OUTPUT my_processed_file.bin
                   COMMAND my_process_file_cmd my_unprocessed_file.bin)
target_add_binary_data(my_target "my_processed_file.bin" BINARY)
```

In the example above, `my_processed_file.bin` is generated from `my_unprocessed_file.bin` through some command `my_process_file_cmd`, then embedded into the target.

To specify a dependence on a target, use the `DEPENDS` argument:

```
add_custom_target(my_process COMMAND ...)
target_add_binary_data(my_target "my_embed_file.bin" BINARY DEPENDS my_process)
```

The `DEPENDS` argument to `target_add_binary_data` ensures that the target executes first.

Code and Data Placements

ESP-IDF has a feature called linker script generation that enables components to define where its code and data will be placed in memory through linker fragment files. These files are processed by the build system, and is used to augment the linker script used for linking app binary. See *Linker Script Generation* for a quick start guide as well as a detailed discussion of the mechanism.

Fully Overriding The Component Build Process

Obviously, there are cases where all these recipes are insufficient for a certain component, for example when the component is basically a wrapper around another third-party component not originally intended to be compiled under this build system. In that case, it's possible to forego the ESP-IDF build system entirely by using a CMake feature called ExternalProject. Example component CMakeLists:

```
# External build process for quirc, runs in source dir and
# produces libquirc.a
externalproject_add(quirc_build
    PREFIX ${COMPONENT_DIR}
    SOURCE_DIR ${COMPONENT_DIR}/quirc
    CONFIGURE_COMMAND ""
    BUILD_IN_SOURCE 1
```

(continues on next page)

(continued from previous page)

```
    BUILD_COMMAND make CC=${CMAKE_C_COMPILER} libquirc.a
    INSTALL_COMMAND ""
    )

# Add libquirc.a to the build process
add_library(quirc STATIC IMPORTED GLOBAL)
add_dependencies(quirc quirc_build)

set_target_properties(quirc PROPERTIES IMPORTED_LOCATION
     ${COMPONENT_DIR}/quirc/libquirc.a)
set_target_properties(quirc PROPERTIES INTERFACE_INCLUDE_DIRECTORIES
     ${COMPONENT_DIR}/quirc/lib)

set_directory_properties( PROPERTIES ADDITIONAL_MAKE_CLEAN_FILES
     "${COMPONENT_DIR}/quirc/libquirc.a")
```

(The above CMakeLists.txt can be used to create a component named `quirc` that builds the quirc project using its own Makefile.)

- `externalproject_add` defines an external build system.
  - `SOURCE_DIR`, `CONFIGURE_COMMAND`, `BUILD_COMMAND` and `INSTALL_COMMAND` should always be set. `CONFIGURE_COMMAND` can be set to an empty string if the build system has no "configure" step. `INSTALL_COMMAND` will generally be empty for ESP-IDF builds.
  - Setting `BUILD_IN_SOURCE` means the build directory is the same as the source directory. Otherwise you can set `BUILD_DIR`.
  - Consult the ExternalProject documentation for more details about `externalproject_add()`
- The second set of commands adds a library target, which points to the "imported" library file built by the external system. Some properties need to be set in order to add include directories and tell CMake where this file is.
- Finally, the generated library is added to ADDITIONAL_MAKE_CLEAN_FILES. This means `make clean` will delete this library. (Note that the other object files from the build won't be deleted.)

Note: When using an external build process with PSRAM, remember to add `-mfix-esp32-psram-cache-issue` to the C compiler arguments. See *CONFIG_SPIRAM_CACHE_WORKAROUND* for details of this flag.

ExternalProject dependencies, clean builds CMake has some unusual behaviour around external project builds:

- ADDITIONAL_MAKE_CLEAN_FILES only works when "make" is used as the build system. If Ninja or an IDE build system is used, it won't delete these files when cleaning.
- However, the ExternalProject configure & build commands will *always* be re-run after a clean is run.
- Therefore, there are two alternative recommended ways to configure the external build command:
  1. Have the external `BUILD_COMMAND` run a full clean compile of all sources. The build command will be run if any of the dependencies passed to `externalproject_add` with `DEPENDS` have changed, or if this is a clean build (ie any of `idf.py clean`, `ninja clean`, or `make clean` was run.)
  2. Have the external `BUILD_COMMAND` be an incremental build command. Pass the parameter `BUILD_ALWAYS 1` to `externalproject_add`. This means the external project will be built each time a build is run, regardless of dependencies. This is only recommended if the external project has correct incremental build behaviour, and doesn't take too long to run.

The best of these approaches for building an external project will depend on the project itself, its build system, and whether you anticipate needing to frequently recompile the project.

4.5.13 Custom sdkconfig defaults

For example projects or other projects where you don't want to specify a full sdkconfig configuration, but you do want to override some key values from the ESP-IDF defaults, it is possible to create a file `sdkconfig.defaults`

in the project directory. This file will be used when creating a new config from scratch, or when any new config value hasn't yet been set in the `sdkconfig` file.

To override the name of this file or to specify multiple files, set the `SDKCONFIG_DEFAULTS` environment variable or set `SDKCONFIG_DEFAULTS` in top-level CMakeLists.txt. If specifying multiple files, use semicolon as the list separator. File names not specified as full paths are resolved relative to current project.

Some of the IDF examples include a `sdkconfig.ci` file. This is part of the continuous integration (CI) test framework and is ignored by the normal build process.

Target-dependent sdkconfig defaults

In addition to `sdkconfig.defaults` file, build system will also load defaults from `sdkconfig.defaults.TARGET_NAME` file, where `TARGET_NAME` is the value of `IDF_TARGET`. For example, for `esp32` target, default settings will be taken from `sdkconfig.defaults` first, and then from `sdkconfig.defaults.esp32`.

If `SDKCONFIG_DEFAULTS` is used to override the name of defaults file/files, the name of target-specific defaults file will be derived from `SDKCONFIG_DEFAULTS` value/values using the rule above.

4.5.14 Flash arguments

There are some scenarios that we want to flash the target board without IDF. For this case we want to save the built binaries, esptool.py and esptool write_flash arguments. It's simple to write a script to save binaries and esptool.py.

After running a project build, the build directory contains binary output files (`.bin` files) for the project and also the following flashing data files:

- `flash_project_args` contains arguments to flash the entire project (app, bootloader, partition table, PHY data if this is configured).
- `flash_app_args` contains arguments to flash only the app.
- `flash_bootloader_args` contains arguments to flash only the bootloader.

You can pass any of these flasher argument files to `esptool.py` as follows:

```
python esptool.py --chip esp32 write_flash @build/flash_project_args
```

Alternatively, it is possible to manually copy the parameters from the argument file and pass them on the command line.

The build directory also contains a generated file `flasher_args.json` which contains project flash information, in JSON format. This file is used by `idf.py` and can also be used by other tools which need information about the project build.

4.5.15 Building the Bootloader

The bootloader is built by default as part of `idf.py build`, or can be built standalone via `idf.py bootloader`.

The bootloader is a special "subproject" inside /components/bootloader/subproject. It has its own project CMakeLists.txt file and builds separate .ELF and .BIN files to the main project. However it shares its configuration and build directory with the main project.

The subproject is inserted as an external project from the top-level project, by the file /components/bootloader/project_include.cmake. The main build process runs CMake for the subproject, which includes discovering components (a subset of the main components) and generating a bootloader-specific config (derived from the main `sdkconfig`).

4.5.16 Selecting the Target

ESP-IDF supports multiple targets (chips). A full list of supported targets in your version if ESP-IDF can be seen by running *idf.py –list-targets*.

To select the target before building the project, use `idf.py set-target <target>` command, for example:

```
idf.py set-target esp32s2
```

Important: `idf.py set-target` will clear the build directory and re-generate the `sdkconfig` file from scratch. The old `sdkconfig` file will be saved as `sdkconfig.old`.

Note: The behavior of `idf.py set-target` command is equivalent to:

1. clearing the build directory (`idf.py fullclean`)
2. removing the sdkconfig file (`mv sdkconfig sdkconfig.old`)
3. configuring the project with the new target (`idf.py -DIDF_TARGET=esp32 reconfigure`)

It is also possible to pass the desired `IDF_TARGET` as an environment variable (e.g. `export IDF_TARGET=esp32s2`) or as a CMake variable (e.g. `-DIDF_TARGET=esp32s2` argument to CMake or idf.py). Setting the environment variable is a convenient method if you mostly work with one type of the chip.

To specify the _default_ value of `IDF_TARGET` for a given project, add `CONFIG_IDF_TARGET` value to `sdkconfig.defaults`. For example, `CONFIG_IDF_TARGET="esp32s2"`. This value will be used if `IDF_TARGET` is not specified by other method: using an environment variable, CMake variable, or `idf.py set-target` command.

If the target has not been set by any of these methods, the build system will default to `esp32` target.

4.5.17 Writing Pure CMake Components

The ESP-IDF build system "wraps" CMake with the concept of "components", and helper functions to automatically integrate these components into a project build.

However, underneath the concept of "components" is a full CMake build system. It is also possible to make a component which is pure CMake.

Here is an example minimal "pure CMake" component CMakeLists file for a component named `json`:

```
add_library(json STATIC
cJSON/cJSON.c
cJSON/cJSON_Utils.c)

target_include_directories(json PUBLIC cJSON)
```

- This is actually an equivalent declaration to the IDF `json` component /components/json/CMakeLists.txt.
- This file is quite simple as there are not a lot of source files. For components with a large number of files, the globbing behaviour of ESP-IDF's component logic can make the component CMakeLists style simpler.)
- Any time a component adds a library target with the component name, the ESP-IDF build system will automatically add this to the build, expose public include directories, etc. If a component wants to add a library target with a different name, dependencies will need to be added manually via CMake commands.

4.5.18 Using Third-Party CMake Projects with Components

CMake is used for a lot of open-source C and C++ projects —code that users can tap into for their applications. One of the benefits of having a CMake build system is the ability to import these third-party projects, sometimes

even without modification! This allows for users to be able to get functionality that may not yet be provided by a component, or use another library for the same functionality.

Importing a library might look like this for a hypothetical library `foo` to be used in the `main` component:

```
# Register the component
idf_component_register(...)

# Set values of hypothetical variables that control the build of `foo`
set(FOO_BUILD_STATIC OFF)
set(FOO_BUILD_TESTS OFF)

# Create and import the library targets
add_subdirectory(foo)

# Publicly link `foo` to `main` component
target_link_libraries(main PUBLIC foo)
```

For an actual example, take a look at build_system/cmake/import_lib. Take note that what needs to be done in order to import the library may vary. It is recommended to read up on the library's documentation for instructions on how to import it from other projects. Studying the library's CMakeLists.txt and build structure can also be helpful.

It is also possible to wrap a third-party library to be used as a component in this manner. For example, the mbedtls component is a wrapper for Espressif's fork of mbedtls. See its component CMakeLists.txt .

The CMake variable `ESP_PLATFORM` is set to 1 whenever the ESP-IDF build system is being used. Tests such as `if (ESP_PLATFORM)` can be used in generic CMake code if special IDF-specific logic is required.

Using ESP-IDF components from external libraries

The above example assumes that the external library `foo` (or `tinyxml` in the case of the `import_lib` example) doesn't need to use any ESP-IDF APIs apart from common APIs such as libc, libstdc++, etc. If the external library needs to use APIs provided by other ESP-IDF components, this needs to be specified in the external CMakeLists.txt file by adding a dependency on the library target `idf::<componentname>`.

For example, in the `foo/CMakeLists.txt` file:

```
add_library(foo bar.c fizz.cpp buzz.cpp)

if(ESP_PLATFORM)
  # On ESP-IDF, bar.c needs to include esp_spi_flash.h from the spi_flash component
  target_link_libraries(foo PRIVATE idf::spi_flash)
endif()
```

4.5.19 Using Prebuilt Libraries with Components

Another possibility is that you have a prebuilt static library (`.a` file), built by some other build process.

The ESP-IDF build system provides a utility function `add_prebuilt_library` for users to be able to easily import and use prebuilt libraries:

```
add_prebuilt_library(target_name lib_path [REQUIRES req1 req2 ...] [PRIV_REQUIRES␣
↪req1 req2 ...])
```

where:

- `target_name`- name that can be used to reference the imported library, such as when linking to other targets
- `lib_path`- path to prebuilt library; may be an absolute or relative path to the component directory

Optional arguments `REQUIRES` and `PRIV_REQUIRES` specify dependency on other components. These have the same meaning as the arguments for `idf_component_register`.

Take note that the prebuilt library must have been compiled for the same target as the consuming project. Configuration relevant to the prebuilt library must also match. If not paid attention to, these two factors may contribute to subtle bugs in the app.

For an example, take a look at build_system/cmake/import_prebuilt.

4.5.20 Using ESP-IDF in Custom CMake Projects

ESP-IDF provides a template CMake project for easily creating an application. However, in some instances the user might already have an existing CMake project or may want to create a custom one. In these cases it is desirable to be able to consume IDF components as libraries to be linked to the user's targets (libraries/ executables).

It is possible to do so by using the *build system APIs provided* by tools/cmake/idf.cmake. For example:

```
cmake_minimum_required(VERSION 3.5)
project(my_custom_app C)

# Include CMake file that provides ESP-IDF CMake build system APIs.
include($ENV{IDF_PATH}/tools/cmake/idf.cmake)

# Include ESP-IDF components in the build, may be thought as an equivalent of
# add_subdirectory() but with some additional processing and magic for ESP-IDF␣
↪build
# specific build processes.
idf_build_process(esp32)

# Create the project executable and plainly link the newlib component to it using
# its alias, idf::newlib.
add_executable(${CMAKE_PROJECT_NAME}.elf main.c)
target_link_libraries(${CMAKE_PROJECT_NAME}.elf idf::newlib)

# Let the build system know what the project executable is to attach more targets,␣
↪dependencies, etc.
idf_build_executable(${CMAKE_PROJECT_NAME}.elf)
```

The example in build_system/cmake/idf_as_lib demonstrates the creation of an application equivalent to hello world application using a custom CMake project.

Note: The IDF build system can only set compiler flags for source files that it builds. When an external CMakeLists.txt file is used and PSRAM is enabled, remember to add `-mfix-esp32-psram-cache-issue` to the C compiler arguments. See *CONFIG_SPIRAM_CACHE_WORKAROUND* for details of this flag.

4.5.21 ESP-IDF CMake Build System API

idf-build-commands

```
idf_build_get_property(var property [GENERATOR_EXPRESSION])
```

Retrieve a *build property* *property* and store it in *var* accessible from the current scope. Specifying *GENERATOR_EXPRESSION* will retrieve the generator expression string for that property, instead of the actual value, which can be used with CMake commands that support generator expressions.

```
idf_build_set_property(property val [APPEND])
```

Set a *build property* *property* with value *val*. Specifying *APPEND* will append the specified value to the current value of the property. If the property does not previously exist or it is currently empty, the specified value becomes the first element/member instead.

```
idf_build_component(component_dir)
```

Present a directory *component_dir* that contains a component to the build system. Relative paths are converted to absolute paths with respect to current directory. All calls to this command must be performed before *idf_build_process*.

This command does not guarantee that the component will be processed during build (see the *COMPONENTS* argument description for *idf_build_process*)

```
idf_build_process(target
                  [PROJECT_DIR project_dir]
                  [PROJECT_VER project_ver]
                  [PROJECT_NAME project_name]
                  [SDKCONFIG sdkconfig]
                  [SDKCONFIG_DEFAULTS sdkconfig_defaults]
                  [BUILD_DIR build_dir]
                  [COMPONENTS component1 component2 ...])
```

Performs the bulk of the behind-the-scenes magic for including ESP-IDF components such as component configuration, libraries creation, dependency expansion and resolution. Among these functions, perhaps the most important from a user's perspective is the libraries creation by calling each component's `idf_component_register`. This command creates the libraries for each component, which are accessible using aliases in the form idf::*component_name*. These aliases can be used to link the components to the user's own targets, either libraries or executables.

The call requires the target chip to be specified with *target* argument. Optional arguments for the call include:

- PROJECT_DIR - directory of the project; defaults to CMAKE_SOURCE_DIR
- PROJECT_NAME - name of the project; defaults to CMAKE_PROJECT_NAME
- PROJECT_VER - version/revision of the project; defaults to "1"
- SDKCONFIG - output path of generated sdkconfig file; defaults to PROJECT_DIR/sdkconfig or CMAKE_SOURCE_DIR/sdkconfig depending if PROJECT_DIR is set
- SDKCONFIG_DEFAULTS - list of files containing default config to use in the build (list must contain full paths); defaults to empty. For each value *filename* in the list, the config from file *filename.target*, if it exists, is also loaded.
- BUILD_DIR - directory to place ESP-IDF build-related artifacts, such as generated binaries, text files, components; defaults to CMAKE_BINARY_DIR
- COMPONENTS - select components to process among the components known by the build system (added via *idf_build_component*). This argument is used to trim the build. Other components are automatically added if they are required in the dependency chain, i.e. the public and private requirements of the components in this list are automatically added, and in turn the public and private requirements of those requirements, so on and so forth. If not specified, all components known to the build system are processed.

```
idf_build_executable(executable)
```

Specify the executable *executable* for ESP-IDF build. This attaches additional targets such as dependencies related to flashing, generating additional binary files, etc. Should be called after `idf_build_process`.

```
idf_build_get_config(var config [GENERATOR_EXPRESSION])
```

Get the value of the specified config. Much like build properties, specifying *GENERATOR_EXPRESSION* will retrieve the generator expression string for that config, instead of the actual value, which can be used with CMake commands that support generator expressions. Actual config values are only known after call to `idf_build_process`, however.

idf-build-properties

These are properties that describe the build. Values of build properties can be retrieved by using the build command `idf_build_get_property`. For example, to get the Python interpreter used for the build:

```
idf_build_get_property(python PYTHON)
message(STATUS "The Python intepreter is: ${python}")
```

- BUILD_DIR - build directory; set from `idf_build_process` BUILD_DIR argument
- BUILD_COMPONENTS - list of components included in the build; set by `idf_build_process`
- BUILD_COMPONENT_ALIASES - list of library alias of components included in the build; set by `idf_build_process`
- C_COMPILE_OPTIONS - compile options applied to all components' C source files
- COMPILE_OPTIONS - compile options applied to all components' source files, regardless of it being C or C++
- COMPILE_DEFINITIONS - compile definitions applied to all component source files
- CXX_COMPILE_OPTIONS - compile options applied to all components' C++ source files
- EXECUTABLE - project executable; set by call to `idf_build_executable`
- EXECUTABLE_NAME - name of project executable without extension; set by call to `idf_build_executable`
- EXECUTABLE_DIR - path containing the output executable
- IDF_COMPONENT_MANAGER - the component manager is enabled by default, but if this property is set to `0` it was disabled by the IDF_COMPONENT_MANAGER environment variable
- IDF_PATH - ESP-IDF path; set from IDF_PATH environment variable, if not, inferred from the location of `idf.cmake`
- IDF_TARGET - target chip for the build; set from the required target argument for `idf_build_process`
- IDF_VER - ESP-IDF version; set from either a version file or the Git revision of the IDF_PATH repository
- INCLUDE_DIRECTORIES - include directories for all component source files
- KCONFIGS - list of Kconfig files found in components in build; set by `idf_build_process`
- KCONFIG_PROJBUILDS - list of Kconfig.projbuild files found in components in build; set by `idf_build_process`
- PROJECT_NAME - name of the project; set from `idf_build_process` PROJECT_NAME argument
- PROJECT_DIR - directory of the project; set from `idf_build_process` PROJECT_DIR argument
- PROJECT_VER - version of the project; set from `idf_build_process` PROJECT_VER argument
- PYTHON - Python interpreter used for the build; set from PYTHON environment variable if available, if not "python" is used
- SDKCONFIG - full path to output config file; set from `idf_build_process` SDKCONFIG argument
- SDKCONFIG_DEFAULTS - list of files containing default config to use in the build; set from `idf_build_process` SDKCONFIG_DEFAULTS argument
- SDKCONFIG_HEADER - full path to C/C++ header file containing component configuration; set by `idf_build_process`
- SDKCONFIG_CMAKE - full path to CMake file containing component configuration; set by `idf_build_process`
- SDKCONFIG_JSON - full path to JSON file containing component configuration; set by `idf_build_process`
- SDKCONFIG_JSON_MENUS - full path to JSON file containing config menus; set by `idf_build_process`

idf-component-commands

```
idf_component_get_property(var component property [GENERATOR_EXPRESSION])
```

Retrieve a specified *component*'s *component property*, *property* and store it in *var* accessible from the current scope. Specifying *GENERATOR_EXPRESSION* will retrieve the generator expression string for that property, instead of the actual value, which can be used with CMake commands that support generator expressions.

```
idf_component_set_property(component property val [APPEND])
```

Set a specified *component*'s *component property*, *property* with value *val*. Specifying *APPEND* will append the specified value to the current value of the property. If the property does not previously exist or it is currently empty, the specified value becomes the first element/member instead.

```
idf_component_register([[SRCS src1 src2 ...] | [[SRC_DIRS dir1 dir2 ...] [EXCLUDE_
↪SRCS src1 src2 ...]]
                       [INCLUDE_DIRS dir1 dir2 ...]
                       [PRIV_INCLUDE_DIRS dir1 dir2 ...]
                       [REQUIRES component1 component2 ...]
                       [PRIV_REQUIRES component1 component2 ...]
                       [LDFRAGMENTS ldfragment1 ldfragment2 ...]
                       [REQUIRED_IDF_TARGETS target1 target2 ...]
                       [EMBED_FILES file1 file2 ...]
                       [EMBED_TXTFILES file1 file2 ...]
                       [KCONFIG kconfig]
                       [KCONFIG_PROJBUILD kconfig_projbuild])
```

Register a component to the build system. Much like the `project()` CMake command, this should be called from the component's CMakeLists.txt directly (not through a function or macro) and is recommended to be called before any other command. Here are some guidelines on what commands can **not** be called before `idf_component_register`:

- commands that are not valid in CMake script mode
- custom commands defined in project_include.cmake
- build system API commands except `idf_build_get_property`; although consider whether the property may not have been set yet

Commands that set and operate on variables are generally okay to call before `idf_component_register`.

The arguments for `idf_component_register` include:

- SRCS - component source files used for creating a static library for the component; if not specified, component is a treated as a config-only component and an interface library is created instead.
- SRC_DIRS, EXCLUDE_SRCS - used to glob source files (.c, .cpp, .S) by specifying directories, instead of specifying source files manually via SRCS. Note that this is subject to the *limitations of globbing in CMake*. Source files specified in EXCLUDE_SRCS are removed from the globbed files.
- INCLUDE_DIRS - paths, relative to the component directory, which will be added to the include search path for all other components which require the current component
- PRIV_INCLUDE_DIRS - directory paths, must be relative to the component directory, which will be added to the include search path for this component's source files only
- REQUIRES - public component requirements for the component
- PRIV_REQUIRES - private component requirements for the component; ignored on config-only components
- LDFRAGMENTS - component linker fragment files
- REQUIRED_IDF_TARGETS - specify the only target the component supports
- KCONFIG - override the default Kconfig file
- KCONFIG_PROJBUILD - override the default Kconfig.projbuild file

The following are used for *embedding data into the component*, and is considered as source files when determining if a component is config-only. This means that even if the component does not specify source files, a static library is still created internally for the component if it specifies either:

- EMBED_FILES - binary files to be embedded in the component
- EMBED_TXTFILES - text files to be embedded in the component

idf-component-properties

These are properties that describe a component. Values of component properties can be retrieved by using the build command `idf_component_get_property`. For example, to get the directory of the `freertos` component:

```
idf_component_get_property(dir freertos COMPONENT_DIR)
message(STATUS "The 'freertos' component directory is: ${dir}")
```

- COMPONENT_ALIAS - alias for COMPONENT_LIB used for linking the component to external targets; set by `idf_build_component` and alias library itself is created by `idf_component_register`
- COMPONENT_DIR - component directory; set by `idf_build_component`

- COMPONENT_OVERRIDEN_DIR - contains the directory of the original component if *this component overrides another component*
- COMPONENT_LIB - name for created component static/interface library; set by `idf_build_component` and library itself is created by `idf_component_register`
- COMPONENT_NAME - name of the component; set by `idf_build_component` based on the component directory name
- COMPONENT_TYPE - type of the component, whether LIBRARY or CONFIG_ONLY. A component is of type LIBRARY if it specifies source files or embeds a file
- EMBED_FILES - list of files to embed in component; set from `idf_component_register` EMBED_FILES argument
- EMBED_TXTFILES - list of text files to embed in component; set from `idf_component_register` EMBED_TXTFILES argument
- INCLUDE_DIRS - list of component include directories; set from `idf_component_register` INCLUDE_DIRS argument
- KCONFIG - component Kconfig file; set by `idf_build_component`
- KCONFIG_PROJBUILD - component Kconfig.projbuild; set by `idf_build_component`
- LDFRAGMENTS - list of component linker fragment files; set from `idf_component_register` LDFRAGMENTS argument
- PRIV_INCLUDE_DIRS - list of component private include directories; set from `idf_component_register` PRIV_INCLUDE_DIRS on components of type LIBRARY
- PRIV_REQUIRES - list of private component dependentices; set from `idf_component_register` PRIV_REQUIRES argument
- REQUIRED_IDF_TARGETS - list of targets the component supports; set from `idf_component_register` EMBED_TXTFILES argument
- REQUIRES - list of public component dependencies; set from `idf_component_register` REQUIRES argument
- SRCS - list of component source files; set from SRCS or SRC_DIRS/EXCLUDE_SRCS argument of `idf_component_register`

4.5.22 File Globbing & Incremental Builds

The preferred way to include source files in an ESP-IDF component is to list them manually via SRCS argument to `idf_component_register`:

```
idf_component_register(SRCS library/a.c library/b.c platform/platform.c
                       ...)
```

This preference reflects the CMake best practice of manually listing source files. This could, however, be inconvenient when there are lots of source files to add to the build. The ESP-IDF build system provides an alternative way for specifying source files using `SRC_DIRS`:

```
idf_component_register(SRC_DIRS library platform
                       ...)
```

This uses globbing behind the scenes to find source files in the specified directories. Be aware, however, that if a new source file is added and this method is used, then CMake won't know to automatically re-run and this file won't be added to the build.

The trade-off is acceptable when you're adding the file yourself, because you can trigger a clean build or run `idf.py reconfigure` to manually re-run CMake. However, the problem gets harder when you share your project with others who may check out a new version using a source control tool like Git…

For components which are part of ESP-IDF, we use a third party Git CMake integration module (/tools/cmake/third_party/GetGitRevisionDescription.cmake) which automatically re-runs CMake any time the repository commit changes. This means if you check out a new ESP-IDF version, CMake will automatically re-run.

For project components (not part of ESP-IDF), there are a few different options:

- If keeping your project file in Git, ESP-IDF will automatically track the Git revision and re-run CMake if the revision changes.
- If some components are kept in a third git repository (not the project repository or ESP-IDF repository), you can add a call to the `git_describe` function in a component CMakeLists file in order to automatically trigger re-runs of CMake when the Git revision changes.
- If not using Git, remember to manually run `idf.py reconfigure` whenever a source file may change.
- To avoid this problem entirely, use `SRCS` argument to `idf_component_register` to list all source files in project components.

The best option will depend on your particular project and its users.

4.5.23 Build System Metadata

For integration into IDEs and other build systems, when CMake runs the build process generates a number of metadata files in the `build/` directory. To regenerate these files, run `cmake` or `idf.py reconfigure` (or any other `idf.py` build command).

- `compile_commands.json` is a standard format JSON file which describes every source file which is compiled in the project. A CMake feature generates this file, and many IDEs know how to parse it.
- `project_description.json` contains some general information about the ESP-IDF project, configured paths, etc.
- `flasher_args.json` contains esptool.py arguments to flash the project's binary files. There are also `flash_*_args` files which can be used directly with esptool.py. See *Flash arguments*.
- `CMakeCache.txt` is the CMake cache file which contains other information about the CMake process, toolchain, etc.
- `config/sdkconfig.json` is a JSON-formatted version of the project configuration values.
- `config/kconfig_menus.json` is a JSON-formatted version of the menus shown in menuconfig, for use in external IDE UIs.

JSON Configuration Server

A tool called `confserver.py` is provided to allow IDEs to easily integrate with the configuration system logic. `confserver.py` is designed to run in the background and interact with a calling process by reading and writing JSON over process stdin & stdout.

You can run `confserver.py` from a project via `idf.py confserver` or `ninja confserver`, or a similar target triggered from a different build generator.

For more information about `confserver.py`, see tools/kconfig_new/README.md.

4.5.24 Build System Internals

Build Scripts

The listfiles for the ESP-IDF build system reside in /tools/cmake. The modules which implement core build system functionality are as follows:

- build.cmake - Build related commands i.e. build initialization, retrieving/setting build properties, build processing.
- component.cmake - Component related commands i.e. adding components, retrieving/setting component properties, registering components.
- kconfig.cmake - Generation of configuration files (sdkconfig, sdkconfig.h, sdkconfig.cmake, etc.) from Kconfig files.
- ldgen.cmake - Generation of final linker script from linker fragment files.
- target.cmake - Setting build target and toolchain file.
- utilities.cmake - Miscellaneous helper commands.

Aside from these files, there are two other important CMake scripts in /tools/cmake:

- idf.cmake - Sets up the build and includes the core modules listed above. Included in CMake projects in order to access ESP-IDF build system functionality.
- project.cmake - Includes `idf.cmake` and provides a custom `project()` command that takes care of all the heavy lifting of building an executable. Included in the top-level CMakeLists.txt of standard ESP-IDF projects.

The rest of the files in /tools/cmake are support or third-party scripts used in the build process.

Build Process

This section describes the standard ESP-IDF application build process. The build process can be broken down roughly into four phases:

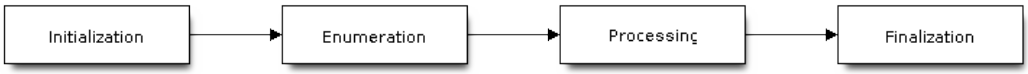

Fig. 3: ESP-IDF Build System Process

Initialization This phase sets up necessary parameters for the build.

- **Upon inclusion of `idf.cmake` in `project.cmake`, the following steps are performed:**
  - Set `IDF_PATH` from environment variable or inferred from path to `project.cmake` included in the top-level CMakeLists.txt.
  - Add /tools/cmake to `CMAKE_MODULE_PATH` and include core modules plus the various helper/third-party scripts.
  - Set build tools/executables such as default Python interpreter.
  - Get ESP-IDF git revision and store as `IDF_VER`.
  - Set global build specifications i.e. compile options, compile definitions, include directories for all components in the build.
  - Add components in components to the build.
- **The initial part of the custom `project()` command performs the following steps:**
  - Set `IDF_TARGET` from environment variable or CMake cache and the corresponding `CMAKE_TOOLCHAIN_FILE` to be used.
  - Add components in `EXTRA_COMPONENTS_DIRS` to the build.
  - Prepare arguments for calling command `idf_build_process()` from variables such as `COMPONENTS`/`EXCLUDE_COMPONENTS`, `SDKCONFIG`, `SDKCONFIG_DEFAULTS`.

The call to `idf_build_process()` command marks the end of this phase.

Enumeration

This phase builds a final list of components to be processed in the build, and is performed in the first half of `idf_build_process()`.

- Retrieve each component's public and private requirements. A child process is created which executes each component's CMakeLists.txt in script mode. The values of `idf_component_register` REQUIRES and PRIV_REQUIRES argument is returned to the parent build process. This is called early expansion. The variable `CMAKE_BUILD_EARLY_EXPANSION` is defined during this step.
- Recursively include components based on public and private requirements.

Processing

This phase processes the components in the build, and is the second half of `idf_build_process()`.

- Load project configuration from sdkconfig file and generate an sdkconfig.cmake and sdkconfig.h header. These define configuration variables/macros that are accessible from the build scripts and C/C++ source/header files, respectively.
- Include each component's `project_include.cmake`.
- Add each component as a subdirectory, processing its CMakeLists.txt. The component CMakeLists.txt calls the registration command, `idf_component_register` which adds source files, include directories, creates component library, links dependencies, etc.

Finalization

This phase is everything after `idf_build_process()`.

- Create executable and link the component libraries to it.
- Generate project metadata files such as project_description.json and display relevant information about the project built.

Browse /tools/cmake/project.cmake for more details.

4.5.25 Migrating from ESP-IDF GNU Make System

Some aspects of the CMake-based ESP-IDF build system are very similar to the older GNU Make-based system. The developer needs to provide values the include directories, source files etc. There is a syntactical difference, however, as the developer needs to pass these as arguments to the registration command, `idf_component_register`.

Automatic Conversion Tool

An automatic project conversion tool is available in /tools/cmake/convert_to_cmake.py. Run this command line tool with the path to a project like this:

```
$IDF_PATH/tools/cmake/convert_to_cmake.py /path/to/project_dir
```

The project directory must contain a Makefile, and GNU Make (`make`) must be installed and available on the PATH.

The tool will convert the project Makefile and any component `component.mk` files to their equivalent `CMakeLists.txt` files.

It does so by running `make` to expand the ESP-IDF build system variables which are set by the build, and then producing equivalent CMakelists files to set the same variables.

Important: When the conversion tool converts a `component.mk` file, it doesn't determine what other components that component depends on. This information needs to be added manually by editing the new component `CMakeLists.txt` file and adding `REQUIRES` and/or `PRIV_REQUIRES` clauses. Otherwise, source files in the component will fail to compile as headers from other components are not found. See *Component Requirements*.

The conversion tool is not capable of dealing with complex Makefile logic or unusual targets. These will need to be converted by hand.

No Longer Available in CMake

Some features are significantly different or removed in the CMake-based system. The following variables no longer exist in the CMake-based build system:

- `COMPONENT_BUILD_DIR`: Use `CMAKE_CURRENT_BINARY_DIR` instead.

- COMPONENT_LIBRARY: Defaulted to $(COMPONENT_NAME).a, but the library name could be overriden by the component. The name of the component library can no longer be overriden by the component.
- CC, LD, AR, OBJCOPY: Full paths to each tool from the gcc xtensa cross-toolchain. Use CMAKE_C_COMPILER, CMAKE_C_LINK_EXECUTABLE, CMAKE_OBJCOPY, etc instead. Full list here.
- HOSTCC, HOSTLD, HOSTAR: Full names of each tool from the host native toolchain. These are no longer provided, external projects should detect any required host toolchain manually.
- COMPONENT_ADD_LDFLAGS: Used to override linker flags. Use the CMake target_link_libraries command instead.
- COMPONENT_ADD_LINKER_DEPS: List of files that linking should depend on. target_link_libraries will usually infer these dependencies automatically. For linker scripts, use the provided custom CMake function target_linker_scripts.
- COMPONENT_SUBMODULES: No longer used, the build system will automatically enumerate all submodules in the ESP-IDF repository.
- COMPONENT_EXTRA_INCLUDES: Used to be an alternative to COMPONENT_PRIV_INCLUDEDIRS for absolute paths. Use PRIV_INCLUDE_DIRS argument to idf_component_register for all cases now (can be relative or absolute).
- COMPONENT_OBJS: Previously, component sources could be specified as a list of object files. Now they can be specified as a list of source files via SRCS argument to *idf_component_register*.
- COMPONENT_OBJEXCLUDE: Has been replaced with EXCLUDE_SRCS argument to idf_component_register. Specify source files (as absolute paths or relative to component directory), instead.
- COMPONENT_EXTRA_CLEAN: Set property ADDITIONAL_MAKE_CLEAN_FILES instead but note *CMake has some restrictions around this functionality*.
- COMPONENT_OWNBUILDTARGET & COMPONENT_OWNCLEANTARGET: Use CMake ExternalProject instead. See *Fully Overriding The Component Build Process* for full details.
- COMPONENT_CONFIG_ONLY: Call idf_component_register without any arguments instead. See *Configuration-Only Components*.
- CFLAGS, CPPFLAGS, CXXFLAGS: Use equivalent CMake commands instead. See *Controlling Component Compilation*.

No Default Values

Unlike in the legacy Make-based build system, the following have no default values:

- Source directories (COMPONENT_SRCDIRS variable in Make, SRC_DIRS argument to idf_component_register in CMake)
- Include directories (COMPONENT_ADD_INCLUDEDIRS variable in Make, INCLUDE_DIRS argument to idf_component_register in CMake)

No Longer Necessary

- In the legacy Make-based build system, it is required to also set COMPONENT_SRCDIRS if COMPONENT_SRCS is set. In CMake, the equivalent is not necessary i.e. specifying SRC_DIRS to idf_component_register if SRCS is also specified (in fact, SRCS is ignored if SRC_DIRS is specified).

Flashing from make

make flash and similar targets still work to build and flash. However, project sdkconfig no longer specifies serial port and baud rate. Environment variables can be used to override these. See *Flashing with ninja or make* for more details.

4.6 Build System (Legacy GNU Make)

Note: Since ESP-IDF V4.0, the default build system is based on CMake. This documentation is for the legacy build system based on GNU Make. Support for this build system may be removed in future major releases.

This document explains the legacy GNU Make Espressif IoT Development Framework build system and the concept of "components"

Read this document if you want to know how to organise an ESP-IDF project using GNU Make build system.

We recommend using the esp-idf-template project as a starting point for your project.

4.6.1 Using the Build System

The esp-idf README file contains a description of how to use the build system to build your project.

4.6.2 Overview

An ESP-IDF project can be seen as an amalgamation of a number of components. For example, for a webserver that shows the current humidity, there could be:

- The ESP32 base libraries (libc, rom bindings etc)
- The Wi-Fi drivers
- A TCP/IP stack
- The FreeRTOS operating system
- A webserver
- A driver for the humidity sensor
- Main code tying it all together

ESP-IDF makes these components explicit and configurable. To do that, when a project is compiled, the build environment will look up all the components in the ESP-IDF directories, the project directories and (optionally) in additional custom component directories. It then allows the user to configure the ESP-IDF project using a a text-based menu system to customize each component. After the components in the project are configured, the build process will compile the project.

Concepts

- A "project" is a directory that contains all the files and configuration to build a single "app" (executable), as well as additional supporting output such as a partition table, data/filesystem partitions, and a bootloader.
- "Project configuration" is held in a single file called sdkconfig in the root directory of the project. This configuration file is modified via `make menuconfig` to customise the configuration of the project. A single project contains exactly one project configuration.
- An "app" is an executable which is built by esp-idf. A single project will usually build two apps - a "project app" (the main executable, ie your custom firmware) and a "bootloader app" (the initial bootloader program which launches the project app).
- "components" are modular pieces of standalone code which are compiled into static libraries (.a files) and linked into an app. Some are provided by esp-idf itself, others may be sourced from other places.

Some things are not part of the project:

- "ESP-IDF" is not part of the project. Instead it is standalone, and linked to the project via the `IDF_PATH` environment variable which holds the path of the `esp-idf` directory. This allows the IDF framework to be decoupled from your project.
- The toolchain for compilation is not part of the project. The toolchain should be installed in the system command line PATH, or the path to the toolchain can be set as part of the compiler prefix in the project configuration.

Example Project

An example project directory tree might look like this:

```
- myProject/
             - Makefile
             - sdkconfig
             - components/ - component1/ - component.mk
                                         - Kconfig
                                         - src1.c
                           - component2/ - component.mk
                                         - Kconfig
                                         - src1.c
                                         - include/ - component2.h
             - main/       - src1.c
                           - src2.c
                           - component.mk

             - build/
```

This example "myProject" contains the following elements:

- A top-level project Makefile. This Makefile sets the `PROJECT_NAME` variable and (optionally) defines other project-wide make variables. It includes the core `$(IDF_PATH)/make/project.mk` makefile which implements the rest of the ESP-IDF build system.
- "sdkconfig" project configuration file. This file is created/updated when "make menuconfig" runs, and holds configuration for all of the components in the project (including esp-idf itself). The "sdkconfig" file may or may not be added to the source control system of the project.
- Optional "components" directory contains components that are part of the project. A project does not have to contain custom components of this kind, but it can be useful for structuring reusable code or including third party components that aren't part of ESP-IDF.
- "main" directory is a special "pseudo-component" that contains source code for the project itself. "main" is a default name, the Makefile variable `COMPONENT_DIRS` includes this component but you can modify this variable (or set `EXTRA_COMPONENT_DIRS`) to look for components in other places.
- "build" directory is where build output is created. After the make process is run, this directory will contain interim object files and libraries as well as final binary output files. This directory is usually not added to source control or distributed with the project source code.

Component directories contain a component makefile - `component.mk`. This may contain variable definitions to control the build process of the component, and its integration into the overall project. See *Component Makefiles* for more details.

Each component may also include a `Kconfig` file defining the *component configuration* options that can be set via the project configuration. Some components may also include `Kconfig.projbuild` and `Makefile.projbuild` files, which are special files for *overriding parts of the project*.

Project Makefiles

Each project has a single Makefile that contains build settings for the entire project. By default, the project Makefile can be quite minimal.

Minimal Example Makefile

```
PROJECT_NAME := myProject

include $(IDF_PATH)/make/project.mk
```

Mandatory Project Variables

- PROJECT_NAME: Name of the project. Binary output files will use this name - ie myProject.bin, myProject.elf.

Optional Project Variables These variables all have default values that can be overridden for custom behaviour. Look in make/project.mk for all of the implementation details.

- PROJECT_PATH: Top-level project directory. Defaults to the directory containing the Makefile. Many other project variables are based on this variable. The project path cannot contain spaces.
- BUILD_DIR_BASE: The build directory for all objects/libraries/binaries. Defaults to $(PROJECT_PATH)/build.
- COMPONENT_DIRS: Directories to search for components. Defaults to *$(IDF_PATH)/components*, *$(PROJECT_PATH)/components*, $(PROJECT_PATH)/main and EXTRA_COMPONENT_DIRS. Override this variable if you don't want to search for components in these places.
- EXTRA_COMPONENT_DIRS: Optional list of additional directories to search for components.
- COMPONENTS: A list of component names to build into the project. Defaults to all components found in the COMPONENT_DIRS directories.
- EXCLUDE_COMPONENTS: Optional list of component names to exclude during the build process. Note that this decreases build time, but not binary size.
- TEST_EXCLUDE_COMPONENTS: Optional list of component names to exclude during the build process of unit tests.

Any paths in these Makefile variables should be absolute paths. You can convert relative paths using $(PROJECT_PATH)/xxx, $(IDF_PATH)/xxx, or use the Make function $(abspath xxx).

These variables should all be set before the line include $(IDF_PATH)/make/project.mk in the Makefile.

Component Makefiles

Each project contains one or more components, which can either be part of esp-idf or added from other component directories.

A component is any directory that contains a component.mk file.

Searching for Components

The list of directories in COMPONENT_DIRS is searched for the project's components. Directories in this list can either be components themselves (ie they contain a *component.mk* file), or they can be top-level directories whose subdirectories are components.

Running the make list-components target dumps many of these variables and can help debug the discovery of component directories.

Multiple components with the same name When esp-idf is collecting all the components to compile, it will do this in the order specified by COMPONENT_DIRS; by default, this means the idf components first, the project components second and optionally the components in EXTRA_COMPONENT_DIRS last. If two or more of these directories contain component subdirectories with the same name, the component in the last place searched is used. This allows, for example, overriding esp-idf components with a modified version by simply copying the component from the esp-idf component directory to the project component tree and then modifying it there. If used in this way, the esp-idf directory itself can remain untouched.

Minimal Component Makefile The minimal component.mk file is an empty file(!). If the file is empty, the default component behaviour is set:

- All source files in the same directory as the makefile (*.c, *.cpp, *.cc, *.S) will be compiled into the component library
- A sub-directory "include" will be added to the global include search path for all other components.
- The component library will be linked into the project app.

See *example component makefiles* for more complete component makefile examples.

Note that there is a difference between an empty `component.mk` file (which invokes default component build behaviour) and no `component.mk` file (which means no default component build behaviour will occur.) It is possible for a component to have no *component.mk* file, if it only contains other files which influence the project configuration or build process.

Preset Component Variables The following component-specific variables are available for use inside `component.mk`, but should not be modified:

- `COMPONENT_PATH`: The component directory. Evaluates to the absolute path of the directory containing `component.mk`. The component path cannot contain spaces.
- `COMPONENT_NAME`: Name of the component. Defaults to the name of the component directory.
- `COMPONENT_BUILD_DIR`: The component build directory. Evaluates to the absolute path of a directory inside *$(BUILD_DIR_BASE)* where this component's source files are to be built. This is also the Current Working Directory any time the component is being built, so relative paths in make targets, etc. will be relative to this directory.
- `COMPONENT_LIBRARY`: Name of the static library file (relative to the component build directory) that will be built for this component. Defaults to `$(COMPONENT_NAME).a`.

The following variables are set at the project level, but exported for use in the component build:

- `PROJECT_NAME`: Name of the project, as set in project Makefile
- `PROJECT_PATH`: Absolute path of the project directory containing the project Makefile.
- `COMPONENTS`: Name of all components that are included in this build.
- `CONFIG_*`: Each value in the project configuration has a corresponding variable available in make. All names begin with `CONFIG_`.
- `CC`, `LD`, `AR`, `OBJCOPY`: Full paths to each tool from the gcc xtensa cross-toolchain.
- `HOSTCC`, `HOSTLD`, `HOSTAR`: Full names of each tool from the host native toolchain.
- `IDF_VER`: ESP-IDF version, retrieved from either `$(IDF_PATH)/version.txt` file (if present) else using git command `git describe`. Recommended format here is single liner that specifies major IDF release version, e.g. `v2.0` for a tagged release or `v2.0-275-g0efaa4f` for an arbitrary commit. Application can make use of this by calling *`esp_get_idf_version()`*.
- `IDF_VERSION_MAJOR`, `IDF_VERSION_MINOR`, `IDF_VERSION_PATCH`: Components of ESP-IDF version, to be used in conditional expressions. Note that this information is less precise than that provided by `IDF_VER` variable. `v4.0-dev-*`, `v4.0-beta1`, `v4.0-rc1` and `v4.0` will all have the same values of `ESP_IDF_VERSION_*` variables, but different `IDF_VER` values.
- `PROJECT_VER`: Project version.
  - If *CONFIG_APP_PROJECT_VER_FROM_CONFIG* option is set, the value of *CONFIG_APP_PROJECT_VER* will be used.
  - Else, if `PROJECT_VER` variable is set in project Makefile file, its value will be used.
  - Else, if the `$PROJECT_PATH/version.txt` exists, its contents will be used as `PROJECT_VER`.
  - Else, if the project is located inside a Git repository, the output of git describe will be used.
  - Otherwise, `PROJECT_VER` will be "1".

If you modify any of these variables inside `component.mk` then this will not prevent other components from building but it may make your component hard to build and/or debug.

Optional Project-Wide Component Variables The following variables can be set inside `component.mk` to control build settings across the entire project:

- `COMPONENT_ADD_INCLUDEDIRS`: Paths, relative to the component directory, which will be added to the include search path for all components in the project. Defaults to `include` if not overridden. If an include directory is only needed to compile this specific component, add it to `COMPONENT_PRIV_INCLUDEDIRS` instead.
- `COMPONENT_ADD_LDFLAGS`: Add linker arguments to the LDFLAGS for the app executable. Defaults to `-l$(COMPONENT_NAME)`. If adding pre-compiled libraries to this directory, add them as absolute paths - ie $(COMPONENT_PATH)/libwhatever.a
- `COMPONENT_DEPENDS`: Optional list of component names that should be compiled before this component. This is not necessary for link-time dependencies, because all component include directories are available at all

times. It is necessary if one component generates an include file which you then want to include in another component. Most components do not need to set this variable.
- COMPONENT_ADD_LINKER_DEPS: Optional list of component-relative paths to files which should trigger a re-link of the ELF file if they change. Typically used for linker script files and binary libraries. Most components do not need to set this variable.

The following variable only works for components that are part of esp-idf itself:

- COMPONENT_SUBMODULES: Optional list of git submodule paths (relative to COMPONENT_PATH) used by the component. These will be checked (and initialised if necessary) by the build process. This variable is ignored if the component is outside the IDF_PATH directory.

Optional Component-Specific Variables The following variables can be set inside `component.mk` to control the build of that component:

- COMPONENT_PRIV_INCLUDEDIRS: Directory paths, must be relative to the component directory, which will be added to the include search path for this component's source files only.
- COMPONENT_EXTRA_INCLUDES: Any extra include paths used when compiling the component's source files. These will be prefixed with '-I' and passed as-is to the compiler. Similar to the COMPONENT_PRIV_INCLUDEDIRS variable, except these paths are not expanded relative to the component directory.
- COMPONENT_SRCDIRS: Directory paths, must be relative to the component directory, which will be searched for source files (`*.cpp`, `*.c`, `*.S`). Defaults to '.', ie the component directory itself. Override this to specify a different list of directories which contain source files.
- COMPONENT_OBJS: Object files to compile. Default value is a .o file for each source file that is found in COMPONENT_SRCDIRS. Overriding this list allows you to exclude source files in COMPONENT_SRCDIRS that would otherwise be compiled. See *Specifying source files*
- COMPONENT_EXTRA_CLEAN: Paths, relative to the component build directory, of any files that are generated using custom make rules in the component.mk file and which need to be removed as part of `make clean`. See *Source Code Generation* for an example.
- COMPONENT_OWNBUILDTARGET & COMPONENT_OWNCLEANTARGET: These targets allow you to fully override the default build behaviour for the component. See *Fully Overriding The Component Makefile* for more details.
- COMPONENT_CONFIG_ONLY: If set, this flag indicates that the component produces no built output at all (ie COMPONENT_LIBRARY is not built), and most other component variables are ignored. This flag is used for IDF internal components which contain only `KConfig.projbuild` and/or `Makefile.projbuild` files to configure the project, but no source files.
- CFLAGS: Flags passed to the C compiler. A default set of CFLAGS is defined based on project settings. Component-specific additions can be made via `CFLAGS +=`. It is also possible (although not recommended) to override this variable completely for a component.
- CPPFLAGS: Flags passed to the C preprocessor (used for .c, .cpp and .S files). A default set of CPPFLAGS is defined based on project settings. Component-specific additions can be made via `CPPFLAGS +=`. It is also possible (although not recommended) to override this variable completely for a component.
- CXXFLAGS: Flags passed to the C++ compiler. A default set of CXXFLAGS is defined based on project settings. Component-specific additions can be made via `CXXFLAGS +=`. It is also possible (although not recommended) to override this variable completely for a component.
- COMPONENT_ADD_LDFRAGMENTS: Paths to linker fragment files for the linker script generation functionality. See *Linker Script Generation*.

To apply compilation flags to a single source file, you can add a variable override as a target, ie:

```
apps/dhcpserver.o: CFLAGS += -Wno-unused-variable
```

This can be useful if there is upstream code that emits warnings.

Component Configuration

Each component can also have a Kconfig file, alongside `component.mk`. This contains contains configuration settings to add to the "make menuconfig" for this component.

These settings are found under the "Component Settings" menu when menuconfig is run.

To create a component KConfig file, it is easiest to start with one of the KConfig files distributed with esp-idf.

For an example, see *Adding conditional configuration*.

Preprocessor Definitions

ESP-IDF build systems adds the following C preprocessor definitions on the command line:

- `ESP_PLATFORM` —Can be used to detect that build happens within ESP-IDF.
- `IDF_VER` —ESP-IDF version, see *Preset Component Variables* for more details.

Build Process Internals

Top Level: Project Makefile

- "make" is always run from the project directory and the project makefile, typically named Makefile.
- The project makefile sets `PROJECT_NAME` and optionally customises other *optional project variables*
- The project makefile includes `$(IDF_PATH)/make/project.mk` which contains the project-level Make logic.
- `project.mk` fills in default project-level make variables and includes make variables from the project configuration. If the generated makefile containing project configuration is out of date, then it is regenerated (via targets in `project_config.mk`) and then the make process restarts from the top.
- `project.mk` builds a list of components to build, based on the default component directories or a custom list of components set in *optional project variables*.
- Each component can set some *optional project-wide component variables*. These are included via generated makefiles named `component_project_vars.mk` - there is one per component. These generated makefiles are included into `project.mk`. If any are missing or out of date, they are regenerated (via a recursive make call to the component makefile) and then the make process restarts from the top.
- *Makefile.projbuild* files from components are included into the make process, to add extra targets or configuration.
- By default, the project makefile also generates top-level build & clean targets for each component and sets up *app* and *clean* targets to invoke all of these sub-targets.
- In order to compile each component, a recursive make is performed for the component makefile.

To better understand the project make process, have a read through the `project.mk` file itself.

Second Level: Component Makefiles

- Each call to a component makefile goes via the `$(IDF_PATH)/make/component_wrapper.mk` wrapper makefile.
- This component wrapper includes all component `Makefile.componentbuild` files, making any recipes, variables etc in these files available to every component.
- The `component_wrapper.mk` is called with the current directory set to the component build directory, and the `COMPONENT_MAKEFILE` variable is set to the absolute path to `component.mk`.
- `component_wrapper.mk` sets default values for all *component variables*, then includes the *component.mk* file which can override or modify these.
- If `COMPONENT_OWNBUILDTARGET` and `COMPONENT_OWNCLEANTARGET` are not defined, default build and clean targets are created for the component's source files and the prerequisite `COMPONENT_LIBRARY` static library file.
- The `component_project_vars.mk` file has its own target in `component_wrapper.mk`, which is evaluated from `project.mk` if this file needs to be rebuilt due to changes in the component makefile or the project configuration.

To better understand the component make process, have a read through the `component_wrapper.mk` file and some of the `component.mk` files included with esp-idf.

Running Make Non-Interactively

When running `make` in a situation where you don't want interactive prompts (for example: inside an IDE or an automated build system) append `BATCH_BUILD=1` to the make arguments (or set it as an environment variable).

Setting `BATCH_BUILD` implies the following:

- Verbose output (same as `V=1`, see below). If you don't want verbose output, also set `V=0`.
- If the project configuration is missing new configuration items (from new components or esp-idf updates) then the project use the default values, instead of prompting the user for each item.
- If the build system needs to invoke `menuconfig`, an error is printed and the build fails.

Advanced Make Targets

- `make app`, `make bootloader`, `make partition table` can be used to build only the app, bootloader, or partition table from the project as applicable.
- `make erase_flash` and `make erase_otadata` will use esptool.py to erase the entire flash chip and the OTA selection setting from the flash chip, respectively.
- `make size` prints some size information about the app. `make size-components` and `make size-files` are similar targets which print more detailed per-component or per-source-file information, respectively.

Debugging The Make Process

Some tips for debugging the esp-idf build system:

- Appending `V=1` to the make arguments (or setting it as an environment variable) will cause make to echo all commands executed, and also each directory as it is entered for a sub-make.
- Running `make -w` will cause make to echo each directory as it is entered for a sub-make - same as `V=1` but without also echoing all commands.
- Running `make --trace` (possibly in addition to one of the above arguments) will print out every target as it is built, and the dependency which caused it to be built.
- Running `make -p` prints a (very verbose) summary of every generated target in each makefile.

For more debugging tips and general make information, see the *GNU Make Manual*.

Warning On Undefined Variables By default, the build process will print a warning if an undefined variable is referenced (like `$(DOES_NOT_EXIST)`). This can be useful to find errors in variable names.

If you don't want this behaviour, it can be disabled in menuconfig's top level menu under *SDK tool configuration*.

Note that this option doesn't trigger a warning if `ifdef` or `ifndef` are used in Makefiles.

Overriding Parts of the Project

Makefile.projbuild For components that have build requirements that must be evaluated in the top-level project make pass, you can create a file called `Makefile.projbuild` in the component directory. This makefile is included when `project.mk` is evaluated.

For example, if your component needs to add to CFLAGS for the entire project (not just for its own source files) then you can set `CFLAGS +=` in Makefile.projbuild.

`Makefile.projbuild` files are used heavily inside esp-idf, for defining project-wide build features such as `esptool.py` command line arguments and the `bootloader` "special app".

Note that `Makefile.projbuild` isn't necessary for the most common component uses - such as adding include directories to the project, or LDFLAGS to the final linking step. These values can be customised via the `component.mk` file itself. See *Optional Project-Wide Component Variables* for details.

Take care when setting variables or targets in this file. As the values are included into the top-level project makefile pass, they can influence or break functionality across all components!

KConfig.projbuild This is an equivalent to `Makefile.projbuild` for *component configuration* KConfig files. If you want to include configuration options at the top-level of menuconfig, rather than inside the "Component Configuration" sub-menu, then these can be defined in the KConfig.projbuild file alongside the `component.mk` file.

Take care when adding configuration values in this file, as they will be included across the entire project configuration. Where possible, it's generally better to create a KConfig file for *component configuration*.

Makefile.componentbuild For components that e.g. include tools to generate source files from other files, it is necessary to be able to add recipes, macros or variable definitions into the component build process of every components. This is done by having a `Makefile.componentbuild` in a component directory. This file gets included in `component_wrapper.mk`, before the `component.mk` of the component is included. As with the Makefile.projbuild, take care with these files: as they're included in each component build, a `Makefile.componentbuild` error may only show up when compiling an entirely different component.

Configuration-Only Components Some special components which contain no source files, only `Kconfig.projbuild` and `Makefile.projbuild`, may set the flag `COMPONENT_CONFIG_ONLY` in the component.mk file. If this flag is set, most other component variables are ignored and no build step is run for the component.

Example Component Makefiles

Because the build environment tries to set reasonable defaults that will work most of the time, component.mk can be very small or even empty (see *Minimal Component Makefile*). However, overriding *component variables* is usually required for some functionality.

Here are some more advanced examples of `component.mk` makefiles:

Adding source directories By default, sub-directories are ignored. If your project has sources in sub-directories instead of in the root of the component then you can tell that to the build system by setting `COMPONENT_SRCDIRS`:

```
COMPONENT_SRCDIRS := src1 src2
```

This will compile all source files in the src1/ and src2/ sub-directories instead.

Specifying source files The standard component.mk logic adds all .S and .c files in the source directories as sources to be compiled unconditionally. It is possible to circumvent that logic and hard-code the objects to be compiled by manually setting the `COMPONENT_OBJS` variable to the name of the objects that need to be generated:

```
COMPONENT_OBJS := file1.o file2.o thing/filea.o thing/fileb.o anotherthing/main.o
COMPONENT_SRCDIRS := . thing anotherthing
```

Note that `COMPONENT_SRCDIRS` must be set as well.

Adding conditional configuration The configuration system can be used to conditionally compile some files depending on the options selected in `make menuconfig`. For this, ESP-IDF has the compile_only_if and compile_only_if_not macros:

`Kconfig`:

```
config FOO_ENABLE_BAR
    bool "Enable the BAR feature."
    help
        This enables the BAR feature of the FOO component.
```

component.mk:

```
$(call compile_only_if,$(CONFIG_FOO_ENABLE_BAR),bar.o)
```

As can be seen in the example, the compile_only_if macro takes a condition and a list of object files as parameters. If the condition is true (in this case: if the BAR feature is enabled in menuconfig) the object files (in this case: bar.o) will always be compiled. The opposite goes as well: if the condition is not true, bar.o will never be compiled. compile_only_if_not does the opposite: compile if the condition is false, not compile if the condition is true.

This can also be used to select or stub out an implementation, as such:

Kconfig:

```
config ENABLE_LCD_OUTPUT
    bool "Enable LCD output."
    help
        Select this if your board has a LCD.

config ENABLE_LCD_CONSOLE
    bool "Output console text to LCD"
    depends on ENABLE_LCD_OUTPUT
    help
        Select this to output debugging output to the lcd

config ENABLE_LCD_PLOT
    bool "Output temperature plots to LCD"
    depends on ENABLE_LCD_OUTPUT
    help
        Select this to output temperature plots
```

component.mk:

```
# If LCD is enabled, compile interface to it, otherwise compile dummy interface
$(call compile_only_if,$(CONFIG_ENABLE_LCD_OUTPUT),lcd-real.o lcd-spi.o)
$(call compile_only_if_not,$(CONFIG_ENABLE_LCD_OUTPUT),lcd-dummy.o)

#We need font if either console or plot is enabled
$(call compile_only_if,$(or $(CONFIG_ENABLE_LCD_CONSOLE),$(CONFIG_ENABLE_LCD_
↪PLOT)), font.o)
```

Note the use of the Make 'or' function to include the font file. Other substitution functions, like 'and' and 'if' will also work here. Variables that do not come from menuconfig can also be used: ESP-IDF uses the default Make policy of judging a variable which is empty or contains only whitespace to be false while a variable with any non-whitespace in it is true.

(Note: Older versions of this document advised conditionally adding object file names to COMPONENT_OBJS. While this still is possible, this will only work when all object files for a component are named explicitely, and will not clean up deselected object files in a make clean pass.)

Source Code Generation Some components will have a situation where a source file isn't supplied with the component itself but has to be generated from another file. Say our component has a header file that consists of the converted binary data of a BMP file, converted using a hypothetical tool called bmp2h. The header file is then included in as C source file called graphics_lib.c:

```
COMPONENT_EXTRA_CLEAN := logo.h

graphics_lib.o: logo.h

logo.h: $(COMPONENT_PATH)/logo.bmp
    bmp2h -i $^ -o $@
```

In this example, graphics_lib.o and logo.h will be generated in the current directory (the build directory) while logo.bmp comes with the component and resides under the component path. Because logo.h is a generated file, it needs to be cleaned when make clean is called which why it is added to the COMPONENT_EXTRA_CLEAN variable.

Cosmetic Improvements Adding logo.h to the `graphics_lib.o` dependencies causes it to be generated before `graphics_lib.c` is compiled.

If a a source file in another component included `logo.h`, then this component's name would have to be added to the other component's `COMPONENT_DEPENDS` list to ensure that the components were built in-order.

Embedding Binary Data Sometimes you have a file with some binary or text data that you'd like to make available to your component - but you don't want to reformat the file as C source.

You can set a variable COMPONENT_EMBED_FILES in component.mk, giving the names of the files to embed in this way:

```
COMPONENT_EMBED_FILES := server_root_cert.der
```

Or if the file is a string, you can use the variable COMPONENT_EMBED_TXTFILES. This will embed the contents of the text file as a null-terminated string:

```
COMPONENT_EMBED_TXTFILES := server_root_cert.pem
```

The file's contents will be added to the .rodata section in flash, and are available via symbol names as follows:

```
extern const uint8_t server_root_cert_pem_start[] asm("_binary_server_root_cert_
↪pem_start");
extern const uint8_t server_root_cert_pem_end[]   asm("_binary_server_root_cert_
↪pem_end");
```

The names are generated from the full name of the file, as given in COMPONENT_EMBED_FILES. Characters /, ., etc. are replaced with underscores. The _binary prefix in the symbol name is added by objcopy and is the same for both text and binary files.

For an example of using this technique, see the "main" component of the file_serving example protocols/http_server/file_serving/main/component.mk - two files are loaded at build time and linked into the firmware.

Code and Data Placements

ESP-IDF has a feature called linker script generation that enables components to define where its code and data will be placed in memory through linker fragment files. These files are processed by the build system, and is used to augment the linker script used for linking app binary. See *Linker Script Generation* for a quick start guide as well as a detailed discussion of the mechanism.

Fully Overriding The Component Makefile

Obviously, there are cases where all these recipes are insufficient for a certain component, for example when the component is basically a wrapper around another third-party component not originally intended to be compiled under this build system. In that case, it's possible to forego the esp-idf build system entirely by setting COMPONENT_OWNBUILDTARGET and possibly COMPONENT_OWNCLEANTARGET and defining your own targets named `build` and `clean` in `component.mk` target. The build target can do anything as long as it creates $(COMPONENT_LIBRARY) for the project make process to link into the app binary.

It is possible for the component build target to build additional libraries and add these to the linker arguments as well. It's even possible for the default $(COMPONENT_LIBRARY) to be a dummy library, however it's used to track the overall build status so the build target should always create it.

Note: When using an external build process with PSRAM, remember to add `-mfix-esp32-psram-cache-issue` to the C compiler arguments. See *CONFIG_SPIRAM_CACHE_WORKAROUND* for details of this flag.

Custom sdkconfig defaults

For example projects or other projects where you don't want to specify a full sdkconfig configuration, but you do want to override some key values from the esp-idf defaults, it is possible to create a file `sdkconfig.defaults` in the project directory. This file will be used when running `make defconfig`, or creating a new config from scratch.

To override the name of this file, set the `SDKCONFIG_DEFAULTS` environment variable.

Save flash arguments

There're some scenarios that we want to flash the target board without IDF. For this case we want to save the built binaries, esptool.py and esptool write_flash arguments. It's simple to write a script to save binaries and esptool.py. We can use command `make print_flash_cmd`, it will print the flash arguments:

```
--flash_mode dio --flash_freq 40m --flash_size detect 0x1000 bootloader/bootloader.
↪bin 0x10000 example_app.bin 0x8000 partition_table_unit_test_app.bin
```

Then use flash arguments as the arguemnts for esptool write_flash arguments:

```
python esptool.py --chip esp32 --port /dev/ttyUSB0 --baud 921600 --before default_
↪reset --after hard_reset write_flash -z --flash_mode dio --flash_freq 40m --
↪flash_size detect 0x1000 bootloader/bootloader.bin 0x10000 example_app.bin␣
↪0x8000 partition_table_unit_test_app.bin
```

4.6.3 Building the Bootloader

The bootloader is built by default as part of "make all", or can be built standalone via "make bootloader-clean". There is also "make bootloader-list-components" to see the components included in the bootloader build.

The component in IDF components/bootloader is special, as the second stage bootloader is a separate .ELF and .BIN file to the main project. However it shares its configuration and build directory with the main project.

This is accomplished by adding a subproject under components/bootloader/subproject. This subproject has its own Makefile, but it expects to be called from the project's own Makefile via some glue in the components/bootloader/Makefile.projectbuild file. See these files for more details.

4.7 Deep Sleep Wake Stubs

ESP32 supports running a "deep sleep wake stub" when coming out of deep sleep. This function runs immediately as soon as the chip wakes up - before any normal initialisation, bootloader, or ESP-IDF code has run. After the wake stub runs, the SoC can go back to sleep or continue to start ESP-IDF normally.

Deep sleep wake stub code is loaded into "RTC Fast Memory" and any data which it uses must also be loaded into RTC memory. RTC memory regions hold their contents during deep sleep.

4.7.1 Rules for Wake Stubs

Wake stub code must be carefully written:

- As the SoC has freshly woken from sleep, most of the peripherals are in reset states. The SPI flash is unmapped.
- The wake stub code can only call functions implemented in ROM or loaded into RTC Fast Memory (see below.)
- The wake stub code can only access data loaded in RTC memory. All other RAM will be unintiailised and have random contents. The wake stub can use other RAM for temporary storage, but the contents will be overwritten when the SoC goes back to sleep or starts ESP-IDF.
- RTC memory must include any read-only data (.rodata) used by the stub.
- Data in RTC memory is initialised whenever the SoC restarts, except when waking from deep sleep. When waking from deep sleep, the values which were present before going to sleep are kept.
- Wake stub code is a part of the main esp-idf app. During normal running of esp-idf, functions can call the wake stub functions or access RTC memory. It is as if these were regular parts of the app.

4.7.2 Implementing A Stub

The wake stub in esp-idf is called `esp_wake_deep_sleep()`. This function runs whenever the SoC wakes from deep sleep. There is a default version of this function provided in esp-idf, but the default function is weak-linked so if your app contains a function named `esp_wake_deep_sleep()` then this will override the default.

If supplying a custom wake stub, the first thing it does should be to call `esp_default_wake_deep_sleep()`.

It is not necessary to implement `esp_wake_deep_sleep()` in your app in order to use deep sleep. It is only necessary if you want to have special behaviour immediately on wake.

If you want to swap between different deep sleep stubs at runtime, it is also possible to do this by calling the `esp_set_deep_sleep_wake_stub()` function. This is not necessary if you only use the default `esp_wake_deep_sleep()` function.

All of these functions are declared in the `esp_sleep.h` header under components/esp32.

4.7.3 Loading Code Into RTC Memory

Wake stub code must be resident in RTC Fast Memory. This can be done in one of two ways.

The first way is to use the `RTC_IRAM_ATTR` attribute to place a function into RTC memory:

```
void RTC_IRAM_ATTR esp_wake_deep_sleep(void) {
    esp_default_wake_deep_sleep();
    // Add additional functionality here
}
```

The second way is to place the function into any source file whose name starts with `rtc_wake_stub`. Files names `rtc_wake_stub*` have their contents automatically put into RTC memory by the linker.

The first way is simpler for very short and simple code, or for source files where you want to mix "normal" and "RTC" code. The second way is simpler when you want to write longer pieces of code for RTC memory.

4.7.4 Loading Data Into RTC Memory

Data used by stub code must be resident in RTC memory.

The data can be placed in RTC Fast memory or in RTC Slow memory which is also used by the ULP.

Specifying this data can be done in one of two ways:

The first way is to use the `RTC_DATA_ATTR` and `RTC_RODATA_ATTR` to specify any data (writeable or read-only, respectively) which should be loaded into RTC memory:

```
RTC_DATA_ATTR int wake_count;

void RTC_IRAM_ATTR esp_wake_deep_sleep(void) {
    esp_default_wake_deep_sleep();
```

(continues on next page)

(continued from previous page)

```
    static RTC_RODATA_ATTR const char fmt_str[] = "Wake count %d\n";
    esp_rom_printf(fmt_str, wake_count++);
}
```

The RTC memory area where this data will be placed can be configured via menuconfig option named `CONFIG_ESP32_RTCDATA_IN_FAST_MEM`. This option allows to keep slow memory area for ULP programs and once it is enabled the data marked with `RTC_DATA_ATTR` and `RTC_RODATA_ATTR` are placed in the RTC fast memory segment otherwise it goes to RTC slow memory (default option). This option depends on the `CONFIG_FREERTOS_UNICORE` because RTC fast memory can be accessed only by PRO_CPU.

The attributes `RTC_FAST_ATTR` and `RTC_SLOW_ATTR` can be used to specify data that will be force placed into RTC_FAST and RTC_SLOW memory respectively. Any access to data marked with `RTC_FAST_ATTR` is allowed by PRO_CPU only and it is responsibility of user to make sure about it.

Unfortunately, any string constants used in this way must be declared as arrays and marked with RTC_RODATA_ATTR, as shown in the example above.

The second way is to place the data into any source file whose name starts with `rtc_wake_stub`.

For example, the equivalent example in `rtc_wake_stub_counter.c`:

```
int wake_count;

void RTC_IRAM_ATTR esp_wake_deep_sleep(void) {
    esp_default_wake_deep_sleep();
    esp_rom_printf("Wake count %d\n", wake_count++);
}
```

The second way is a better option if you need to use strings, or write other more complex code.

To reduce wake-up time use the *CONFIG_BOOTLOADER_SKIP_VALIDATE_IN_DEEP_SLEEP* Kconfig option, see more information in *Fast boot from Deep Sleep*.

4.7.5 CRC Check For Wake Stubs

During deep sleep, all RTC Fast memory areas will be validated with CRC. When ESP32 wakes up from deep sleep, the RTC fast memory will be validated with CRC again. If the validation passes, the wake stubs code will be executed. Otherwise, the normal initialization, bootloader and esp-idf codes will be executed.

Note: When the *CONFIG_ESP_SYSTEM_ALLOW_RTC_FAST_MEM_AS_HEAP* option is enabled, all the RTC fast memory except the wake stubs area is added to the heap.

4.8 Error Handling

4.8.1 Overview

Identifying and handling run-time errors is important for developing robust applications. There can be multiple kinds of run-time errors:

- Recoverable errors:
  - Errors indicated by functions through return values (error codes)
  - C++ exceptions, thrown using `throw` keyword
- Unrecoverable (fatal) errors:
  - Failed assertions (using `assert` macro and equivalent methods, see *Assertions*) and `abort()` calls.

- CPU exceptions: access to protected regions of memory, illegal instruction, etc.
- System level checks: watchdog timeout, cache access error, stack overflow, stack smashing, heap corruption, etc.

This guide explains ESP-IDF error handling mechanisms related to recoverable errors, and provides some common error handling patterns.

For instructions on diagnosing unrecoverable errors, see *Fatal Errors*.

4.8.2 Error codes

The majority of ESP-IDF-specific functions use `esp_err_t` type to return error codes. `esp_err_t` is a signed integer type. Success (no error) is indicated with `ESP_OK` code, which is defined as zero.

Various ESP-IDF header files define possible error codes using preprocessor defines. Usually these defines start with `ESP_ERR_` prefix. Common error codes for generic failures (out of memory, timeout, invalid argument, etc.) are defined in `esp_err.h` file. Various components in ESP-IDF may define additional error codes for specific situations.

For the complete list of error codes, see *Error Code Reference*.

4.8.3 Converting error codes to error messages

For each error code defined in ESP-IDF components, `esp_err_t` value can be converted to an error code name using `esp_err_to_name()` or `esp_err_to_name_r()` functions. For example, passing `0x101` to `esp_err_to_name()` will return "ESP_ERR_NO_MEM" string. Such strings can be used in log output to make it easier to understand which error has happened.

Additionally, `esp_err_to_name_r()` function will attempt to interpret the error code as a standard POSIX error code, if no matching `ESP_ERR_` value is found. This is done using `strerror_r` function. POSIX error codes (such as `ENOENT`, `ENOMEM`) are defined in `errno.h` and are typically obtained from `errno` variable. In ESP-IDF this variable is thread-local: multiple FreeRTOS tasks have their own copies of `errno`. Functions which set `errno` only modify its value for the task they run in.

This feature is enabled by default, but can be disabled to reduce application binary size. See *CONFIG_ESP_ERR_TO_NAME_LOOKUP*. When this feature is disabled, `esp_err_to_name()` and `esp_err_to_name_r()` are still defined and can be called. In this case, `esp_err_to_name()` will return `UNKNOWN ERROR`, and `esp_err_to_name_r()` will return `Unknown error 0xXXXX(YYYYY)`, where `0xXXXX` and `YYYYY` are the hexadecimal and decimal representations of the error code, respectively.

4.8.4 ESP_ERROR_CHECK macro

`ESP_ERROR_CHECK()` macro serves similar purpose as `assert`, except that it checks `esp_err_t` value rather than a `bool` condition. If the argument of `ESP_ERROR_CHECK()` is not equal `ESP_OK`, then an error message is printed on the console, and `abort()` is called.

Error message will typically look like this:

```
ESP_ERROR_CHECK failed: esp_err_t 0x107 (ESP_ERR_TIMEOUT) at 0x400d1fdf

file: "/Users/user/esp/example/main/main.c" line 20
func: app_main
expression: sdmmc_card_init(host, &card)

Backtrace: 0x40086e7c:0x3ffb4ff0 0x40087328:0x3ffb5010 0x400d1fdf:0x3ffb5030␣
↪0x400d0816:0x3ffb5050
```

Note: If *IDF monitor* is used, addresses in the backtrace will be converted to file names and line numbers.

- The first line mentions the error code as a hexadecimal value, and the identifier used for this error in source code. The latter depends on *CONFIG_ESP_ERR_TO_NAME_LOOKUP* option being set. Address in the program where error has occured is printed as well.
- Subsequent lines show the location in the program where `ESP_ERROR_CHECK()` macro was called, and the expression which was passed to the macro as an argument.
- Finally, backtrace is printed. This is part of panic handler output common to all fatal errors. See *Fatal Errors* for more information about the backtrace.

4.8.5 ESP_ERROR_CHECK_WITHOUT_ABORT macro

`ESP_ERROR_CHECK_WITHOUT_ABORT()` macro serves similar purpose as `ESP_ERROR_CHECK`, except that it won't call `abort()`.

4.8.6 ESP_RETURN_ON_ERROR macro

`ESP_RETURN_ON_ERROR()` macro checks the error code, if the error code is not equal *ESP_OK*, it prints the message and returns.

4.8.7 ESP_GOTO_ON_ERROR macro

`ESP_GOTO_ON_ERROR()` macro checks the error code, if the error code is not equal *ESP_OK*, it prints the message, sets the local variable *ret* to the code, and then exits by jumping to *goto_tag*.

4.8.8 ESP_RETURN_ON_FALSE macro

`ESP_RETURN_ON_FALSE()` macro checks the condition, if the condition is not equal *true*, it prints the message and returns with the supplied *err_code*.

4.8.9 ESP_GOTO_ON_FALSE macro

`ESP_GOTO_ON_FALSE()` macro checks the condition, if the condition is not equal *true*, it prints the message, sets the local variable *ret* to the supplied *err_code*, and then exits by jumping to *goto_tag*.

4.8.10 CHECK MACROS Examples

Some examples:

```
static const char* TAG = "Test";

esp_err_t test_func(void)
{
    esp_err_t ret = ESP_OK;

    ESP_ERROR_CHECK(x);                                          // err message␣
↪printed if `x` is not `ESP_OK`, and then `abort()`.
    ESP_ERROR_CHECK_WITHOUT_ABORT(x);                            // err message␣
↪printed if `x` is not `ESP_OK`, without `abort()`.
    ESP_RETURN_ON_ERROR(x, TAG, "fail reason 1");                // err message␣
↪printed if `x` is not `ESP_OK`, and then function returns with code `x`.
    ESP_GOTO_ON_ERROR(x, err, TAG, "fail reason 2");             // err message␣
↪printed if `x` is not `ESP_OK`, `ret` is set to `x`, and then jumps to `err`.
    ESP_RETURN_ON_FALSE(a, err_code, TAG, "fail reason 3");      // err message␣
↪printed if `a` is not `true`, and then function returns with code `err_code`.
```

(continues on next page)

(continued from previous page)

```
    ESP_GOTO_ON_FALSE(a, err_code, err, TAG, "fail reason 4");  // err message␣
↪printed if `a` is not `true`, `ret` is set to `err_code`, and then jumps to␣
↪`err`.

err:
    // clean up
    return ret;
}
```

Note: If the option *CONFIG_COMPILER_OPTIMIZATION_CHECKS_SILENT* in Kconfig is enabled, the err message will be discarded, while the other action works as is.

The `ESP_RETURN_XX` and `ESP_GOTO_xx` macros can't be called from ISR. While there are `xx_ISR` versions for each of them, e.g., *ESP_RETURN_ON_ERROR_ISR*, these macros could be used in ISR.

4.8.11 Error handling patterns

1. Attempt to recover. Depending on the situation, this might mean to retry the call after some time, or attempt to de-initialize the driver and re-initialize it again, or fix the error condition using an out-of-band mechanism (e.g reset an external peripheral which is not responding).
   Example:

```
esp_err_t err;
do {
    err = sdio_slave_send_queue(addr, len, arg, timeout);
    // keep retrying while the sending queue is full
} while (err == ESP_ERR_TIMEOUT);
if (err != ESP_OK) {
    // handle other errors
}
```

2. Propagate the error to the caller. In some middleware components this means that a function must exit with the same error code, making sure any resource allocations are rolled back.
   Example:

```
sdmmc_card_t* card = calloc(1, sizeof(sdmmc_card_t));
if (card == NULL) {
    return ESP_ERR_NO_MEM;
}
esp_err_t err = sdmmc_card_init(host, &card);
if (err != ESP_OK) {
    // Clean up
    free(card);
    // Propagate the error to the upper layer (e.g. to notify the user).
    // Alternatively, application can define and return custom error code.
    return err;
}
```

3. Convert into unrecoverable error, for example using `ESP_ERROR_CHECK`. See *ESP_ERROR_CHECK macro* section for details.
   Terminating the application in case of an error is usually undesirable behaviour for middleware components, but is sometimes acceptable at application level.
   Many ESP-IDF examples use `ESP_ERROR_CHECK` to handle errors from various APIs. This is not the best practice for applications, and is done to make example code more concise.
   Example:

```
ESP_ERROR_CHECK(spi_bus_initialize(host, bus_config, dma_chan));
```

4.8.12 C++ Exceptions

Support for C++ Exceptions in ESP-IDF is disabled by default, but can be enabled using *CONFIG_COMPILER_CXX_EXCEPTIONS* option.

Enabling exception handling normally increases application binary size by a few kB. Additionally it may be necessary to reserve some amount of RAM for exception emergency pool. Memory from this pool will be used if it is not possible to allocate exception object from the heap. Amount of memory in the emergency pool can be set using *CONFIG_COMPILER_CXX_EXCEPTIONS_EMG_POOL_SIZE* variable.

If an exception is thrown, but there is no `catch` block, the program will be terminated by `abort` function, and backtrace will be printed. See *Fatal Errors* for more information about backtraces.

See cxx/exceptions for an example of C++ exception handling.

4.9 ESP-BLE-MESH

Bluetooth® mesh networking enables many-to-many (m:m) device communications and is optimized for creating large-scale device networks.

Devices may relay data to other devices not in direct radio range of the originating device. In this way, mesh networks can span very large physical areas and contain large numbers of devices. It is ideally suited for building automation, sensor networks, and other IoT solutions where tens, hundreds, or thousands of devices need to reliably and securely communicate with one another.

Bluetooth mesh is not a wireless communications technology, but a networking technology. This technology is dependent upon Bluetooth Low Energy (BLE) - a wireless communications protocol stack.

Built on top of Zephyr Bluetooth Mesh stack, the ESP-BLE-MESH implementation supports device provisioning and node control. It also supports such node features as Proxy, Relay, Low power and Friend.

Please see the *ESP-BLE-MESH Architecture* for information about the implementation of ESP-BLE-MESH architecture and *ESP-BLE-MESH API Reference* for information about respective API.

ESP-BLE-MESH is implemented and certified based on the latest Mesh Profile v1.0.1, users can refer here for the certification details of ESP-BLE-MESH.

Note: If you are looking for Wi-Fi based implementation of mesh for ESP32, please check another product by Espressif called ESP-WIF-MESH. For more information and documentation see *ESP-WIFI-MESH*.

4.9.1 Getting Started with ESP-BLE-MESH

This section is intended to help you get started with ESP-BLE-MESH for the hardware based on the ESP32 chip by Espressif.

We are going to demonstrate process of setting and operation of a small ESP-BLE-MESH network of three nodes. This process will cover device provisioning and node configuration, and then sending on/off commands to Generic OnOff Server Models on specific nodes.

If you are new to ESP-IDF, please first set up development environment, compile , flash and run example application following top level ESP-IDF *Get Started* documentation.

What You Need

Hardware:

- Three ESP32 boards, see *options*.

- USB cables to connect the boards.
- Computer configured with ESP-IDF.
- Mobile phone or tablet running Android or iOS.

Software:

- Example application bluetooth/esp_ble_mesh/ble_mesh_node/onoff_server code to load to the ESP32 boards.
- Mobile App: **nRF Mesh** for Android or iOS. Optionally you can use some other Apps:
  - EspBleMesh Android App
  - Silicon Labs Android or iOS App

Installation Step by Step

This is a detailed roadmap to walk you through the installation process.

Step 1. Check Hardware Both ESP32-DevKitC and ESP-WROVER-KIT development boards are supported for ESP-BLE-MESH implementation. You can choose particular board through menuconfig: `idf.py menuconfig > Example Configuration > Board selection for ESP-BLE-MESH`

Note: If you plan to use ESP32-DevKitC, connect a RGB LED to GPIO pins 25, 26 and 27.

Step 2. Configure Software Enter the bluetooth/esp_ble_mesh/ble_mesh_node/onoff_server example directory, run `idf.py menuconfig` to select your board and then run `idf.py build` to compile the example.

Step 3. Upload Application to Nodes After the bluetooth/esp_ble_mesh/ble_mesh_node/onoff_server example is compiled successfully, users can run `idf.py flash` to upload the same generated binary files into each of the three development boards.

Once boards are powered on, the RGB LED on each board should turn **GREEN**.

Step 4. Provision Nodes In this section, we will use the **nRF Mesh Android** App to demonstrate how to provision an unprovisioned device. Users can also get its iOS version from the App Store.

4.1 Scanner The Scanner is App' s functionality to search for unprovisioned devices in range. Open the App, press **Scanner** at the bottom and the search will start. After a short while we should see three unprovisioned devices displayed.

4.2 Identify Users can select any unprovisioned device, then the App will try to set up a connection with the selected device. After the BLE connection is established successfully (sometimes users need to try multiple times to get connected), and proper ESP-BLE-MESH GATT Service is discovered, users can see the **IDENTIFY** interface button on the screen. The IDENTIFY operation can be used to tell users which device is going to be provisioned.

Note: The IDENTIFY operation also needs some cooperation on the device side, then users can see which device is in the provisioning process. Currently when pressing the **IDENTIFY** interface button, no signs can been seen from the device except from the log on the serial monitor.

After the **IDENTIFY** interface button is pressed, users can see the **PROVISION** interface button.

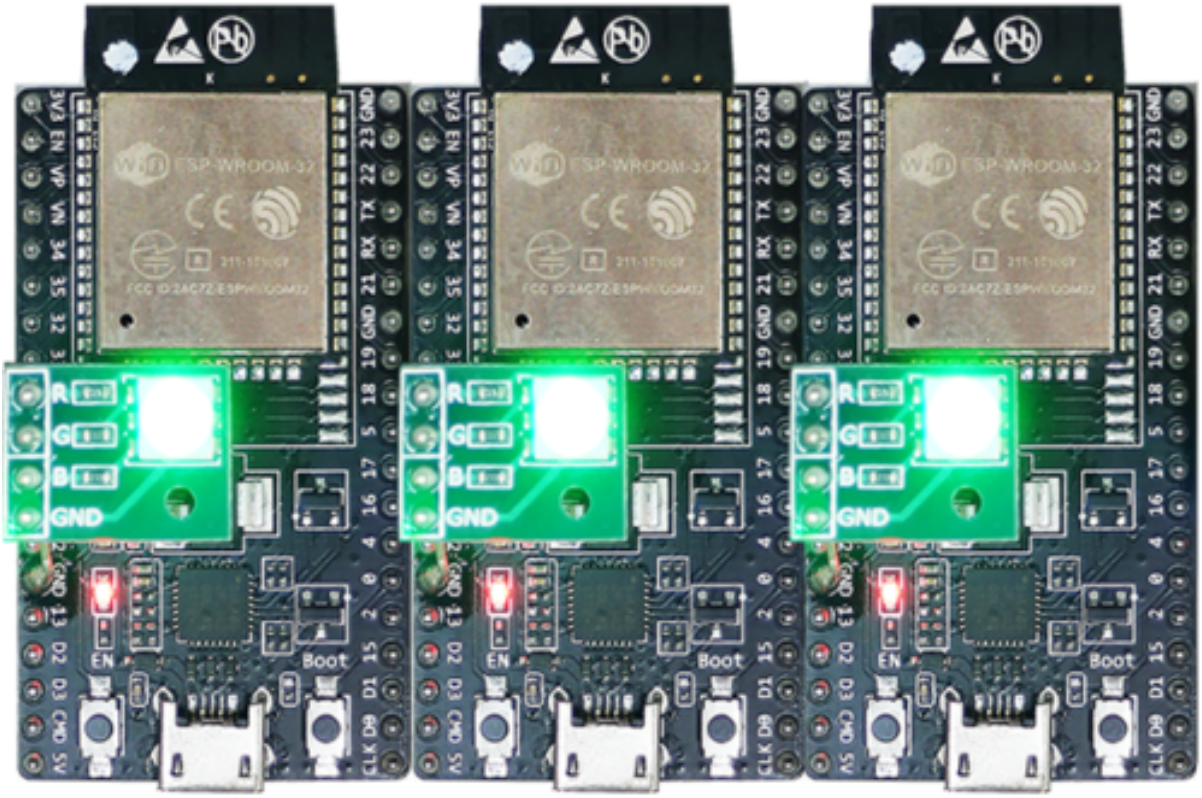

Fig. 4: ESP-BLE-MESH Devices Power On

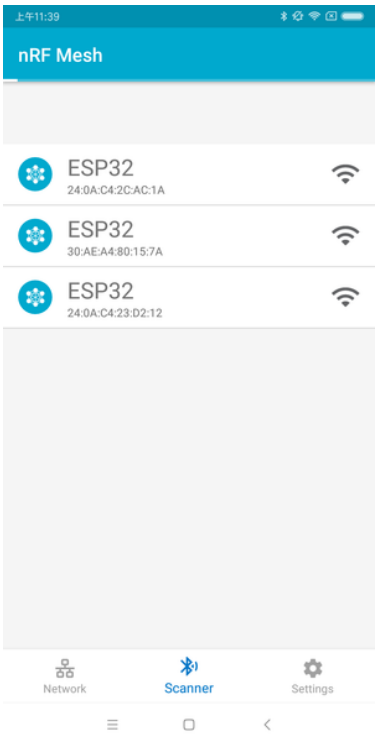

Fig. 5: nRF Mesh - Scanner

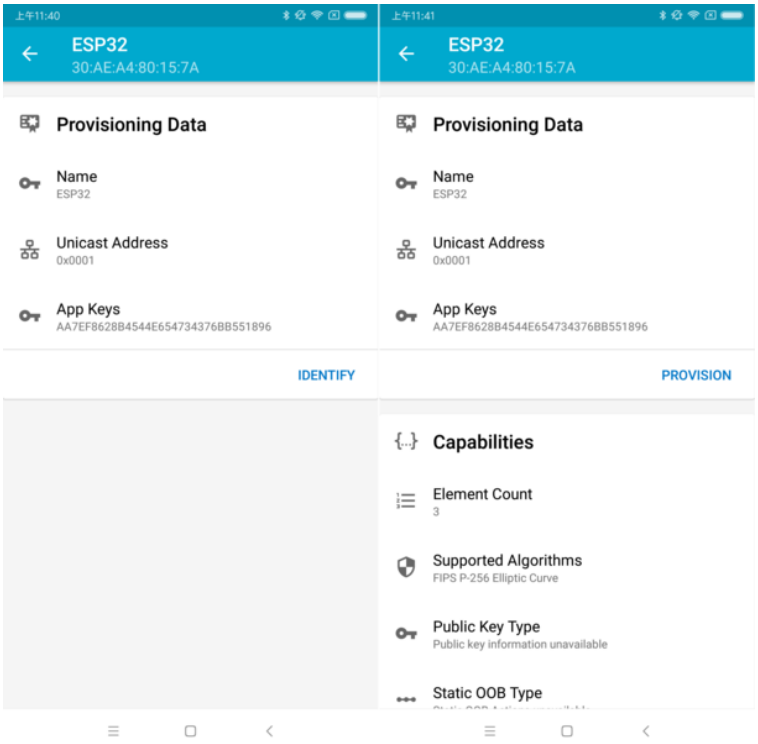

Fig. 6: nRF Mesh - IDENTIFY - PROVISION

4.3 Provision Then, the App will try to provision the unprovisioned device. When the device is provisioned successfully, the RGB LED on the board will turn off, and the App will implement the following procedures:

1. Disconnect with the node
2. Try to reconnect with the node
3. Connect successfully and discover ESP-BLE-MESH GATT Service
4. Get Composition Data of the node and add AppKey to it

When all the procedures are finished, the node is configured properly. And after pressing **OK**, users can see that unicast address is assigned, and Composition Data of the node is decoded successfully.

Sometimes in procedure 2, the App may fail to reconnect with the node. In this case, after pressing **OK**, users can see that only unicast address of the node has been assigned, but no Composition Data has been got. Then users need to press **CONNECT** on the top right, and the previously provisioned node will be displayed on the screen, and users need to choose it and try to connect with the node.

After connecting successfully, the App will show the interface buttons which can be used to get Composition Data and add AppKey.

If the device is the second or the third one which has been provisioned by the App, and after pressing **CONNECT**, users can see two or three nodes on the screen. In this situation, users can choose any device to connect with, once succeed then go back to the main screen to choose the node which needs to be configured.

Here an example of three devices listed.

- The left picture shows that the third device is provisioned successfully, but the App failed to connect with it. When it tries to reconnect with the third node, three nodes are displayed on the App.
- The right picture shows that after connecting with any node successfully, the App displays the information of the three nodes. Users can see that the App has got the Composition Data of the first and the second nodes, but for the third one, only the unicast address has been assigned to it while the Composition Data is unknown.

4.4 Configuration When provisioning and initial configuration are finished, users can start to configure the node, such as binding AppKey with each model with the elements, setting publication information to it, etc.

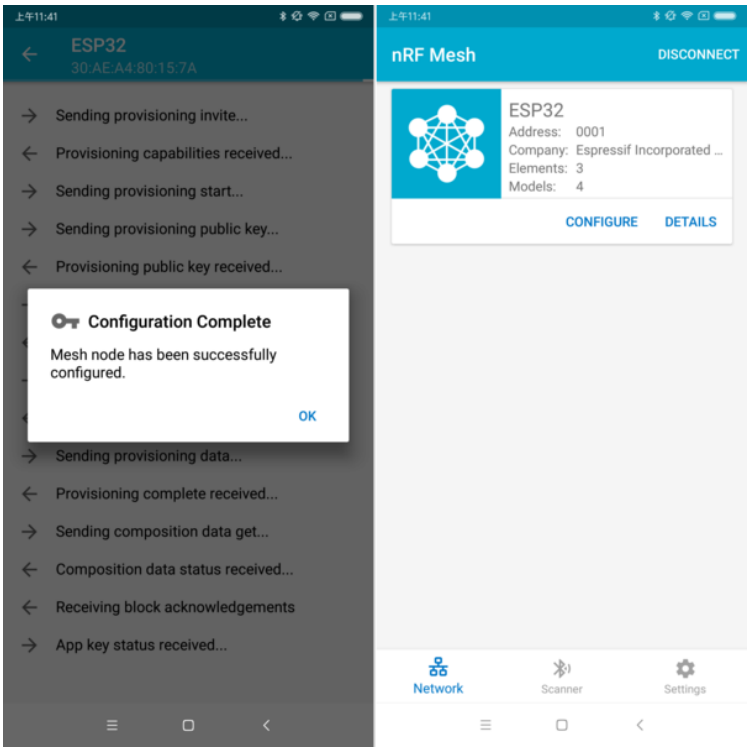

Fig. 7: nRF Mesh - Configuration Complete

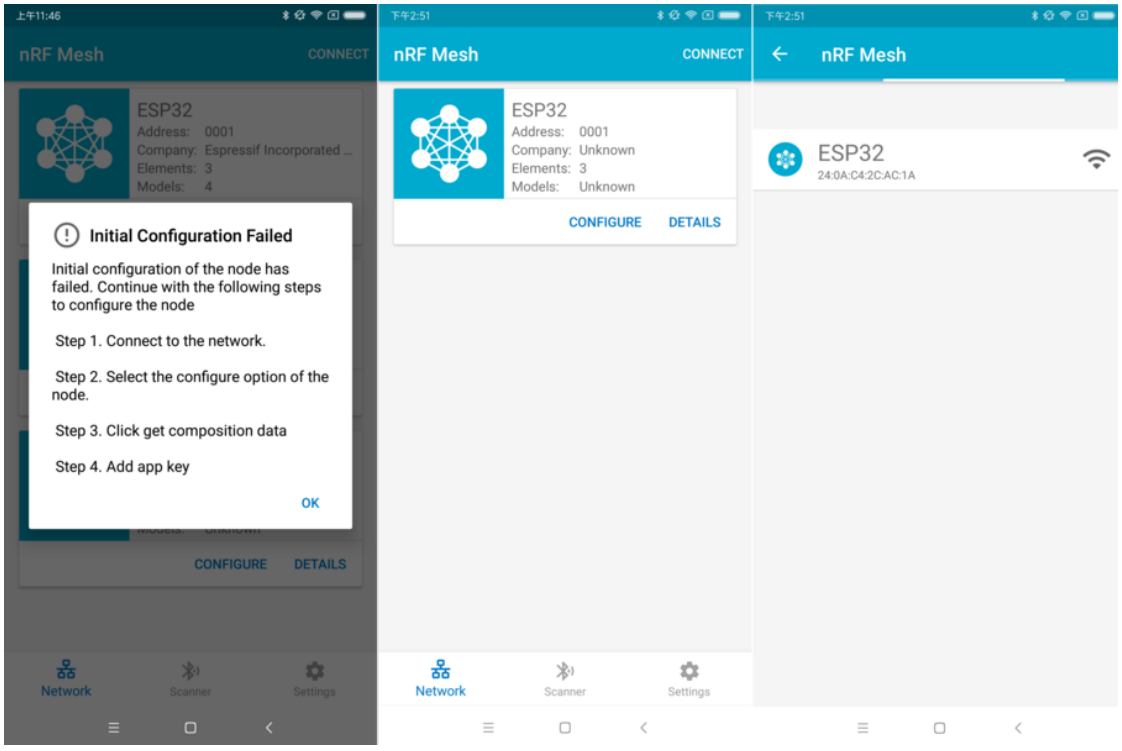

Fig. 8: nRF Mesh - Initial Configuration Failed

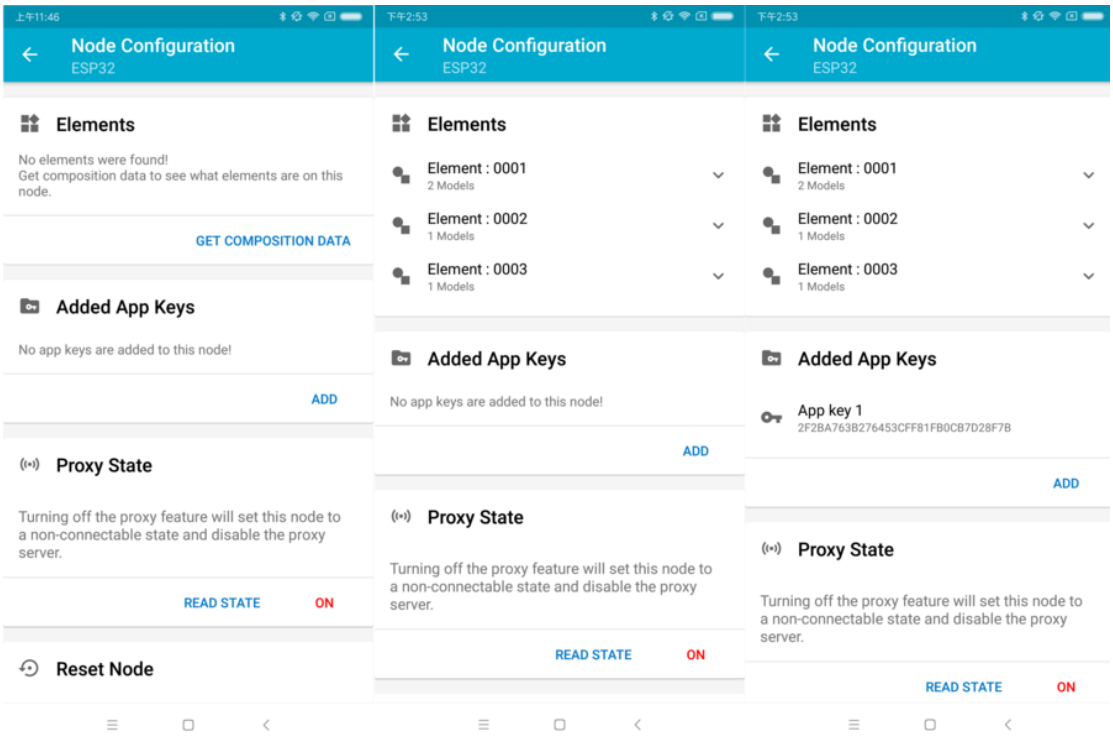

Fig. 9: nRF Mesh - Reconnect - Initial Configuration

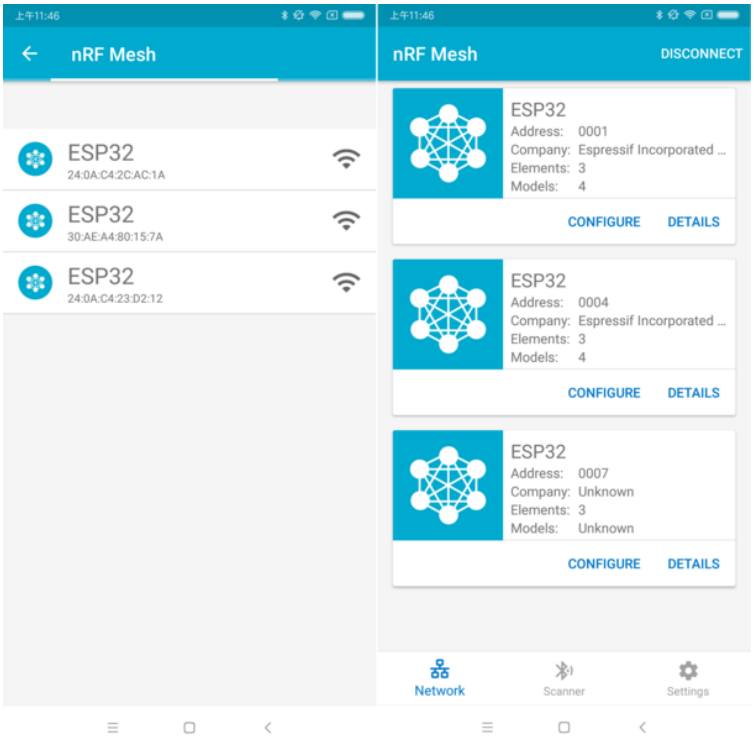

Fig. 10: nRF Mesh - Reconnect - Three Nodes

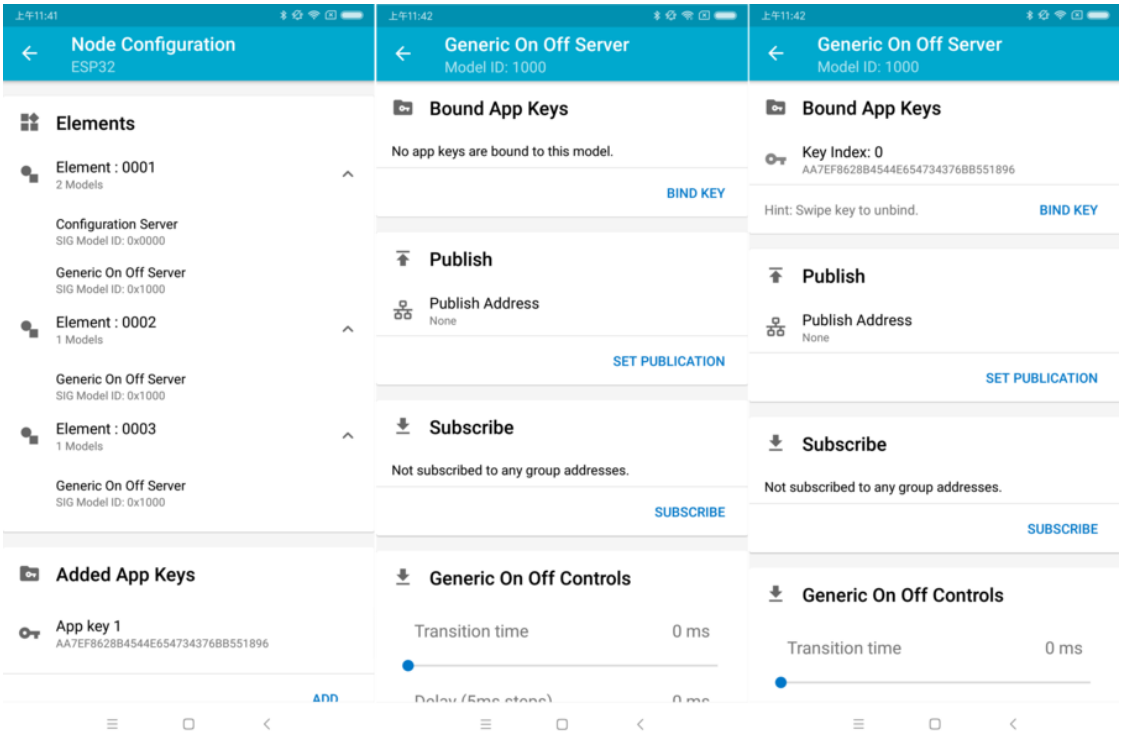

Fig. 11: nRF Mesh - Model Bind AppKey

Example below shows how to bind AppKey with Generic OnOff Server Model within the Primary Element.

Note: No need to bind AppKey with the Configuration Server Model, since it only uses the DevKey to encrypt messages in the Upper Transport Layer.

Step 5. Operate Network After all the Generic OnOff Server Models within the three elements are bound with proper AppKey, users can use the App to turn on/off the RGB LED.

In the bluetooth/esp_ble_mesh/ble_mesh_node/onoff_server example, the first Generic OnOff Server Model is used to control the **RED** color, the second one is used to control the **GREEN** color and the third one is used to control the **BLUE** color.

The following screenshot shows different board with different color on.

Note: For **nRF Mesh** iOS App [version 1.0.4], when the node contains more than one element, the App is not behaving correctly. If users try to turn on/off the second or the third Generic OnOff Server Model, the message sent by the App is destinated to the first Generic OnOff Server Model within the Primary Element.

4.9.2 ESP-BLE-MESH Examples

- ESP-BLE-MESH Node OnOff Server - shows the use of ESP-BLE-MESH as a node having a Configuration Server model and a Generic OnOff Server model. A ESP-BLE-MESH Provisioner can then provision the unprovisioned device and control a RGB LED representing on/off state, see example code .
- ESP-BLE-MESH Node OnOff Client - shows how a Generic OnOff Client model works within a node. The node has a Configuration Server model and a Generic OnOff Client model, see example code .
- ESP-BLE-MESH Provisioner - shows how a device can act as an ESP-BLE-MESH Provisioner to provision devices. The Provisioner has a Configuration Server model, a Configuration Client model and a Generic OnOff Client model, see example code .

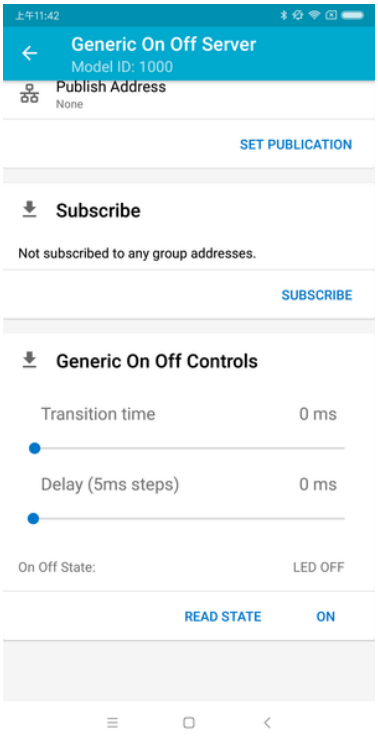

Fig. 12: nRF Mesh - Generic OnOff Control

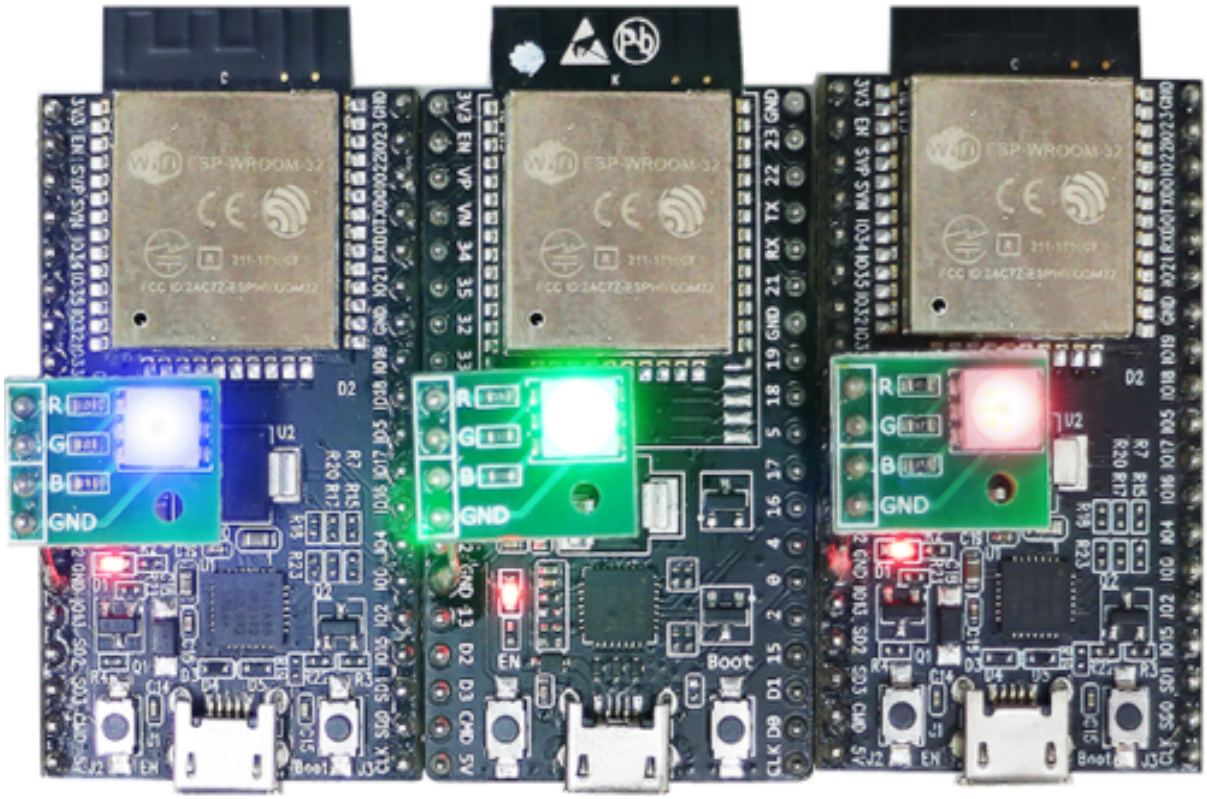

Fig. 13: Three ESP-BLE-MESH Nodes On

- ESP-BLE-MESH Fast Provisioning - Client and Server - this example is used for showing how fast provisioning can be used in order to create a mesh network. It takes no more than 60 seconds to provision 100 devices, see example client code and example server code .
- ESP-BLE-MESH and Wi-Fi Coexistence - an example that demonstrates the Wi-Fi and Bluetooth (BLE/BR/EDR) coexistence feature of ESP32. Simply put, users can use the Wi-Fi while operating Bluetooth, see example code .
- ESP-BLE-MESH Console - an example that implements BLE Mesh basic features. Within this example a node can be scanned and provisioned by Provisioner and reply to get/set message from Provisioner, see example node code .

4.9.3 ESP-BLE-MESH Demo Videos

- Espressif Fast Provisioning using ESP-BLE-MESH App
- Espressif ESP-BLE-MESH and Wi-Fi Coexistence

4.9.4 ESP-BLE-MESH FAQ

- *1. Provisioner Development*
- *2. Node Development*
- *3. ESP-BLE-MESH and Wi-Fi Coexistence*
- *4. Fast Provisioning*
- *5. Log Help*
- *6. Example Help*
- *7. Others*

4.9.5 Related Documents

ESP-BLE-MESH Feature List

Supported Features

Mesh Core

- **Provisioning: Node Role**
  - PB-ADV and PB-GATT
  - OOB Authentication
- **Provisioning: Provisioner Role**
  - PB-ADV and PB-GATT
  - OOB Authentication
- **Networking**
  - Relay
  - Segmentation and Reassembly
  - Key Refresh Procedure
  - IV Update Procedure
  - Friend
  - Low Power
  - Proxy Server
  - Proxy Client
- **Multiple Client Models Run Simultaneously**
  - Support multiple client models send packets to different nodes simultaneously
  - No blocking between client model and server model
- **NVS Storing**
  - Store provisioning and configuration information of ESP-BLE-MESH Node

Mesh Models

- **Foundation models**
  - Configuration Server model
  - Configuration Client model
  - Health Server model
  - Health Client model
- **Generic client models**
  - Generic OnOff Client
  - Generic Level Client
  - Generic Default Transition Time Client
  - Generic Power OnOff Client
  - Generic Power Level Client
  - Generic Battery Client
  - Generic Location Client
  - Generic Property Client
- **Sensor client models**
  - Sensor Client
- **Time and Scenes client models**
  - Time Client
  - Scene Client
  - Scheduler Client
- **Lighting client models**
  - Light Lightness Client
  - Light CTL Client
  - Light HSL Client
  - Light xyL Client
  - Light LC Client
- **Generic server models**
  - Generic OnOff Server
  - Generic Level Server
  - Generic Default Transition Time Server
  - Generic Power OnOff Server
  - Generic Power OnOff Setup Server
  - Generic Power Level Server
  - Generic Power Level Setup Server
  - Generic Battery Server
  - Generic Location Server
  - Generic Location Setup Server
  - Generic User Property Server
  - Generic Admin Property Server
  - Generic Manufacturer Property Server
  - Generic Client Property Server
- **Sensor server models**
  - Sensor Server
  - Sensor Setup Server
- **Time and Scenes server models**
  - Time Server
  - Time Setup Server
  - Scene Server
  - Scene Setup Server
  - Scheduler Server
  - Scheduler Setup Server
- **Lighting server models**
  - Light Lightness Server
  - Light Lightness Setup Server
  - Light CTL Server
  - Light CTL Temperature Server
  - Light CTL Setup Server

  - Light HSL Server
  - Light HSL Hue Server
  - Light HSL Saturation Server
  - Light HSL Setup Server
  - Light xyL Server
  - Light xyL Setup Server
  - Light LC Server
  - Light LC Setup Server

Mesh Applications

- **ESP-BLE-MESH Node**
  - Tutorial
  - Tutorial
  - Example
- **ESP-BLE-MESH Provisioner**
  - Tutorial
  - Example
- **ESP-BLE-MESH Fast Provisioning**
  - Fast Provisioning Client Model Tutorial
  - Fast Provisioning Server Model Tutorial
  - Example
  - Demo Video
- **ESP-BLE-MESH and Wi-Fi Coexistence**
  - Tutorial
  - Example
  - Demo Video
- **ESP-BLE-MESH Console Commands**
  - Example

Future Release Features

Mesh Core

- Provisioner NVS Storage

Mesh Applications

- Fast OTA
- Friendship

ESP-BLE-MESH Architecture

This document introduces ESP-BLE-MESH architecture overview, ESP-BLE-MESH architecture implementation as well as ESP-BLE-MESH auxiliary routines.

- ESP-BLE-MESH Architecture Overview
  - Describes the five major parts of ESP-BLE-MESH architecture and the functionality of each part.
- ESP-BLE-MESH Architecture Implementation
  - Describes the basic functions of ESP-BLE-MESH files, the correspondence between files and ESP-BLE-MESH architecture, and the interface for calling among files.
- ESP-BLE-MESH Auxiliary Routines
  - Describe the auxiliary routines of ESP-BLE-MESH, such as Mesh network management, Mesh features, etc.

1. ESP-BLE-MESH Architecture Overview Currently ESP-BLE-MESH has implemented most functions of Mesh Profile and all the Client Models defined in Mesh Model specification. Those missing functions/models are under development and will be provided soon. ESP-BLE-MESH architecture has been granted the official Bluetooth certification.

ESP-BLE-MESH architecture includes five key parts:

- `Mesh Protocol Stack`
  - `Mesh Networking` is responsible for processing of messages of ESP-BLE-MESH nodes.
  - `Mesh Provisioning` is responsible for provisioning flow of ESP-BLE-MESH devices.
  - `Mesh Models` is responsible for the implementation of SIG-defined models.
- `Network Management`
  - Implements several network management procedures, including node removal procedure, IV Index recovery procedure, etc.
- `Features`
  - Include several ESP-BLE-MESH features, e.g. Low Power feature, Friend feature, Relay feature, etc.
- `Mesh Bearer Layer`
  - Includes `Advertising Bearer` and `GATT Bearer`. The bearer layer is crucial to ESP-BLE-MESH protocol stack which is built on Bluetooth Low-Energy technology, because the protocol stack must make use of the bearer layer to transmit data via the BLE advertising channel and connection channel.
- `Applications`
  - Based on ESP-BLE-MESH protocol stack and `Mesh Models`.
  - By calling API and handling Event, `Applications` interact with `Mesh Networking` and `Mesh Provisioning` in ESP-BLE-MESH protocol stack, as well as a series of Models provided by `Mesh Models`.

1.1 Mesh Protocol Stack

1.1.1 Mesh Networking `Mesh Networking` in the protocol stack architecture implements the following functions:

- The communication between nodes in the Mesh network.
- Encryption and decryption of messages in the Mesh network.
- Management of Mesh network resources (Network Key, IV Index, etc.).
- Segmentation and reassembly of Mesh network messages.
- Model mapping of messages between different models.
- For more features, please see *ESP-BLE-MESH Feature List*.

The implementation of `Mesh Networking` functions is based on hierarchy structure. Functions of each layer are shown in Table 1.1:

Table 1: Table 1.1 Mesh Networking Architecture Description

Layer	Function
Access Layer	Access Layer not only defines the format of application data, but also defines and controls the encryption and decryption of the data packets conducted by Upper Transport Layer.
Upper Transport Layer	Upper Transport Layer encrypts, decrypts, and authenticates application data to and from the access layer; it also handles special messages called "transport control messages", including messages related to "friendship" and heartbeat messages.
Lower Transport Layer	Lower Transport Layer handles segmentation and reassembly of PDU.
Network Layer	Network Layer defines the address type and format of the network messages, and implements the relay function of the device.

1.1.2 Mesh Provisioning `Mesh Provisioning` in the protocol stack architecture implements the following functions:

- Provisioning of unprovisioned devices.

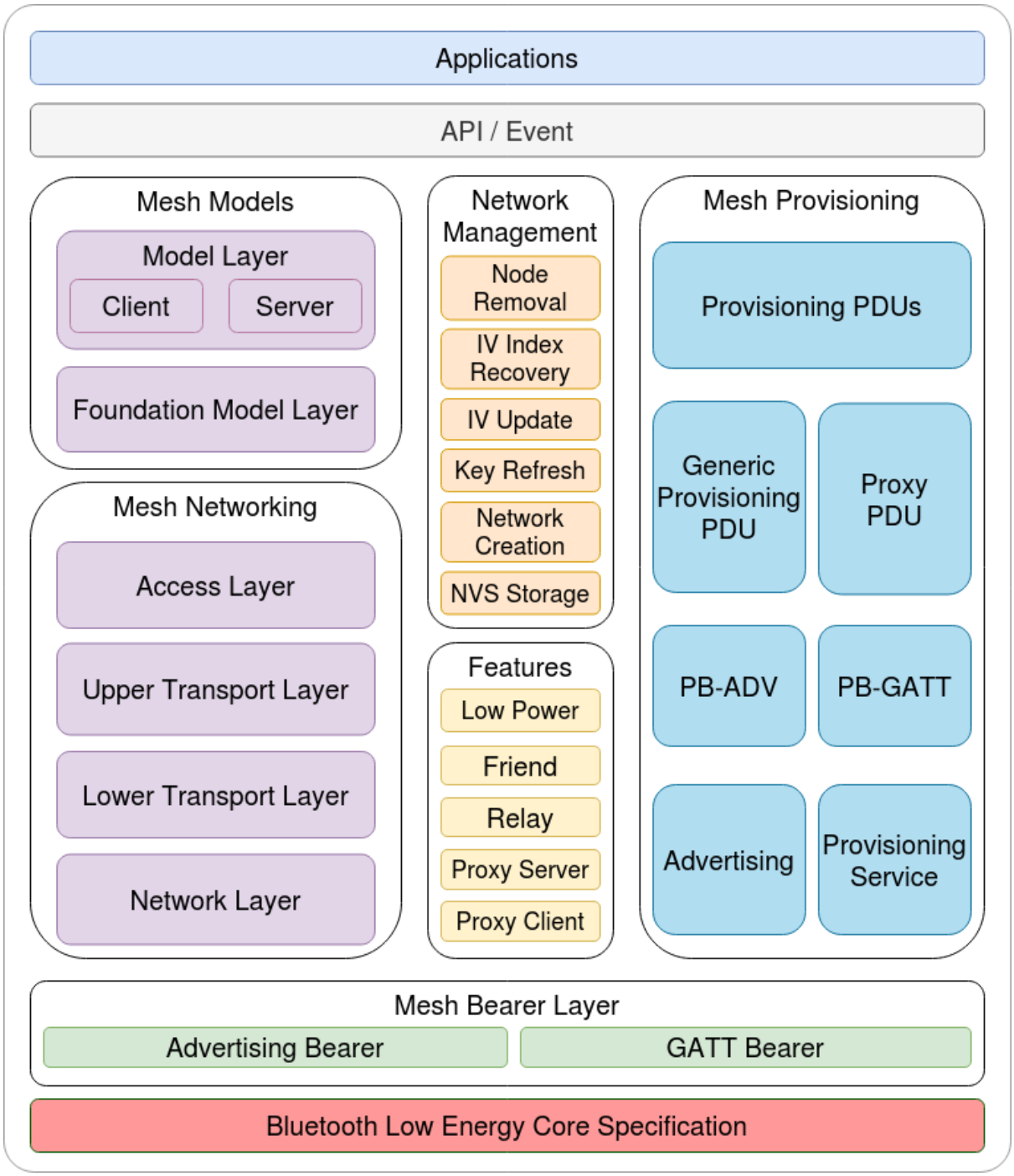

Fig. 14: Figure 1.1 ESP-BLE-MESH Architecture Diagram

- Allocation of Mesh network resources (unicast address, IV Index, NetKey, etc.).
- Four authentication methods support during provisioning.
- For more features, please see *ESP-BLE-MESH Feature List*.

The implementation of `Mesh Provisioning` functions is based on hierarchy structure. Functions of each layer are shown in Table 1.2:

Table 2: Table 1.2 Mesh Provisioning Architecture Description

Layer	Function
Provisioning PDUs	Provisioning PDUs from different layers are handled using provisioning protocol.
Generic Provisioning PDU/Proxy PDU	The Provisioning PDUs are transmitted to an unprovisioned device using a Generic Provisioning layer or Proxy protocol layer.
PB-ADV/PB-GATT	These layers define how the Provisioning PDUs are transmitted as transactions that can be segmented and reassembled.
Advertising/Provisioning Service	The provisioning bearers define how sessions are established such that the transactions from the generic provisioning layer can be delivered to a single device.

1.1.3 Mesh Models `Mesh Models` in the protocol stack architecture implements the following functions:

- Configuration Client/Server Models
- Health Client/Server Models
- Generic Client/Server Models
- Sensor Client/Server Models
- Time and Scenes Client/Server Models
- Lighting Client/Server Models

Functions of each layer are shown in Table 1.3:

Table 3: Table 1.3 Mesh Models Architecture Description

Layer	Function
Model Layer	Model Layer implements models used to standardize the operation of typical user scenarios, including Generic Client/Server Models, Sensor Client/Server Models, Time and Scenes Client/Server Models, Lighting Client/Server Models and several vendor models.
Foundation Model Layer	Foundation Model Layer implements models related to ESP-BLE-MESH configuration, management, self diagnosis, etc.

1.2 Mesh Network Management `Network Management` implements the following functions:

- Node removal procedure is used to remove a node from the network.
- IV Index recovery procedure is used to recover a node's IV Index.
- IV update procedure is used to update the nodes' IV Index.
- Key refresh procedure is used to update the nodes' NetKey, AppKey, etc.
- Network creation procedure is used to create a mesh network.
- NVS storage is used to store node's networking information.

1.3 Mesh Features `Features` includes the following options:

- Low Power feature is used to reduce node's power consumption.
- Friend feature is used to store messages for Low Power nodes.
- Relay feature is used to relay/forward Network PDUs received by a node over the advertising bearer.
- Proxy Server/Client are two node roles in proxy protocol, which enable nodes to send and receive Network PDUs, mesh beacons, proxy configuration messages and Provisioning PDUs over a connection-oriented bearer.

1.4 Mesh Bearer Layer `Bearers` in the protocol stack architecture are responsible for passing of data between ESP-BLE-MESH protocol stack and Bluetooth Low Energy Core.

Bearers can be taken as a carrier layer based on Bluetooth Low Energy Core, which implements the function of receiving and transmitting data for the ESP-BLE-MESH protocol stack.

Table 4: Table 1.3 Mesh Bearers Description

Layer	Function
GATT Bearer	The GATT Bearer uses the Proxy protocol to transmit and receive Proxy PDUs between two devices over a GATT connection.
Advertising Bearer	When using the Advertising Bearer, a mesh packet shall be sent in the Advertising Data of a Bluetooth Low Energy advertising PDU using the Mesh Message AD Type.

1.5 Mesh Applications The Applications in the protocol stack architecture implement the corresponding functions by calling the API provided by the ESP-BLE-MESH protocol stack and processing the Event reported by the protocol stack. There are some common applications, such as gateway, lighting and etc.

Interaction between application layer (Applications) and API / Event

- Application layer calls API
  - Call the provisioning-related API for provisioning.
  - Call the model-related API to send messages.
  - Call the device-attributes-related API to get local information about the device.
- Application layer processes Event
  The application layer is designed based on events, which take parameters to the application layer. Events are mainly divided into two categories.
  - **The events completed by calling API.**
    - Such as nodes sending messages.
  - **The events that the protocol stack actively reports to the application layer.**
    - The Event that the protocol stack actively reports.
    - The Event that Model actively reports.
- The event is reported by the callback function registered by the application layer, and the callback function also contains the corresponding processing of the event.

Interaction between API / Event and ESP-BLE-MESH protocol stack

- API used by user mainly calls functions provided by Mesh Networking, Mesh Provisioning and Mesh Models.
- The interaction between API / Event and the protocol stack does not operate across the hierarchy of the protocol stack. For example, API does not call functions related to Network Layer.

2. ESP-BLE-MESH Architecture Implementation The design and implementation of ESP-BLE-MESH architecture is based on layers and modules. In details, Section 2.1 (Mesh Networking Implementation), Section 2.2 (Mesh Provisioning Implementation) and Section 2.3 (Mesh Bearers Implementation) are based on layers, and Section 2.4 (Mesh Models Implementation) is on modules.

- **Layer-based Approach**: With Layer-based approach, the architecture is designed according to the layers specified in the Mesh Profile Specification. Each layer has its unique files which include APIs of this layer and etc. The specific design is shown in Figure 2.1.
- **Module-based Approach**: Every file implements an independent function that can be called by other programs.

The design of ESP-BLE-MESH architecture uses layer-based approach. The sequence of layers which data packets are processed through is fixed, i.e., the processing of packets will form a message flow. Thus, we could see flows of messages from the Protocol Stack Interface Diagram in Figure 2.1.

2.1 Mesh Protocol Stack Implementation

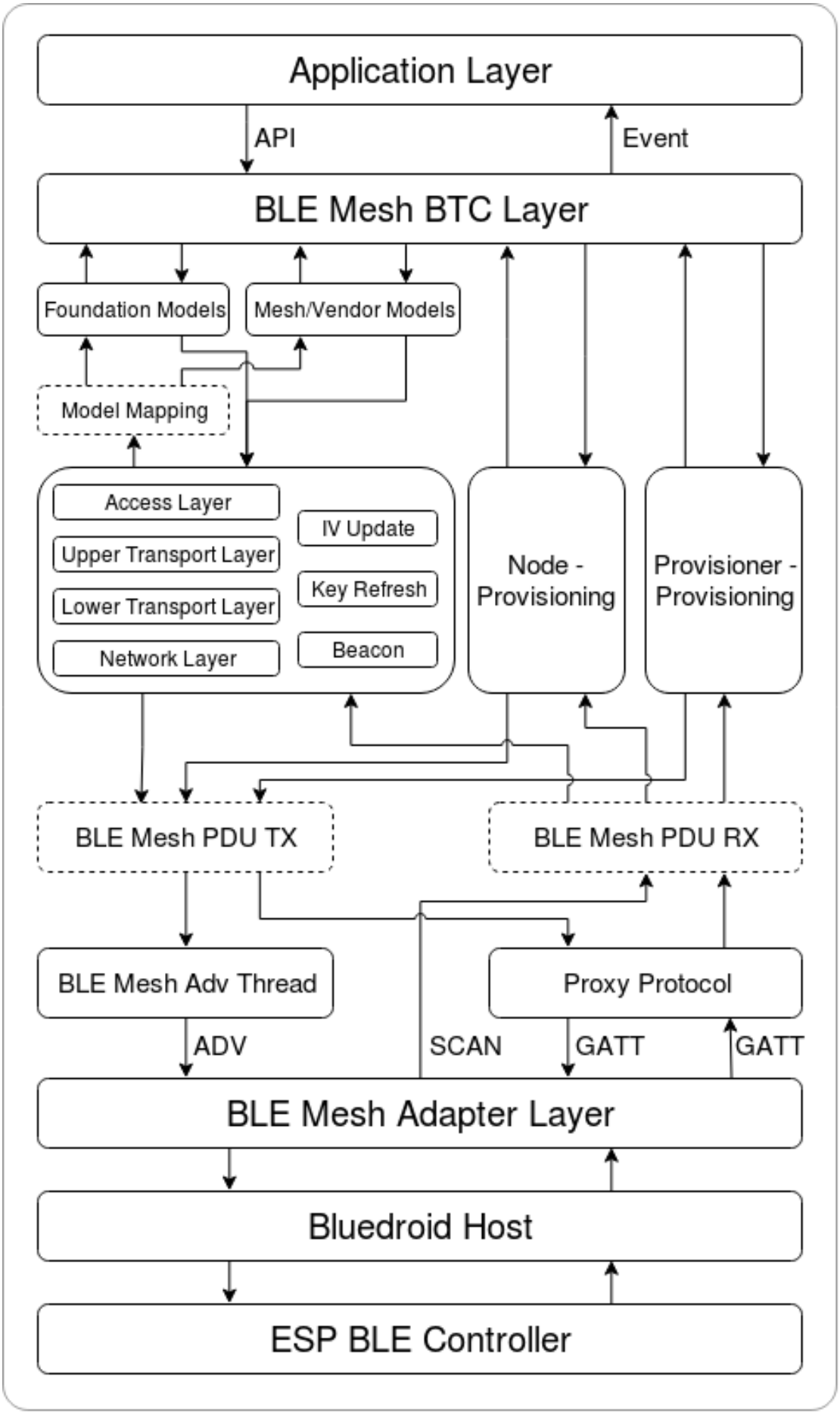

Fig. 15: Figure 2.1 ESP-BLE-MESH Architecture Implementation Diagram

2.1.1 Mesh Networking Implementation The list of files and the functions implemented in each file in `Mesh Networking` are shown in Table 2.1:

Table 5: Table 2.1 Mesh Networking File Description :widths: 40 150 :header-rows: 1

File	Functionality
access.c	ESP-BLE-MESH Access Layer
transport.c	ESP-BLE-MESH Lower/Upper Transport Layer
net.c	ESP-BLE-MESH Network Layer
adv.c	A task used to send ESP-BLE-MESH advertising packets, a callback used to handle received advertising packets and APIs used to allocate adv buffers

2.1.2 Mesh Provisioning Implementation The implementation of Mesh Provisioning is divided into two chunks due to the Node/Provisioner coexistence.

Specific files that provide implementation of provisioning of Node are shown in Table 2.2:

Table 6: Table 2.2 Mesh Provisioning (Node) File Description

File	Functionality
prov.c	ESP-BLE-MESH Node provisioning (PB-ADV & PB-GATT)
proxy_server.c	ESP-BLE-MESH Proxy Server related functionalities
beacon.c	APIs used to handle ESP-BLE-MESH Beacons

Specific files that implement functions of Provisioner are shown in Table 2.3:

Table 7: Table 2.3 Mesh Provisioning (Provisioner) File Description

File	Functionality
provisioner_prov.c	ESP-BLE-MESH Provisioner provisioning (PB-ADV & PB-GATT)
proxy_client.c	ESP-BLE-MESH Proxy Client related functionalities
provisioner_main.c	ESP-BLE-MESH Provisioner networking related functionalities

2.1.3 Mesh Models Implementation Mesh Models are used to implement the specific functions of model in nodes. Server model is used to maintain node status. Client model is used to obtain and modify node state.

Table 8: Table 2.4 Mesh Models File Description

File	Functionality
cfg_cli.c	Send Configuration Client messages and receive corresponding response messages
cfg_srv.c	Receive Configuration Client messages and send proper response messages
health_cli.c	Send Health Client messages and receive corresponding response messages
health_srv.c	Receive Health Client messages and send proper response messages
client_common.c	ESP-BLE-MESH model related operations
generic_client.c	Send ESP-BLE-MESH Generic Client messages and receive corresponding response messages
lighting_client.c	Send ESP-BLE-MESH Lighting Client messages and receive corresponding response messages
sensor_client.c	Send ESP-BLE-MESH Sensor Client messages and receive corresponding response messages
time_scene_client.c	Send ESP-BLE-MESH Time Scene Client messages and receive corresponding response messages
generic_server.c	Receive ESP-BLE-MESH Generic Client messages and send corresponding response messages
lighting_server.c	Receive ESP-BLE-MESH Lighting Client messages and send corresponding response messages
sensor_server.c	Receive ESP-BLE-MESH Sensor Client messages and send corresponding response messages
time_scene_server.c	Receive ESP-BLE-MESH Time Scene Client messages and send corresponding response messages

2.2 Mesh Bearers Implementation Portability is fully considered in the implementation of Mesh Bearers. When the ESP-BLE-MESH protocol stack is being ported to other platforms, users only need to modify mesh_bearer_adapt.c (example of NimBLE version).

Table 9: Table 2.5 Mesh Bearers File Description

File	Functionality
mesh_bearer_adapt.c	ESP-BLE-MESH Bearer Layer adapter , This file provides the interfaces used to receive and send ESP-BLE-MESH ADV & GATT related packets.

Note: mesh_bearer_adapt.c is the implementation of `Advertising Bearer` and `GATT Bearer` in Mesh Networking framework.

2.3 Mesh Applications Implementation We have provided a series of application examples for customer development, and users can develop products based on *ESP-BLE-MESH Examples*.

3. Auxiliary Routine Auxiliary routine refers to optional functions in the ESP-BLE-MESH protocol stack. The design of the auxiliary routine generally implement the truncation of code through *CONFIG_BLE_MESH*.

3.1 Features

- Low Power
- Friend
- Relay
- Proxy Client/Server

3.2 Network Management

- Node Removal procedure
- IV Index Recovery procedure
- IV Update procedure
- Key Refresh procedure
- Network Creation procedure
- NVS Storage

3.3 Auxiliary Routine Implementation When adopting the design of independent module, the two main factors should be considered:

- The module can not be implemented hierarchically, and it can be completely independent, which means it does not rely on the implementation of other modules.
- The functions in the module will be used repeatedly, so it is reasonable to design it into a module. Independent module is shown in Table 3.1:

Table 10: Table 3.1 Module File Description

File	Functionality
lpn.c	ESP-BLE-MESH Low Power functionality
friend.c	ESP-BLE-MESH Friend functionality
net.c	ESP-BLE-MESH Relay feature, network creation, IV Update procedure, IV Index recovery procedure, Key Refresh procedure related functionalities
proxy_server.c	ESP-BLE-MESH Proxy Server related functionalities
proxy_client.c	ESP-BLE-MESH Proxy Client related functionalities
settings.c	ESP-BLE-MESH NVS storage functionality
main.c	ESP-BLE-MESH stack initialize, stack enable, node removal related functionalities

ESP-BLE-MESH FAQ

This document provides a summary of frequently asked questions about developing with ESP-BLE-MESH, and is divided into seven sections:

- *1. Provisioner Development*
- *2. Node Development*
- *3. ESP-BLE-MESH and Wi-Fi Coexistence*
- *4. Fast Provisioning*
- *5. Log Help*
- *6. Example Help*
- *7. Others*

Users could refer to the sections for quick answer to their questions. This document will be updated based on the feedback collected via various channels.

1. Provisioner Development Generally, a Provisioner is used to provision unprovisioned devices and form a mesh network. And after provisioning, roles of the unprovisioned devices will be changed to those of a node.

1.1 What is the flow for an unprovisioned device to join ESP-BLE-MESH network?

There are two phases for a device to join ESP-BLE-MESH network via a Provisioner, namely, provisioning and configuration.

- The phase of provisioning is to assign unicast address, add NetKey and etc. to a device. By provisioning, the device joins the ESP-BLE-MESH network and its role is changed from an unprovisioned device to a node.

- The phase of configuration is to add AppKeys to the node and bind AppKeys to corresponding models. And some items are optional during configuration, including adding subscription addresses to the node, set publication information, etc. By configuration, the node can actually transmit messages to a Provisioner and receive messages from it.

1.2 If a Provisioner wants to change states of a node, what requirements should be met for a Provisioner?

- Client model that corresponds to server model of the node is required.
- NetKey and AppKey used to encrypt messages shall be owned by both the node and the Provisioner.
- The address owned by the node shall be known, which could be its unicast address or subscription address.

1.3 How can NetKey and AppKey be used?

- NetKey is used for encryption of messages in Network Layer. Nodes with the same NetKey are assumed to be in the same subnet while those with different NetKeys cannot communicate with each other.
- AppKey is used for encryption of messages in Upper Transport Layer. If client model and server model are bound to different AppKeys, the communication cannot be achieved.

1.4 How to generate a NetKey or AppKey for Provisioner? Can we use a fixed NetKey or AppKey?

- The API *esp_ble_mesh_provisioner_add_local_net_key()* can be used to add a NetKey with a fixed or random value.
- The API *esp_ble_mesh_provisioner_add_local_app_key()* can be used to add an AppKey with a fixed or random value.

1.5 Is the unicast address of Provisioner fixed?

The value of `prov_unicast_addr` in *esp_ble_mesh_prov_t* is used to set the unicast address of Provisioner, it can be set only once during initialization and can't be changed afterwards.

1.6 Can the address of Provisioner serve as destination address of the node-reporting-status message ?

The unicast address of Provisioner can be set only once during initialization and can't be changed afterwards. In theory, it can serve as the destination address of the node-reporting-status message, provided that the unicast address of the Provisioner is known by nodes. Nodes can know the unicast address of Provisioner during configuration since Provisioner sends messages to them with its unicast address used as the source address. Subscription address can also be used. Provisioner subscribes to a group address or virtual address, and nodes send messages to the subscription address.

1.7 Is the unicast address of the node that is firstly provisioned by Provisioner to ESP-BLE-MESH network fixed ?

The value of `prov_start_address` in *esp_ble_mesh_prov_t* is used to set the starting address when the Provisioner provisions unprovisioned devices, i.e. the unicast address of the node it firstly provisioned. It can be set only once during initialization and can't be changed afterwards.

1.8 Is the unicast address of the node that mobile App firstly provisioned fixed?

The App will decide the unicast address, and currently most of them are fixed.

1.9 How to know which unprovisioned device is the Provisioner that is provisioning currently?

The value of `prov_attention` in *esp_ble_mesh_prov_t* is used by Provisioner set to unprovisioned device during provisioning. It can be set only once during initialization and can't be changed afterwards. When the unprovisioned device is joining the mesh network, it can display in a specific way like flashing light to notify Provisioner that it is being provisioned.

1.10 How many ways to authenticate the devices during provisioning? Which way was used in the provided examples ?

There are four authentication methods, i.e. No OOB, Static OOB, Output OOB and Input OOB. In the provided examples, No OOB is used.

1.11 What information can be carried by the advertising packets of the unprovisioned device before provisioning into the network?

- Device UUID
- OOB Info
- URL Hash (optional)

1.12 Can such information be used for device identification?

For example, each unprovisioned device contains a unique Device UUID, which can be used for device identification.

1.13 How is the unicast address assigned when the node provisioned by Provisioner contains multiple elements?

- Provisioner will assign an unicast address for the primary element of the node, and unicast address of the remaining elements are incremented one by one.
- For example: If an unprovisioned device has three elements, i.e. the primary element, the second element and the third element. After provisioning, the primary element address of the node is 0x0002 while the second element address is 0x0003, and the third element address is 0x0004.

1.14 How can Provisioner get and parse the Composition Data of nodes through Configuration Client Model?

- Provisioner can get the Composition Data of nodes using the *Configuration Client Model* API *esp_ble_mesh_config_client_set_state()* with `comp_data_get` in the parameter *esp_ble_mesh_cfg_client_get_state_t* set properly.
- Users can refer to the following code to parse the Composition Data:

```
#include <stdio.h>
#include <string.h>
#include <stdint.h>

//test date: 0C001A0001000800030000010501000000800100001003103F002A00
//0C00 1A00 0100 0800 0300 0001 05 01 0000 0080 0100 0010 0310 3F002A00

// CID is 0x000C
// PID is 0x001A
// VID is 0x0001
// CRPL is 0x0008
// Features is 0x0003 - Relay and Friend features.
// Loc is "front" - 0x0100
// NumS is 5
// NumV is 1
// The Bluetooth SIG Models supported are: 0x0000, 0x8000, 0x0001, 0x1000,
↪ 0x1003
// The Vendor Models supported are: Company Identifier 0x003F and Model␣
↪Identifier 0x002A

typedef struct {
    int16_t cid;
    int16_t pid;
    int16_t vid;
    int16_t crpl;
```

(continues on next page)

(continued from previous page)

```
    int16_t features;
    int16_t all_models;
    uint8_t sig_models;
    uint8_t vnd_models;
} esp_ble_mesh_composition_head;

typedef struct {
    uint16_t model_id;
    uint16_t vendor_id;
} tsModel;

typedef struct {
    // reserve space for up to 20 SIG models
    uint16_t SIG_models[20];
    uint8_t numSIGModels;

    // reserve space for up to 4 vendor models
    tsModel Vendor_models[4];
    uint8_t numVendorModels;
} esp_ble_mesh_composition_decode;

int decode_comp_data(esp_ble_mesh_composition_head *head, esp_ble_mesh_
↪composition_decode *data, uint8_t *mystr, int size)
{
    int pos_sig_base;
    int pos_vnd_base;
    int i;

    memcpy(head, mystr, sizeof(*head));

    if(size < sizeof(*head) + head->sig_models * 2 + head->vnd_models *␣
↪4) {
        return -1;
    }

    pos_sig_base = sizeof(*head) - 1;

    for(i = 1; i < head->sig_models * 2; i = i + 2) {
        data->SIG_models[i/2] = mystr[i + pos_sig_base] | (mystr[i + pos_
↪sig_base + 1] << 8);
        printf("%d: %4.4x\n", i/2, data->SIG_models[i/2]);
    }

    pos_vnd_base = head->sig_models * 2 + pos_sig_base;

    for(i = 1; i < head->vnd_models * 2; i = i + 2) {
        data->Vendor_models[i/2].model_id = mystr[i + pos_vnd_base] |␣
↪(mystr[i + pos_vnd_base + 1] << 8);
        printf("%d: %4.4x\n", i/2, data->Vendor_models[i/2].model_id);

        data->Vendor_models[i/2].vendor_id = mystr[i + pos_vnd_base + 2]␣
↪| (mystr[i + pos_vnd_base + 3] << 8);
        printf("%d: %4.4x\n", i/2, data->Vendor_models[i/2].vendor_id);
    }

    return 0;
}

void app_main(void)
{
    esp_ble_mesh_composition_head head = {0};
```

(continues on next page)

(continued from previous page)

```
    esp_ble_mesh_composition_decode data = {0};
    uint8_t mystr[] = { 0x0C, 0x00, 0x1A, 0x00,
                        0x01, 0x00, 0x08, 0x00,
                        0x03, 0x00, 0x00, 0x01,
                        0x05, 0x01, 0x00, 0x00,
                        0x00, 0x80, 0x01, 0x00,
                        0x00, 0x10, 0x03, 0x10,
                        0x3F, 0x00, 0x2A, 0x00};
    int ret;

    ret = decode_comp_data(&head, &data, mystr, sizeof(mystr));
    if (ret == -1) {
        printf("decode_comp_data error");
    }
}
```

1.15 How can Provisioner further configure nodes through obtained Composition Data?

Provisioner do the following configuration by calling the *Configuration Client Model* API *esp_ble_mesh_config_client_set_state()*.

- Add AppKey to nodes with `app_key_add` in the parameter *esp_ble_mesh_cfg_client_set_state_t* set properly.
- Add subscription address to the models of nodes with `model_sub_add` in the parameter *esp_ble_mesh_cfg_client_set_state_t* set properly.
- Set publication information to the models of nodes with `model_pub_set` in the parameter *esp_ble_mesh_cfg_client_set_state_t* set properly.

1.16 Can nodes add corresponding configurations for themselves?

This method can be used in special cases like testing period.

- Here is an example to show nodes add new group addresses for their models.

```
esp_err_t example_add_fast_prov_group_address(uint16_t model_id, uint16_t␣
↪group_addr)
{
    const esp_ble_mesh_comp_t *comp = NULL;
    esp_ble_mesh_elem_t *element = NULL;
    esp_ble_mesh_model_t *model = NULL;
    int i, j;

    if (!ESP_BLE_MESH_ADDR_IS_GROUP(group_addr)) {
        return ESP_ERR_INVALID_ARG;
    }

    comp = esp_ble_mesh_get_composition_data();
    if (!comp) {
        return ESP_FAIL;
    }

    for (i = 0; i < comp->element_count; i++) {
        element = &comp->elements[i];
        model = esp_ble_mesh_find_sig_model(element, model_id);
        if (!model) {
            continue;
        }
        for (j = 0; j < ARRAY_SIZE(model->groups); j++) {
            if (model->groups[j] == group_addr) {
                break;
```

(continues on next page)

(continued from previous page)

```
            }
        }
        if (j != ARRAY_SIZE(model->groups)) {
            ESP_LOGW(TAG, "%s: Group address already exists, element␣
↪index: %d", __func__, i);
            continue;
        }
        for (j = 0; j < ARRAY_SIZE(model->groups); j++) {
            if (model->groups[j] == ESP_BLE_MESH_ADDR_UNASSIGNED) {
                model->groups[j] = group_addr;
                break;
            }
        }
        if (j == ARRAY_SIZE(model->groups)) {
            ESP_LOGE(TAG, "%s: Model is full of group addresses, element␣
↪index: %d", __func__, i);
        }
    }

    return ESP_OK;
}
```

Note: When the NVS storage of the node is enabled, group address added and AppKey bound by this method will not be saved in the NVS when the device is powered off currently. These configuration information can only be saved if they are configured by Configuration Client Model.

1.17 How does Provisioner control nodes by grouping?

Generally there are two approaches to implement group control in ESP-BLE-MESH network, group address approach and virtual address approach. And supposing there are 10 devices, i.e., five devices with blue lights and five devices with red lights.

- Method 1: 5 blue lights can subscribe to a group address, 5 red lights subscribe to another one. By sending messages to different group addresses, Provisioner can realize group control.
- Method 2: 5 blue lights can subscribe to a virtual address, 5 red lights subscribe to another one. By sending messages to different virtual addresses, Provisioner can realize group control.

1.18 How does Provisioner add nodes to multiple subnets?

Provisioner can add multiple NetKeys to nodes during configuration, and nodes sharing the same NetKey belong to the same subnet. Provisioner can communicate with nodes on different subnets by using different NetKeys.

1.19 How does Provisioner know if a node in the mesh network is offline?

Node offline is usually defined as: the condition that the node cannot be properly communicated with other nodes in the mesh network due to power failure or some other reasons.

There is no connection between nodes and nodes in the ESP-BLE-MESH network. They communicate with each other through advertising channels.

An example is given here to show how to detect a node is offline by Provisioner.

- The node can periodically send heartbeat messages to Provisioner. And if Provisioner failed to receive heartbeat messages in a certain period, the node is considered to be offline.

Note: The heartbeat message should be designed into a single package (less than 11 bytes), so the transmission and reception of it can be more efficient.

1.20 What operations should be performed when Provisioner removes nodes from the network?

Usually when Provisioner tries to remove node from the mesh network, the procedure includes three main steps:

- Firstly, Provisioner adds the node that need to be removed to the "blacklist".
- Secondly, Provisioner performs the *Key Refresh procedure*.
- Lastly, the node performs node reset procedure, and switches itself to an unprovisioned device.

1.21 In the Key Refresh procedure, how does Provisioner update the Netkey owned by nodes?

- Provisioner updates the NetKey of nodes using the *Configuration Client Model* API `esp_ble_mesh_config_client_set_state()` with `net_key_update` in the parameter `esp_ble_mesh_cfg_client_set_state_t` set properly.
- Provisioner updates the AppKey of nodes using the *Configuration Client Model* API `esp_ble_mesh_config_client_set_state()` with `app_key_update` in the parameter `esp_ble_mesh_cfg_client_set_state_t` set properly.

1.22 How does Provisioner manage nodes in the mesh network?

ESP-BLE-MESH implements several functions related to basic node management in the example, such as `esp_ble_mesh_store_node_info()`. And ESP-BLE-MESH also provides the API `esp_ble_mesh_provisioner_set_node_name()` which can be used to set the node's local name and the API `esp_ble_mesh_provisioner_get_node_name()` which can be used to get the node's local name.

1.23 What does Provisioner need when trying to control the server model of nodes?

Provisioner must include corresponding client model before controlling the server model of nodes.

Provisioner shall add its local NetKey and AppKey.

- Provisioner add NetKey by calling the API `esp_ble_mesh_provisioner_add_local_net_key()`.
- Provisioner add AppKey by calling the API `esp_ble_mesh_provisioner_add_local_app_key()`.

Provisioner shall configure its own client model.

- Provisioner bind AppKey to its own client model by calling the API `esp_ble_mesh_provisioner_bind_app_key_to_local_model()`.

1.24 How does Provisoner control the server model of nodes?

ESP-BLE-MESH supports all SIG-defined client models. Provisioner can use these client models to control the server models of nodes. And the client models are divided into 6 categories with each category has the corresponding functions.

- Configuration Client Model
  - The API `esp_ble_mesh_config_client_get_state()` can be used to get the `esp_ble_mesh_cfg_client_get_state_t` values of Configuration Server Model.
  - The API `esp_ble_mesh_config_client_set_state()` can be used to set the `esp_ble_mesh_cfg_client_set_state_t` values of Configuration Server Model.
- Health Client Model
  - The API `esp_ble_mesh_health_client_get_state()` can be used to get the `esp_ble_mesh_health_client_get_state_t` values of Health Server Model.

  - The API `esp_ble_mesh_health_client_set_state()` can be used to set the `esp_ble_mesh_health_client_set_state_t` values of Health Server Model.
- Generic Client Models
  - The API `esp_ble_mesh_generic_client_get_state()` can be used to get the `esp_ble_mesh_generic_client_get_state_t` values of Generic Server Models.
  - The API `esp_ble_mesh_generic_client_set_state()` can be used to set the `esp_ble_mesh_generic_client_set_state_t` values of Generic Server Models.
- Lighting Client Models
  - The API `esp_ble_mesh_light_client_get_state()` can be used to get the `esp_ble_mesh_light_client_get_state_t` values of Lighting Server Models.
  - The API `esp_ble_mesh_light_client_set_state()` can be used to set the `esp_ble_mesh_light_client_set_state_t` values of Lighting Server Models.
- Sensor Client Models
  - The API `esp_ble_mesh_sensor_client_get_state()` can be used to get the `esp_ble_mesh_sensor_client_get_state_t` values of Sensor Server Model.
  - The API `esp_ble_mesh_sensor_client_set_state()` can be used to set the `esp_ble_mesh_sensor_client_set_state_t` values of Sensor Server Model.
- **Time and Scenes Client Models**
  - The API `esp_ble_mesh_time_scene_client_get_state()` can be used to get the `esp_ble_mesh_time_scene_client_get_state_t` values of Time and Scenes Server Models.
  - The API `esp_ble_mesh_time_scene_client_set_state()` can be used to set the `esp_ble_mesh_time_scene_client_set_state_t` values of Time and Scenes Server Models.

2. Node Development

2.1 What kind of models are included by nodes?

- In ESP-BLE-MESH, nodes are all composed of a series of models with each model implements some functions of the node.
- Model has two types, client model and server model. Client model can get and set the states of server model.
- Model can also be divided into SIG model and vendor model. All behaviors of SIG models are officially defined while behaviors of vendor models are defined by users.

2.2 Is the format of messages corresponding to each model fixed?

- Messages, which consist of opcode and payload, are divided by opcode.
- The type and the format of the messages corresponding to models are both fixed, which means the messages transmitted between models are fixed.

2.3 Which functions can be used to send messages with the models of nodes?

- For client models, users can use the API `esp_ble_mesh_client_model_send_msg()` to send messages.
- For server models, users can use the API `esp_ble_mesh_server_model_send_msg()` to send messages.
- For publication, users call the API `esp_ble_mesh_model_publish()` to publish messages.

2.4 How to achieve the transmission of messages without packet loss?

Acknowledegd message is needed if users want to transmit messages without packet loss. The default time to wait for corresponding response is set in *CONFIG_BLE_MESH_CLIENT_MSG_TIMEOUT*. If the sender waits for the response until the timer expires, the corresponding timeout event would be triggered.

Note: Response timeout can be set in the API *esp_ble_mesh_client_model_send_msg()*. The default value (4 seconds) would be applied if the parameter `msg_timeout` is set to **0**.

2.5 How to send unacknowledged messages?

For client models, users can use the API *esp_ble_mesh_client_model_send_msg()* with the parameter `need_rsp` set to `false` to send unacknowledged messages.

For server models, the messages sent by using the API *esp_ble_mesh_server_model_send_msg()* are always unacknowledged messages.

2.6 How to add subscription address to models?

Subscription address can be added through Configuration Client Model.

2.7 What is the difference between messages sent and published by models?

Messages sent by calling the API *esp_ble_mesh_client_model_send_msg()* or *esp_ble_mesh_server_model_send_msg()* will be sent in the duration determined by the Network Transmit state.

Messages published by calling the API *esp_ble_mesh_model_publish()* will be published determined by the Model Publication state. And the publication of messages is generally periodic or with a fixed number of counts. The publication period and publication count are controlled by the Model Publication state, and can be configured through Configuration Client Model.

2.8 How many bytes can be carried when sending unsegmented messages?

The total payload length (which can be set by users) of unsegmented message is 11 octets, so if the opcode of the message is 2 octets, then the message can carry 9-octets of valid information. For vendor messages, due to the 3-octets opcode, the remaining payload length is 8 octets.

2.9 When should the Relay feature of nodes be enabled?

Users can enable the Relay feature of all nodes when nodes detected in the mesh network are sparse.

For dense mesh network, users can choose to just enable the Relay feature of several nodes.

And users can enable the Relay feature by default if the mesh network size is unknown.

2.10 When should the Proxy feature of node be enabled?

If the unprovisioned device is expected to be provisioned by a phone, then it should enable the Proxy feature since almost all the phones do not support sending ESP-BLE-MESH packets through advertising bearer currently. And after the unprovisioned device is provisioned successfully and becoming a Proxy node, it will communicate with the phone using GATT bearer and using advertising bearer to communicate with other nodes in the mesh network.

2.11 How to use the Proxy filter?

The Proxy filter is used to reduce the number of Network PDUs exchanged between a Proxy Client (e.g. the phone) and a Proxy Server (e.g. the node). And with the Proxy filter, Proxy Client can explicitly request to receive only mesh messages with certain destination addresses from Proxy Server.

2.12 When a message can be relayed by a Relay node?

If a message need to be relayed, the following conditions should be met.

- The message is in the mesh network.
- The message is not sent to the unicast address of the node.
- The value of TTL in the message is greater than 1.

2.13 If a message is segmented into several segments, should the other Relay nodes just relay when one of these segments is received or wait until the message is received completely?

Relay nodes will forward segments when one of them are received rather than keeping waiting until all the segments are received.

2.14 What is the principle of reducing power consumption using Low Power feature?

- When the radio is turned on for listening, the device is consuming energy. When low power feature of the node is enabled, it will turn off its radio in the most of the time.
- And cooperation is needed between low power node and friend node, thus low power node can receive messages at an appropriate or lower frequency without the need to keep listening.
- When there are some new messages for low power node, its friend node will store the messages for it. And low power node can poll friend nodes to see if there are new messages at a fixed interval.

2.15 How to continue the communication on the network after powering-down and powering-up again?

Enable the configuration `Store ESP-BLE-MESH Node configuration persistently` in *menuconfig*.

2.16 How to send out the self-test results of nodes?

It is recommended that nodes can publish its self-test results periodically through Health Server Model.

2.17 How to transmit information between nodes?

One possible application scenario for transmitting information between nodes is that spray nodes would be triggered once smoke alarm detected high smoke concentration. There are two approaches in implementation.

- Approach 1 is that spray node subscribes to a group address. When smoke alarm detects high smoke concentration, it will publish a message whose destination address is the group address which has been subscribed by spray node.
- Approach 2 is that Provisioner can configure the unicast address of spray node to the smoke alarm. When high smoke concentration is detected, smoke alarm can use send messages to the spray node with the spray node ' s unicast address as the destination address.

2.18 Is gateway a must for nodes communication?

- Situation 1: nodes only communicate within the mesh network. In this situation, no gateway is need. ESP-BLE-MESH network is a flooded network, messages in the network have no fixed paths, and nodes can communicate with each other freely.
- Situation 2: if users want to control the nodes remotely, for example turn on some nodes before getting home, then a gateway is needed.

2.19 When will the IV Update procedure be performed?

IV Update procedure would be performed once sequence number of messages sent detected by the bottom layer of node reached a critical value.

2.20 How to perform IV Update procedure?

Nodes can perform IV Update procedure with Secure Network Beacon.

3. ESP-BLE-MESH and Wi-Fi Coexistence

3.1 Which modes does Wi-Fi support when it coexists with ESP-BLE-MESH?

Currently only Wi-Fi station mode supports the coexistence.

3.2 Why is the Wi-Fi throughput so low when Wi-Fi and ESP-BLE-MESH coexist?

The *ESP32-DevKitC* board without PSRAM can run properly but the throughput of it is low since it has no PSRAM. When Bluetooth and Wi-Fi coexist, the throughput of ESP32-DevKitC with PSRAM can be stabilized to more than 1Mbps.

Some configurations in menuconfig shall be enabled to support PSRAM.

- `ESP32-specific --> Support for external,SPI-connected RAM --> Try to allocate memories of Wi-Fi and LWIP...`
- `Bluetooth --> Bluedroid Enable --> BT/BLE will first malloc the memory from the PSRAM`
- `Bluetooth --> Bluedroid Enable --> Use dynamic memory allocation in BT/BLE stack.`
- `Bluetooth --> Bluetooth controller --> BLE full scan feature supported.`
- `Wi-Fi --> Software controls Wi-Fi/Bluetooth coexistence --> Wi-Fi`

4. Fast Provisioning

4.1 Why is fast provisioning needed?

Normally when they are several unprovisioned devices, users can provision them one by one. But when it comes to a large number of unprovisioned devices (e.g. 100), provisioning them one by one will take huge amount of time. With fast provisioning, users can provision 100 unprovisioned devices in about 50 seconds.

4.2 Why EspBleMesh App would wait for a long time during fast provisioning?

After the App provisioned one Proxy node, it will disconnect from the App during fast provisioning, and reconnect with the App when all the nodes are provisioned.

4.3 Why is the number of node addresses displayed in the App is more than that of existing node addresses?

Each time after a fast provisioning process, and before starting a new one, the node addresses in the App should be cleared, otherwise the number of the node address will be incorrect.

4.4 What is the usage of the count value which was input in EspBleMesh App?

The **count** value is provided to the Proxy node which is provisioned by the App so as to determine when to start Proxy advertising in advance.

4.5 When will Configuration Client Model of the node running fast_prov_server example start to work?

Configuration Client Model will start to work after the Temporary Provisioner functionality is enabled.

4.6 Will the Temporary Provisioner functionality be enabled all the time?

After the nodes receive messages used to turn on/off lights, all the nodes will disable its Temporary Provisioner functionality and become nodes.

5. Log Help You can find meaning of errors or warnings when they appear at the bottom of ESP-BLE-MESH stack.

5.1 What is the meaning of warning `ran out of retransmit attempts`?

When the node transmits a segmented message, and due to some reasons, the receiver doesn't receive the complete message. Then the node will retransmit the message. When the retransmission count reaches the maximum number, which is 4 currently, then this warning will appear.

5.2 What is the meaning of warning `Duplicate found in Network Message Cache`?

When the node receives a message, it will compare the message with the ones stored in the network cache. If the same has been found in the cache, which means it has been received before, then the message will be dropped.

5.3 What is the meaning of warning `Incomplete timer expired`?

When the node doesn't receive all the segments of a segmented message during a certain period (e.g. 10 seconds), then the Incomplete timer will expire and this warning will appear.

5.4 What is the meaning of warning `No matching TX context for ack`?

When the node receives a segment ack and it doesn't find any self-send segmented message related with this ack, then this warning will appear.

5.5 What is the meaning of warning `No free slots for new incoming segmented messages`?

When the node has no space for receiving new segmented message, this warning will appear. Users can make the space larger through the configuration *CONFIG_BLE_MESH_RX_SEG_MSG_COUNT*.

5.6 What is the meaning of error `Model not bound to Appkey 0x0000` ?

When the node sends messages with a model and the model has not been bound to the AppKey with AppKey Index 0x000, then this error will appear.

5.7 What is the meaning of error `Busy sending message to DST xxxx`?

This error means client model of the node has transmitted a message to the target node and now is waiting for a response, users can not send messages to the same node with the same unicast address. After the corresponding response is received or timer is expired, then another message can be sent.

6. Example Help

6.1 How are the ESP-BLE-MESH callback functions classified?

- The API *esp_ble_mesh_register_prov_callback()* is used to register callback function used to handle provisioning and networking related events.
- The API *esp_ble_mesh_register_config_client_callback()* is used to register callback function used to handle Configuration Client Model related events.
- The API *esp_ble_mesh_register_config_server_callback()* is used to register callback function used to handle Configuration Server Model related events.

- The API *esp_ble_mesh_register_health_client_callback()* is used to register callback function used to handle Health Client Model related events.
- The API *esp_ble_mesh_register_health_server_callback()* is used to register callback function used to handle Health Server Model related events.
- The API *esp_ble_mesh_register_generic_client_callback()* is used to register callback function used to handle Generic Client Models related events.
- The API *esp_ble_mesh_register_light_client_callback()* is used to register callback function used to handle Lighting Client Models related events.
- The API *esp_ble_mesh_register_sensor_client_callback()* is used to register callback function used to handle Sensor Client Model related events.
- The API *esp_ble_mesh_register_time_scene_client_callback()* is used to register callback function used to handle Time and Scenes Client Models related events.
- The API *esp_ble_mesh_register_custom_model_callback()* is used to register callback function used to handle vendor model and unrealized server models related events.

7. Others

7.1 How to print the message context?

The examples use `ESP_LOG_BUFFER_HEX()` to print the message context while the ESP-BLE-MESH protocol stack uses `bt_hex()`.

7.2 Which API can be used to restart ESP32?

The API *esp_restart()*.

7.3 How to monitor the remaining space of the stack of a task?

The API *vTaskList()* can be used to print the remaining space of the task stack periodically.

7.4 How to change the level of log without changing the menuconfig output level?

The API *esp_log_level_set()* can be used to change the log output level rather than using menuconfig to change it.

ESP-BLE-MESH Terminology

Table 11: Table 1 ESP-BLE-MESH Terminology - Role

Term	Official Definition	Detailed Explanation
Unprovisioned Device	A device that is not a member of a mesh network is known as an unprovisioned device.	Examples: lighting devices, temperature control devices, manufacturing equipments and electric doors, etc.
Node	A node is a provisioned device.	The role of unprovisioned device will change to node after being provisioned to ESP-BLE-MESH network. Nodes (such as lighting devices, temperature control devices, manufacturing equipments, and electric doors) are devices that can send, receive, or relay messages in ESP-BLE-MESH network, and they can optionally support one or more subnets.
Relay Node	A node that supports the Relay feature and has the Relay feature enabled is known as a Relay node.	Relay nodes can receive and resend ESP-BLE-MESH messages, so the messages can be transferred further. Users can decide whether or not to enable forwarding function of nodes according to nodes' status. Messages can be relayed for multiple times, and each relay is considered as a "hop". Messages can hop up to 126 times, which is enough for message transmission in a wide area.
Proxy Node	A node that supports the Proxy feature and has the Proxy feature enabled is known as a Proxy node.	Proxy nodes receive messages from one bearer (it generally includes advertising bearer and GATT bearer) and resend it from another one. The purpose is to connect communication equipments that only support GATT bearer to ESP-BLE-MESH network. Generally, mobile apps need a Proxy node to access Mesh network. Without Proxy nodes, mobile apps cannot communicate with members in Mesh network.
Friend Node	A node that supports the Friend feature, has the Friend feature enabled, and has a friendship with a node that supports the Low Power feature is known as a Friend node.	Friend node, like the backup of Low Power node (LPN), can store messages that are sent to Low Power node and security updates; the stored information will be transferred to Low Power node when Low Power node needs it. Low Power node must establish "friendship" with another node that supports the Friend Feature to reduce duty cycle of its receiver, thus power consumption of Low Power node can be reduced. Low Power node needs to find a Friend node to establish a friendship with it. The process involved is called "friendship establishment". Cooperation between Low Power node and Friend nodes enables Low Power node to schedule the use of the radio, thus Low Power node can receive messages at an appropriate or lower frequency without the need of keeping listening. Low Power node will poll Friend node to see if there is new message.
Low Power Node	A node that supports the Low Power feature and has a friendship with a node that supports the Friend feature is known as a Low Power node.	By polling, Low Power node gets information from Friend node, such as messages, security updates, and etc.
Provisioner	A node that is capable of adding a device to a mesh network.	The device that can provision unprovisioned devices is called a Provisioner. This process usually needs to be implemented through an app that is typically provided by the product manufacturer and can be used on a gateway, a smartphone, tablet or other carriers.

Table 12: Table 2 ESP-BLE-MESH Terminology - Composition

Term	Official Definition	Detailed Explanation
State	A value representing a condition of an element that is exposed by an element of a node.	Each node in a ESP-BLE-MESH network has an independent set of state values that indicate certain states of the device, like brightness, and color of lighting device. Change of state value will lead to change of the physical state of devices. For example, changing the on/off state of a device is actually turning on/off the device.
Model	A model defines the basic functionality of a node.	A node may contain multiple models, and each model defines basic functionalities of nodes, like the states needed by the nodes, the messages controlling the states, and actions resulted from messages handling. The function implementation of the nodes is based on models, which can be divided into SIG Model and Vendor Model, with the former defined by SIG and latter defined by users.
Element	An addressable entity within a device.	A node can contain one or more elements, with each having a unicast address and one or more models, and the models contained by the same element must not be the same.
Composition Data State	The Composition Data state contains information about a node, the elements it includes, and the supported models.	By reading the value of the Composition Data state, users can know basic information of the node, such as the number of elements, and the models in each element. Provisioner gets this message to further provision the device, such as configuring subscription address and publishing address of nodes.

Table 13: Table 3 ESP-BLE-MESH Terminology - Features

Term	Official Definition	Detailed Explanation
Low Power Feature	The ability to operate within a mesh network at significantly reduced receiver duty cycles only in conjunction with a node supporting the Friend feature.	Low Power feature reduces power consumption of nodes. When a Low Power node is searching for a Friend node, and there are multiple Friend nodes nearby, it selects the most suitable Friend node through algorithm.
Friend Feature	The ability to help a node supporting the Low Power feature to operate by storing messages destined for those nodes.	By enabling friend feature, the node can help to store information for Low Power node. The nodes enabled with friend feature may cause more power and memory consumption.
Relay Feature	The ability to receive and retransmit mesh messages over the advertising bearer to enable larger networks.	The relay feature enables ESP-BLE-MESH messages to hop among nodes for multiple times, and the transmission distance can exceed the range of direct radio transmission between two nodes, thereby covering the entire network. When a node is enabled with the relay feature to relay messages, it only relays the messages of its own subnet, and does not relay the messages of other subnets. The data integrity will not be considered when the node enabled with relay feature relays segmented messages. The node would relay every segmented message once it receives one rather than waiting for the complete message.
Proxy Feature	The ability to receive and retransmit mesh messages between GATT and advertising bearers.	The purpose of the proxy feature is to allow nodes without an advertising bearer to access the ESP-BLE-MESH network. The proxy feature is typically used in nodes that need to connect to mobile apps.

Table 14: Table 4 ESP-BLE-MESH Terminology - Provisioning

Term	Official Definition	Detailed Explanation
PB-ADV	PB-ADV is a provisioning bearer used to provision a device using Generic Provisioning PDUs over the advertising channels.	PB-ADV transfers packets generated during the provisioning process over the advertising channels. This way can only be used for provisioning when provisioner and unprovisioned device both support PB-ADV.
PB-GATT	PB-GATT is a provisioning bearer used to provision a device using Proxy PDUs to encapsulate Provisioning PDUs within the Mesh Provisioning Service.	PB-GATT uses connection channels to transfer packets generated during the provisioning process. If an unprovisioned device wants to be provisioned through this method, it needs to implement the related Mesh Provisioning Service. Unprovisioned devices which don ' t implement such service cannot be provisioned into mesh network through PB-GATT bearer.
Provisioning	Provisioning is a process of adding an unprovisioned device to a mesh network, managed by a Provisioner.	The process of provisioning turns the "unprovisioned device" into a "node" , making it a member of the ESP-BLE-MESH network.
Authentication Method	Authentication is a step during the provisioning of nodes.	There are four authentication methods for unprovisioned devices: Output OOB, Input OOB, Static OOB, and No OOB.
Input OOB	Input Out-of-Band	For example, a Provisioner generates and displays a random number, and then prompts users to take appropriate actions to input the random number into the unprovisioned device. Taking lighting switch as an example, users can press the button for several times in a certain period of time to input the random number displayed on the Provisioner. Authentication method of the Input OOB is similar to that of Output OOB, but the role of the device is reversed.
Output OOB	Output Out-of-Band	For example, an unprovisioned device will choose a random number and output the number in a way that is compatible with its functionality. If the unprovisioned device is a bulb, it can flash a specified number of times. If the unprovisioned device has an LCD screen, the random number can display as a multi-digit value. Users who start provisioning should input the observed number to authenticate the unprovisioned device.
Static OOB	Static Out-of-Band	Authentication method of Static OOB: use Static OOB information. Use 0 as Static OOB information if No OOB information is needed. Use Static OOB information to authenticate devices which are going through provisioning if OOB information is needed.
No OOB	No Out-of-Band	Authentication method of No OOB: Set the value of the Static OOB field to 0. Using this way is like not authenticating the unprovisioned devices.

Table 15: Table 5 ESP-BLE-MESH Terminology - Address

Term	Official Definition	Detailed Explanation
Unassigned Address	This is a special address type, with a value of 0x0000. Its use indicates that an Element has not yet been configured or had a Unicast Address assigned to it.	The addresses owned by elements which has not been configured yet or no address has been allocated are unassigned addresses. These elements will not be used for messages transfer because they have no fixed address. Unassigned address is recommended to set as the value of the address before setting the address of user code.
Unicast Address	A unicast address is a unique address allocated to each element.	During provisioning, the Provisioner will assign a unicast address to each element of node within the life cycle of the nodes in the network. A unicast address may appear in the source/destination address field of a message. Messages sent to a unicast address can only be processed by the element that owns the unicast address.
Virtual Address	A virtual address represents a set of destination addresses. Each virtual address logically represents a Label UUID, which is a 128-bit value that does not have to be managed centrally.	Associated with specific UUID labels, a virtual address may serve as the publishing or subscription address of the model. A UUID label is a 128-bit value associated with elements of one or more nodes. For virtual addresses, the 15th and 14th bits are set to 1 and 0 respectively; bits from 13th to 0 are set to hash values (providing 16384 hash values). The hash is a derivation of the Label UUID. To use subscribing elements to check the full 128-bit UUID is very inefficient while hash values provide a more efficient way to determine which elements that which messages are finally sent to.
Group Address	A group address is an address that is programmed into zero or more elements	Group address is another kind of multicast address in the ESP-BLE-MESH network, which is usually used to group nodes. A message sent to the all-proxies address shall be processed by the primary element of all nodes that have the proxy functionality enabled. A message sent to the all-friends address shall be processed by the primary element of all nodes that have the friend functionality enabled. A message sent to the all-relays address shall be processed by the primary element of all nodes that have the relay functionality enabled. A message sent to the all-nodes address shall be processed by the primary element of all nodes.

Table 16: Table 6 ESP-BLE-MESH Terminology - Security

Term	Official Definition	Detailed Explanation
Device Key (DevKey)	There is also a device key, which is a special application key that is unique to each node, is known only to the node and a Configuration Client, and is used to secure communications between the node and a Configuration Client.	The device key enables you to provision the devices, configure the nodes. The device key is used to encrypt Configuration Messages, i.e. the message transferred between the Provisioner and the node when the device is configured.
Application Key (AppKey)	Application keys are used to secure communications at the upper transport layer.	Application key is used for decryption of application data before delivering application data to application layer and encryption of them during the delivery of application layer. Some nodes in the network have a specific purpose and can restrict access to potentially sensitive data based on the needs of the application. With specific application keys, these nodes are associated with specific applications. Generally speaking, the fields using different application keys include security (access control of buildings, machine rooms and CEO offices), lighting (plant, exterior building and sidewalks) and HVAC systems. Application keys are bound to Network keys. This means application keys are only used in a context of a Network key they are bound to. An application key shall only be bound to a single Network key.
Master Security Material	The master security material is derived from the network key (NetKey) and can be used by other nodes in the same network. Messages encrypted with master security material can be decoded by any node in the same network.	The corresponding friendship messages encrypted with the friendship security material: 1. Friend Poll, 2. Friend Update, 3. Friend Subscription List, add/delete/confirm, 4. The Stored Messages" sent by friend nodes to Low Power node. The corresponding friendship messages encrypted with the master security material: 1. Friend Clear, 2. Friend Clear Confirm. Based on the setup of the applications, the messages sent from the Low Power node to the friend nodes will be encrypted with the friendship security material or master security material, with the former being used by the messages transmitted between Low Power node and friend nodes and the latter being used by other network messages.

Table 17: Table 7 ESP-BLE-MESH Terminology - Message

Term	Official Definition	Detailed Explanation
Reassembly / Segmentation	Segmentation and reassembly (SAR) is a method of communication network, which is divided into small units before transmitting packets and reassembled in a proper order at the communication receiving end.	The lower transport layer will automatically segment the message whose size is too big. The receiving end will return a response message, and the transmitting end will send the data packet again that the receiving end does not receive according to the response message. This is automatically completed by the lower transport layer. Unsegmented messages have at most 15 bytes, of which 4 bytes are transMIC, so the remaining is 11 bytes; in the case of segmentation, there are 12 valid bytes in the first several packets, and 8 in the last one. Special case: A shorter packet requires mandatory segmentation from lower transport layer, in which case the valid byte is 8 bytes.
Unacknowledged / Acknowledged	There are two types of messages: Unacknowledged or Acknowledged	Based on the whether or not the receiving end needs to send the response message, the messages sent are divided into two kinds. The sending end should set the maximum number of retransmission.

Table 18: Table 8 ESP-BLE-MESH Terminology - Foundation Models

Term	Official Definition	Detailed Explanation
Configuration Server Model	This model is used to represent a mesh network configuration of a device.	The node must contain the Configuration Server Model, which is responsible for maintaining configuration-related states. The states that Configuration Server Model maintains include: NetKey List, AppKey List, Model to AppKey List, Node Identity, Key Refresh Phase, Heartbeat Publish, Heartbeat Subscription, Network Transmit, Relay Retransmit etc.
Configuration Client Model	The model is used to represent an element that can control and monitor the configuration of a node.	The Configuration Client Model uses messages to control the state maintained by the Configuration Server Model. The Provisioner must contain the Configuration Client Model, with which the configuration messages, like Configuration Composition Data Get can be sent.
Health Server Model	This model is used to represent a mesh network diagnostics of a device.	The Health Server Model is primarily used by devices to check their states and see if there is an error. The states maintained by Health Server model include: Current Fault, Registered Fault, Health Period, and Attention Timer.
Health Client Model	The model is used to represent an element that can control and monitor the health of a node.	The Health Client Model uses messages to control the state maintained by the Health Server Model. The model can get the self-test information of other nodes through the message "Health Fault Get" .

Table 19: Table 9 ESP-BLE-MESH Terminology - Network Management

Term	Official Definition	Detailed Explanation
Key Refresh procedure	This procedure is used when the security of one or more network keys and/or one or more of the application keys has been compromised or could be compromised.	Key Refresh Procedure is used to update network key and application key of ESP-BLE-MESH network. Key Refresh Procedure is used when the security of one or more network keys and/or one or more application keys is threatened or potentially threatened. Keys are usually updated after some nodes in the network are removed.
IV (Initialisation Vector) Update Procedure	A node can also use an IV Update procedure to signal to peer nodes that it is updating the IV Index.	The IV Update procedure is used to update the value of ESP-BLE-MESH network' s IV Index. This value is related to the random number required for message encryption. To ensure that the value of the random number is not repeated, this value is periodically incremented. IV Index is a 32-bit value and a shared network resource. For example, all nodes in a mesh network share the same IV Index value. Starting from 0x00000000, the IV Index increments during the IV Update procedure and maintained by a specific process, ensuring the IV Index shared in the mesh network is the same. This can be done when the node believes that it has the risk of exhausting its sequence number, or when it determines that another node is nearly exhausting its sequence number. Note: The update time must not be less than 96 hours. It can be triggered when a secure network beacon is received, or when the node determines that its sequence number is greater than a certain value.

For more terms, please see: ESP-BLE-MESH Glossary of Terms.

Bluetooth SIG Documentation

- BLE Mesh Core Specification
- BLE Mesh Model Specification
- An Intro to Bluetooth Mesh Part 1 / Part 2

- The Fundamental Concepts of Bluetooth Mesh Networking, Part 1 / Part 2
- Bluetooth Mesh Networking: Friendship
- Management of Devices in a Bluetooth Mesh Network
- Bluetooth Mesh Security Overview
- Provisioning a Bluetooth Mesh Network Part 1 / Part 2

4.10 ESP-WIFI-MESH

This guide provides information regarding the ESP-WIFI-MESH protocol. Please see the *ESP-WIFI-MESH API Reference* for more information about API usage.

4.10.1 Overview

ESP-WIFI-MESH is a networking protocol built atop the Wi-Fi protocol. ESP-WIFI-MESH allows numerous devices (henceforth referred to as nodes) spread over a large physical area (both indoors and outdoors) to be interconnected under a single WLAN (Wireless Local-Area Network). ESP-WIFI-MESH is self-organizing and self-healing meaning the network can be built and maintained autonomously.

The ESP-WIFI-MESH guide is split into the following sections:

1. *Introduction*
2. *ESP-WIFI-MESH Concepts*
3. *Building a Network*
4. *Managing a Network*
5. *Data Transmission*
6. *Channel Switching*
7. *Performance*
8. *Further Notes*

4.10.2 Introduction

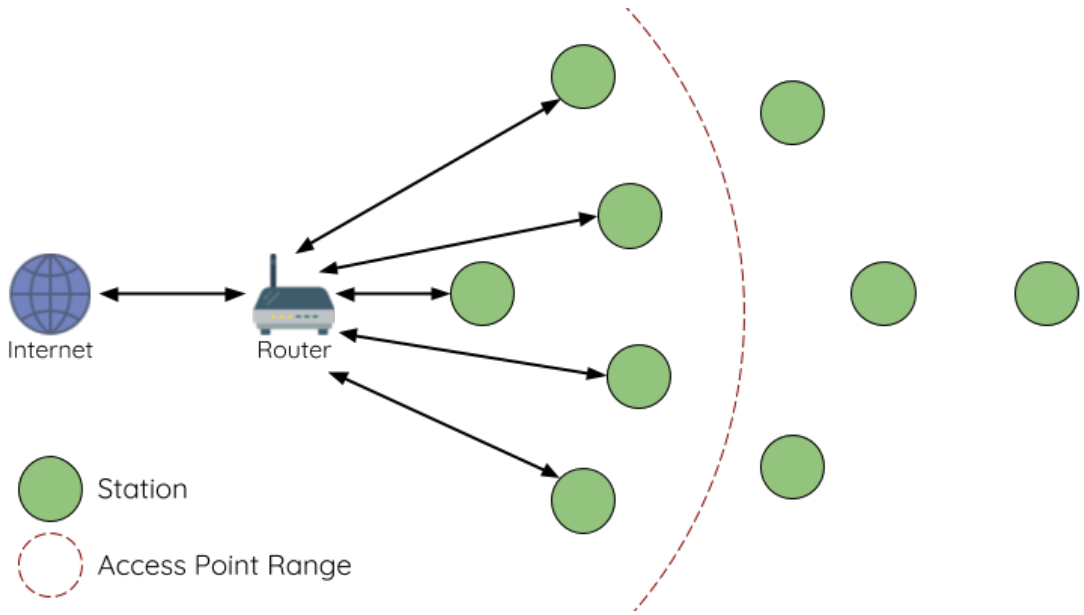

Fig. 16: Traditional Wi-Fi Network Architecture

A traditional infrastructure Wi-Fi network is a point-to-multipoint network where a single central node known as the access point (AP) is directly connected to all other nodes known as stations. The AP is responsible for arbitrating and forwarding transmissions between the stations. Some APs also relay transmissions to/from an external IP network via a router. Traditional infrastructure Wi-Fi networks suffer the disadvantage of limited coverage area due to the requirement that every station must be in range to directly connect with the AP. Furthermore, traditional Wi-Fi networks are susceptible to overloading as the maximum number of stations permitted in the network is limited by the capacity of the AP.

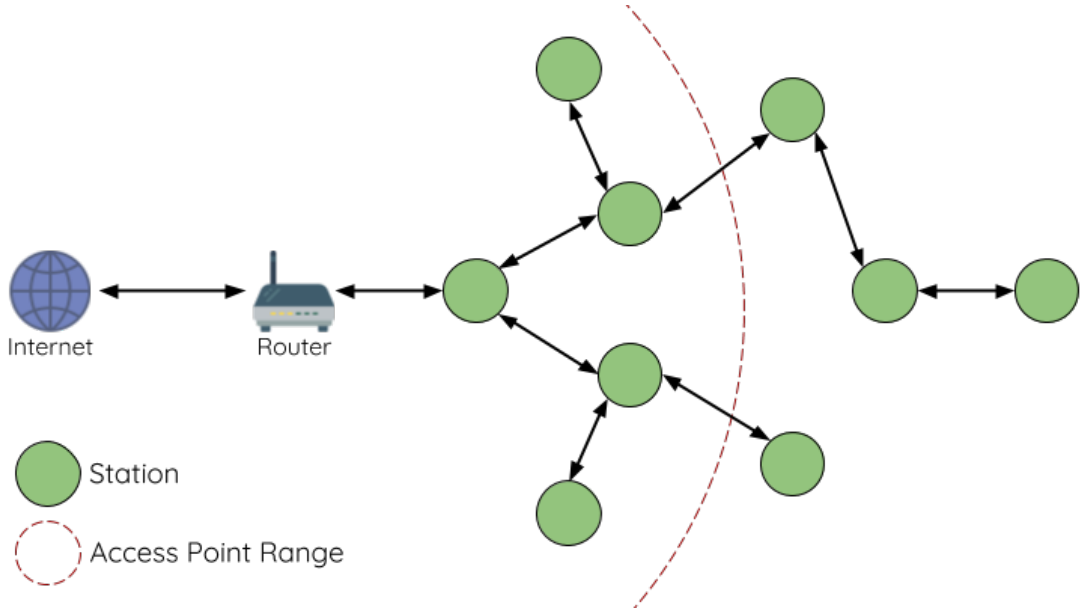

Fig. 17: ESP-WIFI-MESH Network Architecture

ESP-WIFI-MESH differs from traditional infrastructure Wi-Fi networks in that nodes are not required to connect to a central node. Instead, nodes are permitted to connect with neighboring nodes. Nodes are mutually responsible for relaying each others transmissions. This allows an ESP-WIFI-MESH network to have much greater coverage area as nodes can still achieve interconnectivity without needing to be in range of the central node. Likewise, ESP-WIFI-MESH is also less susceptible to overloading as the number of nodes permitted on the network is no longer limited by a single central node.

4.10.3 ESP-WIFI-MESH Concepts

Terminology

Term	Description
Node	Any device that **is** or **can be** part of an ESP-WIFI-MESH network
Root Node	The top node in the network
Child Node	A node X is a child node when it is connected to another node Y where the connection makes node X more distant from the root node than node Y (in terms of number of connections).
Parent Node	The converse notion of a child node
Descendant Node	Any node reachable by repeated proceeding from parent to child
Sibling Nodes	Nodes that share the same parent node
Connection	A traditional Wi-Fi association between an AP and a station. A node in ESP-WIFI-MESH will use its station interface to associate with the softAP interface of another node, thus forming a connection. The connection process includes the authentication and association processes in Wi-Fi.
Upstream Connection	The connection from a node to its parent node
Downstream Connection	The connection from a node to one of its child nodes
Wireless Hop	The portion of the path between source and destination nodes that corresponds to a single wireless connection. A data packet that traverses a single connection is known as **single-hop** whereas traversing multiple connections is known as **multi-hop**.
Subnetwork	A subnetwork is subdivision of an ESP-WIFI-MESH network which consists of a node and all of its descendant nodes. Therefore the subnetwork of the root node consists of all nodes in an ESP-WIFI-MESH network.
MAC Address	Media Access Control Address used to uniquely identify each node or router within an ESP-WIFI-MESH network.
DS	Distribution System (External IP Network)

Tree Topology

ESP-WIFI-MESH is built atop the infrastructure Wi-Fi protocol and can be thought of as a networking protocol that combines many individual Wi-Fi networks into a single WLAN. In Wi-Fi, stations are limited to a single connection with an AP (upstream connection) at any time, whilst an AP can be simultaneously connected to multiple stations (downstream connections). However ESP-WIFI-MESH allows nodes to simultaneously act as a station and an AP. Therefore a node in ESP-WIFI-MESH can have **multiple downstream connections using its softAP interface**, whilst simultaneously having **a single upstream connection using its station interface**. This naturally results in a tree network topology with a parent-child hierarchy consisting of multiple layers.

ESP-WIFI-MESH is a multiple hop (multi-hop) network meaning nodes can transmit packets to other nodes in the network through one or more wireless hops. Therefore, nodes in ESP-WIFI-MESH not only transmit their own packets, but simultaneously serve as relays for other nodes. Provided that a path exists between any two nodes on the physical layer (via one or more wireless hops), any pair of nodes within an ESP-WIFI-MESH network can communicate.

Note: The size (total number of nodes) in an ESP-WIFI-MESH network is dependent on the maximum number of layers permitted in the network, and the maximum number of downstream connections each node can have. Both of these variables can be configured to limit the size of the network.

Node Types

Root Node: The root node is the top node in the network and serves as the only interface between the ESP-WIFI-MESH network and an external IP network. The root node is connected to a conventional Wi-Fi router and relays packets to/from the external IP network to nodes within the ESP-WIFI-MESH network. **There can only be one root node within an ESP-WIFI-MESH network** and the root node's upstream connection may only be with the router. Referring to the diagram above, node A is the root node of the network.

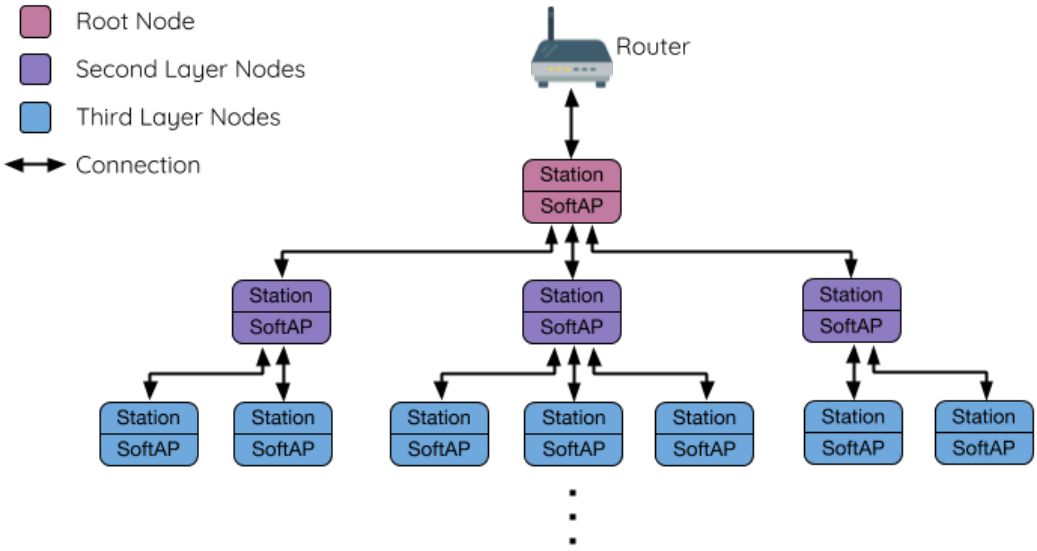

Fig. 18: ESP-WIFI-MESH Tree Topology

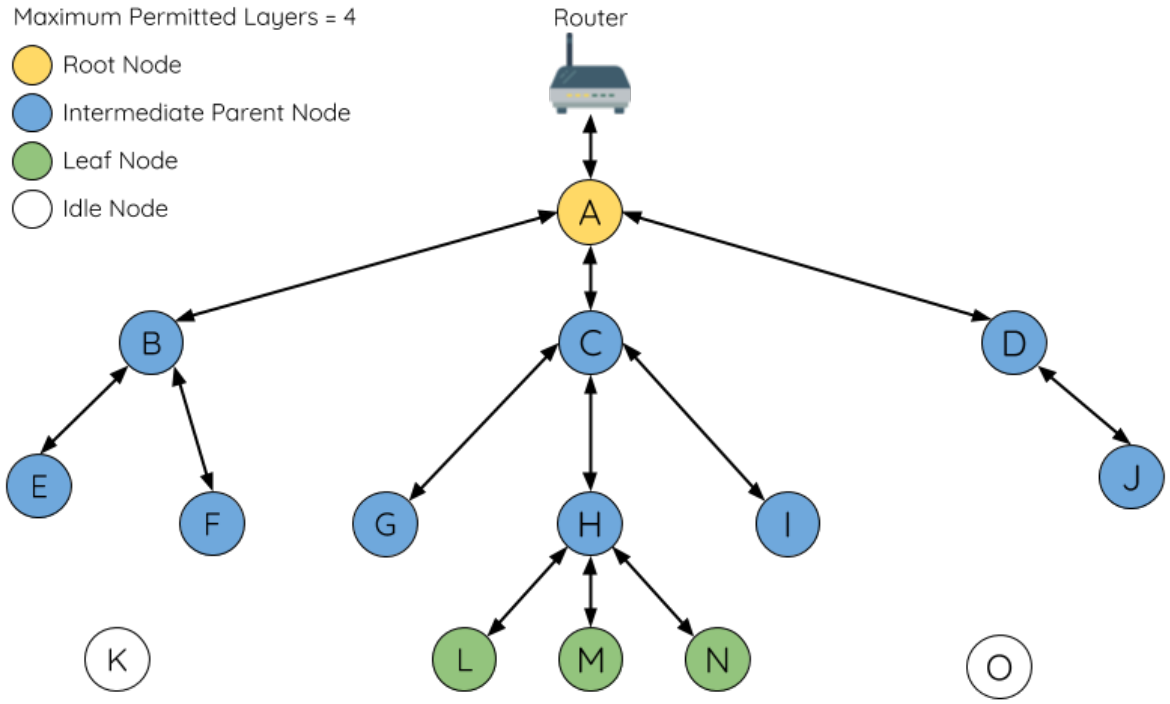

Fig. 19: ESP-WIFI-MESH Node Types

Leaf Nodes: A leaf node is a node that is not permitted to have any child nodes (no downstream connections). Therefore a leaf node can only transmit or receive its own packets, but cannot forward the packets of other nodes. If a node is situated on the network's maximum permitted layer, it will be assigned as a leaf node. This prevents the node from forming any downstream connections thus ensuring the network does not add an extra layer. Some nodes without a softAP interface (station only) will also be assigned as leaf nodes due to the requirement of a softAP interface for any downstream connections. Referring to the diagram above, nodes L/M/N are situated on the networks maximum permitted layer hence have been assigned as leaf nodes .

Intermediate Parent Nodes: Connected nodes that are neither the root node or a leaf node are intermediate parent nodes. An intermediate parent node must have a single upstream connection (a single parent node), but can have zero to multiple downstream connections (zero to multiple child nodes). Therefore an intermediate parent node can transmit and receive packets, but also forward packets sent from its upstream and downstream connections. Referring to the diagram above, nodes B to J are intermediate parent nodes. **Intermediate parent nodes without downstream connections such as nodes E/F/G/I/J are not equivalent to leaf nodes** as they are still permitted to form downstream connections in the future.

Idle Nodes: Nodes that have yet to join the network are assigned as idle nodes. Idle nodes will attempt to form an upstream connection with an intermediate parent node or attempt to become the root node under the correct circumstances (see *Automatic Root Node Selection*). Referring to the diagram above, nodes K and O are idle nodes.

Beacon Frames & RSSI Thresholding

Every node in ESP-WIFI-MESH that is able to form downstream connections (i.e. has a softAP interface) will periodically transmit Wi-Fi beacon frames. A node uses beacon frames to allow other nodes to detect its presence and know of its status. Idle nodes will listen for beacon frames to generate a list of potential parent nodes, one of which the idle node will form an upstream connection with. ESP-WIFI-MESH uses the Vendor Information Element to store metadata such as:

- Node Type (Root, Intermediate Parent, Leaf, Idle)
- Current layer of Node
- Maximum number of layers permitted in the network
- Current number of child nodes
- Maximum number of downstream connections to accept

The signal strength of a potential upstream connection is represented by RSSI (Received Signal Strength Indication) of the beacon frames of the potential parent node. To prevent nodes from forming a weak upstream connection, ESP-WIFI-MESH implements an RSSI threshold mechanism for beacon frames. If a node detects a beacon frame with an RSSI below a preconfigured threshold, the transmitting node will be disregarded when forming an upstream connection.

Panel A of the illustration above demonstrates how the RSSI threshold affects the number of parent node candidates an idle node has.

Panel B of the illustration above demonstrates how an RF shielding object can lower the RSSI of a potential parent node. Due to the RF shielding object, the area in which the RSSI of node X is above the threshold is significantly reduced. This causes the idle node to disregard node X even though node X is physically adjacent. The idle node will instead form an upstream connection with the physically distant node Y due to a stronger RSSI.

Note: Nodes technically still receive all beacon frames on the MAC layer. The RSSI threshold is an ESP-WIFI-MESH feature that simply filters out all received beacon frames that are below the preconfigured threshold.

Preferred Parent Node

When an idle node has multiple parent nodes candidates (potential parent nodes), the idle node will form an upstream connection with the **preferred parent node**. The preferred parent node is determined based on the following criteria:

- Which layer the parent node candidate is situated on
- The number of downstream connections (child nodes) the parent node candidate currently has

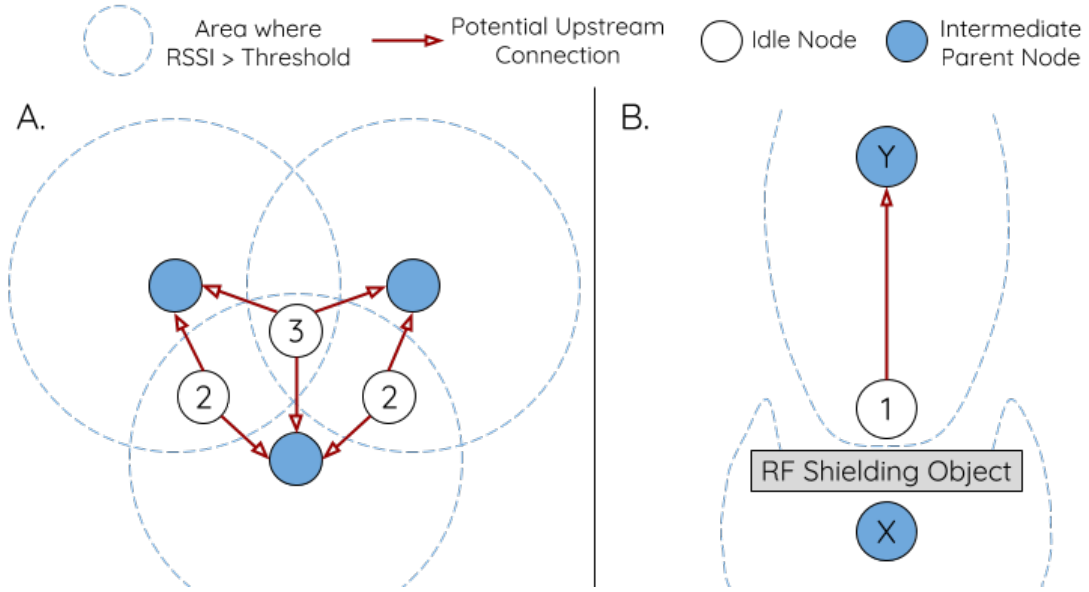

Fig. 20: Effects of RSSI Thresholding

The selection of the preferred parent node will always prioritize the parent node candidate on the shallowest layer of the network (including the root node). This helps minimize the total number of layers in an ESP-WIFI-MESH network when upstream connections are formed. For example, given a second layer node and a third layer node, the second layer node will always be preferred.

If there are multiple parent node candidates within the same layer, the parent node candidate with the least child nodes will be preferred. This criteria has the effect of balancing the number of downstream connections amongst nodes of the same layer.

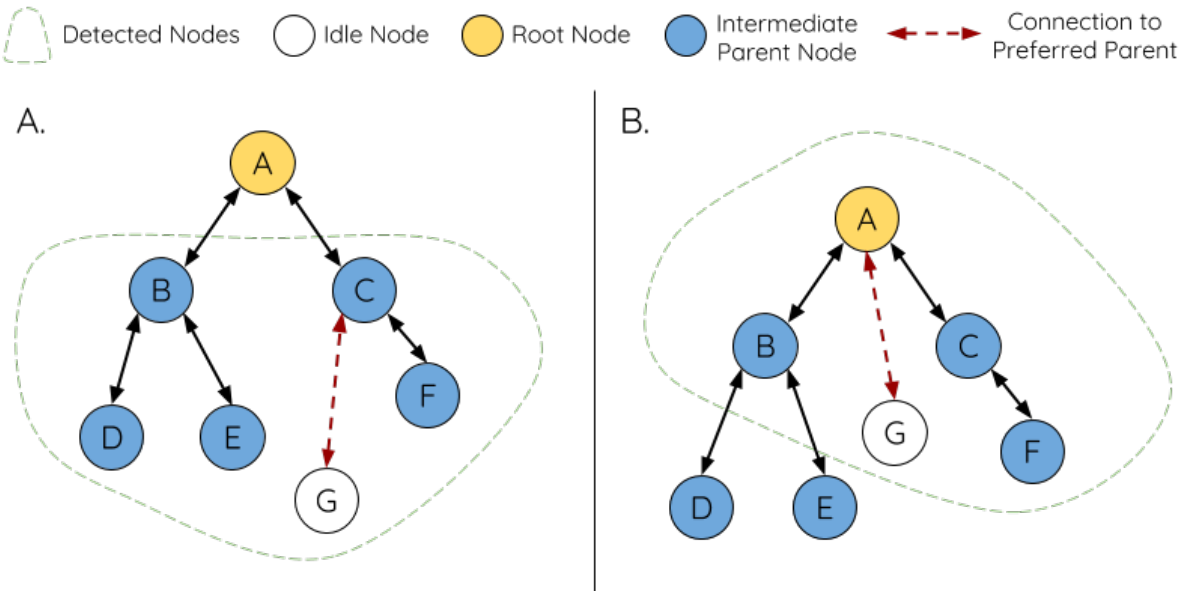

Fig. 21: Preferred Parent Node Selection

Panel A of the illustration above demonstrates an example of how the idle node G selects a preferred parent node given the five parent node candidates B/C/D/E/F. Nodes on the shallowest layer are preferred, hence nodes B/C are prioritized since they are second layer nodes whereas nodes D/E/F are on the third layer. Node C is selected as the preferred parent node due it having fewer downstream connections (fewer child nodes) compared to node B.

Panel B of the illustration above demonstrates the case where the root node is within range of the idle node G. In

other words, the root node's beacon frames are above the RSSI threshold when received by node G. The root node is always the shallowest node in an ESP-WIFI-MESH network hence is always the preferred parent node given multiple parent node candidates.

Note: Users may also define their own algorithm for selecting a preferred parent node, or force a node to only connect with a specific parent node (see the Mesh Manual Networking Example).

Routing Tables

Each node within an ESP-WIFI-MESH network will maintain its individual routing table used to correctly route ESP-WIFI-MESH packets (see *ESP-WIFI-MESH Packet*) to the correct destination node. The routing table of a particular node will **consist of the MAC addresses of all nodes within the particular node's subnetwork** (including the MAC address of the particular node itself). Each routing table is internally partitioned into multiple subtables with each subtable corresponding to the subnetwork of each child node.

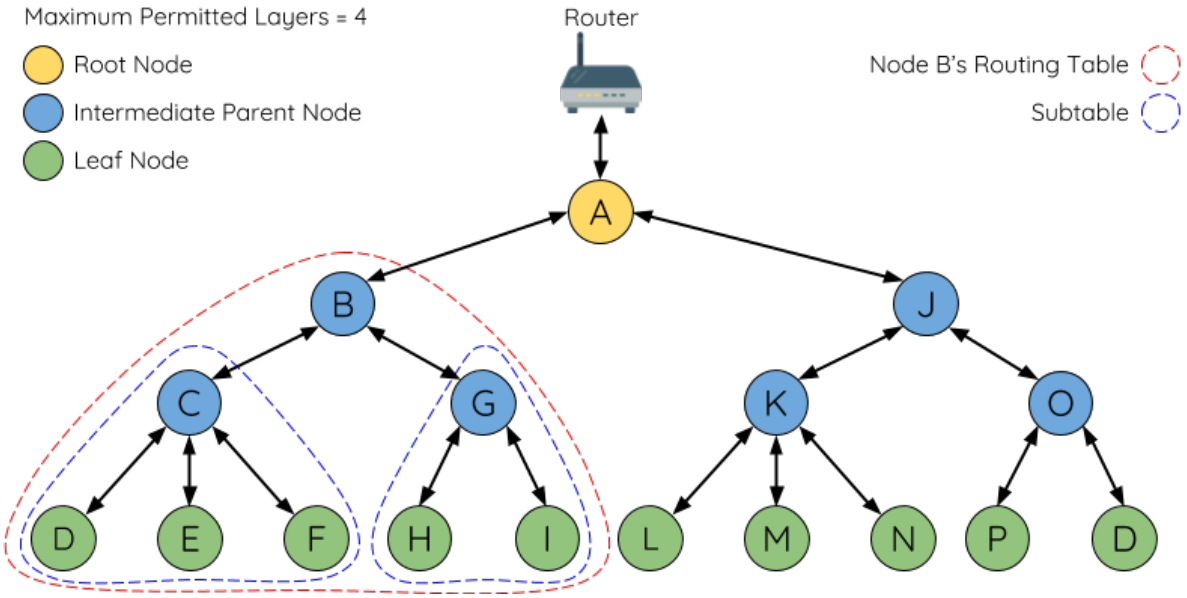

Fig. 22: ESP-WIFI-MESH Routing Tables Example

Using the diagram above as an example, the routing table of node B would consist of the MAC addresses of nodes B to I (i.e. equivalent to the subnetwork of node B). Node B's routing table is internally partitioned into two subtables containing of nodes C to F and nodes G to I (i.e. equivalent to the subnetworks of nodes C and G respectively).

ESP-WIFI-MESH utilizes routing tables to determine whether an ESP-WIFI-MESH packet should be forwarded upstream or downstream based on the following rules.

1. If the packet's destination MAC address is within the current node's routing table and is not the current node, select the subtable that contains the destination MAC address and forward the data packet downstream to the child node corresponding to the subtable.

2. If the destination MAC address is not within the current node's routing table, forward the data packet upstream to the current node's parent node. Doing so repeatedly will result in the packet arriving at the root node where the routing table should contain all nodes within the network.

Note: Users can call `esp_mesh_get_routing_table()` to obtain a node's routing table, or `esp_mesh_get_routing_table_size()` to obtain the size of a node's routing table. `esp_mesh_get_subnet_nodes_list()` can be used to obtain the corresponding subtable of a specific child node. Likewise `esp_mesh_get_subnet_nodes_num()` can be used to obtain the size of the

subtable.

4.10.4 Building a Network

General Process

Warning: Before the ESP-WIFI-MESH network building process can begin, certain parts of the configuration must be uniform across each node in the network (see `mesh_cfg_t`). Each node must be configured with **the same Mesh Network ID, router configuration, and softAP configuration**.

An ESP-WIFI-MESH network building process involves selecting a root node, then forming downstream connections layer by layer until all nodes have joined the network. The exact layout of the network can be dependent on factors such as root node selection, parent node selection, and asynchronous power-on reset. However, the ESP-WIFI-MESH network building process can be generalized into the following steps:

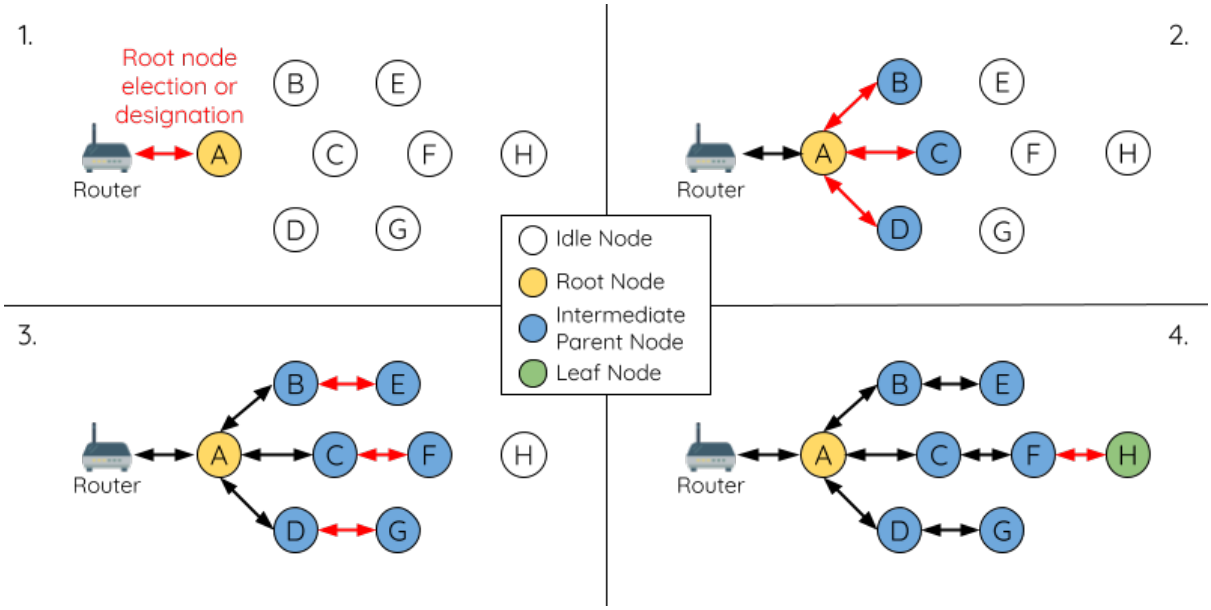

Fig. 23: ESP-WIFI-MESH Network Building Process

1. Root Node Selection The root node can be designated during configuration (see section on *User Designated Root Node*), or dynamically elected based on the signal strength between each node and the router (see *Automatic Root Node Selection*). Once selected, the root node will connect with the router and begin allowing downstream connections to form. Referring to the figure above, node A is selected to be the root node hence node A forms an upstream connection with the router.

2. Second Layer Formation Once the root node has connected to the router, idle nodes in range of the root node will begin connecting with the root node thereby forming the second layer of the network. Once connected, the second layer nodes become intermediate parent nodes (assuming maximum permitted layers > 2) hence the next layer to form. Referring to the figure above, nodes B to D are in range of the root node. Therefore nodes B to D form upstream connections with the root node and become intermediate parent nodes.

3. Formation of remaining layers The remaining idle nodes will connect with intermediate parent nodes within range thereby forming a new layer in the network. Once connected, the idles nodes become intermediate parent node or leaf nodes depending on the networks maximum permitted layers. This step is repeated until there are no more idle

nodes within the network or until the maximum permitted layer of the network has been reached. Referring to the figure above, nodes E/F/G connect with nodes B/C/D respectively and become intermediate parent nodes themselves.

4. Limiting Tree Depth To prevent the network from exceeding the maximum permitted number of layers, nodes on the maximum layer will automatically become leaf nodes once connected. This prevents any other idle node from connecting with the leaf node thereby prevent a new layer form forming. However if an idle node has no other potential parent node, it will remain idle indefinitely. Referring to the figure above, the network's number of maximum permitted layers is set to four. Therefore when node H connects, it becomes a leaf node to prevent any downstream connections from forming.

Automatic Root Node Selection

The automatic selection of a root node involves an election process amongst all idle nodes based on their signal strengths with the router. Each idle node will transmit their MAC addresses and router RSSI values via Wi-Fi beacon frames. **The MAC address is used to uniquely identify each node in the network** whilst the **router RSSI** is used to indicate a node's signal strength with reference to the router.

Each node will then simultaneously scan for the beacon frames from other idle nodes. If a node detects a beacon frame with a stronger router RSSI, the node will begin transmitting the contents of that beacon frame (i.e. voting for the node with the stronger router RSSI). The process of transmission and scanning will repeat for a preconfigured minimum number of iterations (10 iterations by default) and result in the beacon frame with the strongest router RSSI being propagated throughout the network.

After all iterations, each node will individually check for its **vote percentage** (`number of votes/number of nodes participating in election`) to determine if it should become the root node. **If a node has a vote percentage larger than a preconfigured threshold (90% by default), the node will become a root node**.

The following diagram demonstrates how an ESP-WIFI-MESH network is built when the root node is automatically selected.

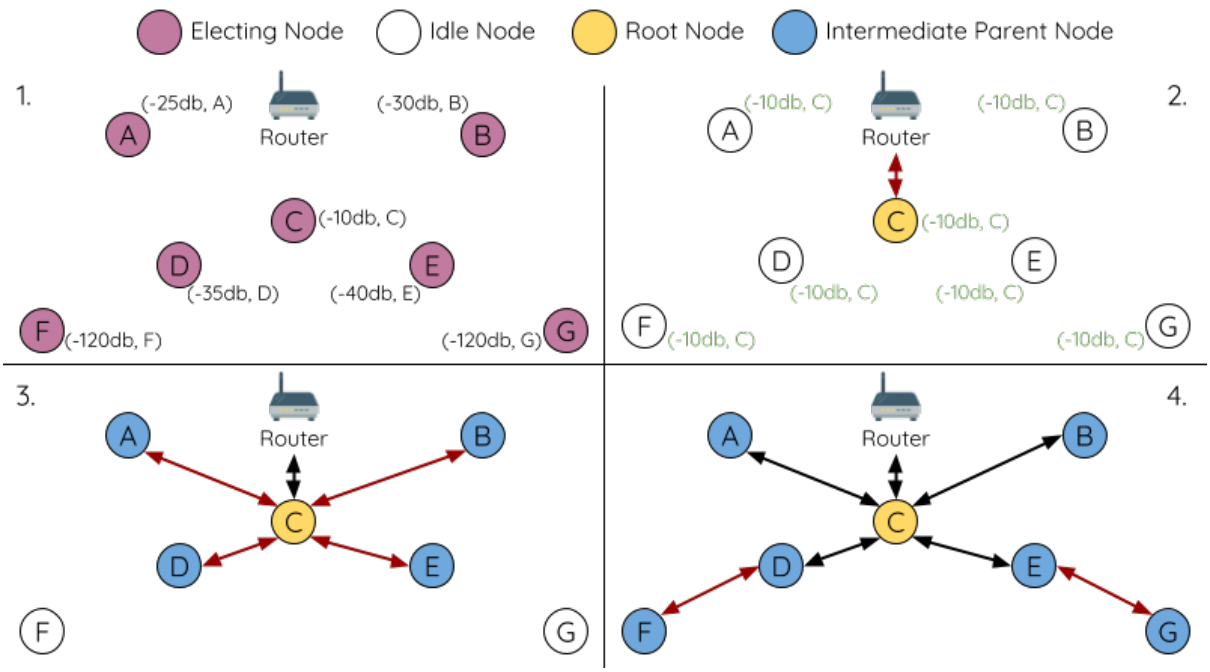

Fig. 24: Root Node Election Example

1. On power-on reset, each node begins transmitting beacon frames consisting of their own MAC addresses and their router RSSIs.

2. Over multiple iterations of transmission and scanning, the beacon frame with the strongest router RSSI is propagated throughout the network. Node C has the strongest router RSSI (-10 dB) hence its beacon frame is propagated

throughout the network. All nodes participating in the election vote for node C thus giving node C a vote percentage of 100%. Therefore node C becomes a root node and connects with the router.

3. Once Node C has connected with the router, nodes A/B/D/E connectwith node C as it is the preferred parent node (i.e. the shallowest node). Nodes A/B/D/E form the second layer of the network.

4. Node F and G connect with nodes D and E respectively and the network building process is complete.

Note: The minimum number of iterations for the election process can be configured using `esp_mesh_set_attempts()`. Users should adjust the number of iterations based on the number of nodes within the network (i.e. the larger the network the larger number of scan iterations required).

Warning: **Vote percentage threshold** can also be configured using *`esp_mesh_set_vote_percentage()`*. Setting a low vote percentage threshold **can result in two or more nodes becoming root nodes** within the same ESP-WIFI-MESH network leading to the building of multiple networks. If such is the case, ESP-WIFI-MESH has internal mechanisms to autonomously resolve the **root node conflict**. The networks of the multiple root nodes will be combined into a single network with a single root node. However, root node conflicts where two or more root nodes have the same router SSID but different router BSSID are not handled.

User Designated Root Node

The root node can also be designated by user which will entail the designated root node to directly connect with the router and forgo the election process. When a root node is designated, all other nodes within the network must also forgo the election process to prevent the occurrence of a root node conflict. The following diagram demonstrates how an ESP-WIFI-MESH network is built when the root node is designated by the user.

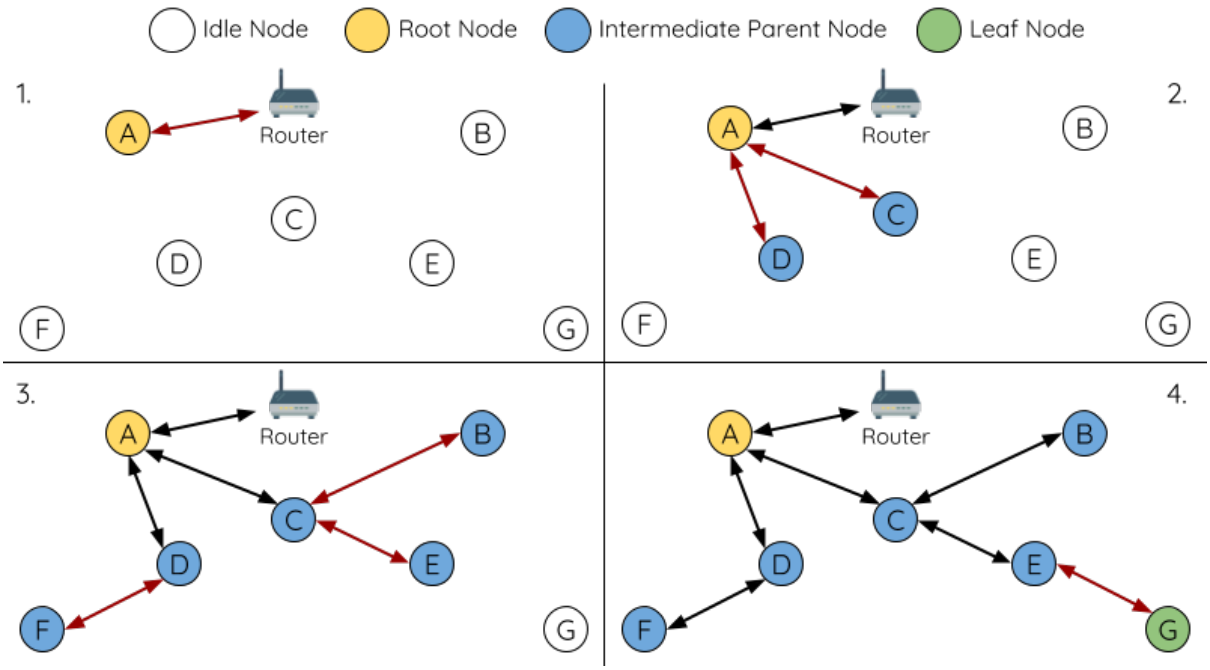

Fig. 25: Root Node Designation Example (Root Node = A, Max Layers = 4)

1. Node A is designated the root node by the user therefore directly connects with the router. All other nodes forgo the election process.

2. Nodes C/D connect with node A as their preferred parent node. Both nodes form the second layer of the network.

3. Likewise, nodes B/E connect with node C, and node F connects with node D. Nodes B/E/F form the third layer of the network.

4. Node G connects with node E, forming the fourth layer of the network. However the maximum permitted number of layers in this network is configured as four, therefore node G becomes a leaf node to prevent any new layers from forming.

Note: When designating a root node, the root node should call `esp_mesh_set_parent()` in order to directly connect with the router. Likewise, all other nodes should call `esp_mesh_fix_root()` to forgo the election process.

Parent Node Selection

By default, ESP-WIFI-MESH is self organizing meaning that each node will autonomously select which potential parent node to form an upstream connection with. The autonomously selected parent node is known as the preferred parent node. The criteria used for selecting the preferred parent node is designed to reduce the number of layers in the ESP-WIFI-MESH network and to balance the number of downstream connections between potential parent nodes (see section on *Preferred Parent Node*).

However ESP-WIFI-MESH also allows users to disable self-organizing behavior which will allow users to define their own criteria for parent node selection, or to configure nodes to have designated parent nodes (see the Mesh Manual Networking Example).

Asynchronous Power-on Reset

ESP-WIFI-MESH network building can be affected by the order in which nodes power-on. If certain nodes within the network power-on asynchronously (i.e. separated by several minutes), **the final structure of the network could differ from the ideal case where all nodes are powered on synchronously**. Nodes that are delayed in powering on will adhere to the following rules:

Rule 1: If a root node already exists in the network, the delayed node will not attempt to elect a new root node, even if it has a stronger RSSI with the router. The delayed node will instead join the network like any other idle node by connecting with a preferred parent node. If the delayed node is the designated root node, all other nodes in the network will remain idle until the delayed node powers-on.

Rule 2: If a delayed node forms an upstream connection and becomes an intermediate parent node, it may also become the new preferred parent of other nodes (i.e. being a shallower node). This will cause the other nodes to switch their upstream connections to connect with the delayed node (see *Parent Node Switching*).

Rule 3: If an idle node has a designated parent node which is delayed in powering-on, the idle node will not attempt to form any upstream connections in the absence of its designated parent node. The idle node will remain idle indefinitely until its designated parent node powers-on.

The following example demonstrates the effects of asynchronous power-on with regards to network building.

1. Nodes A/C/D/F/G/H are powered-on synchronously and begin the root node election process by broadcasting their MAC addresses and router RSSIs. Node A is elected as the root node as it has the strongest RSSI.

2. Once node A becomes the root node, the remaining nodes begin forming upstream connections layer by layer with their preferred parent nodes. The result is a network with five layers.

3. Node B/E are delayed in powering-on but neither attempt to become the root node even though they have stronger router RSSIs (-20 dB and -10 dB) compared to node A. Instead both delayed nodes form upstream connections with their preferred parent nodes A and C respectively. Both nodes B/E become intermediate parent nodes after connecting.

4. Nodes D/G switch their upstream connections as node B is the new preferred parent node due to it being on a shallower layer (second layer node). Due to the switch, the resultant network has three layers instead of the original five layers.

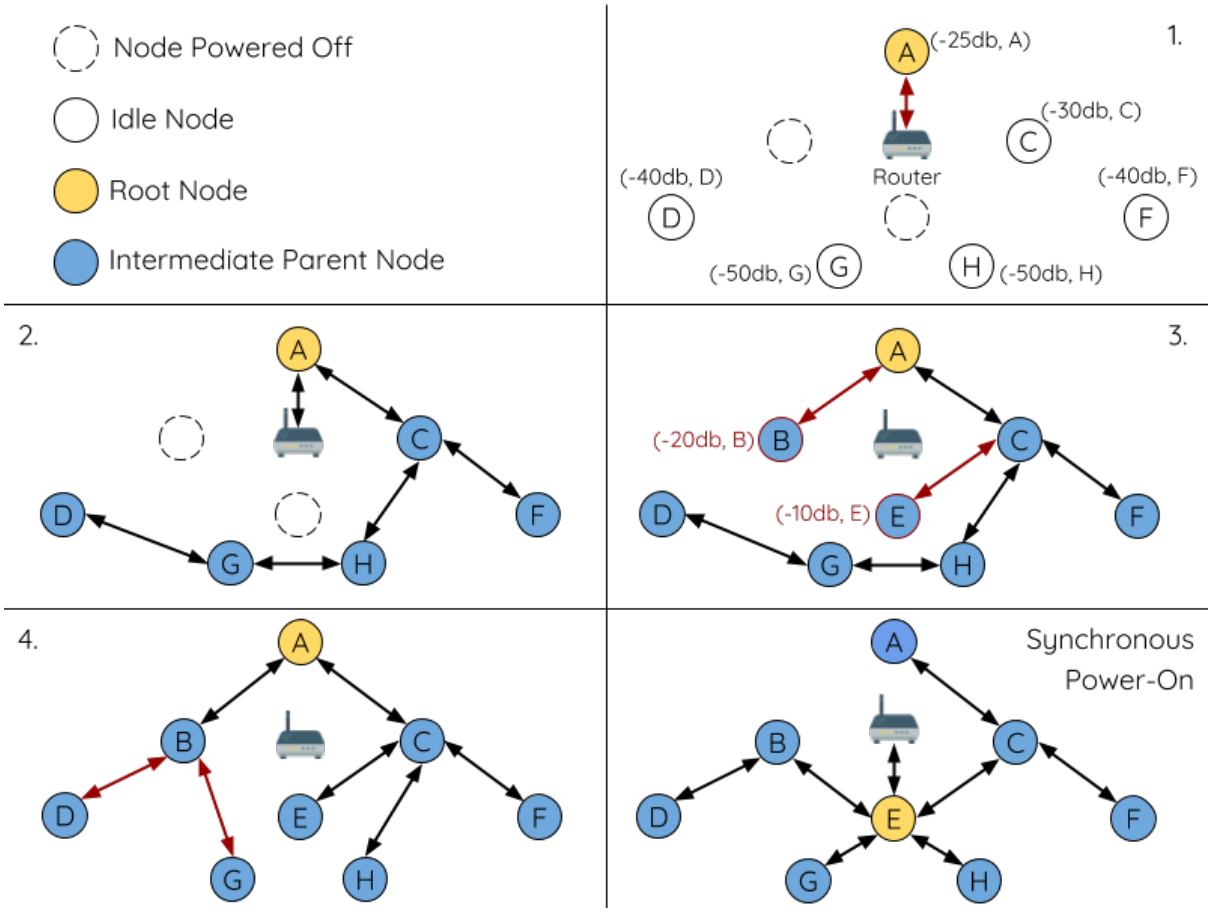

Fig. 26: Network Building with Asynchronous Power On Example

Synchronous Power-On: Had all nodes powered-on synchronously, node E would have become the root node as it has the strongest router RSSI (-10 dB). This would result in a significantly different network layout compared to the network formed under the conditions of asynchronous power-on. **However the synchronous power-on network layout can still be reached if the user manually switches the root node** (see `esp_mesh_waive_root()`).

Note: Differences in parent node selection caused by asynchronous power-on are autonomously corrected for to some extent in ESP-WIFI-MESH (see *Parent Node Switching*)

Loop-back Avoidance, Detection, and Handling

A loop-back is the situation where a particular node forms an upstream connection with one of its descendant nodes (a node within the particular node's subnetwork). This results in a circular connection path thereby breaking the tree topology. ESP-WIFI-MESH prevents loop-back during parent selection by excluding nodes already present in the selecting node's routing table (see *Routing Tables*) thus prevents a particular node from attempting to connect to any node within its subnetwork.

In the event that a loop-back occurs, ESP-WIFI-MESH utilizes a path verification mechanism and energy transfer mechanism to detect the loop-back occurrence. The parent node of the upstream connection that caused the loop-back will then inform the child node of the loop-back and initiate a disconnection.

4.10.5 Managing a Network

ESP-WIFI-MESH is a self healing network meaning it can detect and correct for failures in network routing. Failures occur when a parent node with one or more child nodes breaks down, or when the connection between a parent node and its child nodes becomes unstable. Child nodes in ESP-WIFI-MESH will autonomously select a new parent node and form an upstream connection with it to maintain network interconnectivity. ESP-WIFI-MESH can handle both Root Node Failures and Intermediate Parent Node Failures.

Root Node Failure

If the root node breaks down, the nodes connected with it (second layer nodes) will promptly detect the failure of the root node. The second layer nodes will initially attempt to reconnect with the root node. However after multiple failed attempts, the second layer nodes will initialize a new round of root node election. **The second layer node with the strongest router RSSI will be elected as the new root node** whilst the remaining second layer nodes will form an upstream connection with the new root node (or a neighboring parent node if not in range).

If the root node and multiple downstream layers simultaneously break down (e.g. root node, second layer, and third layer), the shallowest layer that is still functioning will initialize the root node election. The following example illustrates an example of self healing from a root node break down.

1. Node C is the root node of the network. Nodes A/B/D/E are second layer nodes connected to node C.

2. Node C breaks down. After multiple failed attempts to reconnect, the second layer nodes begin the election process by broadcasting their router RSSIs. Node B has the strongest router RSSI.

3. Node B is elected as the root node and begins accepting downstream connections. The remaining second layer nodes A/D/E form upstream connections with node B thus the network is healed and can continue operating normally.

Note: If a designated root node breaks down, the remaining nodes **will not autonomously attempt to elect a new root node** as an election process will never be attempted whilst a designated root node is used.

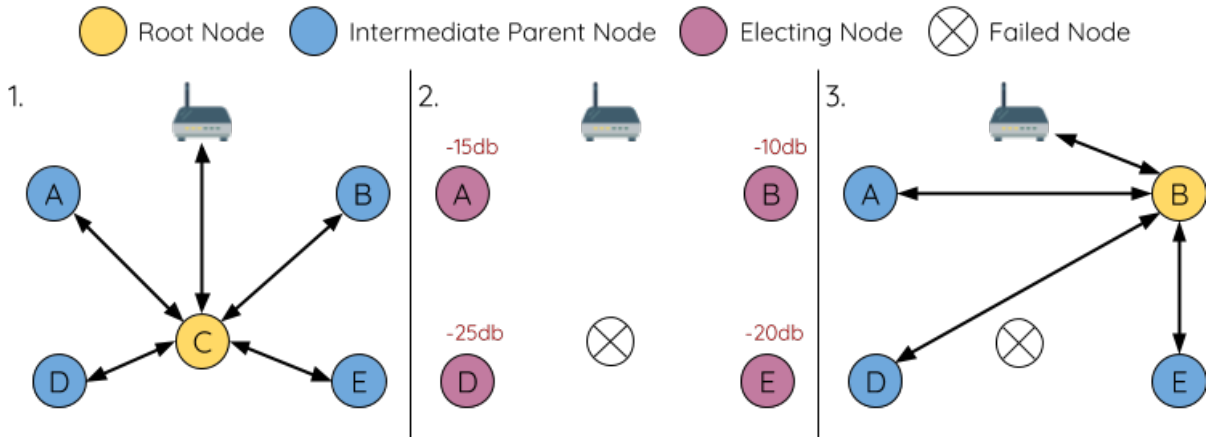

Fig. 27: Self Healing From Root Node Failure

Intermediate Parent Node Failure

If an intermediate parent node breaks down, the disconnected child nodes will initially attempt to reconnect with the parent node. After multiple failed attempts to reconnect, each child node will begin to scan for potential parent nodes (see *Beacon Frames & RSSI Thresholding*).

If other potential parent nodes are available, each child node will individually select a new preferred parent node (see *Preferred Parent Node*) and form an upstream connection with it. If there are no other potential parent nodes for a particular child node, it will remain idle indefinitely.

The following diagram illustrates an example of self healing from an Intermediate Parent Node break down.

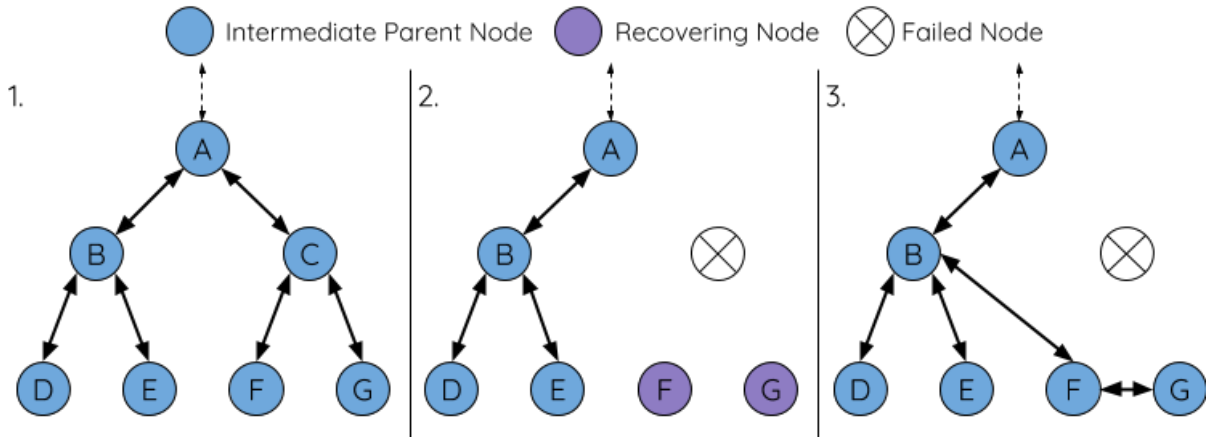

Fig. 28: Self Healing From Intermediate Parent Node Failure

1. The following branch of the network consists of nodes A to G.

2. Node C breaks down. Nodes F/G detect the break down and attempt to reconnect with node C. After multiple failed attempts to reconnect, nodes F/G begin to select a new preferred parent node.

3. Node G is out of range from any other parent node hence remains idle for the time being. Node F is in range of nodes B/E, however node B is selected as it is the shallower node. Node F becomes an intermediate parent node after connecting with Node B thus node G can connect with node F. The network is healed, however the network routing as been affected and an extra layer has been added.

Note: If a child node has a designated parent node that breaks down, the child node will make no attempt to connect with a new parent node. The child node will remain idle indefinitely.

Root Node Switching

ESP-WIFI-MESH does not automatically switch the root node unless the root node breaks down. Even if the root node's router RSSI degrades to the point of disconnection, the root node will remain unchanged. Root node switching is the act of explicitly starting a new election such that a node with a stronger router RSSI will be elected as the new root node. This can be a useful method of adapting to degrading root node performance.

To trigger a root node switch, the current root node must explicitly call `esp_mesh_waive_root()` to trigger a new election. The current root node will signal all nodes within the network to begin transmitting and scanning for beacon frames (see *Automatic Root Node Selection*) **whilst remaining connected to the network (i.e. not idle)**. If another node receives more votes than the current root node, a root node switch will be initiated. **The root node will remain unchanged otherwise**.

A newly elected root node sends a **switch request** to the current root node which in turn will respond with an acknowledgment signifying both nodes are ready to switch. Once the acknowledgment is received, the newly elected root node will disconnect from its parent and promptly form an upstream connection with the router thereby becoming the new root node of the network. The previous root node will disconnect from the router **whilst maintaining all of its downstream connections** and enter the idle state. The previous root node will then begin scanning for potential parent nodes and selecting a preferred parent.

The following diagram illustrates an example of a root node switch.

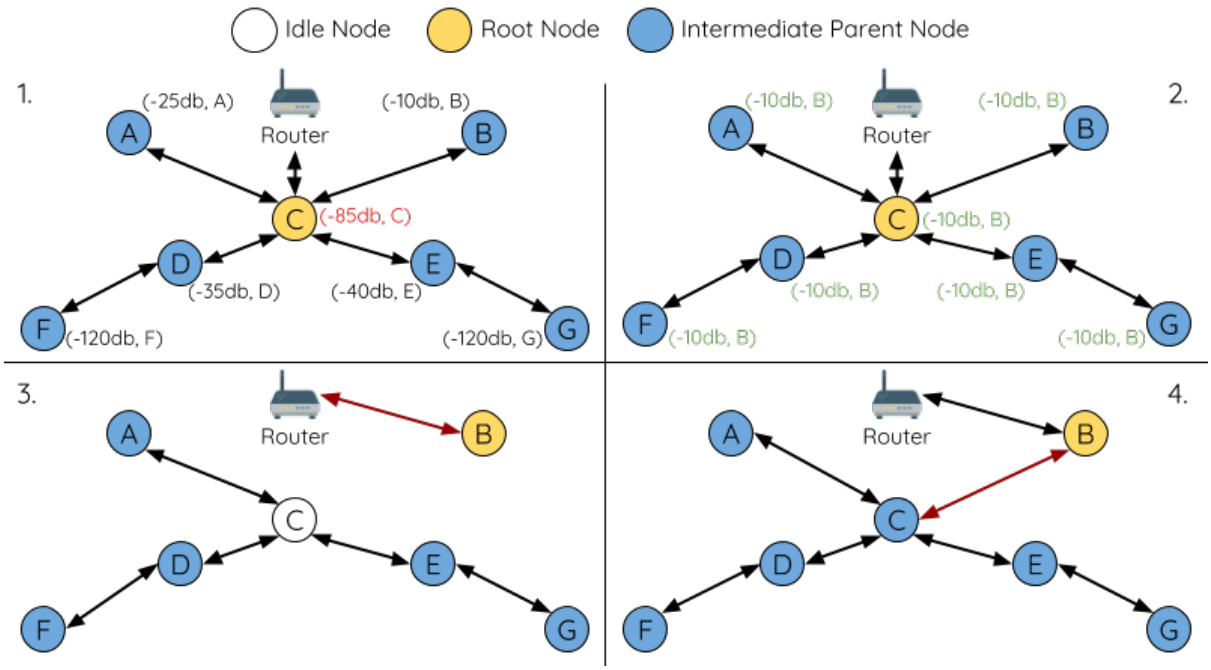

Fig. 29: Root Node Switch Example

1. Node C is the current root node but has degraded signal strength with the router (-85db). The node C triggers a new election and all nodes begin transmitting and scanning for beacon frames **whilst still being connected**.

2. After multiple rounds of transmission and scanning, node B is elected as the new root node. Node B sends node C a **switch request** and node C responds with an acknowledgment.

3. Node B disconnects from its parent and connects with the router becoming the network's new root node. Node C disconnects from the router, enters the idle state, and begins scanning for and selecting a new preferred parent node. **Node C maintains all its downstream connections throughout this process**.

4. Node C selects node B as its preferred parent node, forms an upstream connection, and becomes a second layer node. The network layout is similar after the switch as node C still maintains the same subnetwork. However each node in node C's subnetwork has been placed one layer deeper as a result of the switch. *Parent Node Switching* may adjust the network layout afterwards if any nodes have a new preferred parent node as a result of the root node switch.

Note: Root node switching must require an election hence is only supported when using a self-organized ESP-WIFI-MESH network. In other words, root node switching cannot occur if a designated root node is used.

Parent Node Switching

Parent Node Switching entails a child node switching its upstream connection to another parent node of a shallower layer. **Parent Node Switching occurs autonomously** meaning that a child node will change its upstream connection automatically if a potential parent node of a shallower layer becomes available (i.e. due to a *Asynchronous Power-on Reset*).

All potential parent nodes periodically transmit beacon frames (see *Beacon Frames & RSSI Thresholding*) allowing for a child node to scan for the availability of a shallower parent node. Due to parent node switching, a self-organized ESP-WIFI-MESH network can dynamically adjust its network layout to ensure each connection has a good RSSI and that the number of layers in the network is minimized.

4.10.6 Data Transmission

ESP-WIFI-MESH Packet

ESP-WIFI-MESH network data transmissions use ESP-WIFI-MESH packets. ESP-WIFI-MESH packets are **entirely contained within the frame body of a Wi-Fi data frame**. A multi-hop data transmission in an ESP-WIFI-MESH network will involve a single ESP-WIFI-MESH packet being carried over each wireless hop by a different Wi-Fi data frame.

The following diagram shows the structure of an ESP-WIFI-MESH packet and its relation with a Wi-Fi data frame.

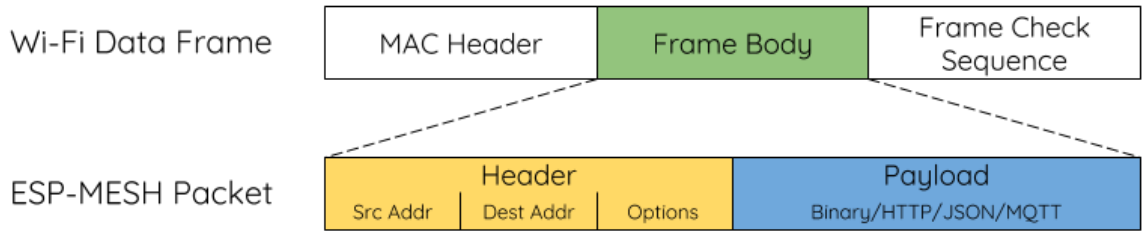

Fig. 30: ESP-WIFI-MESH Packet

The header of an ESP-WIFI-MESH packet contains the MAC addresses of the source and destination nodes. The options field contains information pertaining to the special types of ESP-WIFI-MESH packets such as a group transmission or a packet originating from the external IP network (see `MESH_OPT_SEND_GROUP` and `MESH_OPT_RECV_DS_ADDR`).

The payload of an ESP-WIFI-MESH packet contains the actual application data. This data can be raw binary data, or encoded under an application layer protocol such as HTTP, MQTT, and JSON (see `mesh_proto_t`).

Note: When sending an ESP-WIFI-MESH packet to the external IP network, the destination address field of the header will contain the IP address and port of the target server rather than the MAC address of a node (see `mesh_addr_t`). Furthermore the root node will handle the formation of the outgoing TCP/IP packet.

Group Control & Multicasting

Multicasting is a feature that allows a single ESP-WIFI-MESH packet to be transmitted simultaneously to multiple nodes within the network. Multicasting in ESP-WIFI-MESH can be achieved by either specifying a list

of target nodes, or specifying a preconfigured group of nodes. Both methods of multicasting are called via *esp_mesh_send()*.

To multicast by specifying a list of target nodes, users must first set the ESP-WIFI-MESH packet's destination address to the **Multicast-Group Address** (`01:00:5E:xx:xx:xx`). This signifies that the ESP-WIFI-MESH packet is a multicast packet with a group of addresses, and that the address should be obtained from the header options. Users must then list the MAC addresses of the target nodes as options (see *mesh_opt_t* and *MESH_OPT_SEND_GROUP*). This method of multicasting requires no prior setup but can incur a large amount of overhead data as each target node's MAC address must be listed in the options field of the header.

Multicasting by group allows a ESP-WIFI-MESH packet to be transmitted to a preconfigured group of nodes. Each grouping is identified by a unique ID, and a node can be placed into a group via *esp_mesh_set_group_id()*. Multicasting to a group involves setting the destination address of the ESP-WIFI-MESH packet to the target group ID. Furthermore, the *MESH_DATA_GROUP* flag must set. Using groups to multicast incurs less overhead, but requires nodes to previously added into groups.

Note: During a multicast, all nodes within the network still receive the ESP-WIFI-MESH packet on the MAC layer. However, nodes not included in the MAC address list or the target group will simply filter out the packet.

Broadcasting

Broadcasting is a feature that allows a single ESP-WIFI-MESH packet to be transmitted simultaneously to all nodes within the network. Each node essentially forwards a broadcast packet to all of its upstream and downstream connections such that the packet propagates throughout the network as quickly as possible. However, ESP-WIFI-MESH utilizes the following methods to avoid wasting bandwidth during a broadcast.

1. When an intermediate parent node receives a broadcast packet from its parent, it will forward the packet to each of its child nodes whilst storing a copy of the packet for itself.

2. When an intermediate parent node is the source node of the broadcast, it will transmit the broadcast packet upstream to is parent node and downstream to each of its child nodes.

3. When an intermediate parent node receives a broadcast packet from one of its child nodes, it will forward the packet to its parent node and each of its remaining child nodes whilst storing a copy of the packet for itself.

4. When a leaf node is the source node of a broadcast, it will directly transmit the packet to its parent node.

5. When the root node is the source node of a broadcast, the root node will transmit the packet to all of its child nodes.

6. When the root node receives a broadcast packet from one of its child nodes, it will forward the packet to each of its remaining child nodes whilst storing a copy of the packet for itself.

7. When a node receives a broadcast packet with a source address matching its own MAC address, the node will discard the broadcast packet.

8. When an intermediate parent node receives a broadcast packet from its parent node which was originally transmitted from one of its child nodes, it will discard the broadcast packet

Upstream Flow Control

ESP-WIFI-MESH relies on parent nodes to control the upstream data flow of their immediate child nodes. To prevent a parent node's message buffer from overflowing due to an overload of upstream transmissions, a parent node will allocate a quota for upstream transmissions known as a **receiving window** for each of its child nodes. **Each child node must apply for a receiving window before it is permitted to transmit upstream**. The size of a receiving window can be dynamically adjusted. An upstream transmission from a child node to the parent node consists of the following steps:

1. Before each transmission, the child node sends a window request to its parent node. The window request consists of a sequence number which corresponds to the child node's data packet that is pending transmission.

2. The parent node receives the window request and compares the sequence number with the sequence number of the previous packet sent by the child node. The comparison is used to calculate the size of the receiving window which is transmitted back to the child node.

3. The child node transmits the data packet in accordance with the window size specified by the parent node. If the child node depletes its receiving window, it must obtain another receiving windows by sending a request before it is permitted to continue transmitting.

Note: ESP-WIFI-MESH does not support any downstream flow control.

Warning: Due to *Parent Node Switching*, packet loss may occur during upstream transmissions.

Due to the fact that the root node acts as the sole interface to an external IP network, it is critical that downstream nodes are aware of the root node's connection status with the external IP network. Failing to do so can lead to nodes attempting to pass data upstream to the root node whilst it is disconnected from the IP network. This results in unnecessary transmissions and packet loss. ESP-WIFI-MESH address this issue by providing a mechanism to stabilize the throughput of outgoing data based on the connection status between the root node and the external IP network. The root node can broadcast its external IP network connection status to all other nodes by calling `esp_mesh_post_toDS_state()`.

Bi-Directional Data Stream

The following diagram illustrates the various network layers involved in an ESP-WIFI-MESH Bidirectional Data Stream.

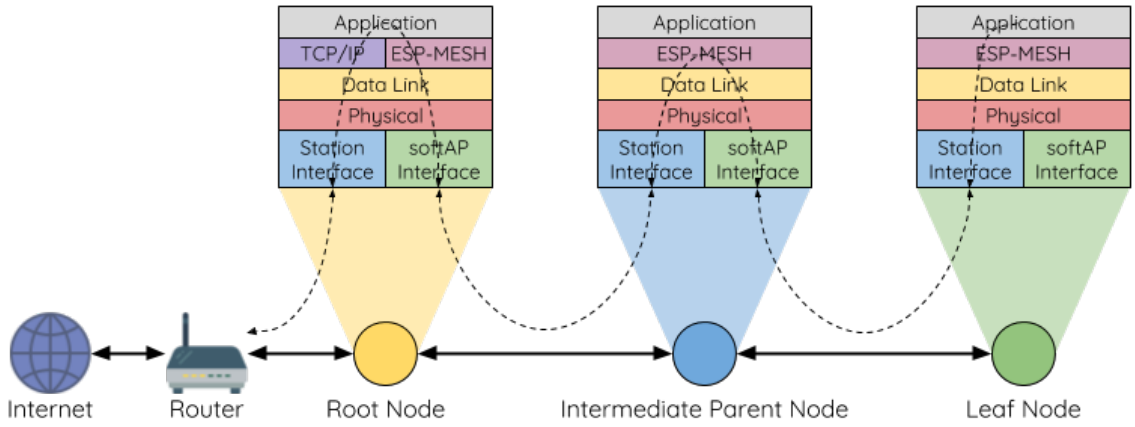

Fig. 31: ESP-WIFI-MESH Bidirectional Data Stream

Due to the use of *Routing Tables*, **ESP-WIFI-MESH is able to handle pack forwarding entirely on the mesh layer**. A TCP/IP layer is only required on the root node when it transmits/receives a packet to/from an external IP network.

4.10.7 Channel Switching

Background

In traditional Wi-Fi networks, **channels** are predetermined frequency ranges. In an infrastructure basic service set (BSS), the serving AP and its connected stations must be on the same operating channels (1 to 14) in which beacons are transmitted. Physically adjacent BSS (Basic Service Sets) operating on the same channel can lead to interference and degraded performance.

In order to allow a BSS adapt to changing physical layer conditions and maintain performance, Wi-Fi contains mechanisms for **network channel switching**. A network channel switch is an attempt to move a BSS to a new operating channel whilst minimizing disruption to the BSS during this process. However it should be recognized that a channel switch may be unsuccessful in moving all stations to the new operating channel.

In an infrastructure Wi-Fi network, network channel switches are triggered by the AP with the aim of having the AP and all connected stations synchronously switch to a new channel. Network channel switching is implemented by embedding a **Channel Switch Announcement (CSA)** element within the AP's periodically transmitted beacon frames. The CSA element is used to advertise to all connected stations regarding an upcoming network channel switch and will be included in multiple beacon frames up until the switch occurs.

A CSA element contains information regarding the **New Channel Number** and a **Channel Switch Count** which indicates the number of beacon frame intervals (TBTTs) remaining until the network channel switch occurs. Therefore, the Channel Switch Count is decremented every beacon frame and allows connected stations to synchronize their channel switch with the AP.

ESP-WIFI-MESH Network Channel Switching

ESP-WIFI-MESH Network Channel Switching also utilize beacon frames that contain a CSA element. However, being a multi-hop network makes the switching process in ESP-WIFI-MESH is more complex due to the fact that a beacon frame might not be able to reach all nodes within the network (i.e. in a single hop). Therefore, an ESP-WIFI-MESH network relies on nodes to forward the CSA element so that it is propagated throughout the network.

When an intermediate parent node with one or more child nodes receives a beacon frame containing a CSA, the node will forward the CSA element by including the element in its next transmitted beacon frame (i.e. with the same **New Channel Number** and **Channel Switch Count**). Given that all nodes within an ESP-WIFI-MESH network receive the same CSA, the nodes can synchronize their channel switches using the Channel Switch Count, albeit with a short delay due to CSA element forwarding.

An ESP-WIFI-MESH network channel switch can be triggered by either the router or the root node.

Root Node Triggered **A root node triggered channel switch can only occur when the ESP-WIFI-MESH network is not connected to a router**. By calling `esp_mesh_switch_channel()`, the root node will set an initial Channel Switch Count value and begin including a CSA element in its beacon frames. Each CSA element is then received by second layer nodes, and forwarded downstream in the their own beacon frames.

Router Triggered When an ESP-WIFI-MESH network is connected to a router, the entire network must use the same channel as the router. Therefore, **the root node will not be permitted to trigger a channel switch when it is connected to a router**.

When the root node receives beacon frame containing a CSA element from the router, **the root node will set Channel Switch Count value in the CSA element to a custom value before forwarding it downstream via beacon frames**. It will also decrement the Channel Switch Count of subsequent CSA elements relative to the custom value. This custom value can be based on factors such as the number of network layers, the current number of nodes etc.

The setting the Channel Switch Count value to a custom value is due to the fact that the ESP-WIFI-MESH network and its router may have a different and varying beacon intervals. Therefore, the Channel Switch Count value provided by the router is irrelevant to an ESP-WIFI-MESH network. By using a custom value, nodes within the ESP-WIFI-MESH network are able to switch channels synchronously relative to the ESP-WIFI-MESH network's beacon interval. However, this will also result in the ESP-WIFI-MESH network's channel switch being unsynchronized with the channel switch of the router and its connected stations.

Impact of Network Channel Switching

- **Due to the ESP-WIFI-MESH network channel switch being unsynchronized with the router's channel switch, there w**
  - The ESP-WIFI-MESH network's channel switch time is dependent on the ESP-WIFI-MESH network's beacon interval and the root node's custom Channel Switch Count value.

  - The channel discrepancy prevents any data exchange between the root node and the router during that ESP-WIFI-MESH network's switch.
  - In the ESP-WIFI-MESH network, the root node and intermediate parent nodes will request their connected child nodes to stop transmissions until the channel switch takes place by setting the **Channel Switch Mode** field in the CSA element to 1.
  - Frequent router triggered network channel switches can degrade the ESP-WIFI-MESH network's performance. Note that this can be caused by the ESP-WIFI-MESH network itself (e.g. due to wireless medium contention with ESP-WIFI-MESH network). If this is the case, users should disable the automatic channel switching on the router and use a specified channel instead.
- **When there is a temporary channel discrepancy, the root node remains technically connected to the router.**
  - Disconnection occurs after the root node fails to receive any beacon frames or probe responses from the router over a fixed number of router beacon intervals.
  - Upon disconnection, the root node will automatically re-scan all channels for the presence of a router.
- **If the root node is unable to receive any of the router's CSA beacon frames (e.g. due to short switch time given by the**
  - After the router switches channels, the root node will no longer be able to receive the router's beacon frames and probe responses and result in a disconnection after a fixed number of beacon intervals.
  - The root node will re-scan all channels for the router after disconnection.
  - The root node will maintain downstream connections throughout this process.

Note: Although ESP-WIFI-MESH network channel switching aims to move all nodes within the network to a new operating channel, it should be recognized that a channel switch might not successfully move all nodes (e.g. due to reasons such as node failures).

Channel and Router Switching Configuration

ESP-WIFI-MESH allows for autonomous channel switching to be enabled/disabled via configuration. Likewise, autonomous router switching (i.e. when a root node autonomously connects to another router) can also be enabled/disabled by configuration. Autonomous channel switching and router switching is dependent on the following configuration parameters and run-time conditions.

Allow Channel Switch: This parameter is set via the `allow_channel_switch` field of the *`mesh_cfg_t`* structure and permits an ESP-WIFI-MESH network to dynamically switch channels when set.

Preset Channel: An ESP-WIFI-MESH network can have a preset channel by setting the `channel` field of the *`mesh_cfg_t`* structure to the desired channel number. If this field is unset, the `allow_channel_switch` parameter is overridden such that channel switches are always permitted.

Allow Router Switch: This parameter is set via the `allow_router_switch` field of the *`mesh_router_t`* and permits an ESP-WIFI-MESH to dynamically switch to a different router when set.

Preset Router BSSID: An ESP-WIFI-MESH network can have a preset router by setting the `bssid` field of the *`mesh_router_t`* structure to the BSSID of the desired router. If this field is unset, the `allow_router_switch` parameter is overridden such that router switches are always permitted.

Root Node Present: The presence of a root node will can also affect whether or a channel or router switch is permitted.

The following table illustrates how the different combinations of parameters/conditions affect whether channel switching and/or router switching is permitted. Note that *X* represents a "don't care" for the parameter.

Preset Channel	Allow Channel Switch	Preset Router BSSID	Allow Router Switch	Root Node Present	Permitted Switches ?
N	X	N	X	X	Channel and Router
N	X	Y	N	X	Channel Only
N	X	Y	Y	X	Channel and Router
Y	Y	N	X	X	Channel and Router
Y	N	N	X	N	Router Only
Y	N	N	X	Y	Channel and Router
Y	Y	Y	N	X	Channel Only
Y	N	Y	N	N	N
Y	N	Y	N	Y	Channel Only
Y	Y	Y	Y	X	Channel and Router
Y	N	Y	Y	N	Router Only
Y	N	Y	Y	Y	Channel and Router

4.10.8 Performance

The performance of an ESP-WIFI-MESH network can be evaluated based on multiple metrics such as the following:

Network Building Time: The amount of time taken to build an ESP-WIFI-MESH network from scratch.

Healing Time: The amount of time taken for the network to detect a node break down and carry out appropriate actions to heal the network (such as generating a new root node or forming new connections).

Per-hop latency: The latency of data transmission over one wireless hop. In other words, the time taken to transmit a data packet from a parent node to a child node or vice versa.

Network Node Capacity: The total number of nodes the ESP-WIFI-MESH network can simultaneously support. This number is determined by the maximum number of downstream connections a node can accept and the maximum number of layers permissible in the network.

The following table lists the common performance figures of an ESP-WIFI-MESH network:

- Network Building Time: < 60 seconds
- **Healing time:**
  - Root node break down: < 10 seconds
  - Child node break down: < 5 seconds
- Per-hop latency: 10 to 30 milliseconds

Note: The following test conditions were used to generate the performance figures above.

- Number of test devices: **100**
- Maximum Downstream Connections to Accept: **6**
- Maximum Permissible Layers: **6**

Note: Throughput depends on packet error rate and hop count.

Note: The throughput of root node's access to the external IP network is directly affected by the number of nodes in the ESP-WIFI-MESH network and the bandwidth of the router.

Note: The performance figures can vary greatly between installations based on network configuration and operating environment.

4.10.9 Further Notes

- Data transmission uses Wi-Fi WPA2-PSK encryption
- Mesh networking IE uses AES encryption

Router and internet icon made by Smashicons from www.flaticon.com

4.11 Core Dump

4.11.1 Overview

ESP-IDF provides support to generate core dumps on unrecoverable software errors. This useful technique allows post-mortem analysis of software state at the moment of failure. Upon the crash system enters panic state, prints some information and halts or reboots depending configuration. User can choose to generate core dump in order to analyse the reason of failure on PC later on. Core dump contains snapshots of all tasks in the system at the moment of failure. Snapshots include tasks control blocks (TCB) and stacks. So it is possible to find out what task, at what instruction (line of code) and what callstack of that task lead to the crash. It is also possible dumping variables content on demand if previously attributed accordingly. ESP-IDF provides special script *espcoredump.py* to help users to retrieve and analyse core dumps. This tool provides two commands for core dumps analysis:

- `info_corefile` - prints crashed task' s registers, callstack, list of available tasks in the system, memory regions and contents of memory stored in core dump (TCBs and stacks)
- `dbg_corefile` - creates core dump ELF file and runs GDB debug session with this file. User can examine memory, variables and tasks states manually. Note that since not all memory is saved in core dump only values of variables allocated on stack will be meaningful

For more information about core dump internals see the - Core dump internals

4.11.2 Configurations

There are a number of core dump related configuration options which user can choose in project configuration menu (`idf.py menuconfig`).

Core dump data destination (Components -> Core dump -> Data destination)

- Save core dump to Flash (Flash)
- Print core dump to UART (UART)
- Disable core dump generation (None)

Core dump data format (Components -> Core dump -> Core dump data format)

- ELF format (Executable and Linkable Format file for core dump)
- Binary format (Basic binary format for core dump)

The ELF format contains extended features and allow to save more information about broken tasks and crashed software but it requires more space in the flash memory. This format of core dump is recommended for new software designs and is flexible enough to extend saved information for future revisions.

The Binary format is kept for compatibility standpoint, it uses less space in the memory to keep data and provides better performance.

Core dump data integrity check (Components -> Core dump -> Core dump data integrity check)

- Use CRC32 for core dump integrity verification

- Use SHA256 for core dump integrity verification (only work in ELF format)

The CRC32 option provides better calculation performance and consumes less memory for storage.

The SHA256 hash algorithm provides greater probability of detecting corruption than a CRC32 with multiple bit errors.

Maximum number of tasks snapshots in core dump (Components -> Core dump -> Maximum number of tasks)

Delay before core dump is printed to UART (Components -> Core dump -> Delay before print to UART)

The value is in ms.

Handling of UART core dumps in IDF Monitor (Components -> Core dump -> Delay before print to UART)

The value is base64 encoded.

- Decode and show summary (info_corefile)
- Don't decode

4.11.3 Save core dump to flash

When this option is selected core dumps are saved to special partition on flash. When using default partition table files which are provided with ESP-IDF it automatically allocates necessary space on flash, But if user wants to use its own layout file together with core dump feature it should define separate partition for core dump as it is shown below:

```
# Name,   Type, SubType, Offset,  Size
# Note: if you have increased the bootloader size, make sure to update the offsets␣
↪to avoid overlap
nvs,      data, nvs,     0x9000,  0x6000
phy_init, data, phy,     0xf000,  0x1000
factory,  app,  factory, 0x10000, 1M
coredump, data, coredump,,        64K
```

There are no special requirements for partition name. It can be chosen according to the user application needs, but partition type should be 'data' and sub-type should be 'coredump'. Also when choosing partition size note that core dump data structure introduces constant overhead of 20 bytes and per-task overhead of 12 bytes. This overhead does not include size of TCB and stack for every task. So partition size should be at least 20 + max tasks number x (12 + TCB size + max task stack size) bytes.

The example of generic command to analyze core dump from flash is: `espcoredump.py -p </path/to/serial/port> info_corefile </path/to/program/elf/file>` or `espcoredump.py -p </path/to/serial/port> dbg_corefile </path/to/program/elf/file>`

4.11.4 Print core dump to UART

When this option is selected base64-encoded core dumps are printed on UART upon system panic. In this case user should save core dump text body to some file manually and then run the following command: `espcoredump.py --chip <target_chip_type> info_corefile -t b64 -c </path/to/saved/base64/text> </path/to/program/elf/file>` or `espcoredump.py --chip <target_chip_type> dbg_corefile -t b64 -c </path/to/saved/base64/text> </path/to/program/elf/file>`

Base64-encoded body of core dump will be between the following header and footer:

```
================= CORE DUMP START =================
<body of base64-encoded core dump, save it to file on disk>
================= CORE DUMP END ===================
```

The `CORE DUMP START` and `CORE DUMP END` lines must not be included in core dump text file.

4.11.5 ROM Functions in Backtraces

It is possible situation that at the moment of crash some tasks or/and crashed task itself have one or more ROM functions in their callstacks. Since ROM is not part of the program ELF it will be impossible for GDB to parse such callstacks, because it tries to analyse functions' prologues to accomplish that. In that case callstack printing will be broken with error message at the first ROM function. To overcome this issue you can use ROM ELF provided by Espressif (https://dl.espressif.com/dl/esp32_rom.elf) and pass it to 'espcoredump.py'.

4.11.6 Dumping variables on demand

Sometimes you want to read the last value of a variable to understand the root cause of a crash. Core dump supports retrieving variable data over GDB by attributing special notations declared variables.

Supported notations and RAM regions

- `COREDUMP_DRAM_ATTR` places variable into DRAM area which will be included into dump.
- `COREDUMP_RTC_ATTR` places variable into RTC area which will be included into dump.
- `COREDUMP_RTC_FAST_ATTR` places variable into RTC_FAST area which will be included into dump.

Example

1. In *Project Configuration Menu*, enable *COREDUMP TO FLASH*, then save and exit.
2. In your project, create a global variable in DRAM area as such as:

```
// uint8_t global_var;
COREDUMP_DRAM_ATTR uint8_t global_var;
```

3. In main application, set the variable to any value and `assert(0)` to cause a crash.

```
global_var = 25;
assert(0);
```

4. Build, flash and run the application on a target device and wait for the dumping information.
5. Run the command below to start core dumping in GDB, where `PORT` is the device USB port:

```
espcoredump.py -p PORT dbg_corefile <path/to/elf>
```

6. In GDB shell, type `p global_var` to get the variable content:

```
(gdb) p global_var
$1 = 25 '\031'
```

4.11.7 Running `espcoredump.py`

Generic command syntax: `espcoredump.py [options] command [args]`

Script Options

–**chip {auto,esp32,esp32s2,esp32s3,esp32c3}** Target chip type. Default value is "auto"

--port PORT, -p PORT Serial port device. Either "chip" or "port" need to be specified to determine the port when you have multi-target connected at the same time.

--baud BAUD, -b BAUD Serial port baud rate used when flashing/reading

--gdb-timeout-sec GDB_TIMEOUT_SEC Overwrite the default internal delay for gdb responses

Commands **dbg_corefile** Starts GDB debugging session with specified corefile

info_corefile Print core dump info from file

Command Arguments

--debug DEBUG, -d DEBUG Log level (0..3)

--gdb GDB, -g GDB Path to gdb

--core CORE, -c CORE Path to core dump file (if skipped core dump will be read from flash)

–core-format {b64,elf,raw}, -t {b64,elf,raw} File specified with "-c" is an ELF ("elf"), raw (raw) or base64-encoded (b64) binary

--off OFF, -o OFF Offset of coredump partition in flash (type "make partition_table" to see).

--save-core SAVE_CORE, -s SAVE_CORE Save core to file. Otherwise temporary core file will be deleted. Does not work with "-c"

--rom-elf ROM_ELF, -r ROM_ELF Path to ROM ELF file. Will use "<target>_rom.elf" if not specified

--print-mem, -m Print memory dump. Only valid when info_corefile.

<prog> Path to program ELF file.

4.12 Event Handling

Several ESP-IDF components use *events* to inform application about state changes, such as connection or disconnection. This document gives an overview of these event mechanisms.

4.12.1 Wi-Fi, Ethernet, and IP Events

Before the introduction of *esp_event library*, events from Wi-Fi driver, Ethernet driver, and TCP/IP stack were dispatched using the so-called *legacy event loop*. The following sections explain each of the methods.

esp_event Library Event Loop

esp_event library is designed to supersede the legacy event loop for the purposes of event handling in ESP-IDF. In the legacy event loop, all possible event types and event data structures had to be defined in `system_event_id_t` enumeration and `system_event_info_t` union, which made it impossible to send custom events to the event loop, and use the event loop for other kinds of events (e.g. Mesh). Legacy event loop also supported only one event handler function, therefore application components could not handle some of Wi-Fi or IP events themselves, and required application to forward these events from its event handler function.

See *esp_event library API reference* for general information on using this library. Wi-Fi, Ethernet, and IP events are sent to the *default event loop* provided by this library.

Legacy Event Loop

This event loop implementation is started using `esp_event_loop_init()` function. Application typically supplies an *event handler*, a function with the following signature:

```
esp_err_t event_handler(void *ctx, system_event_t *event)
{
}
```

Both the pointer to event handler function, and an arbitrary context pointer are passed to `esp_event_loop_init()`.

When Wi-Fi, Ethernet, or IP stack generate an event, this event is sent to a high-priority `event` task via a queue. Application-provided event handler function is called in the context of this task. Event task stack size and event queue size can be adjusted using *CONFIG_ESP_SYSTEM_EVENT_TASK_STACK_SIZE* and *CONFIG_ESP_SYSTEM_EVENT_QUEUE_SIZE* options, respectively.

Event handler receives a pointer to the event structure (*system_event_t*) which describes current event. This structure follows a *tagged union* pattern: `event_id` member indicates the type of event, and `event_info` member is a union of description structures. Application event handler will typically use `switch(event->event_id)` to handle different kinds of events.

If application event handler needs to relay the event to some other task, it is important to note that event pointer passed to the event handler is a pointer to temporary structure. To pass the event to another task, application has to make a copy of the entire structure.

Event IDs and Corresponding Data Structures

Event ID (legacy event ID)	Event data structure
Wi-Fi	
WIFI_EVENT_WIFI_READY (SYSTEM_EVENT_WIFI_READY)	n/a
WIFI_EVENT_SCAN_DONE (SYSTEM_EVENT_SCAN_DONE)	*wifi_event_sta_scan_done_t*
WIFI_EVENT_STA_START (SYSTEM_EVENT_STA_START)	n/a
WIFI_EVENT_STA_STOP (SYSTEM_EVENT_STA_STOP)	n/a
WIFI_EVENT_STA_CONNECTED (SYSTEM_EVENT_STA_CONNECTED)	*wifi_event_sta_connected_t*
WIFI_EVENT_STA_DISCONNECTED (SYSTEM_EVENT_STA_DISCONNECTED)	*wifi_event_sta_disconnected_t*
WIFI_EVENT_STA_AUTHMODE_CHANGE (SYSTEM_EVENT_STA_AUTHMODE_CHANGE)	*wifi_event_sta_authmode_change_t*
WIFI_EVENT_STA_WPS_ER_SUCCESS (SYSTEM_EVENT_STA_WPS_ER_SUCCESS)	n/a
WIFI_EVENT_STA_WPS_ER_FAILED (SYSTEM_EVENT_STA_WPS_ER_FAILED)	*wifi_event_sta_wps_fail_reason_t*
WIFI_EVENT_STA_WPS_ER_TIMEOUT (SYSTEM_EVENT_STA_WPS_ER_TIMEOUT)	n/a
WIFI_EVENT_STA_WPS_ER_PIN (SYSTEM_EVENT_STA_WPS_ER_PIN)	*wifi_event_sta_wps_er_pin_t*
WIFI_EVENT_AP_START (SYSTEM_EVENT_AP_START)	n/a
WIFI_EVENT_AP_STOP (SYSTEM_EVENT_AP_STOP)	n/a
WIFI_EVENT_AP_STACONNECTED (SYSTEM_EVENT_AP_STACONNECTED)	*wifi_event_ap_staconnected_t*
WIFI_EVENT_AP_STADISCONNECTED (SYSTEM_EVENT_AP_STADISCONNECTED)	*wifi_event_ap_stadisconnected_t*
WIFI_EVENT_AP_PROBEREQRECVED (SYSTEM_EVENT_AP_PROBEREQRECVED)	*wifi_event_ap_probe_req_rx_t*
Ethernet	
ETHERNET_EVENT_START (SYSTEM_EVENT_ETH_START)	n/a
ETHERNET_EVENT_STOP (SYSTEM_EVENT_ETH_STOP)	n/a
ETHERNET_EVENT_CONNECTED (SYSTEM_EVENT_ETH_CONNECTED)	n/a
ETHERNET_EVENT_DISCONNECTED (SYSTEM_EVENT_ETH_DISCONNECTED)	n/a
IP	
IP_EVENT_STA_GOT_IP (SYSTEM_EVENT_STA_GOT_IP)	`ip_event_got_ip_t`
IP_EVENT_STA_LOST_IP (SYSTEM_EVENT_STA_LOST_IP)	n/a
IP_EVENT_AP_STAIPASSIGNED (SYSTEM_EVENT_AP_STAIPASSIGNED)	n/a
IP_EVENT_GOT_IP6 (SYSTEM_EVENT_GOT_IP6)	`ip_event_got_ip6_t`
IP_EVENT_ETH_GOT_IP (SYSTEM_EVENT_ETH_GOT_IP)	`ip_event_got_ip_t`
IP_EVENT_ETH_LOST_IP (SYSTEM_EVENT_ETH_LOST_IP)	n/a

4.12.2 Mesh Events

ESP-WIFI-MESH uses a system similar to the *Legacy Event Loop* to deliver events to the application. See *System Events* for details.

4.12.3 Bluetooth Events

Various modules of the Bluetooth stack deliver events to applications via dedicated callback functions. Callback functions receive the event type (enumerated value) and event data (union of structures for each event type). The following list gives the registration API name, event enumeration type, and event parameters type.

- BLE GAP: *esp_ble_gap_register_callback()*, *esp_gap_ble_cb_event_t*, *esp_ble_gap_cb_param_t*.
- BT GAP: *esp_bt_gap_register_callback()*, *esp_bt_gap_cb_event_t*, *esp_bt_gap_cb_param_t*.
- GATTC: *esp_ble_gattc_register_callback()*, esp_bt_gattc_cb_event_t, esp_bt_gattc_cb_param_t.
- GATTS: *esp_ble_gatts_register_callback()*, esp_bt_gatts_cb_event_t, esp_bt_gatts_cb_param_t.
- SPP: *esp_spp_register_callback()*, *esp_spp_cb_event_t*, *esp_spp_cb_param_t*.
- Blufi: *esp_blufi_register_callbacks()*, *esp_blufi_cb_event_t*, *esp_blufi_cb_param_t*.
- A2DP: *esp_a2d_register_callback()*, *esp_a2d_cb_event_t*, *esp_a2d_cb_param_t*.
- AVRC: *esp_avrc_ct_register_callback()*, *esp_avrc_ct_cb_event_t*, *esp_avrc_ct_cb_param_t*.
- HFP Client: *esp_hf_client_register_callback()*, *esp_hf_client_cb_event_t*, *esp_hf_client_cb_param_t*.
- HFP AG: esp_hf_ag_register_callback(), esp_hf_ag_cb_event_t, esp_hf_ag_cb_param_t.

4.13 Support for external RAM

4.13.1 Introduction

ESP32 has a few hundred kilobytes of internal RAM, residing on the same die as the rest of the chip components. It can be insufficient for some purposes, so ESP32 has the ability to also use up to 4 MB of external SPI RAM memory. The external memory is incorporated in the memory map and, with certain restrictions, is usable in the same way as internal data RAM.

4.13.2 Hardware

ESP32 supports SPI PSRAM connected in parallel with the SPI flash chip. While ESP32 is capable of supporting several types of RAM chips, ESP-IDF currently only supports Espressif branded PSRAM chips (ESP-PSRAM32, ESP-PSRAM64, etc).

Note: Some PSRAM chips are 1.8 V devices and some are 3.3 V. The working voltage of the PSRAM chip must match the working voltage of the flash component. Consult the datasheet for your PSRAM chip and ESP32 device to find out the working voltages. For a 1.8 V PSRAM chip, make sure to either set the MTDI pin to a high signal level on bootup, or program ESP32 eFuses to always use the VDD_SIO level of 1.8 V. Not doing this can damage the PSRAM and/or flash chip.

Note: Espressif produces both modules and system-in-package chips that integrate compatible PSRAM and flash and are ready to mount on a product PCB. Consult the Espressif website for more information.

For specific details about connecting the SoC or module pins to an external PSRAM chip, consult the SoC or module datasheet.

4.13.3 Configuring External RAM

ESP-IDF fully supports the use of external memory in applications. Once the external RAM is initialized at startup, ESP-IDF can be configured to handle it in several ways:

- *Integrate RAM into the ESP32 memory map*
- *Add external RAM to the capability allocator*
- *Provide external RAM via malloc()* (default)
- *Allow .bss segment placed in external memory*
- *Allow .noinit segment placed in external memory*

Integrate RAM into the ESP32 memory map

Select this option by choosing "Integrate RAM into memory map" from *CONFIG_SPIRAM_USE*.

This is the most basic option for external SPI RAM integration. Most likely, you will need another, more advanced option.

During the ESP-IDF startup, external RAM is mapped into the data address space, starting at address 0x3F800000 (byte-accessible). The length of this region is the same as the SPI RAM size (up to the limit of 4 MB).

Applications can manually place data in external memory by creating pointers to this region. So if an application uses external memory, it is responsible for all management of the external SPI RAM: coordinating buffer usage, preventing corruption, etc.

Add external RAM to the capability allocator

Select this option by choosing "Make RAM allocatable using heap_caps_malloc(…, MALLOC_CAP_SPIRAM)" from *CONFIG_SPIRAM_USE*.

When enabled, memory is mapped to address 0x3F800000 and also added to the *capabilities-based heap memory allocator* using `MALLOC_CAP_SPIRAM`.

To allocate memory from external RAM, a program should call `heap_caps_malloc(size, MALLOC_CAP_SPIRAM)`. After use, this memory can be freed by calling the normal `free()` function.

Provide external RAM via malloc()

Select this option by choosing "Make RAM allocatable using malloc() as well" from *CONFIG_SPIRAM_USE*. This is the default option.

In this case, memory is added to the capability allocator as described for the previous option. However, it is also added to the pool of RAM that can be returned by the standard `malloc()` function.

This allows any application to use the external RAM without having to rewrite the code to use `heap_caps_malloc(..., MALLOC_CAP_SPIRAM)`.

An additional configuration item, *CONFIG_SPIRAM_MALLOC_ALWAYSINTERNAL*, can be used to set the size threshold when a single allocation should prefer external memory:

- When allocating a size less than the threshold, the allocator will try internal memory first.

- When allocating a size equal to or larger than the threshold, the allocator will try external memory first.

If a suitable block of preferred internal/external memory is not available, the allocator will try the other type of memory.

Because some buffers can only be allocated in internal memory, a second configuration item *CONFIG_SPIRAM_MALLOC_RESERVE_INTERNAL* defines a pool of internal memory which is reserved for *only* explicitly internal allocations (such as memory for DMA use). Regular `malloc()` will not allocate from this pool. The *MALLOC_CAP_DMA* and `MALLOC_CAP_INTERNAL` flags can be used to allocate memory from this pool.

Allow .bss segment placed in external memory

Enable this option by checking *CONFIG_SPIRAM_ALLOW_BSS_SEG_EXTERNAL_MEMORY*. This configuration setting is independent of the other three.

If enabled, a region of the address space starting from 0x3F800000 will be used to store zero-initialized data (BSS segment) from the lwIP, net80211, libpp, and bluedroid ESP-IDF libraries.

Additional data can be moved from the internal BSS segment to external RAM by applying the macro `EXT_RAM_ATTR` to any static declaration (which is not initialized to a non-zero value).

It is also possible to place the BSS section of a component or a library to external RAM using linker fragment scheme `extram_bss`.

This option reduces the internal static memory used by the BSS segment.

Remaining external RAM can also be added to the capability heap allocator using the method shown above.

Allow .noinit segment placed in external memory

Enable this option by checking *CONFIG_SPIRAM_ALLOW_NOINIT_SEG_EXTERNAL_MEMORY*. If enabled, a region of the address space provided in external RAM will be used to store non-initialized data. The values placed in this segment will not be initialized or modified even during startup or restart.

By applying the macro `EXT_RAM_NOINIT_ATTR`, data could be moved from the internal NOINIT segment to external RAM. Remaining external RAM can still be added to the capability heap allocator using the method shown above, *Add external RAM to the capability allocator*.

4.13.4 Restrictions

External RAM use has the following restrictions:

- When flash cache is disabled (for example, if the flash is being written to), the external RAM also becomes inaccessible; any reads from or writes to it will lead to an illegal cache access exception. This is also the reason why ESP-IDF does not by default allocate any task stacks in external RAM (see below).
- External RAM cannot be used as a place to store DMA transaction descriptors or as a buffer for a DMA transfer to read from or write into. Therefore when External RAM is enabled, any buffers that will be used in combination with DMA must be allocated using `heap_caps_malloc(size, MALLOC_CAP_DMA | MALLOC_CAP_INTERNAL)` and can be freed using a standard `free()` call.
- External RAM uses the same cache region as the external flash. This means that frequently accessed variables in external RAM can be read and modified almost as quickly as in internal ram. However, when accessing large chunks of data (>32 KB), the cache can be insufficient, and speeds will fall back to the access speed of the external RAM. Moreover, accessing large chunks of data can "push out" cached flash, possibly making the execution of code slower afterwards.
- In general, external RAM will not be used as task stack memory. *`xTaskCreate()`* and similar functions will always allocate internal memory for stack and task TCBs.

The option *CONFIG_SPIRAM_ALLOW_STACK_EXTERNAL_MEMORY* can be used to place task stacks into external memory. In these cases `xTaskCreateStatic()` must be used to specify a task stack buffer allocated from external memory, otherwise task stacks will still be allocated from internal memory.

4.13.5 Failure to initialize

By default, failure to initialize external RAM will cause the ESP-IDF startup to abort. This can be disabled by enabling the config item *CONFIG_SPIRAM_IGNORE_NOTFOUND*.

If *CONFIG_SPIRAM_ALLOW_BSS_SEG_EXTERNAL_MEMORY* is enabled, the option to ignore failure is not available as the linker will have assigned symbols to external memory addresses at link time.

- Regarding stacks in PSRAM: For tasks not calling on code in ROM in any way, directly or indirectly, the menuconfig option *CONFIG_SPIRAM_ALLOW_STACK_EXTERNAL_MEMORY* will eliminate the check in xTaskCreateStatic, allowing a task's stack to be in external RAM. Using this is not advised, however.
- When used at 80 MHz clock speed, external RAM must also occupy either the HSPI or VSPI bus. Select which SPI host will be used by *CONFIG_SPIRAM_OCCUPY_SPI_HOST*.

4.13.6 Chip revisions

There are some issues with certain revisions of ESP32 that have repercussions for use with external RAM. The issues are documented in the ESP32 ECO document. In particular, ESP-IDF handles the bugs mentioned in the following ways:

ESP32 rev v0

ESP-IDF has no workaround for the bugs in this revision of silicon, and it cannot be used to map external PSRAM into ESP32's main memory map.

ESP32 rev v1

The bugs in this revision of silicon cause issues if certain sequences of machine instructions operate on external memory. (ESP32 ECO 3.2). As a workaround, the GCC compiler received the flag `-mfix-esp32-psram-cache-issue` to filter these sequences and only output the code that can safely be executed. Enable this flag by checking *CONFIG_SPIRAM_CACHE_WORKAROUND*.

Aside from linking to a recompiled version of Newlib with the additional flag, ESP-IDF also does the following:

- Avoids using some ROM functions
- Allocates static memory for the WiFi stack

ESP32 rev v3

ESP32 revision 3 ("ECO V3") fixes the PSRAM cache issue found in rev. 1. When *CONFIG_ESP32_REV_MIN* option is set to rev. 3, compiler workarounds related to PSRAM will be disabled. For more information about ESP32 ECO V3, see ESP32 ECO V3 User Guide.

4.14 Fatal Errors

4.14.1 Overview

In certain situations, execution of the program can not be continued in a well defined way. In ESP-IDF, these situations include:

- CPU Exceptions: Illegal Instruction, Load/Store Alignment Error, Load/Store Prohibited error, Double Exception.
- System level checks and safeguards:
  - *Interrupt watchdog* timeout
  - *Task watchdog* timeout (only fatal if *CONFIG_ESP_TASK_WDT_PANIC* is set)
  - Cache access error
  - Brownout detection event
  - Stack overflow
  - Stack smashing protection check
  - Heap integrity check
  - Undefined behavior sanitizer (UBSAN) checks
- Failed assertions, via `assert`, `configASSERT` and similar macros.

This guide explains the procedure used in ESP-IDF for handling these errors, and provides suggestions on troubleshooting the errors.

4.14.2 Panic Handler

Every error cause listed in the *Overview* will be handled by the *panic handler*.

The panic handler will start by printing the cause of the error to the console. For CPU exceptions, the message will be similar to

```
Guru Meditation Error: Core 0 panic'ed (IllegalInstruction). Exception was␣
↪unhandled.
```

For some of the system level checks (interrupt watchdog, cache access error), the message will be similar to

```
Guru Meditation Error: Core 0 panic'ed (Cache disabled but cached memory␣
↪region accessed). Exception was unhandled.
```

In all cases, the error cause will be printed in parentheses. See *Guru Meditation Errors* for a list of possible error causes.

Subsequent behavior of the panic handler can be set using *CONFIG_ESP_SYSTEM_PANIC* configuration choice. The available options are:

- Print registers and reboot (`CONFIG_ESP_SYSTEM_PANIC_PRINT_REBOOT`) —default option.
  This will print register values at the point of the exception, print the backtrace, and restart the chip.
- Print registers and halt (`CONFIG_ESP_SYSTEM_PANIC_PRINT_HALT`)
  Similar to the above option, but halt instead of rebooting. External reset is required to restart the program.
- Silent reboot (`CONFIG_ESP_SYSTEM_PANIC_SILENT_REBOOT`)
  Don’ t print registers or backtrace, restart the chip immediately.
- Invoke GDB Stub (`CONFIG_ESP_SYSTEM_PANIC_GDBSTUB`)
  Start GDB server which can communicate with GDB over console UART port. This option will only provide read-only debugging or post-mortem debugging. See *GDB Stub* for more details.
- Invoke dynamic GDB Stub (`ESP_SYSTEM_GDBSTUB_RUNTIME`)
  Start GDB server which can communicate with GDB over console UART port. This option allows the user to debug a program at run time and set break points, alter the execution, etc. See *GDB Stub* for more details.

The behavior of the panic handler is affected by two other configuration options.

- If *CONFIG_ESP32_DEBUG_OCDAWARE* is enabled (which is the default), the panic handler will detect whether a JTAG debugger is connected. If it is, execution will be halted and control will be passed to the debugger. In this case, registers and backtrace are not dumped to the console, and GDBStub / Core Dump functions are not used.

- If the *Core Dump* feature is enabled, then the system state (task stacks and registers) will be dumped to either Flash or UART, for later analysis.
- If *CONFIG_ESP_PANIC_HANDLER_IRAM* is disabled (disabled by default), the panic handler code is placed in flash memory, not IRAM. This means that if ESP-IDF crashes while flash cache is disabled, the panic handler will automatically re-enable flash cache before running GDB Stub or Core Dump. This adds some minor risk, if the flash cache status is also corrupted during the crash.
  If this option is enabled, the panic handler code (including required UART functions) is placed in IRAM, and hence will decrease the usable memory space in SRAM. But this may be necessary to debug some complex issues with crashes while flash cache is disabled (for example, when writing to SPI flash) or when flash cache is corrupted when an exception is triggered.

The following diagram illustrates the panic handler behavior:

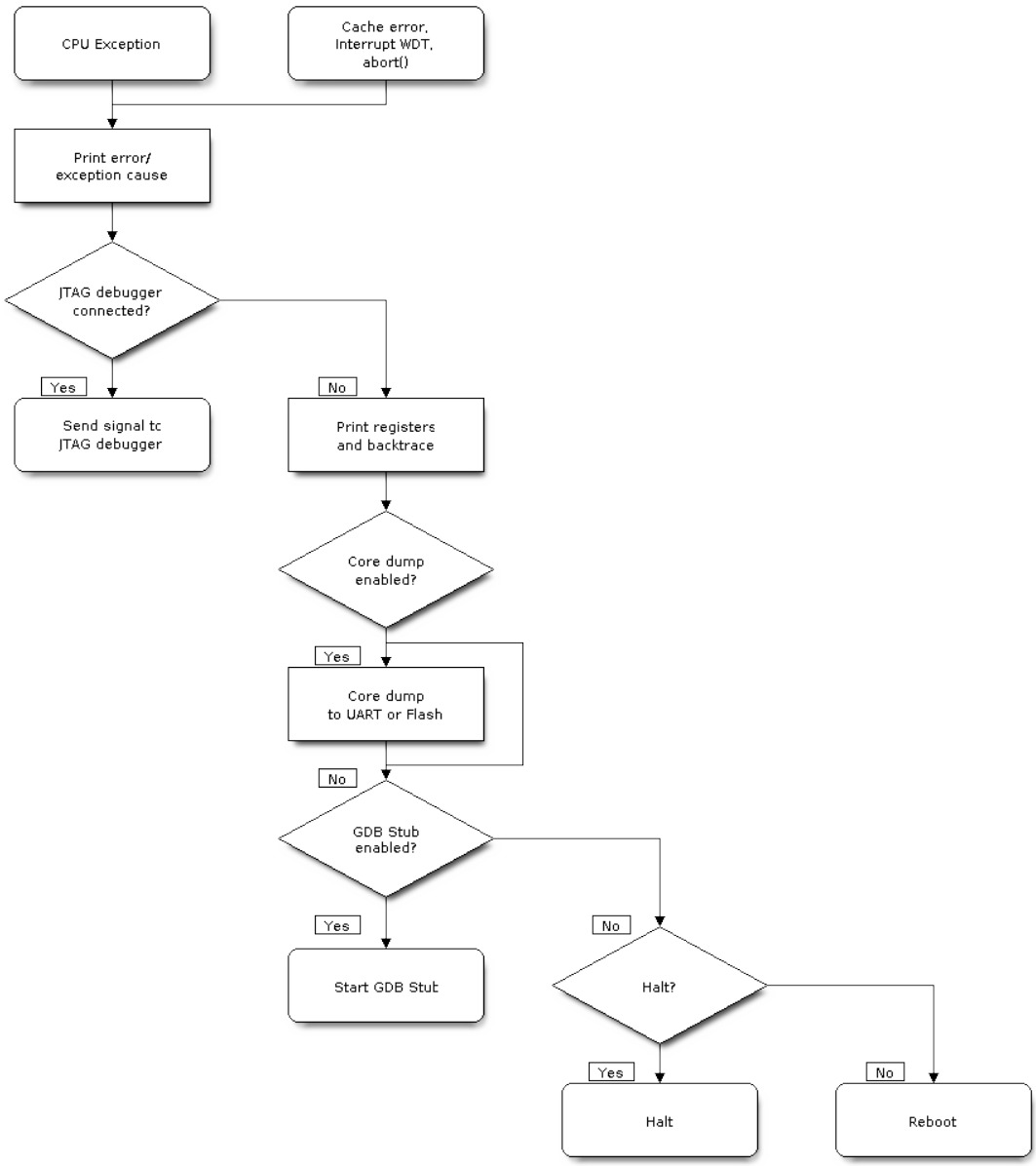

Fig. 32: Panic Handler Flowchart (click to enlarge)

4.14.3 Register Dump and Backtrace

Unless the `CONFIG_ESP_SYSTEM_PANIC_SILENT_REBOOT` option is enabled, the panic handler prints some of the CPU registers, and the backtrace, to the console

```
Core 0 register dump:
PC      : 0x400e14ed  PS      : 0x00060030  A0      : 0x800d0805  A1      :␣
↪0x3ffb5030
A2      : 0x00000000  A3      : 0x00000001  A4      : 0x00000001  A5      :␣
↪0x3ffb50dc
A6      : 0x00000000  A7      : 0x00000001  A8      : 0x00000000  A9      :␣
↪0x3ffb5000
A10     : 0x00000000  A11     : 0x3ffb2bac  A12     : 0x40082d1c  A13     :␣
↪0x06ff1ff8
A14     : 0x3ffb7078  A15     : 0x00000000  SAR     : 0x00000014  EXCCAUSE:␣
↪0x0000001d
EXCVADDR: 0x00000000  LBEG    : 0x4000c46c  LEND    : 0x4000c477  LCOUNT  :␣
↪0xffffffff

Backtrace: 0x400e14ed:0x3ffb5030 0x400d0802:0x3ffb5050
```

The register values printed are the register values in the exception frame, i.e., values at the moment when the CPU exception or another fatal error has occurred.

A Register dump is not printed if the panic handler has been executed as a result of an `abort()` call.

In some cases, such as interrupt watchdog timeout, the panic handler may print additional CPU registers (EPC1-EPC4) and the registers/backtrace of the code running on the other CPU.

The backtrace line contains PC:SP pairs, where PC is the Program Counter and SP is Stack Pointer, for each stack frame of the current task. If a fatal error happens inside an ISR, the backtrace may include PC:SP pairs both from the task which was interrupted, and from the ISR.

If *IDF Monitor* is used, Program Counter values will be converted to code locations (function name, file name, and line number), and the output will be annotated with additional lines:

```
Core 0 register dump:
PC      : 0x400e14ed  PS      : 0x00060030  A0      : 0x800d0805  A1      :␣
↪0x3ffb5030
0x400e14ed: app_main at /Users/user/esp/example/main/main.cpp:36

A2      : 0x00000000  A3      : 0x00000001  A4      : 0x00000001  A5      :␣
↪0x3ffb50dc
A6      : 0x00000000  A7      : 0x00000001  A8      : 0x00000000  A9      :␣
↪0x3ffb5000
A10     : 0x00000000  A11     : 0x3ffb2bac  A12     : 0x40082d1c  A13     :␣
↪0x06ff1ff8
0x40082d1c: _calloc_r at /Users/user/esp/esp-idf/components/newlib/syscalls.c:51

A14     : 0x3ffb7078  A15     : 0x00000000  SAR     : 0x00000014  EXCCAUSE:␣
↪0x0000001d
EXCVADDR: 0x00000000  LBEG    : 0x4000c46c  LEND    : 0x4000c477  LCOUNT  :␣
↪0xffffffff

Backtrace: 0x400e14ed:0x3ffb5030 0x400d0802:0x3ffb5050
0x400e14ed: app_main at /Users/user/esp/example/main/main.cpp:36

0x400d0802: main_task at /Users/user/esp/esp-idf/components/esp32/cpu_start.c:470
```

To find the location where a fatal error has happened, look at the lines which follow the "Backtrace" line. Fatal error location is the top line, and subsequent lines show the call stack.

4.14.4 GDB Stub

If the `CONFIG_ESP_SYSTEM_PANIC_GDBSTUB` option is enabled, the panic handler will not reset the chip when a fatal error happens. Instead, it will start a GDB remote protocol server, commonly referred to as GDB Stub. When this happens, a GDB instance running on the host computer can be instructed to connect to the ESP32 UART port.

If *IDF Monitor* is used, GDB is started automatically when a GDB Stub prompt is detected on the UART. The output looks like this:

```
Entering gdb stub now.
$T0b#e6GNU gdb (crosstool-NG crosstool-ng-1.22.0-80-gff1f415) 7.10
Copyright (C) 2015 Free Software Foundation, Inc.
License GPLv3+: GNU GPL version 3 or later <http://gnu.org/licenses/gpl.html>
This is free software: you are free to change and redistribute it.
There is NO WARRANTY, to the extent permitted by law.  Type "show copying"
and "show warranty" for details.
This GDB was configured as "--host=x86_64-build_apple-darwin16.3.0 --target=xtensa-
↪esp32-elf".
Type "show configuration" for configuration details.
For bug reporting instructions, please see:
<http://www.gnu.org/software/gdb/bugs/>.
Find the GDB manual and other documentation resources online at:
<http://www.gnu.org/software/gdb/documentation/>.
For help, type "help".
Type "apropos word" to search for commands related to "word"...
Reading symbols from /Users/user/esp/example/build/example.elf...done.
Remote debugging using /dev/cu.usbserial-31301
0x400e1b41 in app_main ()
    at /Users/user/esp/example/main/main.cpp:36
36      *((int*) 0) = 0;
(gdb)
```

The GDB prompt can be used to inspect CPU registers, local and static variables, and arbitrary locations in memory. It is not possible to set breakpoints, change the PC, or continue execution. To reset the program, exit GDB and perform an external reset: Ctrl-T Ctrl-R in IDF Monitor, or using the external reset button on the development board.

4.14.5 Guru Meditation Errors

This section explains the meaning of different error causes, printed in parens after the `Guru Meditation Error: Core panic'ed` message.

Note: See the Guru Meditation Wikipedia article for historical origins of "Guru Meditation".

IllegalInstruction

This CPU exception indicates that the instruction which was executed was not a valid instruction. Most common reasons for this error include:

- FreeRTOS task function has returned. In FreeRTOS, if a task function needs to terminate, it should call *`vTaskDelete()`* and delete itself, instead of returning.
- Failure to read next instruction from SPI flash. This usually happens if:
  - Application has reconfigured the SPI flash pins as some other function (GPIO, UART, etc.). Consult the Hardware Design Guidelines and the datasheet for the chip or module for details about the SPI flash pins.
  - Some external device has accidentally been connected to the SPI flash pins, and has interfered with communication between ESP32 and SPI flash.

InstrFetchProhibited

This CPU exception indicates that the CPU could not read an instruction because the address of the instruction does not belong to a valid region in instruction RAM or ROM.

Usually, this means an attempt to call a function pointer, which does not point to valid code. `PC` (Program Counter) register can be used as an indicator: it will be zero or will contain a garbage value (not `0x4xxxxxxx`).

LoadProhibited, StoreProhibited

These CPU exceptions happen when an application attempts to read from or write to an invalid memory location. The address which has been written/read is found in the `EXCVADDR` register in the register dump. If this address is zero, it usually means that the application has attempted to dereference a NULL pointer. If this address is close to zero, it usually means that the application has attempted to access a member of a structure, but the pointer to the structure is NULL. If this address is something else (garbage value, not in `0x3fxxxxxx` - `0x6xxxxxxx` range), it likely means that the pointer used to access the data is either not initialized or has been corrupted.

IntegerDivideByZero

Application has attempted to do an integer division by zero.

LoadStoreAlignment

Application has attempted to read or write a memory location, and the address alignment does not match the load/store size. For example, a 32-bit read can only be done from a 4-byte aligned address, and a 16-bit write can only be done to a 2-byte aligned address.

LoadStoreError

This exception may happen in the following cases:

- If the application has attempted to do an 8- or 16- bit read to, or write from, a memory region which only supports 32-bit reads/writes. For example, dereferencing a `char*` pointer to instruction memory (IRAM, IROM) will result in such an error.
- If the application has attempted to write to a read-only memory region, such as IROM or DROM.

Unhandled debug exception

This will usually be followed by a message like:

```
Debug exception reason: Stack canary watchpoint triggered (task_name)
```

This error indicates that the application has written past the end of the stack of the task with name `task_name`. Note that not every stack overflow is guaranteed to trigger this error. It is possible that the task writes to memory beyond the stack canary location, in which case the watchpoint will not be triggered.

Interrupt wdt timeout on CPU0 / CPU1

Indicates that an interrupt watchdog timeout has occurred. See *Watchdogs* for more information.

Cache disabled but cached memory region accessed

In some situations, ESP-IDF will temporarily disable access to external SPI Flash and SPI RAM via caches. For example, this happens when spi_flash APIs are used to read/write/erase/mmap regions of SPI Flash. In these situations, tasks are suspended, and interrupt handlers not registered with `ESP_INTR_FLAG_IRAM` are disabled. Make sure that any interrupt handlers registered with this flag have all the code and data in IRAM/DRAM. Refer to the *SPI flash API documentation* for more details.

4.14.6 Other Fatal Errors

Brownout

ESP32 has a built-in brownout detector, which is enabled by default. The brownout detector can trigger a system reset if the supply voltage goes below a safe level. The brownout detector can be configured using *CONFIG_ESP32_BROWNOUT_DET* and *CONFIG_ESP32_BROWNOUT_DET_LVL_SEL* options.

When the brownout detector triggers, the following message is printed:

```
Brownout detector was triggered
```

The chip is reset after the message is printed.

Note that if the supply voltage is dropping at a fast rate, only part of the message may be seen on the console.

Corrupt Heap

ESP-IDF's heap implementation contains a number of run-time checks of the heap structure. Additional checks ("Heap Poisoning") can be enabled in menuconfig. If one of the checks fails, a message similar to the following will be printed:

```
CORRUPT HEAP: Bad tail at 0x3ffe270a. Expected 0xbaad5678 got 0xbaac5678
assertion "head != NULL" failed: file "/Users/user/esp/esp-idf/components/heap/
↪multi_heap_poisoning.c", line 201, function: multi_heap_free
abort() was called at PC 0x400dca43 on core 0
```

Consult *Heap Memory Debugging* documentation for further information.

Stack Smashing

Stack smashing protection (based on GCC `-fstack-protector*` flags) can be enabled in ESP-IDF using *CONFIG_COMPILER_STACK_CHECK_MODE* option. If stack smashing is detected, message similar to the following will be printed:

```
Stack smashing protect failure!

abort() was called at PC 0x400d2138 on core 0

Backtrace: 0x4008e6c0:0x3ffc1780 0x4008e8b7:0x3ffc17a0 0x400d2138:0x3ffc17c0␣
↪0x400e79d5:0x3ffc17e0 0x400e79a7:0x3ffc1840 0x400e79df:0x3ffc18a0␣
↪0x400e2235:0x3ffc18c0 0x400e1916:0x3ffc18f0 0x400e19cd:0x3ffc1910␣
↪0x400e1a11:0x3ffc1930 0x400e1bb2:0x3ffc1950 0x400d2c44:0x3ffc1a80
0
```

The backtrace should point to the function where stack smashing has occurred. Check the function code for unbounded access to local arrays.

Undefined behavior sanitizer (UBSAN) checks

Undefined behavior sanitizer (UBSAN) is a compiler feature which adds run-time checks for potentially incorrect operations, such as:

- overflows (multiplication overflow, signed integer overflow)
- shift base or exponent errors (e.g. shift by more than 32 bits)
- integer conversion errors

See GCC documentation of `-fsanitize=undefined` option for the complete list of supported checks.

Enabling UBSAN UBSAN is disabled by default. It can be enabled at file, component, or project level by adding the `-fsanitize=undefined` compiler option in the build system.

When enabling UBSAN for code which uses the SoC hardware register header files (`soc/xxx_reg.h`), it is recommended to disable shift-base sanitizer using `-fno-sanitize=shift-base` option. This is due to the fact that ESP-IDF register header files currently contain patterns which cause false positives for this specific sanitizer option.

To enable UBSAN at project level, add the following code at the end of the project's `CMakeLists.txt` file:

```
idf_build_set_property(COMPILE_OPTIONS "-fsanitize=undefined" "-fno-sanitize=shift-
↪base" APPEND)
```

Alternatively, pass these options through the `EXTRA_CFLAGS` and `EXTRA_CXXFLAGS` environment variables.

Enabling UBSAN results in significant increase of code and data size. Most applications, except for the trivial ones, will not fit into the available RAM of the microcontroller when UBSAN is enabled for the whole application. Therefore it is recommended that UBSAN is instead enabled for specific components under test.

To enable UBSAN for a specific component (`component_name`) from the project's `CMakeLists.txt` file, add the following code at the end of the file:

```
idf_component_get_property(lib component_name COMPONENT_LIB)
target_compile_options(${lib} PRIVATE "-fsanitize=undefined" "-fno-sanitize=shift-
↪base")
```

Note: See the build system documentation for more information about *build properties* and *component properties*.

To enable UBSAN for a specific component (`component_name`) from `CMakeLists.txt` of the same component, add the following at the end of the file:

```
target_compile_options(${COMPONENT_LIB} PRIVATE "-fsanitize=undefined" "-fno-
↪sanitize=shift-base")
```

UBSAN output When UBSAN detects an error, a message and the backtrace are printed, for example:

```
Undefined behavior of type out_of_bounds

Backtrace:0x4008b383:0x3ffcd8b0 0x4008c791:0x3ffcd8d0 0x4008c587:0x3ffcd8f0␣
↪0x4008c6be:0x3ffcd950 0x400db74f:0x3ffcd970 0x400db99c:0x3ffcd9a0
```

When using *IDF Monitor*, the backtrace will be decoded to function names and source code locations, pointing to the location where the issue has happened (here it is `main.c:128`):

```
0x4008b383: panic_abort at /path/to/esp-idf/components/esp_system/panic.c:367

0x4008c791: esp_system_abort at /path/to/esp-idf/components/esp_system/system_api.
↪c:106
```

(continues on next page)

(continued from previous page)

```
0x4008c587: __ubsan_default_handler at /path/to/esp-idf/components/esp_system/
↪ubsan.c:152

0x4008c6be: __ubsan_handle_out_of_bounds at /path/to/esp-idf/components/esp_system/
↪ubsan.c:223

0x400db74f: test_ub at main.c:128

0x400db99c: app_main at main.c:56 (discriminator 1)
```

The types of errors reported by UBSAN can be as follows:

Name	Meaning
`type_mismatch`, `type_mismatch_v1`	Incorrect pointer value: null, unaligned, not compatible with the given type.
`add_overflow`, `sub_overflow`, `mul_overflow`, `negate_overflow`	Integer overflow during addition, subtraction, multiplication, negation.
`divrem_overflow`	Integer division by 0 or `INT_MIN`.
`shift_out_of_bounds`	Overflow in left or right shift operators.
`out_of_bounds`	Access outside of bounds of an array.
`unreachable`	Unreachable code executed.
`missing_return`	Non-void function has reached its end without returning a value (C++ only).
`vla_bound_not_positive`	Size of variable length array is not positive.
`load_invalid_value`	Value of `bool` or `enum` (C++ only) variable is invalid (out of bounds).
`nonnull_arg`	Null argument passed to a function which is declared with a `nonnull` attribute.
`nonnull_return`	Null value returned from a function which is declared with `returns_nonnull` attribute.
`builtin_unreachable`	`__builtin_unreachable` function called.
`pointer_overflow`	Overflow in pointer arithmetic.

4.15 Flash Encryption

This is a quick start guide to ESP32's flash encryption feature. Using an application code example, it demonstrates how to test and verify flash encryption operations during development and production.

4.15.1 Introduction

Flash encryption is intended for encrypting the contents of the ESP32's off-chip flash memory. Once this feature is enabled, firmware is flashed as plaintext, and then the data is encrypted in place on the first boot. As a result, physical readout of flash will not be sufficient to recover most flash contents.

With flash encryption enabled, the following types of data are encrypted by default:

- Firmware bootloader
- Partition Table
- All "app" type partitions

Other types of data can be encrypted conditionally:

- Any partition marked with the `encrypted` flag in the partition table. For details, see *Encrypted Partition Flag*.

- Secure Boot bootloader digest if Secure Boot is enabled (see below).

Secure Boot is a separate feature which can be used together with flash encryption to create an even more secure environment.

Important: For production use, flash encryption should be enabled in the "Release" mode only.

Important: Enabling flash encryption limits the options for further updates of ESP32. Before using this feature, read the document and make sure to understand the implications.

4.15.2 Relevant eFuses

The flash encryption operation is controlled by various eFuses available on ESP32. The list of eFuses and their descriptions is given in the table below. The names in eFuse column are also used by espefuse.py tool. For usage in the eFuse API, modify the name by adding `ESP_EFUSE_`, for example: esp_efuse_read_field_bit(ESP_EFUSE_DISABLE_DL_ENCRYPT).

Table 20: eFuses Used in Flash Encryption

eFuse	Description	Bit Depth
`CODING_SCHEME`	Controls actual number of block1 bits used to derive final 256-bit AES key. Possible values: `0` for 256 bits, `1` for 192 bits, `2` for 128 bits. Final AES key is derived based on the `FLASH_CRYPT_CONFIG` value.	2
`flash_encryption` (block1)	AES key storage.	256 bit key block
`FLASH_CRYPT_CONFIG`	Controls the AES encryption process.	4
`DISABLE_DL_ENCRYPT`	If set, disables flash encryption operation while running in Firmware Download mode.	1
`DISABLE_DL_DECRYPT`	If set, disables flash decryption while running in UART Firmware Download mode.	1
`FLASH_CRYPT_CNT`	Enables/disables encryption at boot time. If even number of bits set (0, 2, 4, 6) - encrypt flash at boot time. If odd number of bits set (1, 3, 5, 7) - do not encrypt flash at boot time.	7

Note:

- R/W access control is available for all the eFuse bits listed in the table above.
- The default value of these bits is 0 afer manufacturing.

Read and write access to eFuse bits is controlled by appropriate fields in the registers `WR_DIS` and `RD_DIS`. For more information on ESP32 eFuses, see *eFuse manager*. To change protection bits of eFuse field using espefuse.py, use these two commands: read_protect_efuse and write_protect_efuse. Example `espefuse.py write_protect_efuse DISABLE_DL_ENCRYPT`.

4.15.3 Flash Encryption Process

Assuming that the eFuse values are in their default states and the firmware bootloader is compiled to support flash encryption, the flash encryption process executes as shown below:

1. On the first power-on reset, all data in flash is un-encrypted (plaintext). The ROM bootloader loads the firmware bootloader.

2. Firmware bootloader reads the `FLASH_CRYPT_CNT` eFuse value (`0b0000000`). Since the value is `0` (even number of bits set), it configures and enables the flash encryption block. It also sets the `FLASH_CRYPT_CONFIG` eFuse to 0xF. For more information on the flash encryption block, see *ESP32 Technical Reference Manual > eFuse Controller (eFuse) > Flash Encryption Block* [PDF].
3. Firmware bootloader uses RNG (random) module to generate an AES-256 bit key and then writes it into the `flash_encryption` eFuse. The key cannot be accessed via software as the write and read protection bits for the `flash_encryption` eFuse are set. The flash encryption operations happen entirely by hardware, and the key cannot be accessed via software.
4. Flash encryption block encrypts the flash contents - the firmware bootloader, applications and partitions marked as `encrypted`. Encrypting in-place can take time, up to a minute for large partitions.
5. Firmware bootloader sets the first available bit in `FLASH_CRYPT_CNT` (0b0000001) to mark the flash contents as encrypted. Odd number of bits is set.
6. For *Development Mode*, the firmware bootloader sets only the eFuse bits `DISABLE_DL_DECRYPT` and `DISABLE_DL_CACHE` to allow the UART bootloader to re-flash encrypted binaries. Also, the `FLASH_CRYPT_CNT` eFuse bits are NOT write-protected.
7. For *Release Mode*, the firmware bootloader sets the eFuse bits `DISABLE_DL_ENCRYPT`, `DISABLE_DL_DECRYPT`, and `DISABLE_DL_CACHE` to 1 to prevent the UART bootloader from decrypting the flash contents. It also write-protects the `FLASH_CRYPT_CNT` eFuse bits. To modify this behavior, see *Enabling UART Bootloader Encryption/Decryption*.
8. The device is then rebooted to start executing the encrypted image. The firmware bootloader calls the flash decryption block to decrypt the flash contents and then loads the decrypted contents into IRAM.

During the development stage, there is a frequent need to program different plaintext flash images and test the flash encryption process. This requires that Firmware Download mode is able to load new plaintext images as many times as it might be needed. However, during manufacturing or production stages, Firmware Download mode should not be allowed to access flash contents for security reasons.

Hence, two different flash encryption configurations were created: for development and for production. For details on these configurations, see Section *Flash Encryption Configuration*.

4.15.4 Flash Encryption Configuration

The following flash encryption modes are available:

- *Development Mode* - recommended for use ONLY DURING DEVELOPMENT, as it does not prevent modification and readout of encrypted flash contents.
- *Release Mode* - recommended for manufacturing and production to prevent physical readout of encrypted flash contents.

This section provides information on the mentioned flash encryption modes and step by step instructions on how to use them.

Development Mode

During development, you can encrypt flash using either an ESP32 generated key or external host-generated key.

Using ESP32 Generated Key Development mode allows you to download multiple plaintext images using Firmware Download mode.

To test flash encryption process, take the following steps:

1. Ensure that you have an ESP32 device with default flash encryption eFuse settings as shown in *Relevant eFuses*.

   See how to check *ESP32 Flash Encryption Status*.

2. In *Project Configuration Menu*, do the following:

   - *Enable flash encryption on boot*
   - *Select encryption mode* (**Development mode** by default)

- *Select UART ROM download mode* (**enabled** by default. Note that for the esp32 target, the choice is only available when *CONFIG_ESP32_REV_MIN* level is set to 3 (ESP32 V3)).
- *Select the appropriate bootloader log verbosity*
- Save the configuration and exit.

Enabling flash encryption will increase the size of bootloader, which might require updating partition table offset. See *Bootloader Size*.

3. Run the command given below to build and flash the complete images.

```
idf.py flash monitor
```

Note: This command does not include any user files which should be written to the partitions on the flash memory. Please write them manually before running this command otherwise the files should be encrypted separately before writing.

This command will write to flash memory unencrypted images: the firmware bootloader, the partition table and applications. Once the flashing is complete, ESP32 will reset. On the next boot, the firmware bootloader encrypts: the firmware bootloader, application partitions and partitions marked as `encrypted` then resets. Encrypting in-place can take time, up to a minute for large partitions. After that, the application is decrypted at runtime and executed.

A sample output of the first ESP32 boot after enabling flash encryption is given below:

```
--- idf_monitor on /dev/cu.SLAB_USBtoUART 115200 ---
--- Quit: Ctrl+] | Menu: Ctrl+T | Help: Ctrl+T followed by Ctrl+H ---
ets Jun  8 2016 00:22:57

rst:0x1 (POWERON_RESET),boot:0x13 (SPI_FAST_FLASH_BOOT)
configsip: 0, SPIWP:0xee
clk_drv:0x00,q_drv:0x00,d_drv:0x00,cs0_drv:0x00,hd_drv:0x00,wp_drv:0x00
mode:DIO, clock div:2
load:0x3fff0018,len:4
load:0x3fff001c,len:8452
load:0x40078000,len:13608
load:0x40080400,len:6664
entry 0x40080764
I (28) boot: ESP-IDF v4.0-dev-850-gc4447462d-dirty 2nd stage bootloader
I (29) boot: compile time 15:37:14
I (30) boot: Enabling RNG early entropy source...
I (35) boot: SPI Speed      : 40MHz
I (39) boot: SPI Mode       : DIO
I (43) boot: SPI Flash Size : 4MB
I (47) boot: Partition Table:
I (51) boot: ## Label            Usage          Type ST Offset   Length
I (58) boot:  0 nvs              WiFi data        01 02 0000a000 00006000
I (66) boot:  1 phy_init         RF data          01 01 00010000 00001000
I (73) boot:  2 factory          factory app      00 00 00020000 00100000
I (81) boot: End of partition table
I (85) esp_image: segment 0: paddr=0x00020020 vaddr=0x3f400020 size=0x0808c (␣
↪32908) map
I (105) esp_image: segment 1: paddr=0x000280b4 vaddr=0x3ffb0000 size=0x01ea4 ( ␣
↪7844) load
I (109) esp_image: segment 2: paddr=0x00029f60 vaddr=0x40080000 size=0x00400 ( ␣
↪1024) load
0x40080000: _WindowOverflow4 at esp-idf/esp-idf/components/freertos/xtensa_vectors.
↪S:1778

I (114) esp_image: segment 3: paddr=0x0002a368 vaddr=0x40080400 size=0x05ca8 (␣
↪23720) load
I (132) esp_image: segment 4: paddr=0x00030018 vaddr=0x400d0018 size=0x126a8 (␣
↪75432) map
```

(continues on next page)

(continued from previous page)

```
0x400d0018: _flash_cache_start at ??:?

I (159) esp_image: segment 5: paddr=0x000426c8 vaddr=0x400860a8 size=0x01f4c ( ␣
↪8012) load
0x400860a8: prvAddNewTaskToReadyList at esp-idf/esp-idf/components/freertos/tasks.
↪c:4561

I (168) boot: Loaded app from partition at offset 0x20000
I (168) boot: Checking flash encryption...
I (168) flash_encrypt: Generating new flash encryption key...
I (187) flash_encrypt: Read & write protecting new key...
I (187) flash_encrypt: Setting CRYPT_CONFIG efuse to 0xF
W (188) flash_encrypt: Not disabling UART bootloader encryption
I (195) flash_encrypt: Disable UART bootloader decryption...
I (201) flash_encrypt: Disable UART bootloader MMU cache...
I (208) flash_encrypt: Disable JTAG...
I (212) flash_encrypt: Disable ROM BASIC interpreter fallback...
I (219) esp_image: segment 0: paddr=0x00001020 vaddr=0x3fff0018 size=0x00004 (    ␣
↪4)
I (227) esp_image: segment 1: paddr=0x0000102c vaddr=0x3fff001c size=0x02104 ( ␣
↪8452)
I (239) esp_image: segment 2: paddr=0x00003138 vaddr=0x40078000 size=0x03528 (␣
↪13608)
I (249) esp_image: segment 3: paddr=0x00006668 vaddr=0x40080400 size=0x01a08 ( ␣
↪6664)
I (657) esp_image: segment 0: paddr=0x00020020 vaddr=0x3f400020 size=0x0808c (␣
↪32908) map
I (669) esp_image: segment 1: paddr=0x000280b4 vaddr=0x3ffb0000 size=0x01ea4 ( ␣
↪7844)
I (672) esp_image: segment 2: paddr=0x00029f60 vaddr=0x40080000 size=0x00400 ( ␣
↪1024)
0x40080000: _WindowOverflow4 at esp-idf/esp-idf/components/freertos/xtensa_vectors.
↪S:1778

I (676) esp_image: segment 3: paddr=0x0002a368 vaddr=0x40080400 size=0x05ca8 (␣
↪23720)
I (692) esp_image: segment 4: paddr=0x00030018 vaddr=0x400d0018 size=0x126a8 (␣
↪75432) map
0x400d0018: _flash_cache_start at ??:?

I (719) esp_image: segment 5: paddr=0x000426c8 vaddr=0x400860a8 size=0x01f4c ( ␣
↪8012)
0x400860a8: prvAddNewTaskToReadyList at esp-idf/esp-idf/components/freertos/tasks.
↪c:4561

I (722) flash_encrypt: Encrypting partition 2 at offset 0x20000...
I (13229) flash_encrypt: Flash encryption completed
I (13229) boot: Resetting with flash encryption enabled...
```

A sample output of subsequent ESP32 boots just mentions that flash encryption is already enabled:

```
rst:0x1 (POWERON_RESET),boot:0x13 (SPI_FAST_FLASH_BOOT)
configsip: 0, SPIWP:0xee
clk_drv:0x00,q_drv:0x00,d_drv:0x00,cs0_drv:0x00,hd_drv:0x00,wp_drv:0x00
mode:DIO, clock div:2
load:0x3fff0018,len:4
load:0x3fff001c,len:8452
load:0x40078000,len:13652
ho 0 tail 12 room 4
load:0x40080400,len:6664
entry 0x40080764
```

(continues on next page)

(continued from previous page)

```
I (30) boot: ESP-IDF v4.0-dev-850-gc4447462d-dirty 2nd stage bootloader
I (30) boot: compile time 16:32:53
I (31) boot: Enabling RNG early entropy source...
I (37) boot: SPI Speed      : 40MHz
I (41) boot: SPI Mode       : DIO
I (45) boot: SPI Flash Size : 4MB
I (49) boot: Partition Table:
I (52) boot: ## Label            Usage          Type ST Offset   Length
I (60) boot:  0 nvs              WiFi data        01 02 0000a000 00006000
I (67) boot:  1 phy_init         RF data          01 01 00010000 00001000
I (75) boot:  2 factory          factory app      00 00 00020000 00100000
I (82) boot: End of partition table
I (86) esp_image: segment 0: paddr=0x00020020 vaddr=0x3f400020 size=0x0808c (␣
↪32908) map
I (107) esp_image: segment 1: paddr=0x000280b4 vaddr=0x3ffb0000 size=0x01ea4 ( ␣
↪7844) load
I (111) esp_image: segment 2: paddr=0x00029f60 vaddr=0x40080000 size=0x00400 ( ␣
↪1024) load
0x40080000: _WindowOverflow4 at esp-idf/esp-idf/components/freertos/xtensa_vectors.
↪S:1778

I (116) esp_image: segment 3: paddr=0x0002a368 vaddr=0x40080400 size=0x05ca8 (␣
↪23720) load
I (134) esp_image: segment 4: paddr=0x00030018 vaddr=0x400d0018 size=0x126a8 (␣
↪75432) map
0x400d0018: _flash_cache_start at ??:?

I (162) esp_image: segment 5: paddr=0x000426c8 vaddr=0x400860a8 size=0x01f4c ( ␣
↪8012) load
0x400860a8: prvAddNewTaskToReadyList at esp-idf/esp-idf/components/freertos/tasks.
↪c:4561

I (171) boot: Loaded app from partition at offset 0x20000
I (171) boot: Checking flash encryption...
I (171) flash_encrypt: flash encryption is enabled (3 plaintext flashes left)
I (178) boot: Disabling RNG early entropy source...
I (184) cpu_start: Pro cpu up.
I (188) cpu_start: Application information:
I (193) cpu_start: Project name:     flash-encryption
I (198) cpu_start: App version:      v4.0-dev-850-gc4447462d-dirty
I (205) cpu_start: Compile time:     Jun 17 2019 16:32:52
I (211) cpu_start: ELF file SHA256:  8770c886bdf561a7...
I (217) cpu_start: ESP-IDF:          v4.0-dev-850-gc4447462d-dirty
I (224) cpu_start: Starting app cpu, entry point is 0x40080e4c
0x40080e4c: call_start_cpu1 at esp-idf/esp-idf/components/esp32/cpu_start.c:265

I (0) cpu_start: App cpu up.
I (235) heap_init: Initializing. RAM available for dynamic allocation:
I (241) heap_init: At 3FFAE6E0 len 00001920 (6 KiB): DRAM
I (247) heap_init: At 3FFB2EC8 len 0002D138 (180 KiB): DRAM
I (254) heap_init: At 3FFE0440 len 00003AE0 (14 KiB): D/IRAM
I (260) heap_init: At 3FFE4350 len 0001BCB0 (111 KiB): D/IRAM
I (266) heap_init: At 40087FF4 len 0001800C (96 KiB): IRAM
I (273) cpu_start: Pro cpu start user code
I (291) cpu_start: Starting scheduler on PRO CPU.
I (0) cpu_start: Starting scheduler on APP CPU.

Sample program to check Flash Encryption
This is ESP32 chip with 2 CPU cores, WiFi/BT/BLE, silicon revision 1, 4MB external␣
↪flash
Flash encryption feature is enabled
```

(continues on next page)

(continued from previous page)

```
Flash encryption mode is DEVELOPMENT
Flash in encrypted mode with flash_crypt_cnt = 1
Halting...
```

At this stage, if you need to update and re-flash binaries, see *Re-flashing Updated Partitions*.

Using Host Generated Key It is possible to pre-generate a flash encryption key on the host computer and burn it into the eFuse. This allows you to pre-encrypt data on the host and flash already encrypted data without needing a plaintext flash update. This feature can be used in both *Development Mode* and *Release Mode*. Without a pre-generated key, data is flashed in plaintext and then ESP32 encrypts the data in-place.

Note: This option is not recommended for production, unless a separate key is generated for each individual device.

To use a host generated key, take the following steps:

1. Ensure that you have an ESP32 device with default flash encryption eFuse settings as shown in *Relevant eFuses*.

   See how to check *ESP32 Flash Encryption Status*.

2. Generate a random key by running:

   ```
   espsecure.py generate_flash_encryption_key my_flash_encryption_key.bin
   ```

3. **Before the first encrypted boot**, burn the key into your device' s eFuse using the command below. This action can be done **only once**.

   ```
   espefuse.py --port PORT burn_key flash_encryption my_flash_encryption_key.
   ↪bin
   ```

   If the key is not burned and the device is started after enabling flash encryption, the ESP32 will generate a random key that software cannot access or modify.

4. In *Project Configuration Menu*, do the following:
   - *Enable flash encryption on boot*
   - *Select encryption mode* (**Development mode** by default)
   - *Select the appropriate bootloader log verbosity*
   - Save the configuration and exit.

Enabling flash encryption will increase the size of bootloader, which might require updating partition table offset. See *Bootloader Size*.

5. Run the command given below to build and flash the complete images.

   ```
   idf.py flash monitor
   ```

   Note: This command does not include any user files which should be written to the partitions on the flash memory. Please write them manually before running this command otherwise the files should be encrypted separately before writing.

   This command will write to flash memory unencrypted images: the firmware bootloader, the partition table and applications. Once the flashing is complete, ESP32 will reset. On the next boot, the firmware bootloader encrypts: the firmware bootloader, application partitions and partitions marked as `encrypted` then resets. Encrypting in-place can take time, up to a minute for large partitions. After that, the application is decrypted at runtime and executed.

If using Development Mode, then the easiest way to update and re-flash binaries is *Re-flashing Updated Partitions*.

If using Release Mode, then it is possible to pre-encrypt the binaries on the host and then flash them as ciphertext. See *Manually Encrypting Files*.

Re-flashing Updated Partitions If you update your application code (done in plaintext) and want to re-flash it, you will need to encrypt it before flashing. To encrypt the application and flash it in one step, run:

```
idf.py encrypted-app-flash monitor
```

If all partitions needs to be updated in encrypted format, run:

```
idf.py encrypted-flash monitor
```

Release Mode

In Release mode, UART bootloader cannot perform flash encryption operations. New plaintext images can ONLY be downloaded using the over-the-air (OTA) scheme which will encrypt the plaintext image before writing to flash.

To use this mode, take the following steps:

1. Ensure that you have an ESP32 device with default flash encryption eFuse settings as shown in *Relevant eFuses*.

   See how to check *ESP32 Flash Encryption Status*.

2. In *Project Configuration Menu*, do the following:

   - *Enable flash encryption on boot*
   - *Select Release mode* (Note that once Release mode is selected, the `DISABLE_DL_ENCRYPT` and `DISABLE_DL_DECRYPT` eFuse bits will be burned to disable flash encryption hardware in ROM Download Mode.)
   - *Select UART ROM download mode (Permanently disabled (recommended))* (Note that this option is only available when *CONFIG_ESP32_REV_MIN* is set to 3 (ESP32 V3).) The default choice is to keep UART ROM download mode enabled, however it' s recommended to permanently disable this mode to reduce the options available to an attacker.
   - *Select the appropriate bootloader log verbosity*
   - Save the configuration and exit.

Enabling flash encryption will increase the size of bootloader, which might require updating partition table offset. See *Bootloader Size*.

3. Run the command given below to build and flash the complete images.

   ```
   idf.py flash monitor
   ```

   Note: This command does not include any user files which should be written to the partitions on the flash memory. Please write them manually before running this command otherwise the files should be encrypted separately before writing.

   This command will write to flash memory unencrypted images: the firmware bootloader, the partition table and applications. Once the flashing is complete, ESP32 will reset. On the next boot, the firmware bootloader encrypts: the firmware bootloader, application partitions and partitions marked as `encrypted` then resets. Encrypting in-place can take time, up to a minute for large partitions. After that, the application is decrypted at runtime and executed.

Once the flash encryption is enabled in Release mode, the bootloader will write-protect the `FLASH_CRYPT_CNT` eFuse.

For subsequent plaintext field updates, use *OTA scheme*.

Note: If you have pre-generated the flash encryption key and stored a copy, and the UART download mode is not permanently disabled via *CONFIG_SECURE_UART_ROM_DL_MODE* (ESP32 V3 only), then it is possible to update the flash locally by pre-encrypting the files and then flashing the ciphertext. See *Manually Encrypting Files*.

Best Practices

When using Flash Encryption in production:

- Do not reuse the same flash encryption key between multiple devices. This means that an attacker who copies encrypted data from one device cannot transfer it to a second device.
- When using ESP32 V3, if the UART ROM Download Mode is not needed for a production device then it should be disabled to provide an extra level of protection. Do this by calling *esp_efuse_disable_rom_download_mode()* during application startup. Alternatively, configure the project *CONFIG_ESP32_REV_MIN* level to 3 (targeting ESP32 V3 only) and select the *CONFIG_SECURE_UART_ROM_DL_MODE* to "Permanently disable ROM Download Mode (recommended)". The ability to disable ROM Download Mode is not available on earlier ESP32 versions.
- Enable *Secure Boot* as an extra layer of protection, and to prevent an attacker from selectively corrupting any part of the flash before boot.

4.15.5 Possible Failures

Once flash encryption is enabled, the `FLASH_CRYPT_CNT` eFuse value will have an odd number of bits set. It means that all the partitions marked with the encryption flag are expected to contain encrypted ciphertext. Below are the three typical failure cases if the ESP32 is erroneously loaded with plaintext data:

1. If the bootloader partition is re-flashed with a **plaintext firmware bootloader image**, the ROM bootloader will fail to load the firmware bootloader resulting in the following failure:

```
rst:0x3 (SW_RESET),boot:0x13 (SPI_FAST_FLASH_BOOT)
flash read err, 1000
ets_main.c 371
ets Jun  8 2016 00:22:57

rst:0x7 (TG0WDT_SYS_RESET),boot:0x13 (SPI_FAST_FLASH_BOOT)
flash read err, 1000
ets_main.c 371
ets Jun  8 2016 00:22:57

rst:0x7 (TG0WDT_SYS_RESET),boot:0x13 (SPI_FAST_FLASH_BOOT)
flash read err, 1000
ets_main.c 371
ets Jun  8 2016 00:22:57

rst:0x7 (TG0WDT_SYS_RESET),boot:0x13 (SPI_FAST_FLASH_BOOT)
flash read err, 1000
ets_main.c 371
ets Jun  8 2016 00:22:57

rst:0x7 (TG0WDT_SYS_RESET),boot:0x13 (SPI_FAST_FLASH_BOOT)
flash read err, 1000
ets_main.c 371
ets Jun  8 2016 00:22:57
```

Note: This error also appears if the flash contents are erased or corrupted.

2. If the firmware bootloader is encrypted, but the partition table is re-flashed with a **plaintext partition table image**, the bootloader will fail to read the partition table resulting in the following failure:

```
rst:0x3 (SW_RESET),boot:0x13 (SPI_FAST_FLASH_BOOT)
configsip: 0, SPIWP:0xee
clk_drv:0x00,q_drv:0x00,d_drv:0x00,cs0_drv:0x00,hd_drv:0x00,wp_drv:0x00
```

(continues on next page)

(continued from previous page)

```
mode:DIO, clock div:2
load:0x3fff0018,len:4
load:0x3fff001c,len:10464
ho 0 tail 12 room 4
load:0x40078000,len:19168
load:0x40080400,len:6664
entry 0x40080764
I (60) boot: ESP-IDF v4.0-dev-763-g2c55fae6c-dirty 2nd stage bootloader
I (60) boot: compile time 19:15:54
I (62) boot: Enabling RNG early entropy source...
I (67) boot: SPI Speed      : 40MHz
I (72) boot: SPI Mode       : DIO
I (76) boot: SPI Flash Size : 4MB
E (80) flash_parts: partition 0 invalid magic number 0x94f6
E (86) boot: Failed to verify partition table
E (91) boot: load partition table error!
```

3. If the bootloader and partition table are encrypted, but the application is re-flashed with a **plaintext application image**, the bootloader will fail to load the application resulting in the following failure:

```
rst:0x3 (SW_RESET),boot:0x13 (SPI_FAST_FLASH_BOOT)
configsip: 0, SPIWP:0xee
clk_drv:0x00,q_drv:0x00,d_drv:0x00,cs0_drv:0x00,hd_drv:0x00,wp_drv:0x00
mode:DIO, clock div:2
load:0x3fff0018,len:4
load:0x3fff001c,len:8452
load:0x40078000,len:13616
load:0x40080400,len:6664
entry 0x40080764
I (56) boot: ESP-IDF v4.0-dev-850-gc4447462d-dirty 2nd stage bootloader
I (56) boot: compile time 15:37:14
I (58) boot: Enabling RNG early entropy source...
I (64) boot: SPI Speed      : 40MHz
I (68) boot: SPI Mode       : DIO
I (72) boot: SPI Flash Size : 4MB
I (76) boot: Partition Table:
I (79) boot: ## Label            Usage          Type ST Offset   Length
I (87) boot:  0 nvs              WiFi data        01 02 0000a000 00006000
I (94) boot:  1 phy_init         RF data          01 01 00010000 00001000
I (102) boot:  2 factory          factory app      00 00 00020000 00100000
I (109) boot: End of partition table
E (113) esp_image: image at 0x20000 has invalid magic byte
W (120) esp_image: image at 0x20000 has invalid SPI mode 108
W (126) esp_image: image at 0x20000 has invalid SPI size 11
E (132) boot: Factory app partition is not bootable
E (138) boot: No bootable app partitions in the partition table
```

4.15.6 ESP32 Flash Encryption Status

1. Ensure that you have an ESP32 device with default flash encryption eFuse settings as shown in *Relevant eFuses*.

To check if flash encryption on your ESP32 device is enabled, do one of the following:

- flash the application example security/flash_encryption onto your device. This application prints the `FLASH_CRYPT_CNT` eFuse value and if flash encryption is enabled or disabled.
- *Find the serial port name* under which your ESP32 device is connected, replace `PORT` with your port name in the following command, and run it:

```
espefuse.py -p PORT summary
```

4.15.7 Reading and Writing Data in Encrypted Flash

ESP32 application code can check if flash encryption is currently enabled by calling *esp_flash_encryption_enabled()*. Also, a device can identify the flash encryption mode by calling *esp_get_flash_encryption_mode()*.

Once flash encryption is enabled, be more careful with accessing flash contents from code.

Scope of Flash Encryption

Whenever the FLASH_CRYPT_CNT eFuse is set to a value with an odd number of bits, all flash content accessed via the MMU's flash cache is transparently decrypted. It includes:

- Executable application code in flash (IROM).
- All read-only data stored in flash (DROM).
- Any data accessed via spi_flash_mmap().
- The firmware bootloader image when it is read by the ROM bootloader.

Important: The MMU flash cache unconditionally decrypts all existing data. Data which is stored unencrypted in flash memory will also be "transparently decrypted" via the flash cache and will appear to software as random garbage.

Reading from Encrypted Flash

To read data without using a flash cache MMU mapping, you can use the partition read function *esp_partition_read()*. This function will only decrypt data when it is read from an encrypted partition. Data read from unencrypted partitions will not be decrypted. In this way, software can access encrypted and non-encrypted flash in the same way.

You can also use the following SPI flash API functions:

- *esp_flash_read()* to read raw (encrypted) data which will not be decrypted
- *esp_flash_read_encrypted()* to read and decrypt data

The ROM function SPIRead() can read data without decryption, however, this function is not supported in esp-idf applications.

Data stored using the Non-Volatile Storage (NVS) API is always stored and read decrypted from the perspective of flash encryption. It is up to the library to provide encryption feature if required. Refer to *NVS Encryption* for more details.

Writing to Encrypted Flash

It is recommended to use the partition write function *esp_partition_write()*. This function will only encrypt data when it is written to an encrypted partition. Data written to unencrypted partitions will not be encrypted. In this way, software can access encrypted and non-encrypted flash in the same way.

You can also pre-encrypt and write data using the function *esp_flash_write_encrypted()*

Also, the following ROM function exist but not supported in esp-idf applications:

- esp_rom_spiflash_write_encrypted pre-encrypts and writes data to flash
- SPIWrite writes unencrypted data to flash

Since data is encrypted in blocks, the minimum write size for encrypted data is 16 bytes and the alignment is also 16 bytes.

4.15.8 Updating Encrypted Flash

OTA Updates

OTA updates to encrypted partitions will automatically write encrypted data if the function `esp_partition_write()` is used.

Before building the application image for OTA updating of an already encrypted device, enable the option *Enable flash encryption on boot* in project configuration menu.

For general information about ESP-IDF OTA updates, please refer to *OTA*

Updating Encrypted Flash via Serial

Flashing an encrypted device via serial bootloader requires that the serial bootloader download interface has not been permanently disabled via eFuse.

In Development Mode, the recommended method is *Re-flashing Updated Partitions*.

In Release Mode, if a copy of the same key stored in eFuse is available on the host then it's possible to pre-encrypt files on the host and then flash them. See *Manually Encrypting Files*.

4.15.9 Disabling Flash Encryption

If flash encryption was enabled accidentally, flashing of plaintext data will soft-brick the ESP32. The device will reboot continuously, printing the error `flash read err, 1000` or `invalid header: 0xXXXXXX`.

For flash encryption in Development mode, encryption can be disabled by burning the `FLASH_CRYPT_CNT` eFuse. It can only be done three times per chip by taking the following steps:

1. In *Project Configuration Menu*, disable *Enable flash encryption on boot*, then save and exit.
2. Open project configuration menu again and **double-check** that you have disabled this option! If this option is left enabled, the bootloader will immediately re-enable encryption when it boots.
3. With flash encryption disabled, build and flash the new bootloader and application by running `idf.py flash`.
4. Use `espefuse.py` (in `components/esptool_py/esptool`) to disable the `FLASH_CRYPT_CNT` by running:

```
espefuse.py burn_efuse FLASH_CRYPT_CNT
```

Reset the ESP32. Flash encryption will be disabled, and the bootloader will boot as usual.

4.15.10 Key Points About Flash Encryption

- Flash memory contents is encrypted using AES-256. The flash encryption key is stored in the `flash_encryption` eFuse internal to the chip and, by default, is protected from software access.
- The flash encryption algorithm is AES-256, where the key is "tweaked" with the offset address of each 32 byte block of flash. This means that every 32-byte block (two consecutive 16 byte AES blocks) is encrypted with a unique key derived from the flash encryption key.
- Flash access is transparent via the flash cache mapping feature of ESP32 - any flash regions which are mapped to the address space will be transparently decrypted when read.
  Some data partitions might need to remain unencrypted for ease of access or might require the use of flash-friendly update algorithms which are ineffective if the data is encrypted. NVS partitions for non-volatile storage cannot be encrypted since the NVS library is not directly compatible with flash encryption. For details, refer to *NVS Encryption*.
- If flash encryption might be used in future, the programmer must keep it in mind and take certain precautions when writing code that *uses encrypted flash*.

- If secure boot is enabled, re-flashing the bootloader of an encrypted device requires a "Re-flashable" secure boot digest (see *Flash Encryption and Secure Boot*).

Enabling flash encryption will increase the size of bootloader, which might require updating partition table offset. See *Bootloader Size*.

Important: Do not interrupt power to the ESP32 while the first boot encryption pass is running. If power is interrupted, the flash contents will be corrupted and will require flashing with unencrypted data again. In this case, re-flashing will not count towards the flashing limit.

4.15.11 Limitations of Flash Encryption

Flash encryption protects firmware against unauthorised readout and modification. It is important to understand the limitations of the flash encryption feature:

- Flash encryption is only as strong as the key. For this reason, we recommend keys are generated on the device during first boot (default behaviour). If generating keys off-device, ensure proper procedure is followed and don't share the same key between all production devices.
- Not all data is stored encrypted. If storing data on flash, check if the method you are using (library, API, etc.) supports flash encryption.
- Flash encryption does not prevent an attacker from understanding the high-level layout of the flash. This is because the same AES key is used for every pair of adjacent 16 byte AES blocks. When these adjacent 16 byte blocks contain identical content (such as empty or padding areas), these blocks will encrypt to produce matching pairs of encrypted blocks. This may allow an attacker to make high-level comparisons between encrypted devices (i.e. to tell if two devices are probably running the same firmware version).
- For the same reason, an attacker can always tell when a pair of adjacent 16 byte blocks (32 byte aligned) contain two identical 16 byte sequences. Keep this in mind if storing sensitive data on the flash, design your flash storage so this doesn't happen (using a counter byte or some other non-identical value every 16 bytes is sufficient). *NVS Encryption* deals with this and is suitable for many uses.
- Flash encryption alone may not prevent an attacker from modifying the firmware of the device. To prevent unauthorised firmware from running on the device, use flash encryption in combination with *Secure Boot*.

4.15.12 Flash Encryption and Secure Boot

It is recommended to use flash encryption in combination with Secure Boot. However, if Secure Boot is enabled, additional restrictions apply to device re-flashing:

- *OTA Updates* are not restricted, provided that the new app is signed correctly with the Secure Boot signing key.
- *Plaintext serial flash updates* are only possible if the *Re-flashable* Secure Boot mode is selected and a Secure Boot key was pre-generated and burned to the ESP32 (refer to *Secure Boot*). In such configuration, `idf.py bootloader` will produce a pre-digested bootloader and secure boot digest file for flashing at offset 0x0. When following the plaintext serial re-flashing steps it is necessary to re-flash this file before flashing other plaintext data.
- *Re-flashing via Pregenerated Flash Encryption Key* is still possible, provided the bootloader is not re-flashed. Re-flashing the bootloader requires the same *Re-flashable* option to be enabled in the Secure Boot config.

4.15.13 Advanced Features

The following section covers advanced features of flash encryption.

Encrypted Partition Flag

Some partitions are encrypted by default. Other partitions can be marked in the partition table description as requiring encryption by adding the flag `encrypted` to the partitions' flag field. As a result, data in these marked partitions will be treated as encrypted in the same manner as an app partition.

```
# Name,   Type, SubType, Offset,  Size, Flags
nvs,      data, nvs,     0x9000,  0x6000
phy_init, data, phy,     0xf000,  0x1000
factory,  app,  factory, 0x10000, 1M
secret_data, 0x40, 0x01, 0x20000, 256K, encrypted
```

For details on partition table description, see *partition table*.

Further information about encryption of partitions:

- Default partition tables do not include any encrypted data partitions.
- With flash encryption enabled, the `app` partition is always treated as encrypted and does not require marking.
- If flash encryption is not enabled, the flag "encrypted" has no effect.
- You can also consider protecting `phy_init` data from physical access, readout, or modification, by marking the optional `phy` partition with the flag `encrypted`.
- The `nvs` partition cannot be encrypted, because the NVS library is not directly compatible with flash encryption.

Enabling UART Bootloader Encryption/Decryption

On the first boot, the flash encryption process burns by default the following eFuses:

- `DISABLE_DL_ENCRYPT` which disables flash encryption operation when running in UART bootloader boot mode.
- `DISABLE_DL_DECRYPT` which disables transparent flash decryption when running in UART bootloader mode, even if the eFuse `FLASH_CRYPT_CNT` is set to enable it in normal operation.
- `DISABLE_DL_CACHE` which disables the entire MMU flash cache when running in UART bootloader mode.

However, before the first boot you can choose to keep any of these features enabled by burning only selected eFuses and write-protect the rest of eFuses with unset value 0. For example:

```
espefuse.py --port PORT burn_efuse DISABLE_DL_DECRYPT
espefuse.py --port PORT write_protect_efuse DISABLE_DL_ENCRYPT
```

Important: Leaving `DISABLE_DL_DECRYPT` unset (0) makes flash encryption useless.

An attacker with physical access to the chip can use UART bootloader mode with custom stub code to read out the flash contents.

Setting FLASH_CRYPT_CONFIG

The eFuse `FLASH_CRYPT_CONFIG` determines the number of bits in the flash encryption key which are "tweaked" with the block offset. For details, see *Flash Encryption Algorithm*.

On the first boot of the firmware bootloader, this value is set to the maximum `0xF`.

It is possible to burn this eFuse manually and write protect it before the first boot in order to select different tweak values. However, this is not recommended.

It is strongly recommended to never write-protect `FLASH_CRYPT_CONFIG` when it is unset. Otherwise, its value will remain zero permanently, and no bits in the flash encryption key will be tweaked. As a result, the flash encryption algorithm will be equivalent to AES ECB mode.

JTAG Debugging

By default, when Flash Encryption is enabled (in either Development or Release mode) then JTAG debugging is disabled via eFuse. The bootloader does this on first boot, at the same time it enables flash encryption.

See *JTAG with Flash Encryption or Secure Boot* for more information about using JTAG Debugging with Flash Encryption.

Manually Encrypting Files

Manually encrypting or decrypting files requires the flash encryption key to be pre-burned in eFuse (see *Using Host Generated Key*) and a copy to be kept on the host. If the flash encryption is configured in Development Mode then it's not necessary to keep a copy of the key or follow these steps, the simpler *Re-flashing Updated Partitions* steps can be used.

The key file should be a single raw binary file (example: `key.bin`).

For example, these are the steps to encrypt the file `build/my-app.bin` to flash at offset 0x10000. Run espsecure.py as follows:

```
espsecure.py encrypt_flash_data --keyfile /path/to/key.bin --address 0x10000 --
↪output my-app-ciphertext.bin build/my-app.bin
```

The file `my-app-ciphertext.bin` can then be flashed to offset 0x10000 using `esptool.py`. To see all of the command line options recommended for `esptool.py`, see the output printed when `idf.py build` succeeds.

Note: If the flashed ciphertext file is not recognized by the ESP32 when it boots, check that the keys match and that the command line arguments match exactly, including the correct offset.

If your ESP32 uses non-default *FLASH_CRYPT_CONFIG value in eFuse* then you will need to pass the `--flash_crypt_conf` argument to `espsecure.py` to set the matching value. This will not happen if the device configured flash encryption by itself, but may happen if burning eFuses manually to enable flash encryption.

The command `espsecure.py decrypt_flash_data` can be used with the same options (and different input/output files), to decrypt ciphertext flash contents or a previously encrypted file.

4.15.14 Technical Details

The following sections provide some reference information about the operation of flash encryption.

Flash Encryption Algorithm

- AES-256 operates on 16-byte blocks of data. The flash encryption engine encrypts and decrypts data in 32-byte blocks - two AES blocks in series.
- The main flash encryption key is stored in the `flash_encryption` eFuse and, by default, is protected from further writes or software readout.
- AES-256 key size is 256 bits (32 bytes) read from the `flash_encryption` eFuse. The hardware AES engine uses the key in reversed byte order as compared to the storage order in `flash_encryption`.
  - If the `CODING_SCHEME` eFuse is set to `0` (default, "None" Coding Scheme) then the eFuse key block is 256 bits and the key is stored as-is (in reversed byte order).
  - If the `CODING_SCHEME` eFuse is set to `1` (3/4 Encoding) then the eFuse key block is 192 bits (in reversed byte order), so overall entropy is reduced. The hardware flash encryption still operates on a 256-bit key, after being read (and un-reversed), the key is extended as `key = key[0:255] + key[64:127]`.
- AES algorithm is used inverted in flash encryption, so the flash encryption "encrypt" operation is AES decrypt and the "decrypt" operation is AES encrypt. This is for performance reasons and does not alter the effeciency of the algorithm.

- Each 32-byte block (two adjacent 16-byte AES blocks) is encrypted with a unique key. The key is derived from the main flash encryption key in `flash_encryption`, XORed with the offset of this block in the flash (a "key tweak").
- The specific tweak depends on the `FLASH_CRYPT_CONFIG` eFuse setting. This is a 4-bit eFuse where each bit enables XORing of a particular range of the key bits:
  - Bit 1, bits 0-66 of the key are XORed.
  - Bit 2, bits 67-131 of the key are XORed.
  - Bit 3, bits 132-194 of the key are XORed.
  - Bit 4, bits 195-256 of the key are XORed.

  It is recommended that `FLASH_CRYPT_CONFIG` is always left at the default value `0xF`, so that all key bits are XORed with the block offset. For details, see *Setting FLASH_CRYPT_CONFIG*.
- The high 19 bits of the block offset (bit 5 to bit 23) are XORed with the main flash encryption key. This range is chosen for two reasons: the maximum flash size is 16MB (24 bits), and each block is 32 bytes so the least significant 5 bits are always zero.
- There is a particular mapping from each of the 19 block offset bits to the 256 bits of the flash encryption key to determine which bit is XORed with which. See the variable `_FLASH_ENCRYPTION_TWEAK_PATTERN` in the `espsecure.py` source code for complete mapping.
- To see the full flash encryption algorithm implemented in Python, refer to the `_flash_encryption_operation()` function in the `espsecure.py` source code.

4.16 ESP-IDF FreeRTOS (SMP)

Note: This document assumes that the reader has a requisite understanding of Vanilla FreeRTOS (its features, behavior, and API usage). Refer to the Vanilla FreeRTOS documentation for more details.

This document describes the API and behavioral differences between Vanilla FreeRTOS and ESP-IDF FreeRTOS that were made in order to support Symmetric Multiprocessing (SMP). This document is split into the following parts.

Contents

- *ESP-IDF FreeRTOS (SMP)*
  - *Overview*
  - *Symmetric Multiprocessing*
    - *Basic Concepts*
    - *SMP on an ESP Target*
  - *Tasks*
    - *Creation*
    - *Execution*
    - *Deletion*
  - *SMP Scheduler*
    - *Fixed Priority*
    - *Preemption*
    - *Time Slicing*
    - *Tick Interrupts*
    - *Idle Tasks*
    - *Scheduler Suspension*
    - *Disabling Interrupts*
    - *Startup and Termination*
  - *Critical Sections*
    - *API Changes*
    - *Implementation*
    - *Restrictions and Considerations*
  - *Misc*
    - *Floating Point Usage*

* *ESP-IDF FreeRTOS Single Core*

4.16.1 Overview

The original FreeRTOS (hereinafter referred to as Vanilla FreeRTOS) is a small and efficient Real Time Operating System supported on many single-core MCUs and SoCs. However, numerous ESP targets (such as the ESP32 and ESP32-S3) are capable of dual core symmetric multiprocessing (SMP). Therefore, the version of FreeRTOS used in ESP-IDF (hereinafter referred to as ESP-IDF FreeRTOS) is a modified version of Vanilla FreeRTOS v10.4.3. Theses modifications allow ESP-IDF FreeRTOS to utilize the dual core SMP capabilities of ESP SoCs.

Note:

- For information regarding features that have been added to ESP-IDF FreeRTOS, see *ESP-IDF FreeRTOS Additions*.
- For a detailed ESP-IDF FreeRTOS API Reference, see *FreeRTOS API reference*.

4.16.2 Symmetric Multiprocessing

Basic Concepts

SMP (Symmetric Multiprocessing) is a computing architecture where two or more identical CPUs (cores) are connected to a single shared main memory and controlled by a single operating system. In general, an SMP system …

- has multiple cores running independently. Each core has its own register file, interrupts, and interrupt handling.
- presents an identical view of memory to each core. Thus a piece of code that accesses a particular memory address will have the same effect regardless of which core it runs on.

The main advantages of an SMP system compared to single core or Asymmetric Multiprocessing systems are that…

- the presence of multiple CPUs allows for multiple hardware threads, thus increases overall processing throughput.
- having symmetric memory means that threads can switch cores during execution. This in general can lead to better CPU utilization.

Although an SMP system allows threads to switch cores, there are scenarios where a thread must/should only run on a particular core. Therefore, threads in an SMP systems will also have a core affinity that specifies which particular core the thread is allowed to run on.

- A thread that is pinned to a particular core will only be able to run on that core
- A thread that is unpinned will be allowed to switch between cores during execution instead of being pinned to a particular core.

SMP on an ESP Target

ESP targets (such as the ESP32, ESP32-S3) are dual core SMP SoCs. These targets have the following hardware features that make them SMP capable:

- Two identical cores known as CPU0 (i.e., Protocol CPU or PRO_CPU) and CPU1 (i.e., Application CPU or APP_CPU). This means that the execution of a piece of code is identical regardless of which core it runs on.
- Symmetric memory (with some small exceptions).
  - If multiple cores access the same memory address, their access will be serialized at the memory bus level.
  - True atomic access to the same memory address is achieved via an atomic compare-and-swap instruction provided by the ISA.
- Cross-core interrupts that allow one CPU to trigger and interrupt on another CPU. This allows cores to signal each other.

Note: The "PRO_CPU" and "APP_CPU" aliases for CPU0 and CPU1 exist in ESP-IDF as they reflect how typical IDF applications will utilize the two CPUs. Typically, the tasks responsible for handling wireless networking (e.g., WiFi or Bluetooth) will be pinned to CPU0 (thus the name PRO_CPU), whereas the tasks handling the remainder of the application will be pinned to CPU1 (thus the name APP_CPU).

4.16.3 Tasks

Creation

Vanilla FreeRTOS provides the following functions to create a task:

- *xTaskCreate()* creates a task. The task's memory is dynamically allocated
- *xTaskCreateStatic()* creates a task. The task's memory is statically allocated (i.e., provided by the user)

However, in an SMP system, tasks need to be assigned a particular affinity. Therefore, ESP-IDF provides a `PinnedToCore` version of Vanilla FreeRTOS's task creation functions:

- *xTaskCreatePinnedToCore()* creates a task with a particular core affinity. The task's memory is dynamically allocated.
- *xTaskCreateStaticPinnedToCore()* creates a task with a particular core affinity. The task's memory is statically allocated (i.e., provided by the user)

The `PinnedToCore` versions of the task creation functions API differ from their vanilla counter parts by having an extra `xCoreID` parameter that is used to specify the created task's core affinity. The valid values for core affinity are:

- `0` which pins the created task to CPU0
- `1` which pins the created task to CPU1
- `tskNO_AFFINITY` which allows the task to be run on both CPUs

Note that ESP-IDF FreeRTOS still supports the vanilla versions of the task creation functions. However, they have been modified to simply call their `PinnedToCore` counterparts with `tskNO_AFFINITY`.

Note: ESP-IDF FreeRTOS also changes the units of `ulStackDepth` in the task creation functions. Task stack sizes in Vanilla FreeRTOS are specified in number of words, whereas in ESP-IDF FreeRTOS, the task stack sizes are specified in bytes.

Execution

The anatomy of a task in ESP-IDF FreeRTOS is the same as Vanilla FreeRTOS. More specifically, ESP-IDF FreeRTOS tasks:

- Can only be in one of following states: Running, Ready, Blocked, or Suspended.
- Task functions are typically implemented as an infinite loop
- Task functions should never return

Deletion

Task deletion in Vanilla FreeRTOS is called via *vTaskDelete()*. The function allows deletion of another task or the currently running task (if the provided task handle is `NULL`). The actual freeing of the task's memory is sometimes delegated to the idle task (if the task being deleted is the currently running task).

ESP-IDF FreeRTOS provides the same *vTaskDelete()* function. However, due to the dual core nature, there are some behavioral differences when calling *vTaskDelete()* in ESP-IDF FreeRTOS:

- When deleting a task that is pinned to the other core, that task's memory is always freed by the idle task of the other core (due to the need to clear FPU registers).
- When deleting a task that is currently running on the other core, a yield is triggered on the other core and the task's memory is freed by one of the idle tasks (depending on the task's core affinity)
- A deleted task's memory is freed immediately if…
  - The tasks is currently running on this core and is also pinned to this core
  - The task is not currently running and is not pinned to any core

Users should avoid calling *vTaskDelete()* on a task that is currently running on the other core. This is due to the fact that it is difficult to know what the task currently running on the other core is executing, thus can lead to unpredictable behavior such as…

- Deleting a task that is holding a mutex
- Deleting a task that has yet to free memory it previously allocated

Where possible, users should design their application such that *vTaskDelete()* is only ever called on tasks in a known state. For example:

- Tasks self deleting (via `vTaskDelete(NULL)`) when their execution is complete and have also cleaned up all resources used within the task.
- Tasks placing themselves in the suspend state (via *vTaskSuspend()*) before being deleted by another task.

4.16.4 SMP Scheduler

The Vanilla FreeRTOS scheduler is best described as a **Fixed Priority Preemptive scheduler with Time Slicing** meaning that:

- Each tasks is given a constant priority upon creation. The scheduler executes highest priority ready state task
- The scheduler can switch execution to another task without the cooperation of the currently running task
- The scheduler will periodically switch execution between ready state tasks of the same priority (in a round robin fashion). Time slicing is governed by a tick interrupt.

The ESP-IDF FreeRTOS scheduler supports the same scheduling features (i.e., Fixed Priority, Preemption, and Time Slicing) albeit with some small behavioral differences.

Fixed Priority

In Vanilla FreeRTOS, when scheduler selects a new task to run, it will always select the current highest priority ready state task. In ESP-IDF FreeRTOS, each core will independently schedule tasks to run. When a particular core selects a task, the core will select the highest priority ready state task that can be run by the core. A task can be run by the core if:

- The task has a compatible affinity (i.e., is either pinned to that core or is unpinned)
- The task is not currently being run by another core

However, users should not assume that the two highest priority ready state tasks are always run by the scheduler as a task's core affinity must also be accounted for. For example, given the following tasks:

- Task A of priority 10 pinned to CPU0
- Task B of priority 9 pinned to CPU0
- Task C of priority 8 pinned to CPU1

The resulting schedule will have Task A running on CPU0 and Task C running on CPU1. Task B is not run even though it is the second highest priority task.

Preemption

In Vanilla FreeRTOS, the scheduler can preempt the currently running task if a higher priority task becomes ready to execute. Likewise in ESP-IDF FreeRTOS, each core can be individually preempted by the scheduler if the scheduler determines that a higher priority task can run on that core.

However, there are some instances where a higher priority task that becomes ready can be run on multiple cores. In this case, the scheduler will only preempt one core. The scheduler always gives preference to the current core when multiple cores can be preempted. In other words, if the higher priority ready task is unpinned and has a higher priority than the current priority of both cores, the scheduler will always choose to preempt the current core. For example, given the following tasks:

- Task A of priority 8 currently running on CPU0
- Task B of priority 9 currently running on CPU1
- Task C of priority 10 that is unpinned and was unblocked by Task B

The resulting schedule will have Task A running on CPU0 and Task C preempting Task B given that the scheduler always gives preference to the current core.

Time Slicing

The Vanilla FreeRTOS scheduler implements time slicing meaning that if current highest ready priority contains multiple ready tasks, the scheduler will switch between those tasks periodically in a round robin fashion.

However, in ESP-IDF FreeRTOS, it is not possible to implement perfect Round Robin time slicing due to the fact that a particular task may not be able to run on a particular core due to the following reasons:

- The task is pinned to the another core.
- For unpinned tasks, the task is already being run by another core.

Therefore, when a core searches the ready state task list for a task to run, the core may need to skip over a few tasks in the same priority list or drop to a lower priority in order to find a ready state task that the core can run.

The ESP-IDF FreeRTOS scheduler implements a Best Effort Round Robin time slicing for ready state tasks of the same priority by ensuring that tasks that have been selected to run will be placed at the back of the list, thus giving unselected tasks a higher priority on the next scheduling iteration (i.e., the next tick interrupt or yield)

The following example demonstrates the Best Effort Round Robin time slicing in action. Assume that:

- There are four ready state tasks of the same priority `AX, B0, C1, D1` where: - The priority is the current highest priority with ready state tasks - The first character represents the task's names (i.e., `A, B, C, D`) - And the second character represents the tasks core pinning (and `X` means unpinned)
- The task list is always searched from the head

```
--------------------------------------------------------------------------------

1. Starting state. None of the ready state tasks have been selected to run

Head [ AX , B0 , C1 , D0 ] Tail

--------------------------------------------------------------------------------

2. Core 0 has tick interrupt and searches for a task to run.
  Task A is selected and is moved to the back of the list

Core0--|
Head [ AX , B0 , C1 , D0 ] Tail

                       0
Head [ B0 , C1 , D0 , AX ] Tail

--------------------------------------------------------------------------------

3. Core 1 has a tick interrupt and searches for a task to run.
  Task B cannot be run due to incompatible affinity, so core 1 skips to Task C.
  Task C is selected and is moved to the back of the list

Core1-------|         0
Head [ B0 , C1 , D0 , AX ] Tail
```

(continues on next page)

(continued from previous page)

```
                  0    1
Head [ B0 , D0 , AX , C1 ] Tail

-------------------------------------------------------------------------------

4. Core 0 has another tick interrupt and searches for a task to run.
  Task B is selected and moved to the back of the list


Core0--|              1
Head [ B0 , D0 , AX , C1 ] Tail

                  1    0
Head [ D0 , AX , C1 , B0 ] Tail

-------------------------------------------------------------------------------

5. Core 1 has another tick and searches for a task to run.
  Task D cannot be run due to incompatible affinity, so core 1 skips to Task A
  Task A is selected and moved to the back of the list

Core1-------|         0
Head [ D0 , AX , C1 , B0 ] Tail

                  0    1
Head [ D0 , C1 , B0 , AX ] Tail
```

The implications to users regarding the Best Effort Round Robin time slicing:

- Users cannot expect multiple ready state tasks of the same priority to run sequentially (as is the case in Vanilla FreeRTOS). As demonstrated in the example above, a core may need to skip over tasks.
- However, given enough ticks, a task will eventually be given some processing time.
- If a core cannot find a task runnable task at the highest ready state priority, it will drop to a lower priority to search for tasks.
- To achieve ideal round robin time slicing, users should ensure that all tasks of a particular priority are pinned to the same core.

Tick Interrupts

Vanilla FreeRTOS requires that a periodic tick interrupt occurs. The tick interrupt is responsible for:

- Incrementing the scheduler's tick count
- Unblocking any blocked tasks that have timed out
- Checking if time slicing is required (i.e., triggering a context switch)
- Executing the application tick hook

In ESP-IDF FreeRTOS, each core will receive a periodic interrupt and independently run the tick interrupt. The tick interrupts on each core are of the same period but can be out of phase. Furthermore, the tick interrupt responsibilities listed above are not run by all cores:

- CPU0 will execute all of the tick interrupt responsibilities listed above
- CPU1 will only check for time slicing and execute the application tick hook

---

Note: CPU0 is solely responsible for keeping time in ESP-IDF FreeRTOS. Therefore anything that prevents CPU0 from incrementing the tick count (such as suspending the scheduler on CPU0) will cause the entire schedulers time keeping to lag behind.

Idle Tasks

Vanilla FreeRTOS will implicitly create an idle task of priority 0 when the scheduler is started. The idle task runs when no other task is ready to run, and it has the following responsibilities:

- Freeing the memory of deleted tasks
- Executing the application idle hook

In ESP-IDF FreeRTOS, a separate pinned idle task is created for each core. The idle tasks on each core have the same responsibilities as their vanilla counterparts.

Scheduler Suspension

Vanilla FreeRTOS allows the scheduler to be suspended/resumed by calling `vTaskSuspendAll()` and `xTaskResumeAll()` respectively. While the scheduler is suspended:

- Task switching is disabled but interrupts are left enabled.
- Calling any blocking/yielding function is forbidden, and time slicing is disabled.
- The tick count is frozen (but the tick interrupt will still occur to execute the application tick hook)

On scheduler resumption, `xTaskResumeAll()` will catch up all of the lost ticks and unblock any timed out tasks.

In ESP-IDF FreeRTOS, suspending the scheduler across multiple cores is not possible. Therefore when `vTaskSuspendAll()` is called:

- Task switching is disabled only on the current core but interrupts for the current core are left enabled
- Calling any blocking/yielding function on the current core is forbidden. Time slicing is disabled on the current core.
- If suspending on CPU0, the tick count is frozen. The tick interrupt will still occur to execute the application tick hook.

When resuming the scheduler on CPU0, `xTaskResumeAll()` will catch up all of the lost ticks and unblock any timed out tasks.

Warning: Given that scheduler suspension on ESP-IDF FreeRTOS will only suspend scheduling on a particular core, scheduler suspension is **NOT** a valid method ensuring mutual exclusion between tasks when accessing shared data. Users should use proper locking primitives such as mutexes or spinlocks if they require mutual exclusion.

Disabling Interrupts

Vanilla FreeRTOS allows interrupts to be disabled and enabled by calling `taskDISABLE_INTERRUPTS` and `taskENABLE_INTERRUPTS` respectively.

ESP-IDF FreeRTOS provides the same API, however interrupts will only disabled or enabled on the current core.

Warning: Disabling interrupts is a valid method of achieve mutual exclusion in Vanilla FreeRTOS (and single core systems in general). However, in an SMP system, disabling interrupts is **NOT** a valid method ensuring mutual exclusion. Refer to Critical Sections for more details.

Startup and Termination

ESP-IDF FreeRTOS **does not** require users to call `vTaskStartScheduler()` to start the scheduler. The startup flow of an ESP-IDF application will already call this automatically. The entry point for user code is a user defined `void app_main(void)` function. For more details regarding the startup of ESP-IDF FreeRTOS applications, see *ESP-IDF FreeRTOS Applications*.

ESP-IDF FreeRTOS **does not** support scheduler termination. Calling `vTaskEndScheduler()` will simply cause the application to abort.

4.16.5 Critical Sections

API Changes

Vanilla FreeRTOS implements critical sections by disabling interrupts, This prevents preemptive context switches and the servicing of ISRs during a critical section. Thus a task/ISR that enters a critical section is guaranteed to be the sole entity to access a shared resource. Critical sections in Vanilla FreeRTOS have the following API:

- `taskENTER_CRITICAL()` enters a critical section by disabling interrupts
- `taskEXIT_CRITICAL()` exits a critical section by reenabling interrupts
- `taskENTER_CRITICAL_FROM_ISR()` enters a critical section from an ISR by disabling interrupt nesting
- `taskEXIT_CRITICAL_FROM_ISR()` exits a critical section from an ISR by reenabling interrupt nesting

However, in an SMP system, merely disabling interrupts does not constitute a critical section as the presence of other cores means that a shared resource can still be concurrently accessed. Therefore, critical sections in ESP-IDF FreeRTOS are implemented using spinlocks. To accommodate the spinlocks, the ESP-IDF FreeRTOS critical section APIs contain an additional spinlock parameter as shown below:

- Spinlocks are of `portMUX_TYPE` (**not to be confused to FreeRTOS mutexes**)
- `taskENTER_CRITICAL(&mux)` enters a critical from a task context
- `taskEXIT_CRITICAL(&mux)` exits a critical section from a task context
- `taskENTER_CRITICAL_ISR(&mux)` enters a critical section from an interrupt context
- `taskEXIT_CRITICAL_ISR(&mux)` exits a critical section from an interrupt context

Note: The critical section API can be called recursively (i.e., nested critical sections). Entering a critical section multiple times recursively is valid so long as the critical section is exited the same number of times it was entered. However, given that critical sections can target different spinlocks, users should take care to avoid dead locking when entering critical sections recursively.

Implementation

In ESP-IDF FreeRTOS, the process of a particular core entering and exiting a critical section is as follows:

- For `taskENTER_CRITICAL(&mux)` (or `taskENTER_CRITICAL_ISR(&mux)`)
  1. The core disables its interrupts (or interrupt nesting) up to `configMAX_SYSCALL_INTERRUPT_PRIORITY`
  2. The core then spins on the spinlock using an atomic compare-and-set instruction until it acquires the lock. A lock is acquired when the core is able to set the lock's owner value to the core's ID.
  3. Once the spinlock is acquired, the function returns. The remainder of the critical section runs with interrupts (or interrupt nesting) disabled.
- For `taskEXIT_CRITICAL(&mux)` (or `taskEXIT_CRITICAL_ISR(&mux)`)
  1. The core releases the spinlock by clearing the spinlock's owner value
  2. The core re-enables interrupts (or interrupt nesting)

Restrictions and Considerations

Given that interrupts (or interrupt nesting) are disabled during a critical section, there are multiple restrictions regarding what can be done within a critical sections. During a critical section, users should keep the following restrictions and considerations in mind:

- Critical sections should be as kept as short as possible
  - The longer the critical section lasts, the longer a pending interrupt can be delayed.
  - A typical critical section should only access a few data structures and/or hardware registers
  - If possible, defer as much processing and/or event handling to the outside of critical sections.
- FreeRTOS API should not be called from within a critical section
- Users should never call any blocking or yielding functions within a critical section

4.16.6 Misc

Floating Point Usage

Usually, when a context switch occurs:

- the current state of a CPU's registers are saved to the stack of task being switch out
- the previously saved state of the CPU's registers are loaded from the stack of the task being switched in

However, ESP-IDF FreeRTOS implements Lazy Context Switching for the FPU (Floating Point Unit) registers of a CPU. In other words, when a context switch occurs on a particular core (e.g., CPU0), the state of the core's FPU registers are not immediately saved to the stack of the task getting switched out (e.g., Task A). The FPU's registers are left untouched until:

- A different task (e.g., Task B) runs on the same core and uses the FPU. This will trigger an exception that will save the FPU registers to Task A's stack.
- Task A get's scheduled to the same core and continues execution. Saving and restoring the FPU's registers is not necessary in this case.

However, given that tasks can be unpinned thus can be scheduled on different cores (e.g., Task A switches to CPU1), it is unfeasible to copy and restore the FPU's registers across cores. Therefore, when a task utilizes the FPU (by using a `float` type in its call flow), ESP-IDF FreeRTOS will automatically pin the task to the current core it is running on. This ensures that all tasks that uses the FPU are always pinned to a particular core.

Furthermore, ESP-IDF FreeRTOS by default does not support the usage of the FPU within an interrupt context given that the FPU's register state is tied to a particular task.

Note: ESP targets that contain an FPU do not support hardware acceleration for double precision floating point arithmetic (`double`). Instead `double` is implemented via software hence the behavioral restrictions regarding the `float` type do not apply to `double`. Note that due to the lack of hardware acceleration, `double` operations may consume significantly more CPU time in comparison to `float`.

ESP-IDF FreeRTOS Single Core

Although ESP-IDF FreeRTOS is an SMP scheduler, some ESP targets are single core (such as the ESP32-S2 and ESP32-C3). When building ESP-IDF applications for these targets, ESP-IDF FreeRTOS is still used but the number of cores will be set to *1* (i.e., the *CONFIG_FREERTOS_UNICORE* will always be enabled for single core targets).

For multicore targets (such as the ESP32 and ESP32-S3), *CONFIG_FREERTOS_UNICORE* can also be set. This will result in ESP-IDF FreeRTOS only running on CPU0, and all other cores will be inactive.

Note: Users should bear in mind that enabling *CONFIG_FREERTOS_UNICORE* **is NOT equivalent to running Vanilla FreeRTOS**. The additional API of ESP-IDF FreeRTOS can still be called, and the behavior changes of ESP-IDF FreeRTOS will incur a small amount of overhead even when compiled for only a single core.

4.17 Hardware Abstraction

Hardware abstraction in ESP-IDF are a group of API that allow users to control peripherals at differing levels of abstraction, as opposed to interfacing with hardware using only the ESP-IDF drivers. ESP-IDF Hardware abstraction will likely be useful for users writing high performance bare-metal drivers, or for those attempting to port an ESP chip to another platform.

This guide is split into the following sections:

1. *Architecture*
2. *LL (Low Level) Layer*
3. *HAL (Hardware Abstraction Layer)*

Warning: Hardware abstraction API (excluding the driver and `xxx_types.h`) should be considered an experimental feature, thus cannot be considered public API. Hardware abstraction API do not adhere to the API name changing restrictions of ESP-IDF's versioning scheme. In other words, it is possible that Hardware Abstraction API may change in between non-major release versions.

Note: Although this document mainly focuses on hardware abstraction of peripherals (e.g., UART, SPI, I2C), certain layers of hardware abstraction extend to other aspects of hardware as well (e.g., some of the CPU's features are partially abstracted).

4.17.1 Architecture

Hardware abstraction in ESP-IDF is comprised of the following layers, ordered from low level (closer to hardware) to high level (further away from hardware) of abstraction.

- Low Level (LL) Layer
- Hardware Abstraction Layer (HAL)
- Driver Layers

The LL Layer, and HAL are entirely contained within the `hal` component. Each layer is dependent on the layer below it (i.e, driver depends on HAL, HAL depends on LL, LL depends on the register header files).

For a particular peripheral `xxx`, its hardware abstraction will generally consist of the header files described in the table below. Files that are **Target Specific** will have a separate implementation for each target (i.e., a separate copy for each chip). However, the `#include` directive will still be target-independent (i.e., will be the same for different targets) as the build system will automatically include the correct version of the header and source files.

Table 21: Hardware Abstraction Header Files

Include Directive	Target Specific	Description
`#include 'soc/xxx_caps.h"`	Y	This header contains a list of C macros specifying the various capabilities of the ESP32's peripheral `xxx`. Hardware capabilities of a peripheral include things such as the number of channels, DMA support, hardware FIFO/buffer lengths, etc.
`#include "soc/xxx_struct.h"` `#include "soc/xxx_reg.h"`	Y	The two headers contain a representation of a peripheral's registers in C structure and C macro format respectively. Users can operate a peripheral at the register level via either of these two header files.
`#include "soc/xxx_pins.h"`	Y	If certain signals of a peripheral are mapped to a particular pin of the ESP32, their mappings are defined in this header as C macros.
`#include "soc/xxx_periph.h"`	N	This header is mainly used as a convenience header file to automatically include `xxx_caps.h`, `xxx_struct.h`, and `xxx_reg.h`.
`#include "hal/xxx_types.h`	N	This header contains type definitions and macros that are shared among the LL, HAL, and driver layers. Moreover, it is considered public API thus can be included by the application level. The shared types and definitions usually related to non-implementation specific concepts such as the following: • Protocol related types/macros such a frames, modes, common bus speeds, etc. • Features/characteristics of an `xxx` peripheral that are likely to be present on any implementation (implementation-independent) such as channels, operating modes, signal amplification or attenuation intensities, etc.
`#include "hal/xxx_ll.h"`	Y	This header contains the Low Level (LL) Layer of hardware abstraction. LL Layer API are primarily used to abstract away register operations into readable functions.
`#include "hal/xxx_hal.h"`	Y	The Hardware Abstraction Layer (HAL) is used to abstract away peripheral operation steps into functions (e.g., reading a buffer, starting a transmission, handling an event, etc). The HAL is built on top of the LL Layer.
`#include "driver/xxx.h"`	N	The driver layer is the highest level of ESP-IDF's hardware abstraction. Driver layer API are meant to be called from ESP-IDF applications, and internally utilize OS primitives. Thus, driver layer API are event-driven, and can used in a multi-threaded environment.

4.17.2 LL (Low Level) Layer

The primary purpose of the LL Layer is to abstract away register field access into more easily understandable functions. LL functions essentially translate various in/out arguments into the register fields of a peripheral in the form of get/set functions. All the necessary bit shifting, masking, offsetting, and endianness of the register fields should be handled by the LL functions.

```
//Inside xxx_ll.h

static inline void xxx_ll_set_baud_rate(xxx_dev_t *hw,
                                        xxx_ll_clk_src_t clock_source,
                                        uint32_t baud_rate) {
    uint32_t src_clk_freq = (source_clk == XXX_SCLK_APB) ? APB_CLK_FREQ : REF_CLK_
↪FREQ;
    uint32_t clock_divider = src_clk_freq / baud;
    // Set clock select field
    hw->clk_div_reg.divider = clock_divider >> 4;
    // Set clock divider field
```

(continues on next page)

(continued from previous page)

```
    hw->config.clk_sel = (source_clk == XXX_SCLK_APB) ? 0 : 1;
}

static inline uint32_t xxx_ll_get_rx_byte_count(xxx_dev_t *hw) {
    return hw->status_reg.rx_cnt;
}
```

The code snippet above illustrates typical LL functions for a peripheral `xxx`. LL functions typically have the following characteristics:

- All LL functions are defined as `static inline` so that there is minimal overhead when calling these functions due to compiler optimization.
- The first argument should be a pointer to a `xxx_dev_t` type. The `xxx_dev_t` type is a structure representing the peripheral's registers, thus the first argument is always a pointer to the starting address of the peripheral's registers. Note that in some cases where the peripheral has multiple channels with identical register layouts, `xxx_dev_t *hw` may point to the registers of a particular channel instead.
- LL functions should be short and in most cases are deterministic. In other words, the worst case runtime of the LL function can be determined at compile time. Thus, any loops in LL functions should be finite bounded; however, there are currently a few exceptions to this rule.
- LL functions are not thread safe, it is the responsibility of the upper layers (driver layer) to ensure that registers or register fields are not accessed concurrently.

4.17.3 HAL (Hardware Abstraction Layer)

The HAL layer models the operational process of a peripheral as a set of general steps, where each step has an associated function. For each step, the details of a peripheral's register implementation (i.e., which registers need to be set/read) are hidden (abstracted away) by the HAL. By modelling peripheral operation as a set of functional steps, any minor hardware implementation differences of the peripheral between different targets or chip versions can be abstracted away by the HAL (i.e., handled transparently). In other words, the HAL API for a particular peripheral will remain mostly the same across multiple targets/chip versions.

The following HAL function examples are selected from the Watchdog Timer HAL as each function maps to one of the steps in a WDT's operation life cycle, thus illustrating how a HAL abstracts a peripheral's operation into functional steps.

```
// Initialize one of the WDTs
void wdt_hal_init(wdt_hal_context_t *hal, wdt_inst_t wdt_inst, uint32_t prescaler,␣
↪bool enable_intr);

// Configure a particular timeout stage of the WDT
void wdt_hal_config_stage(wdt_hal_context_t *hal, wdt_stage_t stage, uint32_t␣
↪timeout, wdt_stage_action_t behavior);

// Start the WDT
void wdt_hal_enable(wdt_hal_context_t *hal);

// Feed (i.e., reset) the WDT
void wdt_hal_feed(wdt_hal_context_t *hal);

// Handle a WDT timeout
void wdt_hal_handle_intr(wdt_hal_context_t *hal);

// Stop the WDT
void wdt_hal_disable(wdt_hal_context_t *hal);

// De-initialize the WDT
void wdt_hal_deinit(wdt_hal_context_t *hal);
```

HAL functions will generally have the following characteristics:

- The first argument to a HAL function has the `xxx_hal_context_t *` type. The HAL context type is used to store information about a particular instance of the peripheral (i.e. the context instance). A HAL context is initialized by the `xxx_hal_init()` function and can store information such as the following:
  - The channel number of this instance
  - Pointer to the peripheral's (or channel's) registers (i.e., a `xxx_dev_t *` type)
  - Information about an ongoing transaction (e.g., pointer to DMA descriptor list in use)
  - Some configuration values for the instance (e.g., channel configurations)
  - Variables to maintain state information regarding the instance (e.g., a flag to indicate if the instance is waiting for transaction to complete)
- HAL functions should not contain any OS primitives such as queues, semaphores, mutexes, etc. All synchronization/concurrency should be handled at higher layers (e.g., the driver).
- Some peripherals may have steps that cannot be further abstracted by the HAL, thus will end up being a direct wrapper (or macro) for an LL function.
- Some HAL functions may be placed in IRAM thus may carry an `IRAM_ATTR` or be placed in a separate `xxx_hal_iram.c` source file.

4.18 High-Level Interrupts

The Xtensa architecture has support for 32 interrupts, divided over 7 levels (levels 1 to 7, with 7 being an NMI), plus an assortment of exceptions. On the ESP32, the interrupt mux allows most interrupt sources to be routed to these interrupts using the *interrupt allocator*. Normally, interrupts will be written in C, but ESP-IDF allows high-level interrupts to be written in assembly as well, resulting in very low interrupt latencies.

4.18.1 Interrupt Levels

Level	Symbol	Remark
1	N/A	Exception and level 0 interrupts. Handled by ESP-IDF
2-3	N/A	Medium level interrupts. Handled by ESP-IDF
4	xt_highint4	Free to use *(See 1)*
5	xt_highint5	Normally used by ESP-IDF debug logic *(See 1)*
NMI	xt_nmi	Free to use
dbg	xt_debugexception	Debug exception. Called on e.g. a BREAK instruction. *(See 2)*

The following notes give more information about the items in the tables above.

1. ESP-IDF debug logic can be configured to run on *xt_highint4* or *xt_highint5* in *CONFIG_ESP_SYSTEM_CHECK_INT_LEVEL*. Bluetooth's interrupt can be configured to run on level 4 by enabling *CONFIG_BTDM_CTRL_HLI*. If *CONFIG_BTDM_CTRL_HLI* is enabled, ESP-IDF debug logic must be running on level 5 interrupt.
2. If *CONFIG_BTDM_CTRL_HLI* is enabled, *xt_debugexception* is used to fix live lock issue in ESP32 ECO3.

Using these symbols is done by creating an assembly file (suffix .S) and defining the named symbols, like this:

```
    .section .iram1,"ax"
    .global     xt_highint5
    .type       xt_highint5,@function
    .align      4
xt_highint5:
    ... your code here
    rsr     a0, EXCSAVE_5
    rfi     5
```

For a real-life example, see the esp_system/port/soc/esp32/highint_hdl.S file; the panic handler interrupt is implemented there.

4.18.2 Notes

- Do not call C code from a high-level interrupt; as these interrupts are run from a critical section, this can cause the target to crash. Note that although the panic handler interrupt does call normal C code, this exception is allowed due to the fact that this handler never returns (i.e., the application will not continue to run after the panic handler). so breaking C code execution flow is not a problem.
  When *CONFIG_BTDM_CTRL_HLI* is enabled, C code is also called from a high-level interrupt, this is possible thanks to some additional protection added to it.
- Make sure your assembly code gets linked in. Indeed, as the free-to-use symbols are declared as weak, the linker may discard the file containing the symbol. This will happen if the only symbol defined, or used, from the user file is the `xt_*` free-to-use symbol. To avoid this, in the assembly file containing the `xt_*` symbol, define another symbol, like:

```
        .global ld_include_my_isr_file
   ld_include_my_isr_file:

Here it is called ``ld_include_my_isr_file`` but can have any name, as long as␣
↪it is not defined anywhere else in the project.

Then, in the component ``CMakeLists.txt``, add this name as an unresolved␣
↪symbol to the ld command line arguments::

    target_link_libraries(${COMPONENT_TARGET} "-u ld_include_my_isr_file")

This should cause the linker to always include the file defining ``ld_include_
↪my_isr_file``, causing the ISR to always be linked in.
```

This should cause the linker to always include a file defining `ld_include_my_isr_file`, causing the ISR to always be lin

- High-level interrupts can be routed and handled using *`esp_intr_alloc()`* and associated functions. The handler and handler arguments to *`esp_intr_alloc()`* must be NULL, however.
- In theory, medium priority interrupts could also be handled in this way. ESP-IDF does not support this yet.

If using the legacy Make build system, add the following to component.mk, instead:

```
COMPONENT_ADD_LDFLAGS := -u ld_include_my_isr_file
```

4.19 JTAG Debugging

This document provides a guide to installing OpenOCD for ESP32 and debugging using GDB. The document is structured as follows:

Introduction Introduction to the purpose of this guide.
How it Works? Description how ESP32, JTAG interface, OpenOCD and GDB are interconnected and working together to enable debugging of ESP32.
Selecting JTAG Adapter What are the criteria and options to select JTAG adapter hardware.
Setup of OpenOCD Procedure to install OpenOCD and verify that it is installed.
Configuring ESP32 Target Configuration of OpenOCD software and setting up of JTAG adapter hardware, which together make up the debugging target.
Launching Debugger Steps to start up a debug session with GDB from *Eclipse* and from *Command Line*.
Debugging Examples If you are not familiar with GDB, check this section for debugging examples provided from *Eclipse* as well as from *Command Line*.
Building OpenOCD from Sources Procedure to build OpenOCD from sources for *Windows*, *Linux* and *macOS* operating systems.
Tips and Quirks This section provides collection of tips and quirks related to JTAG debugging of ESP32 with OpenOCD and GDB.

4.19.1 Introduction

The ESP32 has two powerful Xtensa cores, allowing for a great deal of variety of program architectures. The FreeRTOS OS that comes with ESP-IDF is capable of multi-core preemptive scheduling, allowing for an intuitive way of writing software.

The downside of the ease of programming is that debugging without the right tools is harder: figuring out a bug that is caused by two threads, running even simultaneously on two different CPU cores, can take a long time when all you have are `printf()` statements. A better (and in many cases quicker) way to debug such problems is by using a debugger, connected to the processors over a debug port.

Espressif has ported OpenOCD to support the ESP32 processor and the multi-core FreeRTOS（which is the foundation of most ESP32 apps). Additionally, some extra tools have been written to provide extra features that OpenOCD does not support natively.

This document provides a guide to installing OpenOCD for ESP32 and debugging using GDB under Linux, Windows and macOS. Except for OS specific installation procedures, the s/w user interface and use procedures are the same across all supported operating systems.

Note: Screenshots presented in this document have been made for Eclipse Neon 3 running on Ubuntu 16.04 LTS. There may be some small differences in what a particular user interface looks like, depending on whether you are using Windows, macOS or Linux and / or a different release of Eclipse.

4.19.2 How it Works?

The key software and hardware components that perform debugging of ESP32 with OpenOCD over JTAG (Joint Test Action Group) interface is presented in the diagram below under the "Debugging With JTAG" label. These components include xtensa-esp32-elf-gdb debugger, OpenOCD on chip debugger, and the JTAG adapter connected to ESP32 target.

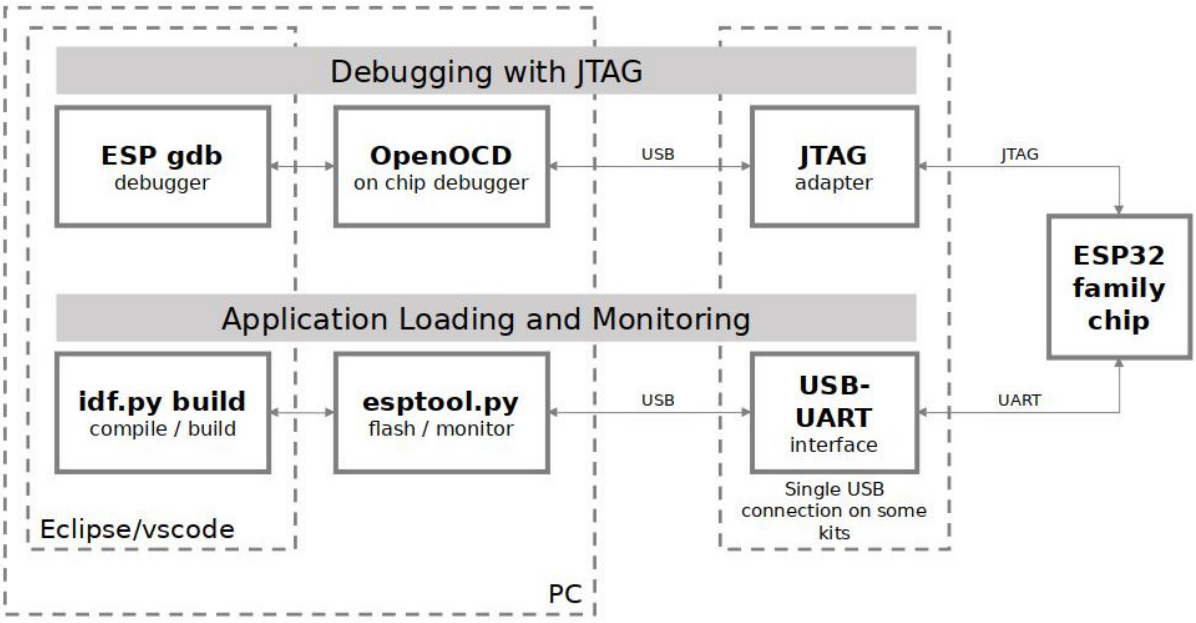

Fig. 33: JTAG debugging - overview diagram

Likewise, the "Application Loading and Monitoring" label indicates the key software and hardware components that allow an application to be compiled, built, and flashed to ESP32, as well as to provide means to monitor diagnostic messages from ESP32.

"Debugging With JTAG" and "Application Loading and Monitoring" is integrated under the Eclipse IDE in order to provide a quick and easy transition between writing/compiling/loading/debugging code. The Eclipse IDE (and the integrated debugging software) is available for Windows, Linux and macOS platforms. Depending on user preferences, both the debugger and `idf.py build` can also be used directly from terminal/command line, instead of Eclipse.

If the *ESP-WROVER-KIT* is used, then connection from PC to ESP32 is done effectively with a single USB cable. This is made possible by the FT2232H chip, which provides two USB channels, one for JTAG and the other for UART connection.

4.19.3 Selecting JTAG Adapter

The quickest and most convenient way to start with JTAG debugging is by using *ESP-WROVER-KIT*. Each version of this development board has JTAG interface already built in. No need for an external JTAG adapter and extra wiring / cable to connect JTAG to ESP32. ESP-WROVER-KIT is using FT2232H JTAG interface operating at 20 MHz clock speed, which is difficult to achieve with an external adapter.

If you decide to use separate JTAG adapter, look for one that is compatible with both the voltage levels on the ESP32 as well as with the OpenOCD software. The JTAG port on the ESP32 is an industry-standard JTAG port which lacks (and does not need) the TRST pin. The JTAG I/O pins all are powered from the VDD_3P3_RTC pin (which normally would be powered by a 3.3 V rail) so the JTAG adapter needs to be able to work with JTAG pins in that voltage range.

On the software side, OpenOCD supports a fair amount of JTAG adapters. See http://openocd.org/doc/html/Debug-Adapter-Hardware.html for an (unfortunately slightly incomplete) list of the adapters OpenOCD works with. This page lists SWD-compatible adapters as well; take note that the ESP32 does not support SWD. JTAG adapters that are hardcoded to a specific product line, e.g. ST-LINK debugging adapters for STM32 families, will not work.

The minimal signalling to get a working JTAG connection are TDI, TDO, TCK, TMS and GND. Some JTAG debuggers also need a connection from the ESP32 power line to a line called e.g. Vtar to set the working voltage. SRST can optionally be connected to the CH_PD of the ESP32, although for now, support in OpenOCD for that line is pretty minimal.

ESP-Prog is an example for using an external board for debugging by connecting it to the JTAG pins of ESP32.

4.19.4 Setup of OpenOCD

If you have already set up ESP-IDF with CMake build system according to the *Getting Started Guide*, then OpenOCD is already installed. After *setting up the environment* in your terminal, you should be able to run OpenOCD. Check this by executing the following command:

```
openocd --version
```

The output should be as follows (although the version may be more recent than listed here):

```
Open On-Chip Debugger  v0.10.0-esp32-20190708 (2019-07-08-11:04)
Licensed under GNU GPL v2
For bug reports, read
    http://openocd.org/doc/doxygen/bugs.html
```

You may also verify that OpenOCD knows where its configuration scripts are located by printing the value of `OPENOCD_SCRIPTS` environment variable, by typing `echo $OPENOCD_SCRIPTS` (for Linux and macOS) or `echo %OPENOCD_SCRIPTS%` (for Windows). If a valid path is printed, then OpenOCD is set up correctly.

If any of these steps do not work, please go back to the *setting up the tools* section of the Getting Started Guide.

Note: It is also possible to build OpenOCD from source. Please refer to *Building OpenOCD from Sources* section for details.

4.19.5 Configuring ESP32 Target

Once OpenOCD is installed, you can proceed to configuring the ESP32 target (i.e ESP32 board with JTAG interface). Configuring the target is split into the following three steps:

- Configure and connect JTAG interface
- Run OpenOCD
- Upload application for debugging

Configure and connect JTAG interface

This step depends on the JTAG and ESP32 board you are using (see the two cases described below).

Configure ESP-WROVER-KIT JTAG Interface

All versions of ESP-WROVER-KIT boards have built-in JTAG functionality. Putting it to work requires setting jumpers or DIP switches to enable JTAG functionality, and configuring USB drivers. Please refer to step by step instructions below.

Configure Hardware

- Enable on-board JTAG functionality by setting JP8 according to *ESP-WROVER-KIT V4.1 Getting Started Guide*, Section *Setup Options*.
- Verify if ESP32 pins used for JTAG communication are not connected to some other h/w that may disturb JTAG operation:

Table 22: ESP32 JTAG pins

ESP32 Pin	JTAG Signal
MTDO / GPIO15	TDO
MTDI / GPIO12	TDI
MTCK / GPIO13	TCK
MTMS / GPIO14	TMS
GND	GND

Configure USB Drivers Install and configure USB drivers, so OpenOCD is able to communicate with JTAG interface on ESP-WROVER-KIT board as well as with UART interface used to upload application for flash. Follow steps below specific to your operating system.

Note: ESP-WROVER-KIT uses an FT2232 adapter. The following instructions can also be used for other FT2232 based JTAG adapters.

Windows

1. Using standard USB A / micro USB B cable connect ESP-WROVER-KIT to the computer. Switch the ESP-WROVER-KIT on.
2. Wait until USB ports of ESP-WROVER-KIT are recognized by Windows and drives are installed. If they do not install automatically, then download them from https://www.ftdichip.com/Drivers/D2XX.htm and install manually.
3. Download Zadig tool (Zadig_X.X.exe) from https://zadig.akeo.ie/ and run it.
4. In Zadig tool go to "Options" and check "List All Devices".
5. Check the list of devices that should contain two ESP-WROVER-KIT specific USB entries: "Dual RS232-HS (Interface 0)" and "Dual RS232-HS (Interface 1)". The driver name would be "FTDIBUS (vxxxx)" and USB ID: 0403 6010.

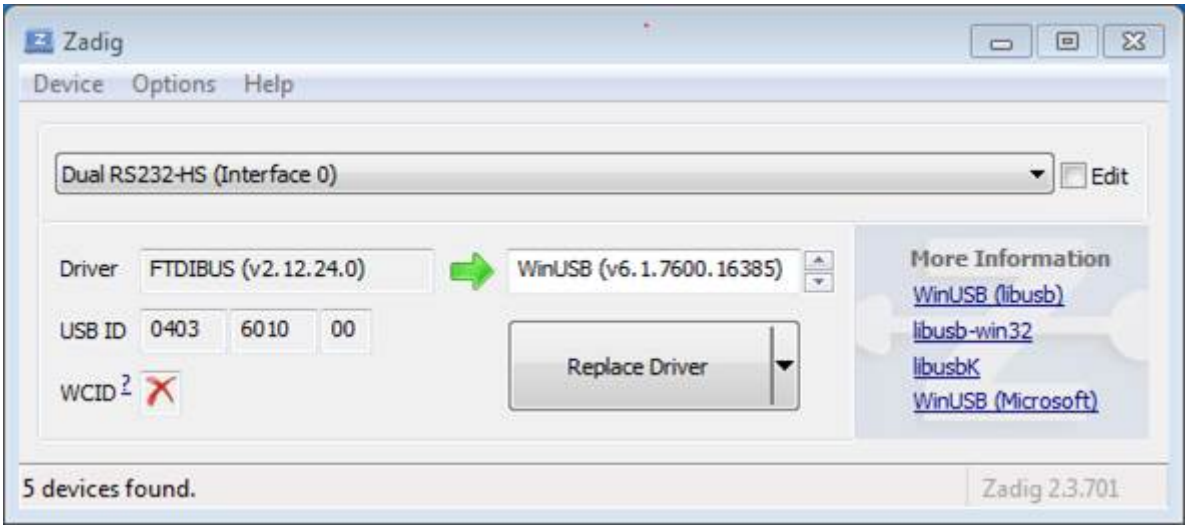

Fig. 34: Configuration of JTAG USB driver in Zadig tool

6. The first device (Dual RS232-HS (Interface 0)) is connected to the JTAG port of the ESP32. Original "FTDIBUS (vxxxx)" driver of this device should be replaced with "WinUSB (v6xxxxx)". To do so, select "Dual RS232-HS (Interface 0) and reinstall attached driver to the "WinUSB (v6xxxxx)", see picture above.

Note: Do not change the second device "Dual RS232-HS (Interface 1)". It is routed to ESP32's serial port (UART) used for upload of application to ESP32's flash.

Now ESP-WROVER-KIT's JTAG interface should be available to the OpenOCD. To carry on with debugging environment setup, proceed to section *Run OpenOCD*.

Linux

1. Using standard USB A / micro USB B cable connect ESP-WROVER-KIT board to the computer. Power on the board.
2. Open a terminal, enter `ls -l /dev/ttyUSB*` command and check, if board's USB ports are recognized by the OS. You are looking for similar result:

```
user-name@computer-name:~/esp$ ls -l /dev/ttyUSB*
crw-rw---- 1 root dialout 188, 0 Jul 10 19:04 /dev/ttyUSB0
crw-rw---- 1 root dialout 188, 1 Jul 10 19:04 /dev/ttyUSB1
```

3. Following section "Permissions delegation" in OpenOCD's README, set up the access permissions to both USB ports.
4. Log off and login, then cycle the power to the board to make the changes effective. In terminal enter again `ls -l /dev/ttyUSB*` command to verify, if group-owner has changed from `dialout` to `plugdev`:

```
user-name@computer-name:~/esp$ ls -l /dev/ttyUSB*
crw-rw-r-- 1 root plugdev 188, 0 Jul 10 19:07 /dev/ttyUSB0
crw-rw-r-- 1 root plugdev 188, 1 Jul 10 19:07 /dev/ttyUSB1
```

   If you see similar result and you are a member of `plugdev` group, then the set up is complete.
   The `/dev/ttyUSBn` interface with lower number is used for JTAG communication. The other interface is routed to ESP32's serial port (UART) used for upload of application to ESP32's flash.

Now ESP-WROVER-KIT's JTAG interface should be available to the OpenOCD. To carry on with debugging environment setup, proceed to section *Run OpenOCD*.

MacOS On macOS, using FT2232 for JTAG and serial port at the same time needs some additional steps. When the OS loads FTDI serial port driver, it does so for both channels of FT2232 chip. However only one of these channels is used as a serial port, while the other is used as JTAG. If the OS has loaded FTDI serial port driver for the channel used for JTAG, OpenOCD will not be able to connect to the chip. There are two ways around this:

1. Manually unload the FTDI serial port driver before starting OpenOCD, start OpenOCD, then load the serial port driver.
2. Modify FTDI driver configuration so that it doesn't load itself for channel B of FT2232 chip, which is the channel used for JTAG on ESP-WROVER-KIT.

Manually unloading the driver

1. Install FTDI driver from https://www.ftdichip.com/Drivers/VCP.htm
2. Connect USB cable to the ESP-WROVER-KIT.
3. Unload the serial port driver:

   ```
   sudo kextunload -b com.FTDI.driver.FTDIUSBSerialDriver
   ```

   In some cases you may need to unload Apple's FTDI driver as well:
   - macOS < 10.15:

     ```
     sudo kextunload -b com.apple.driver.AppleUSBFTDI
     ```

   - macOS 10.15:

     ```
     sudo kextunload -b com.apple.DriverKit-AppleUSBFTDI
     ```

   Warning: Attempting to use serial over the wrong channel with the FTDI driver will cause a kernel panic. The ESP-WROVER-KIT uses channel A for JTAG and channel B for serial.

4. Run OpenOCD:

   ```
   openocd -f board/esp32-wrover-kit-3.3v.cfg
   ```

5. In another terminal window, load FTDI serial port driver again:

   ```
   sudo kextload -b com.FTDI.driver.FTDIUSBSerialDriver
   ```

Note: If you need to restart OpenOCD, there is no need to unload FTDI driver again —just stop OpenOCD and start it again. The driver only needs to be unloaded if ESP-WROVER-KIT was reconnected or power was toggled.

This procedure can be wrapped into a shell script, if desired.

Modifying FTDI driver In a nutshell, this approach requires modification to FTDI driver configuration file, which prevents the driver from being loaded for channel B of FT2232H.

Note: Other boards may use channel A for JTAG, so use this option with caution.

Warning: This approach also needs signature verification of drivers to be disabled, so may not be acceptable for all users.

1. Open FTDI driver configuration file using a text editor (note `sudo`):

   ```
   sudo nano /Library/Extensions/FTDIUSBSerialDriver.kext/Contents/Info.plist
   ```

2. Find and delete the following lines:

```
<key>FT2232H_B</key>
<dict>
    <key>CFBundleIdentifier</key>
    <string>com.FTDI.driver.FTDIUSBSerialDriver</string>
    <key>IOClass</key>
    <string>FTDIUSBSerialDriver</string>
    <key>IOProviderClass</key>
    <string>IOUSBInterface</string>
    <key>bConfigurationValue</key>
    <integer>1</integer>
    <key>bInterfaceNumber</key>
    <integer>1</integer>
    <key>bcdDevice</key>
    <integer>1792</integer>
    <key>idProduct</key>
    <integer>24592</integer>
    <key>idVendor</key>
    <integer>1027</integer>
</dict>
```

3. Save and close the file
4. Disable driver signature verification:
    1. Open Apple logo menu, choose "Restart…"
    2. When you hear the chime after reboot, press CMD+R immediately
    3. Once Recovery mode starts up, open Terminal
    4. Run the command:

    ```
    csrutil enable --without kext
    ```

    5. Restart again

After these steps, serial port and JTAG can be used at the same time.

To carry on with debugging environment setup, proceed to section *Run OpenOCD*.

Configure Other JTAG Interfaces

For guidance about which JTAG interface to select when using OpenOCD with ESP32, refer to the section *Selecting JTAG Adapter*. Then follow the configuration steps below to get it working.

Configure Hardware

1. Identify all pins/signals on JTAG interface and ESP32 board that should be connected to establish communication.

Table 23: ESP32 JTAG pins

ESP32 Pin	JTAG Signal
MTDO / GPIO15	TDO
MTDI / GPIO12	TDI
MTCK / GPIO13	TCK
MTMS / GPIO14	TMS
GND	GND

2. Verify if ESP32 pins used for JTAG communication are not connected to some other hardware that may disturb JTAG operation.
3. Connect identified pin/signals of ESP32 and JTAG interface.

Configure Drivers You may need to install driver software to make JTAG work with computer. Refer to documentation of your JTAG adapter for related details.

Connect Connect JTAG interface to the computer. Power on ESP32 and JTAG interface boards. Check if the JTAG interface is visible on the computer.

To carry on with debugging environment setup, proceed to section *Run OpenOCD*.

Run OpenOCD

Once target is configured and connected to computer, you are ready to launch OpenOCD.

Open a terminal and set it up for using the ESP-IDF as described in the *setting up the environment* section of the Getting Started Guide. Then run OpenOCD (this command works on Windows, Linux, and macOS):

```
openocd -f board/esp32-wrover-kit-3.3v.cfg
```

Note: The files provided after `-f` above are specific for ESP-WROVER-KIT with ESP32-WROOM-32 module. You may need to provide different files depending on the hardware that is used. For guidance see *Configuration of OpenOCD for specific target*.

For example, `board/esp32c3-ftdi.cfg` can be used for a custom board with an FT2232H or FT232H chip used for JTAG connection, or with ESP-Prog.

You should now see similar output (this log is for ESP-WROVER-KIT with ESP32-WROOM-32 module):

```
user-name@computer-name:~/esp/esp-idf$ openocd -f board/esp32-wrover-kit-3.3v.cfg
Open On-Chip Debugger  v0.10.0-esp32-20190708 (2019-07-08-11:04)
Licensed under GNU GPL v2
For bug reports, read
        http://openocd.org/doc/doxygen/bugs.html
none separate
adapter speed: 20000 kHz
force hard breakpoints
Info : ftdi: if you experience problems at higher adapter clocks, try the command
↪"ftdi_tdo_sample_edge falling"
Info : clock speed 20000 kHz
Info : JTAG tap: esp32.cpu0 tap/device found: 0x120034e5 (mfg: 0x272 (Tensilica),␣
↪part: 0x2003, ver: 0x1)
Info : JTAG tap: esp32.cpu1 tap/device found: 0x120034e5 (mfg: 0x272 (Tensilica),␣
↪part: 0x2003, ver: 0x1)
Info : esp32: Debug controller was reset (pwrstat=0x5F, after clear 0x0F).
Info : esp32: Core was reset (pwrstat=0x5F, after clear 0x0F).
```

- If there is an error indicating permission problems, please see section on "Permissions delegation" in the OpenOCD README file located in the `~/esp/openocd-esp32` directory.
- In case there is an error in finding the configuration files, e.g. `Can't find board/esp32-wrover-kit-3.3v.cfg`, check if the `OPENOCD_SCRIPTS` environment variable is set correctly. This variable is used by OpenOCD to look for the files specified after the `-f` option. See *Setup of OpenOCD* section for details. Also check if the file is indeed under the provided path.
- If you see JTAG errors (e.g., `...all ones` or `...all zeroes`), please check your JTAG connections, whether other signals are connected to JTAG besides ESP32's pins, and see if everything is powered on correctly.

Upload application for debugging

Build and upload your application to ESP32 as usual, see *Step 8. Build the Project*.

Another option is to write application image to flash using OpenOCD via JTAG with commands like this:

```
openocd -f board/esp32-wrover-kit-3.3v.cfg -c "program_esp filename.bin 0x10000␣
↪verify exit"
```

OpenOCD flashing command `program_esp` has the following format:

```
program_esp <image_file> <offset> [verify] [reset] [exit]
```

- `image_file` - Path to program image file.
- `offset` - Offset in flash bank to write image.
- `verify` - Optional. Verify flash contents after writing.
- `reset` - Optional. Reset target after programing.
- `exit` - Optional. Finally exit OpenOCD.

You are now ready to start application debugging. Follow the steps described in the section below.

4.19.6 Launching Debugger

The toolchain for ESP32 features GNU Debugger, in short GDB. It is available with other toolchain programs under filename: xtensa-esp32-elf-gdb. GDB can be called and operated directly from command line in a terminal. Another option is to call it from within IDE (like Eclipse, Visual Studio Code, etc.) and operate indirectly with help of GUI instead of typing commands in a terminal.

Both options of using debugger are discussed under links below.

- *Eclipse*
- *Command Line*

It is recommended to first check if debugger works from *Command Line* and then move to using *Eclipse*.

4.19.7 Debugging Examples

This section is intended for users not familiar with GDB. It presents example debugging session from *Eclipse* using simple application available under get-started/blink and covers the following debugging actions:

1. *Navigating through the code, call stack and threads*
2. *Setting and clearing breakpoints*
3. *Halting the target manually*
4. *Stepping through the code*
5. *Checking and setting memory*
6. *Watching and setting program variables*
7. *Setting conditional breakpoints*

Similar debugging actions are provided using GDB from *Command Line*.

Before proceeding to examples, set up your ESP32 target and load it with get-started/blink.

4.19.8 Building OpenOCD from Sources

Please refer to separate documents listed below, that describe build process.

Building OpenOCD from Sources for Windows

Note: This document outlines how to build a binary of OpenOCD from its source files instead of downloading the pre-built binary. For a quick setup, users can download a pre-built binary of OpenOCD from Espressif GitHub instead of compiling it themselves (see *Setup of OpenOCD* for more details).

Note: All code snippets in this document are assumed to be running in an MSYS2 shell with the MINGW32 subsystem.

Install Dependencies Install packages that are required to compile OpenOCD:

```
pacman -S --noconfirm --needed autoconf automake git make \
mingw-w64-i686-gcc \
mingw-w64-i686-toolchain \
mingw-w64-i686-libtool \
mingw-w64-i686-pkg-config \
mingw-w64-cross-winpthreads-git \
p7zip
```

Download Sources of OpenOCD The sources for the ESP32-enabled variant of OpenOCD are available from Espressif's GitHub under https://github.com/espressif/openocd-esp32. These source files can be pulled via Git using the following commands:

```
cd ~/esp
git clone --recursive https://github.com/espressif/openocd-esp32.git
```

The clone of sources should be now saved in `~/esp/openocd-esp32` directory.

Downloading libusb The libusb library is also required when building OpenOCD. The following commands will download a particular release of libusb and uncompress it to the current directory.

```
wget https://github.com/libusb/libusb/releases/download/v1.0.22/libusb-1.0.22.7z
7z x -olibusb ./libusb-1.0.22.7z
```

We now need to export the following variables such that the libusb library gets linked into the OpenOCD build.

```
export CPPFLAGS="$CPPFLAGS -I${PWD}/libusb/include/libusb-1.0"
export LDFLAGS="$LDFLAGS -L${PWD}/libusb/MinGW32/.libs/dll"
```

Build OpenOCD The following commands will configure OpenOCD then build it.

```
cd ~/esp/openocd-esp32
export CPPFLAGS="$CPPFLAGS -D__USE_MINGW_ANSI_STDIO=1 -Wno-error"; export CFLAGS="
↪$CFLAGS -Wno-error"
./bootstrap
./configure --disable-doxygen-pdf --enable-ftdi --enable-jlink --enable-ulink --
↪build=i686-w64-mingw32 --host=i686-w64-mingw32
make
cp ../libusb/MinGW32/dll/libusb-1.0.dll ./src
cp /opt/i686-w64-mingw32/bin/libwinpthread-1.dll ./src
```

Once the build is completed, the OpenOCD binary will be placed in `~/esp/openocd-esp32/src/`.

You can then optionally call `make install`. This will copy the OpenOCD binary to a user specified location.

- This location can be specified when OpenOCD is configured, or by setting `export DESTDIR="/custom/install/dir"` before calling `make install`.
- If you have an existing OpenOCD (from e.g. another development platform), you may want to skip this call as your existing OpenOCD may get overwritten.

Note:

- Should an error occur, resolve it and try again until the command `make` works.
- If there is a submodule problem from OpenOCD, please `cd` to the `openocd-esp32` directory and input `git submodule update --init`.
- If the `./configure` is successfully run, information of enabled JTAG will be printed under `OpenOCD configuration summary`.
- If the information of your device is not shown in the log, use `./configure` to enable it as described in `../openocd-esp32/doc/INSTALL.txt`.
- For details concerning compiling OpenOCD, please refer to `openocd-esp32/README.Windows`.
- Don't forget to copy *libusb-1.0.dll* and *libwinpthread-1.dll* into *OOCD_INSTALLDIR/bin* from `~/esp/openocd-esp32/src`.

Once `make` process is successfully completed, the executable of OpenOCD will be saved in `~/esp/openocd-esp32/src` directory.

Full Listing For greater convenience, all of commands called throughout the OpenOCD build process have been listed in the code snippet below. Users can copy this code snippet into a shell script then execute it:

```
pacman -S --noconfirm --needed autoconf automake git make mingw-w64-i686-gcc mingw-
↪w64-i686-toolchain mingw-w64-i686-libtool mingw-w64-i686-pkg-config mingw-w64-
↪cross-winpthreads-git p7zip
cd ~/esp
git clone --recursive https://github.com/espressif/openocd-esp32.git

wget https://github.com/libusb/libusb/releases/download/v1.0.22/libusb-1.0.22.7z
7z x -olibusb ./libusb-1.0.22.7z
export CPPFLAGS="$CPPFLAGS -I${PWD}/libusb/include/libusb-1.0"; export LDFLAGS="
↪$LDFLAGS -L${PWD}/libusb/MinGW32/.libs/dll"

export CPPFLAGS="$CPPFLAGS -D__USE_MINGW_ANSI_STDIO=1 -Wno-error"; export CFLAGS="
↪$CFLAGS -Wno-error"
cd ~/esp/openocd-esp32
./bootstrap
./configure --disable-doxygen-pdf --enable-ftdi --enable-jlink --enable-ulink --
↪build=i686-w64-mingw32 --host=i686-w64-mingw32
make
cp ../libusb/MinGW32/dll/libusb-1.0.dll ./src
cp /opt/i686-w64-mingw32/bin/libwinpthread-1.dll ./src

# # optional
# export DESTDIR="$PWD"
# make install
# cp ./src/libusb-1.0.dll $DESTDIR/mingw32/bin
# cp ./src/libwinpthread-1.dll $DESTDIR/mingw32/bin
```

Next Steps To carry on with debugging environment setup, proceed to section *Configuring ESP32 Target*.

Building OpenOCD from Sources for Linux

The following instructions are alternative to downloading binary OpenOCD from Espressif GitHub. To quickly setup the binary OpenOCD, instead of compiling it yourself, backup and proceed to section *Setup of OpenOCD*.

Download Sources of OpenOCD The sources for the ESP32-enabled variant of OpenOCD are available from Espressif GitHub under https://github.com/espressif/openocd-esp32. To download the sources, use the following commands:

```
cd ~/esp
git clone --recursive https://github.com/espressif/openocd-esp32.git
```

The clone of sources should be now saved in `~/esp/openocd-esp32` directory.

Install Dependencies Install packages that are required to compile OpenOCD.

Note: Install the following packages one by one, check if installation was successful and then proceed to the next package. Resolve reported problems before moving to the next step.

```
sudo apt-get install make
sudo apt-get install libtool
sudo apt-get install pkg-config
sudo apt-get install autoconf
sudo apt-get install automake
sudo apt-get install texinfo
sudo apt-get install libusb-1.0
```

Note:

- Version of pkg-config should be 0.2.3 or above.
- Version of autoconf should be 2.6.4 or above.
- Version of automake should be 1.9 or above.
- When using USB-Blaster, ASIX Presto, OpenJTAG and FT2232 as adapters, drivers libFTDI and FTD2XX need to be downloaded and installed.
- When using CMSIS-DAP, HIDAPI is needed.

Build OpenOCD Proceed with configuring and building OpenOCD:

```
cd ~/esp/openocd-esp32
./bootstrap
./configure
make
```

Optionally you can add `sudo make install` step at the end. Skip it, if you have an existing OpenOCD (from e.g. another development platform), as it may get overwritten.

Note:

- Should an error occur, resolve it and try again until the command `make` works.
- If there is a submodule problem from OpenOCD, please `cd` to the `openocd-esp32` directory and input `git submodule update --init`.
- If the `./configure` is successfully run, information of enabled JTAG will be printed under `OpenOCD configuration summary`.
- If the information of your device is not shown in the log, use `./configure` to enable it as described in `../openocd-esp32/doc/INSTALL.txt`.
- For details concerning compiling OpenOCD, please refer to `openocd-esp32/README`.

Once `make` process is successfully completed, the executable of OpenOCD will be saved in `~/openocd-esp32/bin` directory.

Next Steps To carry on with debugging environment setup, proceed to section *Configuring ESP32 Target*.

Building OpenOCD from Sources for MacOS

The following instructions are alternative to downloading binary OpenOCD from Espressif GitHub. To quickly setup the binary OpenOCD, instead of compiling it yourself, backup and proceed to section *Setup of OpenOCD*.

Download Sources of OpenOCD The sources for the ESP32-enabled variant of OpenOCD are available from Espressif GitHub under https://github.com/espressif/openocd-esp32. To download the sources, use the following commands:

```
cd ~/esp
git clone --recursive https://github.com/espressif/openocd-esp32.git
```

The clone of sources should be now saved in `~/esp/openocd-esp32` directory.

Install Dependencies Install packages that are required to compile OpenOCD using Homebrew:

```
brew install automake libtool libusb wget gcc@4.9 pkg-config
```

Build OpenOCD Proceed with configuring and building OpenOCD:

```
cd ~/esp/openocd-esp32
./bootstrap
./configure
make
```

Optionally you can add `sudo make install` step at the end. Skip it, if you have an existing OpenOCD (from e.g. another development platform), as it may get overwritten.

Note:

- Should an error occur, resolve it and try again until the command `make` works.
- If there is a submodule problem from OpenOCD, please `cd` to the `openocd-esp32` directory and input `git submodule update --init`.
- If the `./configure` is successfully run, information of enabled JTAG will be printed under `OpenOCD configuration summary`.
- If the information of your device is not shown in the log, use `./configure` to enable it as described in `../openocd-esp32/doc/INSTALL.txt`.
- For details concerning compiling OpenOCD, please refer to `openocd-esp32/README.OSX`.

Once `make` process is successfully completed, the executable of OpenOCD will be saved in `~/esp/openocd-esp32/src/openocd` directory.

Next Steps To carry on with debugging environment setup, proceed to section *Configuring ESP32 Target*.

The examples of invoking OpenOCD in this document assume using pre-built binary distribution described in section *Setup of OpenOCD*.

To use binaries build locally from sources, change the path to OpenOCD executable to `src/openocd` and set the `OPENOCD_SCRIPTS` environment variable so that OpenOCD can find the configuration files. For Linux and macOS:

```
cd ~/esp/openocd-esp32
export OPENOCD_SCRIPTS=$PWD/tcl
```

For Windows:

```
cd %USERPROFILE%\esp\openocd-esp32
set "OPENOCD_SCRIPTS=%CD%\tcl"
```

Example of invoking OpenOCD build locally from sources, for Linux and macOS:

```
src/openocd -f board/esp32-wrover-kit-3.3v.cfg
```

and Windows:

```
src\openocd -f board\esp32-wrover-kit-3.3v.cfg
```

4.19.9 Tips and Quirks

This section provides collection of links to all tips and quirks referred to from various parts of this guide.

Tips and Quirks

This section provides collection of all tips and quirks referred to from various parts of this guide.

Breakpoints and watchpoints available ESP32 debugger supports 2 hardware implemented breakpoints and 64 software ones. Hardware breakpoints are implemented by ESP32 chip's logic and can be set anywhere in the code: either in flash or IRAM program's regions. Additionally there are 2 types of software breakpoints implemented by OpenOCD: flash (up to 32) and IRAM (up to 32) breakpoints. Currently GDB can not set software breakpoints in flash. So until this limitation is removed those breakpoints have to be emulated by OpenOCD as hardware ones (see *below* for details). ESP32 also supports two watchpoints, so two variables can be watched for change or read by the GDB command `watch myVariable`. Note that menuconfig option *CONFIG_FREERTOS_WATCHPOINT_END_OF_STACK* uses the 2nd watchpoint and will not provide expected results, if you also try to use it within OpenOCD / GDB. See menuconfig's help for detailed description.

What else should I know about breakpoints? Emulating part of hardware breakpoints using software flash ones means that the GDB command `hb myFunction` which is invoked for function in flash will use pure hardware breakpoint if it is avalable otherwise one of the 32 software flash breakpoints is used. The same rule applies to `b myFunction`-like commands. In this case GDB will decide what type of breakpoint to set itself. If `myFunction` is resided in writable region (IRAM) software IRAM breakpoint will be used otherwise hardware or software flash breakpoint is used as it is done for `hb` command.

Flash Mappings vs SW Flash Breakpoints In order to set/clear software breakpoints in flash, OpenOCD needs to know their flash addresses. To accomplish conversion from the ESP32 address space to the flash one, OpenOCD uses mappings of program's code regions resided in flash. Those mappings are kept in the image header which is prepended to program binary data (code and data segments) and is specific to every application image written to the flash. So to support software flash breakpoints OpenOCD should know where application image under debugging is resided in the flash. By default OpenOCD reads partition table at 0x8000 and uses mappings from the first found application image, but there can be the cases when it will not work, e.g. partition table is not at standard flash location or even there can be multiple images: one factory and two OTA and you may want to debbug any of them. To cover all possible debugging scenarios OpenOCD supports special command which can be used to set arbitrary location of application image to debug. The command has the following format:

```
esp appimage_offset <offset>
```

Offset should be in hex format. To reset to the default behaviour you can specify `-1` as offset.

Note: Since GDB requests memory map from OpenOCD only once when connecting to it, this command should be specified in one of the TCL configuration files, or passed to OpenOCD via its command line. In the latter case command line should look like below:

```
openocd -f board/esp32-wrover-kit-3.3v.cfg -c "init; halt; esp appimage_offset␣
↪0x210000"
```

Another option is to execute that command via OpenOCD telnet session and then connect GDB, but it seems to be less handy.

Why stepping with "next" does not bypass subroutine calls? When stepping through the code with `next` command, GDB is internally setting a breakpoint (one out of two available) ahead in the code to bypass the subroutine calls. This functionality will not work, if the two available breakpoints are already set elsewhere in the code. If this is the case, delete breakpoints to have one "spare". With both breakpoints already used, stepping through the code with `next` command will work as like with `step` command and debugger will step inside subroutine calls.

Support options for OpenOCD at compile time ESP-IDF has some support options for OpenOCD debugging which can be set at compile time:

- *CONFIG_ESP32_DEBUG_OCDAWARE* is enabled by default. If a panic or unhandled exception is thrown and a JTAG debugger is connected (ie OpenOCD is running), ESP-IDF will break into the debugger.
- *CONFIG_FREERTOS_WATCHPOINT_END_OF_STACK* (disabled by default) sets watchpoint index 1 (the second of two) at the end of any task stack. This is the most accurate way to debug task stack overflows. Click the link for more details.

Please see the *project configuration menu* menu for more details on setting compile-time options.

FreeRTOS support OpenOCD has explicit support for the ESP-IDF FreeRTOS. GDB can see FreeRTOS tasks as threads. Viewing them all can be done using the GDB `i threads` command, changing to a certain task is done with `thread n`, with `n` being the number of the thread. FreeRTOS detection can be disabled in target's configuration. For more details see *Configuration of OpenOCD for specific target*.

Why to set SPI flash voltage in OpenOCD configuration? The MTDI pin of ESP32, being among four pins used for JTAG communication, is also one of ESP32's bootstrapping pins. On power up ESP32 is sampling binary level on MTDI to set it's internal voltage regulator used to supply power to external SPI flash chip. If binary level on MDTI pin on power up is low, the voltage regulator is set to deliver 3.3 V, if it is high, then the voltage is set to 1.8 V. The MTDI pin should have a pull-up or may rely on internal weak pull down resistor (see ESP32 Series Datasheet for details), depending on the type of SPI chip used. Once JTAG is connected, it overrides the pull-up or pull-down resistor that is supposed to do the bootstrapping.

To handle this issue OpenOCD's board configuration file (e.g. `board\esp32-wrover-kit-3.3v.cfg` for ESP-WROVER-KIT board) provides `ESP32_FLASH_VOLTAGE` parameter to set the idle state of the `TDO` line to a specified binary level, therefore reducing the chance of a bad bootup of application due to incorrect flash voltage.

Check specification of ESP32 module connected to JTAG, what is the power supply voltage of SPI flash chip. Then set `ESP32_FLASH_VOLTAGE` accordingly. Most WROOM modules use 3.3 V flash. WROVER earlier than ESP32-WROVER-B use 1.8 V flash, while ESP32-WROVER-B and -E modules use 3.3 V flash.

Optimize JTAG speed In order to achieve higher data rates and minimize number of dropped packets it is recommended to optimize setting of JTAG clock frequency, so it is at maximum and still provides stable operation of JTAG. To do so use the following tips.

1. The upper limit of JTAG clock frequency is 20 MHz if CPU runs at 80 MHz, or 26 MHz if CPU runs at 160 MHz or 240 MHz.
2. Depending on particular JTAG adapter and the length of connecting cables, you may need to reduce JTAG frequency below 20 / 26 MHz.

3. In particular reduce frequency, if you get DSR/DIR errors (and they do not relate to OpenOCD trying to read from a memory range without physical memory being present there).
4. ESP-WROVER-KIT operates stable at 20 / 26 MHz.

What is the meaning of debugger' s startup commands? On startup, debugger is issuing sequence of commands to reset the chip and halt it at specific line of code. This sequence (shown below) is user defined to pick up at most convenient / appropriate line and start debugging.

- `set remote hardware-watchpoint-limit 2` —Restrict GDB to using two hardware watchpoints supported by the chip, 2 for ESP32. For more information see https://sourceware.org/gdb/onlinedocs/gdb/Remote-Configuration.html.
- `mon reset halt` —reset the chip and keep the CPUs halted
- `flushregs` —monitor (`mon`) command can not inform GDB that the target state has changed. GDB will assume that whatever stack the target had before `mon reset halt` will still be valid. In fact, after reset the target state will change, and executing `flushregs` is a way to force GDB to get new state from the target.
- `thb app_main` —insert a temporary hardware breakpoint at `app_main`, put here another function name if required
- `c` —resume the program. It will then stop at breakpoint inserted at `app_main`.

Configuration of OpenOCD for specific target There are several kinds of OpenOCD configuration files (`*.cfg`). All configuration files are located in subdirectories of `share/openocd/scripts` directory of OpenOCD distribution (or `tcl/scripts` directory of the source repository). For the purposes of this guide, the most important ones are `board`, `interface` and `target`.

- `interface` configuration files describe the JTAG adapter. Examples of JTAG adapters are ESP-Prog and J-Link.
- `target` configuration files describe specific chips, or in some cases, modules.
- `board` configuration files are provided for development boards with a built-in JTAG adapter. Such files include an `interface` configuration file to choose the adapter, and `target` configuration file to choose the chip/module.

The following configuration files are available for ESP32:

Table 24: OpenOCD configuration files for ESP32

Name	Description
`board/esp32-wrover-kit-3.3v.cfg`	Board configuration file for ESP-WROVER-KIT with a 3.3 V ESP32-WROOM-32 module or ESP32-WROVER-B / ESP32-WROVER-E module.
`board/esp32-wrover-kit-1.8v.cfg`	Board configuration file for ESP-WROVER-KIT with an 1.8 V ESP32-WROVER module.
`board/esp32-ethernet-kit-3v.cfg`	Board configuration file for ESP-Ethernet-KIT with a 3.3 V ESP32-WROVER-B / ESP32-WROVER-E module.
`target/esp32.cfg`	ESP32 target configuration file. Can be used together with one of the `interface/` configuration files.
`target/esp32-solo-1.cfg`	Target configuration file for ESP32-SOLO-1 module. Different from `esp32.cfg` in that it only configures one CPU.
`interface/ftdi/esp32_devkitj_v1.cfg`	JTAG adapter configuration file for ESP-WROVER-KIT and ESP-Prog boards.

If you are using one of the boards which have a pre-defined configuration file, you only need to pass one `-f` argument to OpenOCD, specifying that file.

If you are using a board not listed here, you need to specify both the interface configuration file and target configuration file.

Custom configuration files OpenOCD configuration files are written in TCL, and include a variety of choices for customization and scripting. This can be useful for non-standard debugging situations. Please refer to OpenOCD Manual for the TCL scripting reference.

OpenOCD configuration variables The following variables can be optionally set before including the ESP-specific target configuration file. This can be done either in a custom configuration file, or from the command line.

The syntax for setting a variable in TCL is:

```
set VARIABLE_NAME value
```

To set a variable from the command line (replace the name of .cfg file with the correct file for your board):

```
openocd -c 'set VARIABLE_NAME value' -f board/esp-xxxxx-kit.cfg
```

It is important to set the variable before including the ESP-specific configuration file, otherwise the variable will not have effect. You can set multiple variables by repeating the `-c` option.

Table 25: Common ESP-related OpenOCD variables

Variable	Description
`ESP_RTOS`	Set to `none` to disable RTOS support. In this case, thread list will not be available in GDB. Can be useful when debugging FreeRTOS itself, and stepping through the scheduler code.
`ESP_FLASH_SIZE`	Set to `0` to disable Flash breakpoints support.
`ESP_SEMIHOST_BASEDIR`	Set to the path (on the host) which will be the default directory for semihosting functions.

Table 26: ESP32-specific OpenOCD variables

Name	Description
`ESP32_FLASH_VOLTAGE`	When using 1.8 V flash ESP32 based modules, set this variable to `1.8`. Refer to *Why to set SPI flash voltage in OpenOCD configuration?*.
`ESP32_ONLYCPU`	For multi-core targets, can be set to `1` to only enable single core debugging.

How debugger resets ESP32? The board can be reset by entering `mon reset` or `mon reset halt` into GDB.

Do not use JTAG pins for something else Operation of JTAG may be disturbed, if some other h/w is connected to JTAG pins besides ESP32 module and JTAG adapter. ESP32 JTAG is using the following pins:

Table 27: ESP32 JTAG pins

ESP32 Pin	JTAG Signal
MTDO / GPIO15	TDO
MTDI / GPIO12	TDI
MTCK / GPIO13	TCK
MTMS / GPIO14	TMS
GND	GND

JTAG communication will likely fail, if configuration of JTAG pins is changed by user application. If OpenOCD initializes correctly (detects the two Tensilica cores), but loses sync and spews out a lot of DTR/DIR errors when the program is ran, it is likely that the application reconfigures the JTAG pins to something else, or the user forgot to connect Vtar to a JTAG adapter that needed it.

Below is an excerpt from series of errors reported by GDB after the application stepped into the code that reconfigured MTDO pin to be an input:

```
cpu0: xtensa_resume (line 431): DSR (FFFFFFFF) indicates target still busy!
cpu0: xtensa_resume (line 431): DSR (FFFFFFFF) indicates DIR instruction generated␣
↪an exception!
cpu0: xtensa_resume (line 431): DSR (FFFFFFFF) indicates DIR instruction generated␣
↪an overrun!
cpu1: xtensa_resume (line 431): DSR (FFFFFFFF) indicates target still busy!
cpu1: xtensa_resume (line 431): DSR (FFFFFFFF) indicates DIR instruction generated␣
↪an exception!
cpu1: xtensa_resume (line 431): DSR (FFFFFFFF) indicates DIR instruction generated␣
↪an overrun!
```

JTAG with Flash Encryption or Secure Boot By default, enabling Flash Encryption and/or Secure Boot will disable JTAG debugging. On first boot, the bootloader will burn an eFuse bit to permanently disable JTAG at the same time it enables the other features.

The project configuration option *CONFIG_SECURE_BOOT_ALLOW_JTAG* will keep JTAG enabled at this time, removing all physical security but allowing debugging. (Although the name suggests Secure Boot, this option can be applied even when only Flash Encryption is enabled).

However, OpenOCD may attempt to automatically read and write the flash in order to set *software breakpoints*. This has two problems:

- Software breakpoints are incompatible with Flash Encryption, OpenOCD currently has no support for encrypting or decrypting flash contents.
- If Secure Boot is enabled, setting a software breakpoint will change the digest of a signed app and make the signature invalid. This means if a software breakpoint is set and then a reset occurs, the signature verification will fail on boot.

To disable software breakpoints while using JTAG, add an extra argument `-c 'set ESP_FLASH_SIZE 0'` to the start of the OpenOCD command line, see *OpenOCD configuration variables*.

Note: For the same reason, the ESP-IDF app may fail bootloader verification of app signatures, when this option is enabled and a software breakpoint is set.

JTAG and ESP32-WROOM-32 AT firmware Compatibility Issue The ESP32-WROOM series of modules come pre-flashed with AT firmware. This firmware configures the pins GPIO12 to GPIO15 as SPI slave interface, which makes using JTAG impossible.

To make JTAG available, build new firmware that is not using pins GPIO12 to GPIO15 dedicated to JTAG communication. After that, flash the firmware onto your module. See also *Do not use JTAG pins for something else*.

Reporting issues with OpenOCD / GDB In case you encounter a problem with OpenOCD or GDB programs itself and do not find a solution searching available resources on the web, open an issue in the OpenOCD issue tracker under https://github.com/espressif/openocd-esp32/issues.

1. In issue report provide details of your configuration:
   a. JTAG adapter type, and the chip/module being debugged.
   b. Release of ESP-IDF used to compile and load application that is being debugged.
   c. Details of OS used for debugging.
   d. Is OS running natively on a PC or on a virtual machine?
2. Create a simple example that is representative to observed issue. Describe steps how to reproduce it. In such an example debugging should not be affected by non-deterministic behaviour introduced by the Wi-Fi stack, so problems will likely be easier to reproduce, if encountered once.
3. Prepare logs from debugging session by adding additional parameters to start up commands.
   OpenOCD:

```
openocd -l openocd_log.txt -d3 -f board/esp32-wrover-kit-3.3v.cfg
```

Logging to a file this way will prevent information displayed on the terminal. This may be a good thing taken amount of information provided, when increased debug level `-d3` is set. If you still like to see the log on the screen, then use another command instead:

```
openocd -d3 -f board/esp32-wrover-kit-3.3v.cfg 2>&1 | tee openocd.log
```

Debugger:

```
xtensa-esp32-elf-gdb -ex "set remotelogfile gdb_log.txt" <all other options>
```

Optionally add command `remotelogfile gdb_log.txt` to the `gdbinit` file.

4. Attach both `openocd_log.txt` and `gdb_log.txt` files to your issue report.

4.19.10 Related Documents

Using Debugger

This section covers configuration and running debugger using several methods:

- from *Eclipse*
- from *Command Line*
- using *idf.py debug targets*

Eclipse

Note: It is recommended to first check if debugger works using *idf.py debug targets* or from *Command Line* and then move to using Eclipse.

Debugging functionality is provided out of box in standard Eclipse installation. Another option is to use pluggins like "GDB Hardware Debugging" plugin. We have found this plugin quite convenient and decided to use throughout this guide.

To begin with, install "GDB Hardware Debugging" plugin by opening Eclipse and going to *Help* > *Install* New Software.

Once installation is complete, configure debugging session following steps below. Please note that some of configuration parameters are generic and some are project specific. This will be shown below by configuring debugging for "blink" example project. If not done already, add this project to Eclipse workspace following guidance in section *Build and Flash with Eclipse IDE*. The source of get-started/blink application is available in examples directory of ESP-IDF repository.

1. In Eclipse go to *Run* > *Debug Configuration*. A new window will open. In the window's left pane double click "GDB Hardware Debugging" (or select "GDB Hardware Debugging" and press the "New" button) to create a new configuration.
2. In a form that will show up on the right, enter the "Name:" of this configuration, e.g. "Blink checking".
3. On the "Main" tab below, under "Project:", press "Browse" button and select the "blink" project.
4. In next line "C/C++ Application:" press "Browse" button and select "blink.elf" file. If "blink.elf" is not there, then likely this project has not been build yet. See *Build and Flash with Eclipse IDE* how to do it.
5. Finally, under "Build (if required) before launching" click "Disable auto build".
   A sample window with settings entered in points 1 - 5 is shown below.
6. Click "Debugger" tab. In field "GDB Command" enter `xtensa-esp32-elf-gdb` to invoke debugger.
7. Change default configuration of "Remote host" by entering `3333` under the "Port number".
   Configuration entered in points 6 and 7 is shown on the following picture.
8. The last tab to that requires changing of default configuration is "Startup". Under "Initialization Commands" uncheck "Reset and Delay (seconds)" and "Halt"". Then, in entry field below, enter the following lines:

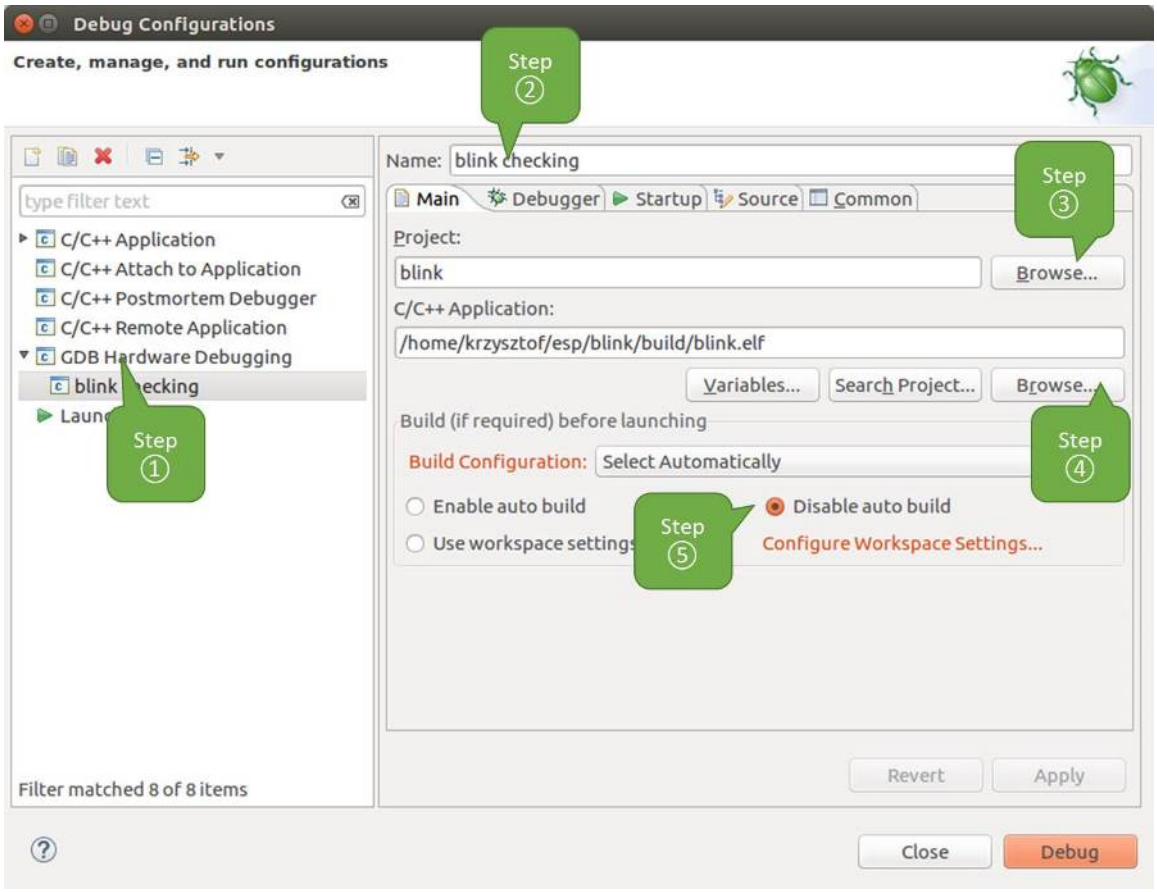

Fig. 35: Configuration of GDB Hardware Debugging - Main tab

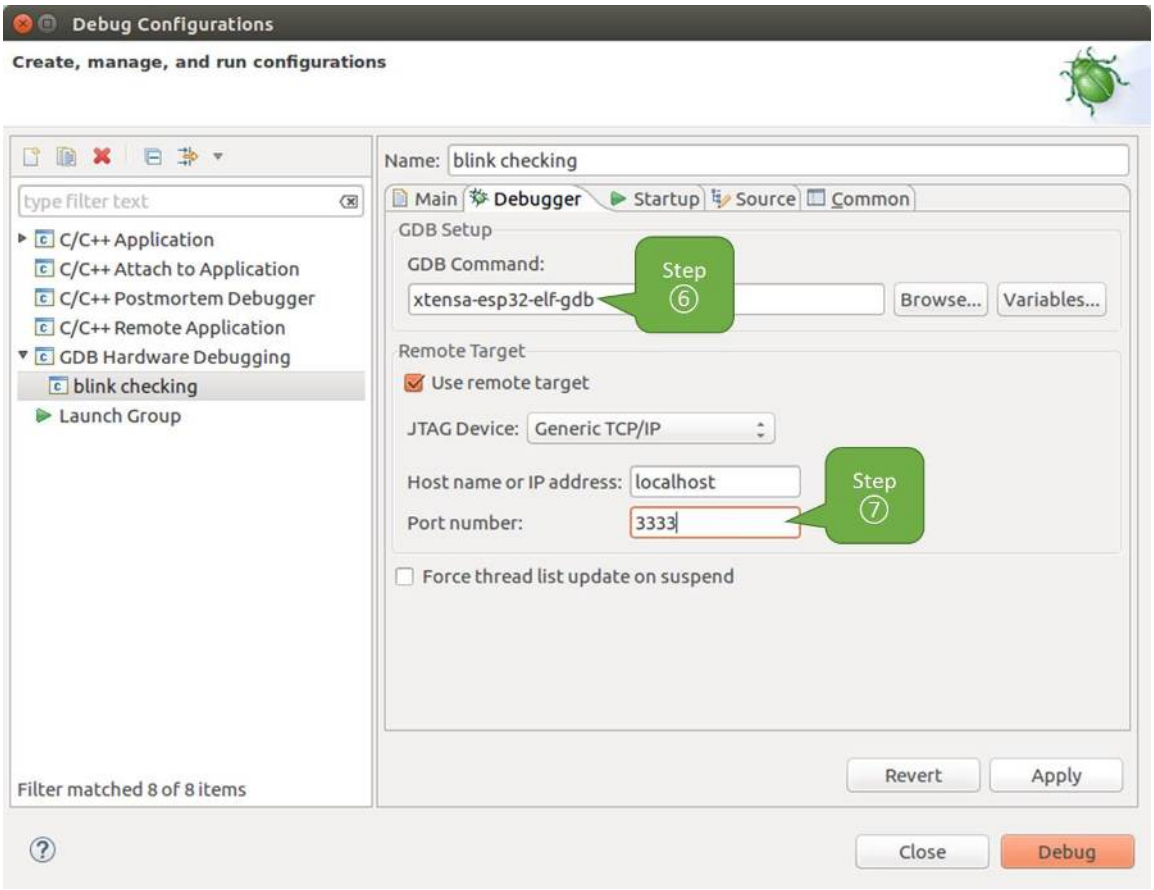

Fig. 36: Configuration of GDB Hardware Debugging - Debugger tab

```
mon reset halt
flushregs
set remote hardware-watchpoint-limit 2
```

Note: If you want to update image in the flash automatically before starting new debug session add the following lines of commands at the beginning of "Initialization Commands" textbox:

```
mon reset halt
mon program_esp ${workspace_loc:blink/build/blink.bin} 0x10000 verify
```

For description of `program_esp` command see *Upload application for debugging*.

9. Under "Load Image and Symbols" uncheck "Load image" option.
10. Further down on the same tab, establish an initial breakpoint to halt CPUs after they are reset by debugger. The plugin will set this breakpoint at the beginning of the function entered under "Set break point at:". Checkout this option and enter `app_main` in provided field.
11. Checkout "Resume" option. This will make the program to resume after `mon reset halt` is invoked per point 8. The program will then stop at breakpoint inserted at `app_main`.
    Configuration described in points 8 - 11 is shown below.

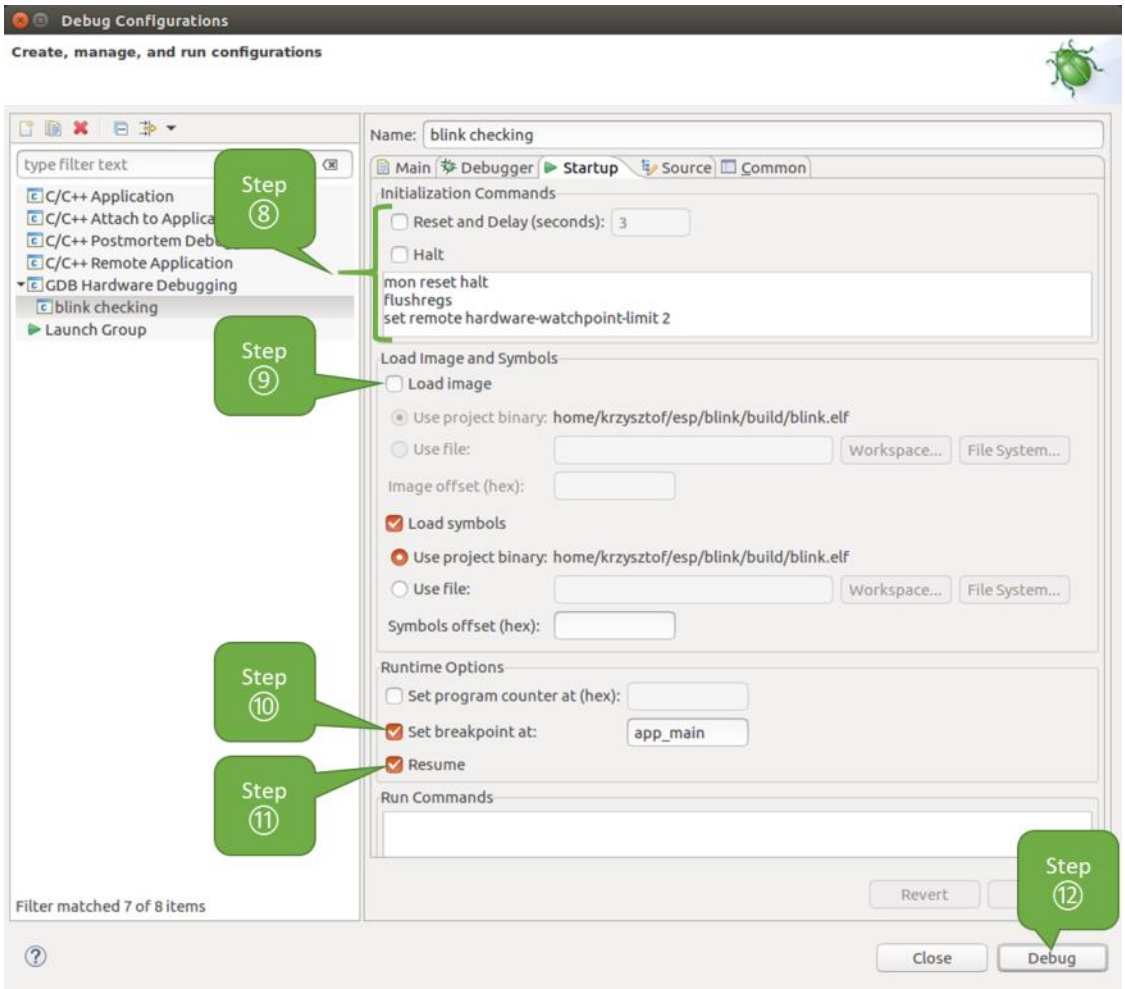

Fig. 37: Configuration of GDB Hardware Debugging - Startup tab

If the "Startup" sequence looks convoluted and respective "Initialization Commands" are not clear to you, check *What is the meaning of debugger' s startup commands?* for additional explanation.

12. If you previously completed *Configuring ESP32 Target* steps described above, so the target is running and ready to talk to debugger, go right to debugging by pressing "Debug" button. Otherwise press "Apply" to save changes, go back to *Configuring ESP32 Target* and return here to start debugging.

Once all 1 - 12 configuration steps are satisfied, the new Eclipse perspective called "Debug" will open as shown on example picture below.

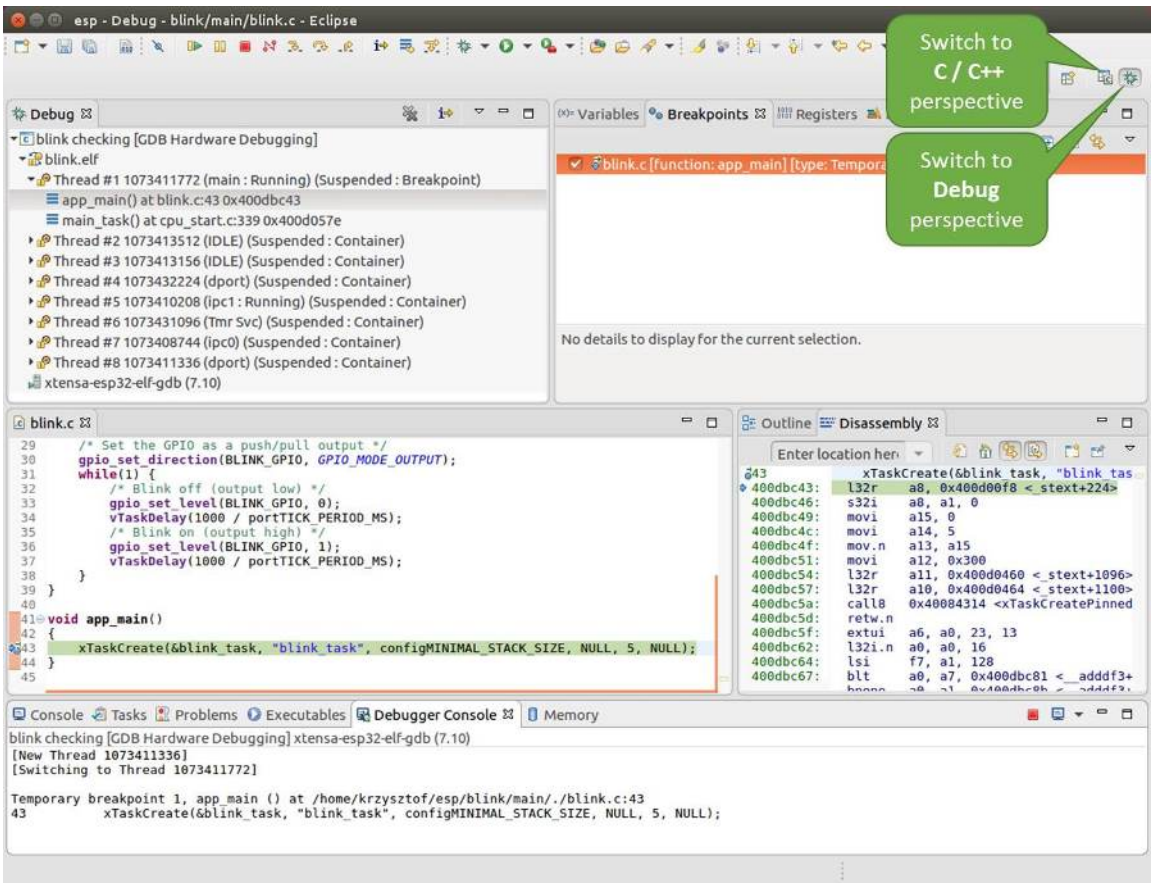

Fig. 38: Debug Perspective in Eclipse

If you are not quite sure how to use GDB, check *Eclipse* example debugging session in section *Debugging Examples*.

Command Line

1. Begin with completing steps described under *Configuring ESP32 Target*. This is prerequisite to start a debugging session.
2. Open a new terminal session and go to directory that contains project for debugging, e.g.

```
cd ~/esp/blink
```

3. When launching a debugger, you will need to provide couple of configuration parameters and commands. Instead of entering them one by one in command line, create a configuration file and name it `gdbinit`:

```
target remote :3333
set remote hardware-watchpoint-limit 2
mon reset halt
flushregs
thb app_main
c
```

   Save this file in current directory.
   For more details what's inside `gdbinit` file, see *What is the meaning of debugger's startup commands?*

4. Now you are ready to launch GDB. Type the following in terminal:

```
xtensa-esp32-elf-gdb -x gdbinit build/blink.elf
```

5. If previous steps have been done correctly, you will see a similar log concluded with `(gdb)` prompt:

```
user-name@computer-name:~/esp/blink$ xtensa-esp32-elf-gdb -x gdbinit build/
↪blink.elf
GNU gdb (crosstool-NG crosstool-ng-1.22.0-61-gab8375a) 7.10
Copyright (C) 2015 Free Software Foundation, Inc.
License GPLv3+: GNU GPL version 3 or later <http://gnu.org/licenses/gpl.html>
This is free software: you are free to change and redistribute it.
There is NO WARRANTY, to the extent permitted by law.  Type "show copying"
and "show warranty" for details.
This GDB was configured as "--host=x86_64-build_pc-linux-gnu --target=xtensa-
↪esp32-elf".
Type "show configuration" for configuration details.
For bug reporting instructions, please see:
<http://www.gnu.org/software/gdb/bugs/>.
Find the GDB manual and other documentation resources online at:
<http://www.gnu.org/software/gdb/documentation/>.
For help, type "help".
Type "apropos word" to search for commands related to "word"...
Reading symbols from build/blink.elf...done.
0x400d10d8 in esp_vApplicationIdleHook () at /home/user-name/esp/esp-idf/
↪components/esp32/./freertos_hooks.c:52
52          asm("waiti 0");
JTAG tap: esp32.cpu0 tap/device found: 0x120034e5 (mfg: 0x272 (Tensilica),␣
↪part: 0x2003, ver: 0x1)
JTAG tap: esp32.slave tap/device found: 0x120034e5 (mfg: 0x272 (Tensilica),␣
↪part: 0x2003, ver: 0x1)
esp32: Debug controller was reset (pwrstat=0x5F, after clear 0x0F).
esp32: Core was reset (pwrstat=0x5F, after clear 0x0F).
Target halted. PRO_CPU: PC=0x5000004B (active)    APP_CPU: PC=0x00000000
esp32: target state: halted
esp32: Core was reset (pwrstat=0x1F, after clear 0x0F).
Target halted. PRO_CPU: PC=0x40000400 (active)    APP_CPU: PC=0x40000400
esp32: target state: halted
Hardware assisted breakpoint 1 at 0x400db717: file /home/user-name/esp/blink/
↪main/./blink.c, line 43.
0x0:    0x00000000
Target halted. PRO_CPU: PC=0x400DB717 (active)    APP_CPU: PC=0x400D10D8
[New Thread 1073428656]
[New Thread 1073413708]
[New Thread 1073431316]
[New Thread 1073410672]
[New Thread 1073408876]
[New Thread 1073432196]
[New Thread 1073411552]
[Switching to Thread 1073411996]

Temporary breakpoint 1, app_main () at /home/user-name/esp/blink/main/./blink.
↪c:43
43      xTaskCreate(&blink_task, "blink_task", 512, NULL, 5, NULL);
(gdb)
```

Note the third line from bottom that shows debugger halting at breakpoint established in `gdbinit` file at function `app_main()`. Since the processor is halted, the LED should not be blinking. If this is what you see as well, you are ready to start debugging.

If you are not quite sure how to use GDB, check *Command Line* example debugging session in section *Debugging Examples*.

idf.py debug targets It is also possible to execute the described debugging tools conveniently from `idf.py`. These commands are supported:

1. `idf.py openocd`
   Runs OpenOCD in a console with configuration defined in the environment or via command line. It uses default script directory defined as `OPENOCD_SCRIPTS` environmental variable, which is automatically added from an Export script (`export.sh` or `export.bat`). It is possible to override the script location using command line argument `--openocd-scripts`.
   As for the JTAG configuration of the current board, please use the environmental variable `OPENOCD_COMMANDS` or `--openocd-commands` command line argument. If none of the above is defined, OpenOCD is started with `-f board/esp32-wrover-kit-3.3v.cfg` board definition.
2. `idf.py gdb`
   Starts the gdb the same way as the *Command Line*, but generates the initial gdb scripts referring to the current project elf file.
3. `idf.py gdbtui`
   The same as *2*, but starts the gdb with `tui` argument allowing very simple source code view.
4. `idf.py gdbgui`
   Starts gdbgui debugger frontend enabling out-of-the-box debugging in a browser window.
   It is possible to combine these debugging actions on a single command line allowing convenient setup of blocking and non-blocking actions in one step. `idf.py` implements a simple logic to move the background actions (such as openocd) to the beginning and the interactive ones (such as gdb, monitor) to the end of the action list. An example of a very useful combination is:

   ```
   idf.py openocd gdbgui monitor
   ```

   The above command runs OpenOCD in the background, starts gdbgui to open a browser window with active debugger frontend and opens a serial monitor in the active console.

Debugging Examples

This section describes debugging with GDB from *Eclipse* as well as from *Command Line*.

Eclipse Verify if your target is ready and loaded with get-started/blink example. Configure and start debugger following steps in section *Eclipse*. Pick up where target was left by debugger, i.e. having the application halted at breakpoint established at `app_main()`.

Examples in this section

1. *Navigating through the code, call stack and threads*
2. *Setting and clearing breakpoints*
3. *Halting the target manually*
4. *Stepping through the code*
5. *Checking and setting memory*
6. *Watching and setting program variables*
7. *Setting conditional breakpoints*

Navigating through the code, call stack and threads When the target is halted, debugger shows the list of threads in "Debug" window. The line of code where program halted is highlighted in another window below, as shown on the following picture. The LED stops blinking.

Specific thread where the program halted is expanded showing the call stack. It represents function calls that lead up to the highlighted line of code, where the target halted. The first line of call stack under Thread #1 contains the last called function `app_main()`, that in turn was called from function `main_task()` shown in a line below. Each line of the stack also contains the file name and line number where the function was called. By clicking / highlighting the stack entries, in window below, you will see contents of this file.

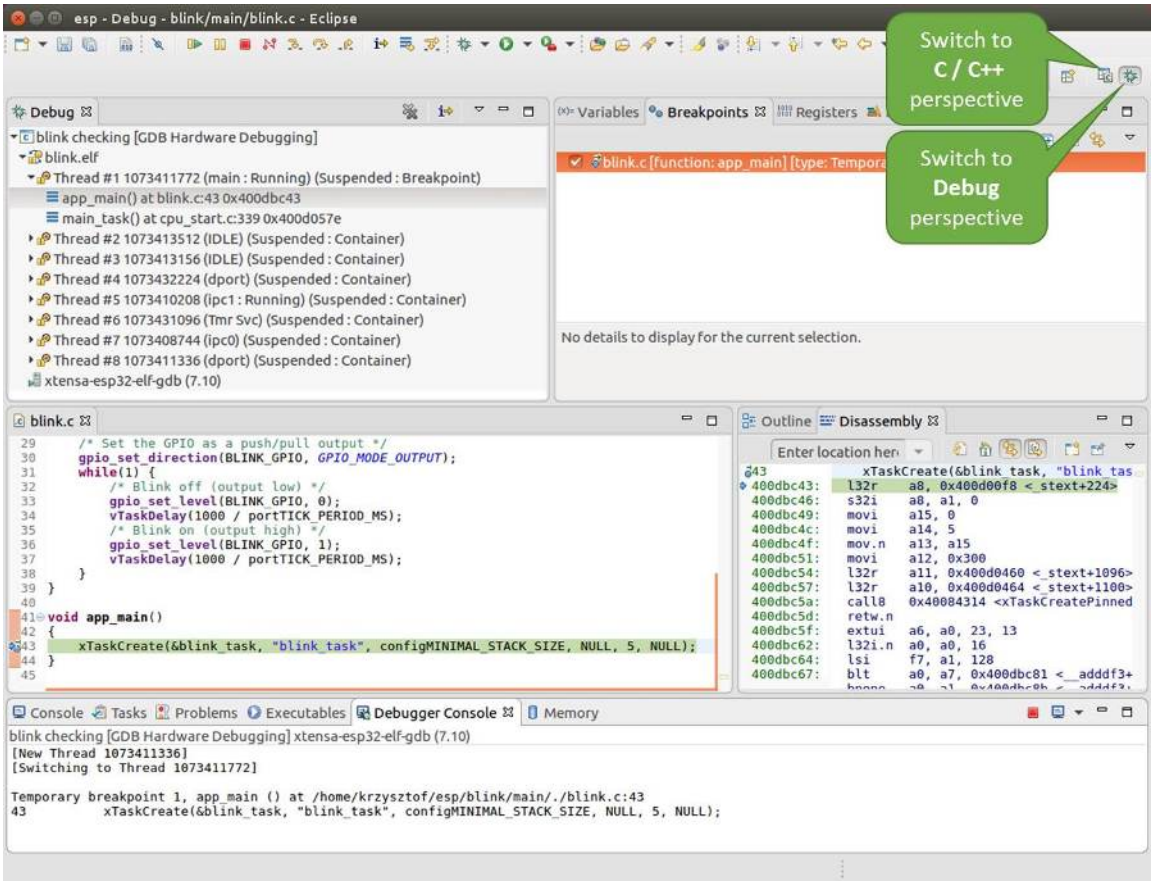

Fig. 39: Debug Perspective in Eclipse

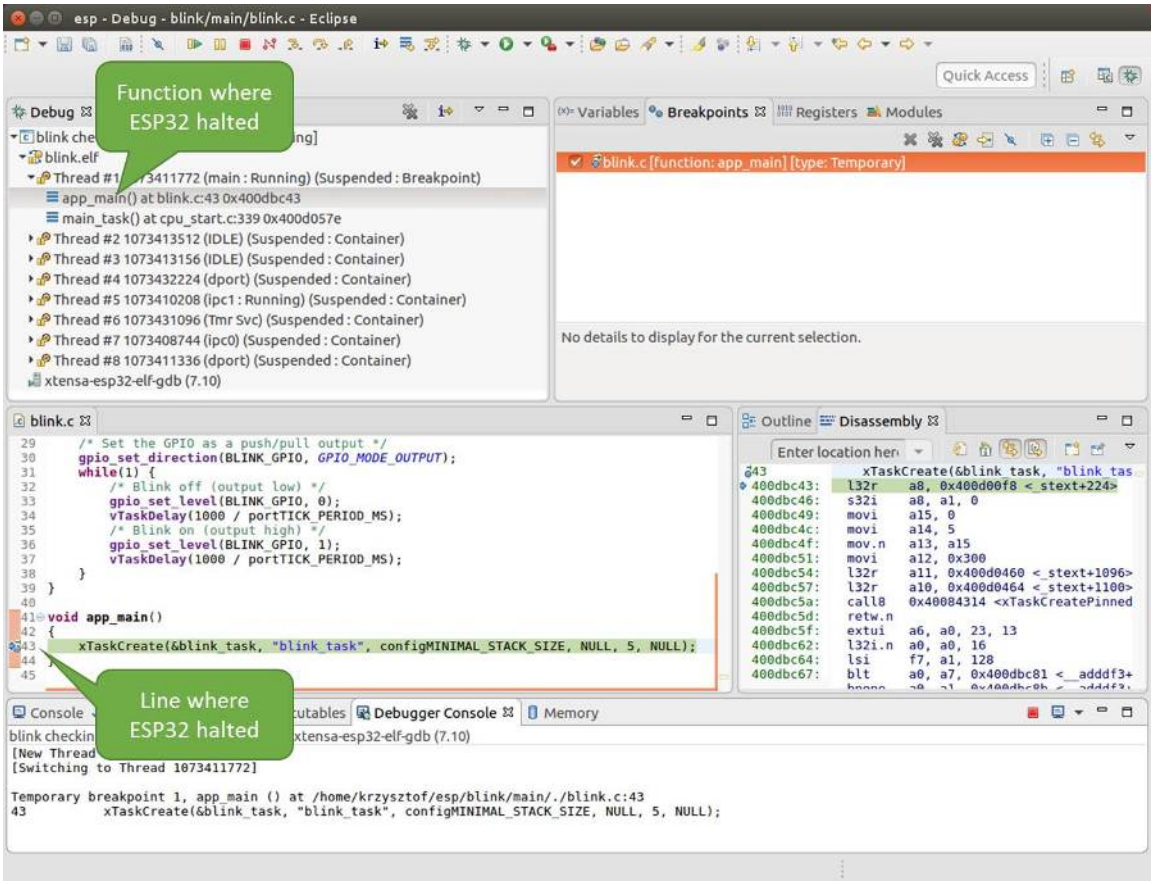

Fig. 40: Target halted during debugging

By expanding threads you can navigate throughout the application. Expand Thread #5 that contains much longer call stack. You will see there, besides function calls, numbers like `0x4000000c`. They represent addresses of binary code not provided in source form.

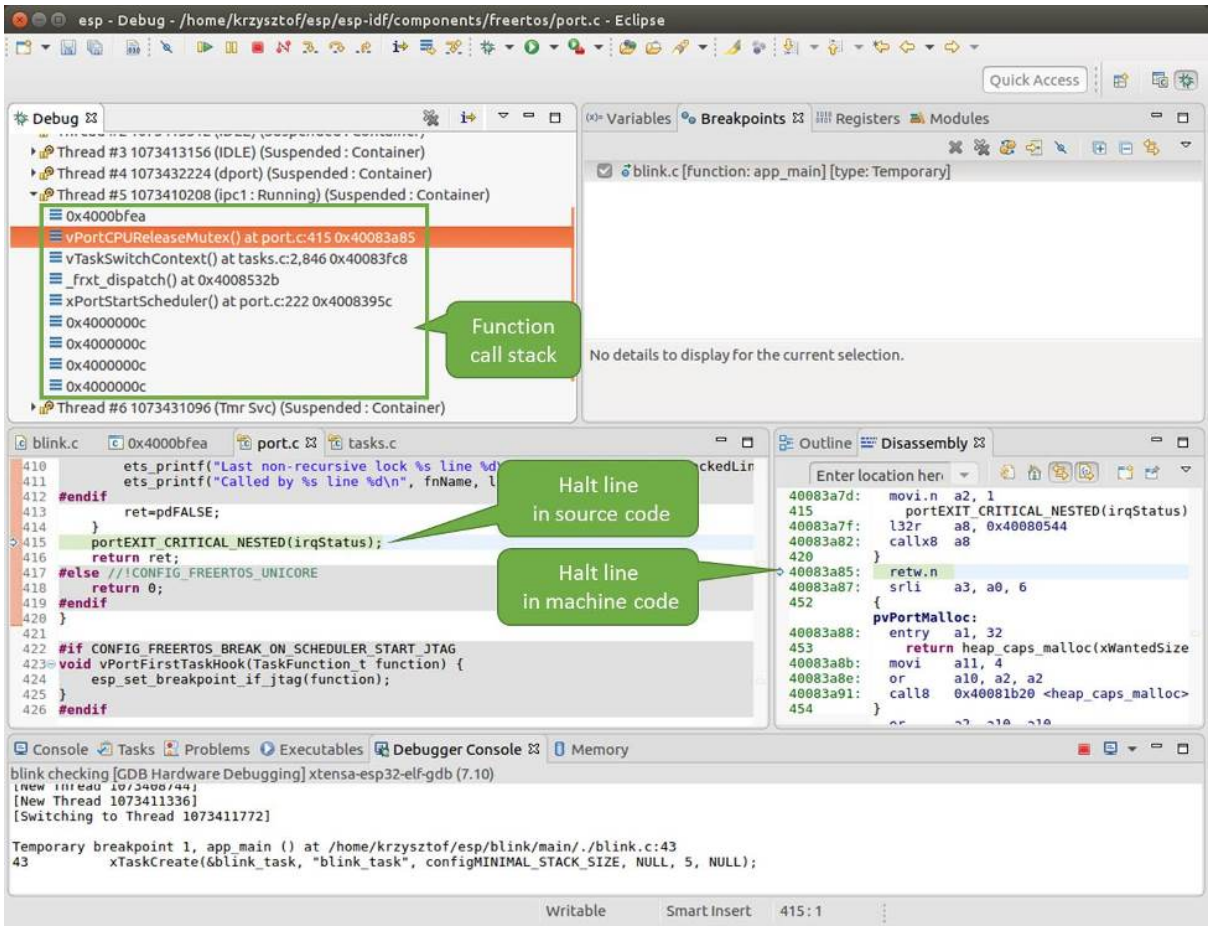

Fig. 41: Navigate through the call stack

In another window on right, you can see the disassembled machine code no matter if your project provides it in source or only the binary form.

Go back to the `app_main()` in Thread #1 to familiar code of `blink.c` file that will be examined in more details in the following examples. Debugger makes it easy to navigate through the code of entire application. This comes handy when stepping through the code and working with breakpoints and will be discussed below.

Setting and clearing breakpoints When debugging, we would like to be able to stop the application at critical lines of code and then examine the state of specific variables, memory and registers / peripherals. To do so we are using breakpoints. They provide a convenient way to quickly get to and halt the application at specific line.

Let's establish two breakpoints when the state of LED changes. Basing on code listing above, this happens at lines 33 and 36. To do so, hold the "Control" on the keyboard and double clink on number `33` in file `blink.c` file. A dialog will open where you can confirm your selection by pressing "OK" button. If you do not like to see the dialog just double click the line number. Set another breakpoint in line 36.

Information how many breakpoints are set and where is shown in window "Breakpoints" on top right. Click "Show Breakpoints Supported by Selected Target" to refresh this list. Besides the two just set breakpoints the list may contain temporary breakpoint at function `app_main()` established at debugger start. As maximum two breakpoints are allowed (see *Breakpoints and watchpoints available*), you need to delete it, or debugging will fail.

If you now click "Resume" (click `blink_task()` under "Tread #8", if "Resume" button is grayed out), the processor will run and halt at a breakpoint. Clicking "Resume" another time will make it run again, halt on second breakpoint, and so on.

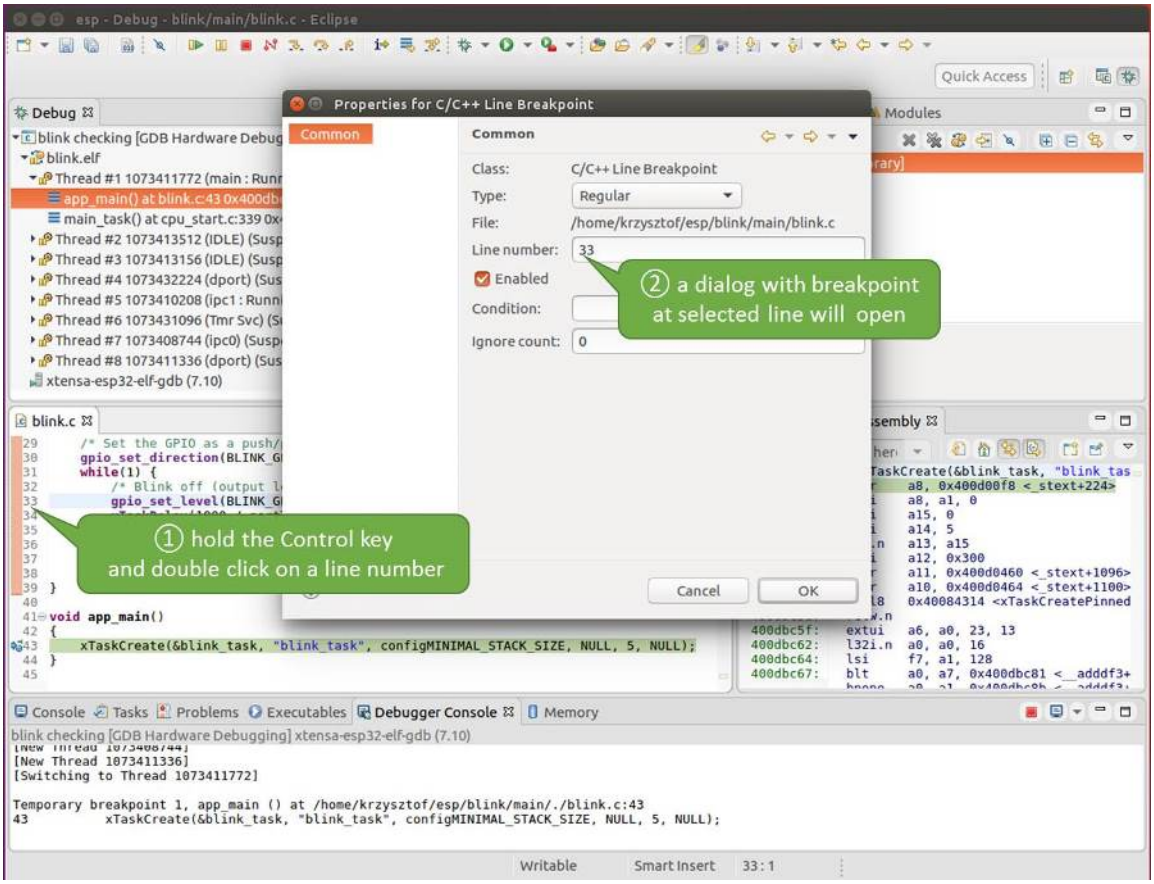

Fig. 42: Setting a breakpoint

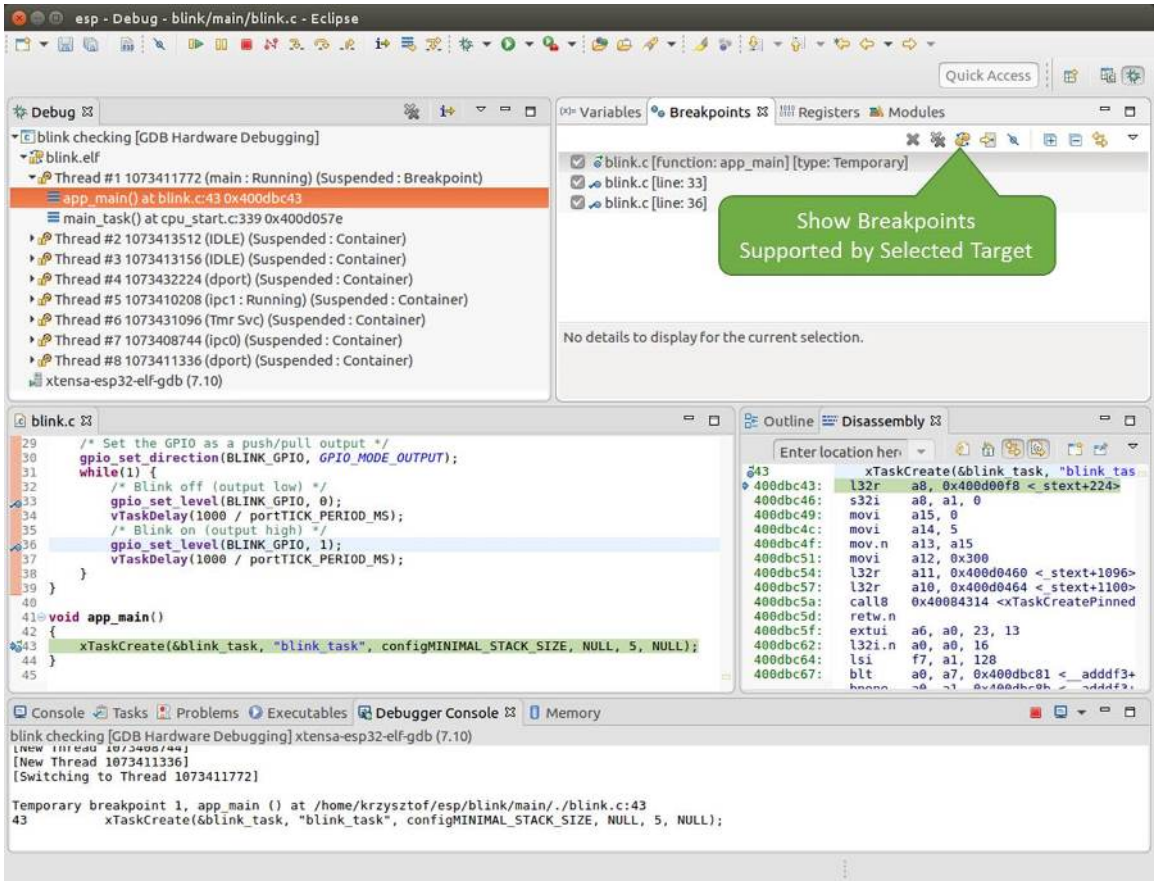

Fig. 43: Three breakpoints are set / maximum two are allowed

You will be also able to see that LED is changing the state after each click to "Resume" program execution.

Read more about breakpoints under *Breakpoints and watchpoints available* and *What else should I know about breakpoints?*

Halting the target manually When debugging, you may resume application and enter code waiting for some event or staying in infinite loop without any break points defined. In such case, to go back to debugging mode, you can break program execution manually by pressing "Suspend" button.

To check it, delete all breakpoints and click "Resume". Then click "Suspend". Application will be halted at some random point and LED will stop blinking. Debugger will expand tread and highlight the line of code where application halted.

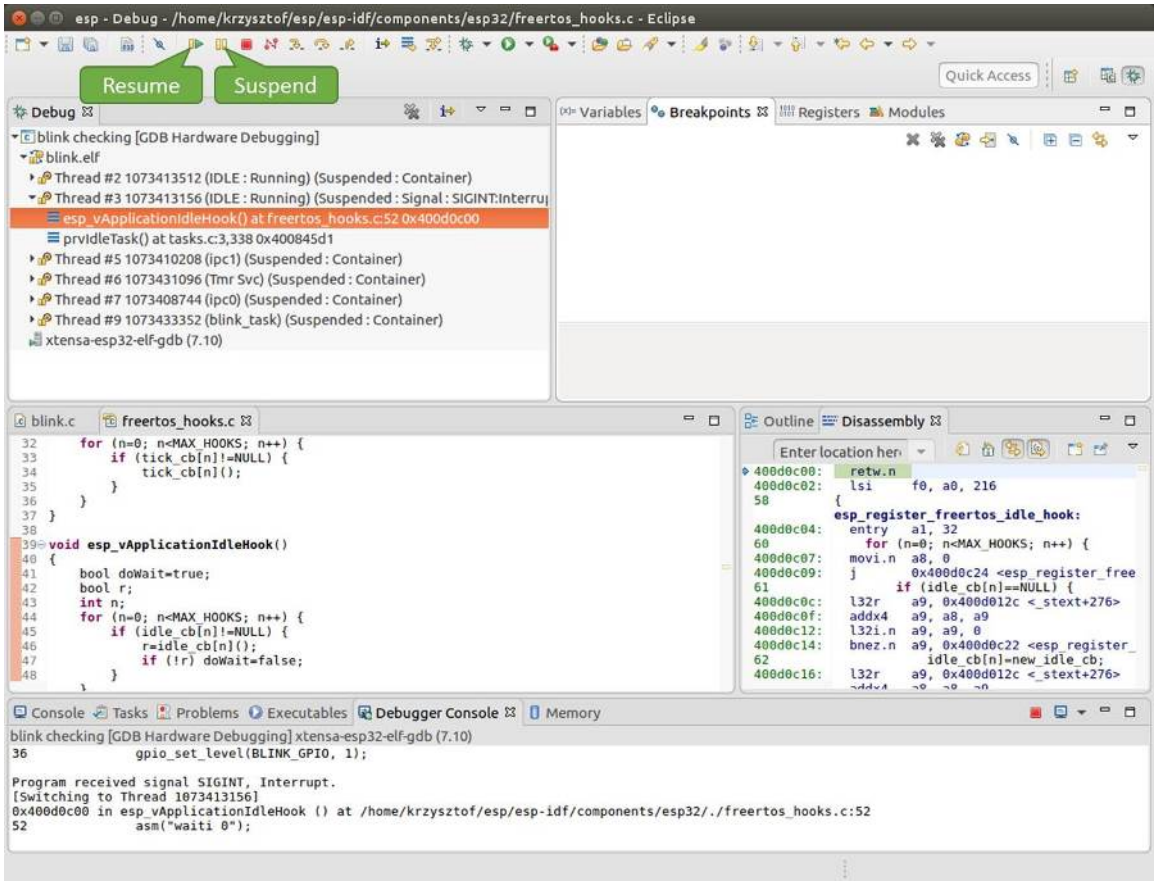

Fig. 44: Target halted manually

In particular case above, the application has been halted in line 52 of code in file `freertos_hooks.c` Now you can resume it again by pressing "Resume" button or do some debugging as discussed below.

Stepping through the code It is also possible to step through the code using "Step Into (F5)" and "Step Over (F6)" commands. The difference is that "Step Into (F5)" is entering inside subroutines calls, while "Step Over (F6)" steps over the call, treating it as a single source line.

Before being able to demonstrate this functionality, using information discussed in previous paragraph, make sure that you have only one breakpoint defined at line `36` of `blink.c`.

Resume program by entering pressing F8 and let it halt. Now press "Step Over (F6)", one by one couple of times, to see how debugger is stepping one program line at a time.

If you press "Step Into (F5)" instead, then debugger will step inside subroutine calls.

In this particular case debugger stepped inside `gpio_set_level(BLINK_GPIO, 0)` and effectively moved to `gpio.c` driver code.

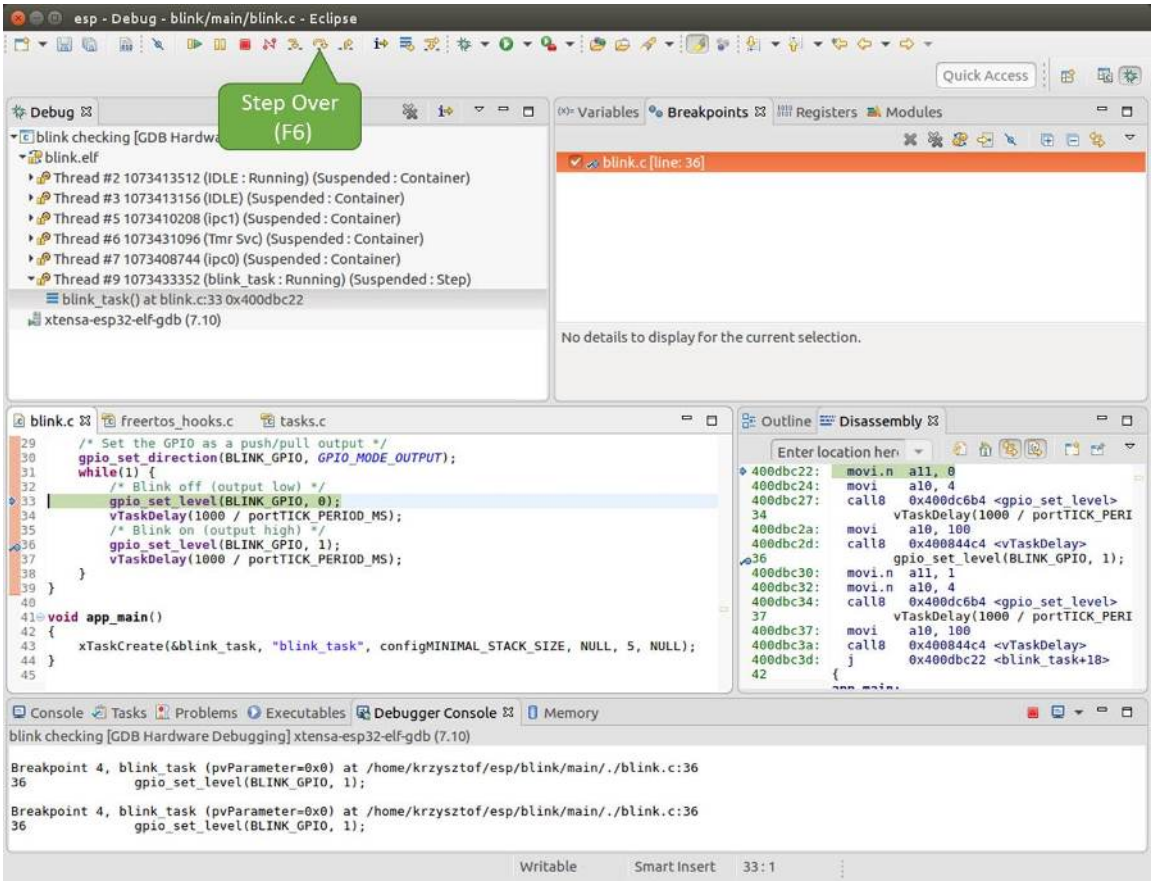

Fig. 45: Stepping through the code with "Step Over (F6)"

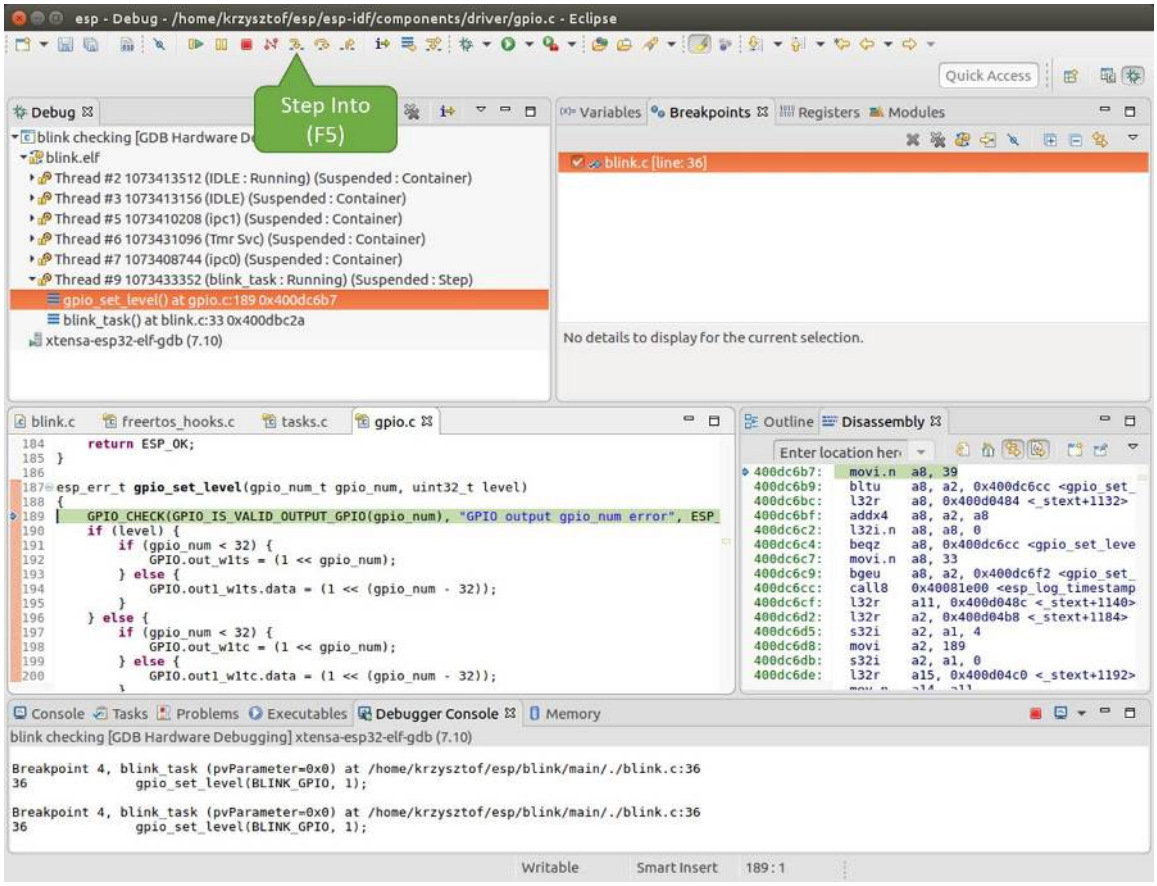

Fig. 46: Stepping through the code with "Step Into (F5)"

See *Why stepping with "next" does not bypass subroutine calls?* for potential limitation of using `next` command.

Checking and setting memory To display or set contents of memory use "Memory" tab at the bottom of "Debug" perspective.

With the "Memory" tab, we will read from and write to the memory location `0x3FF44004` labeled as `GPIO_OUT_REG` used to set and clear individual GPIO's.

For more information, see *ESP32 Technical Reference Manual > IO MUX and GPIO Matrix (GPIO, IO_MUX)* [PDF].

Being in the same `blink.c` project as before, set two breakpoints right after `gpio_set_level` instruction. Click "Memory" tab and then "Add Memory Monitor" button. Enter `0x3FF44004` in provided dialog.

Now resume program by pressing F8 and observe "Monitor" tab.

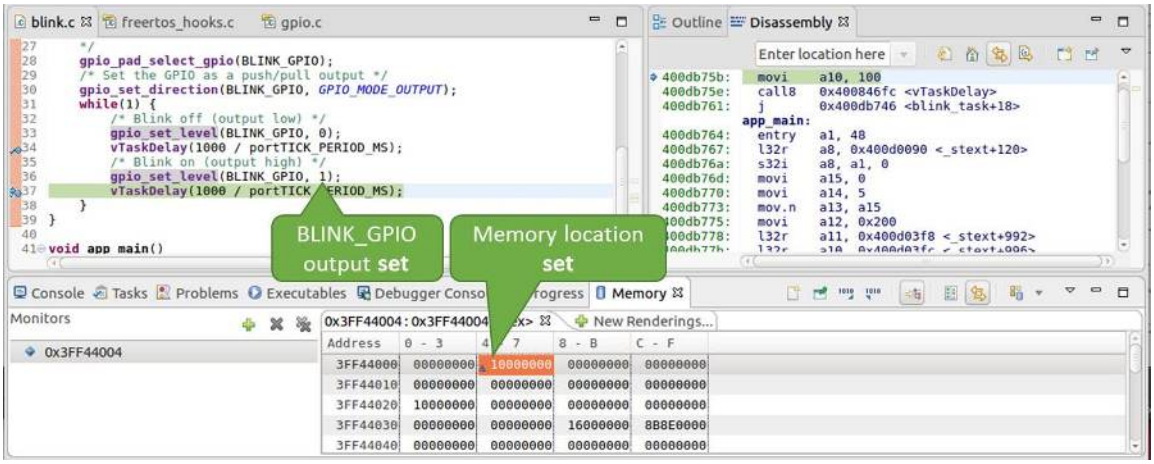

Fig. 47: Observing memory location 0x3FF44004 changing one bit to "ON"

You should see one bit being flipped over at memory location `0x3FF44004` (and LED changing the state) each time F8 is pressed.

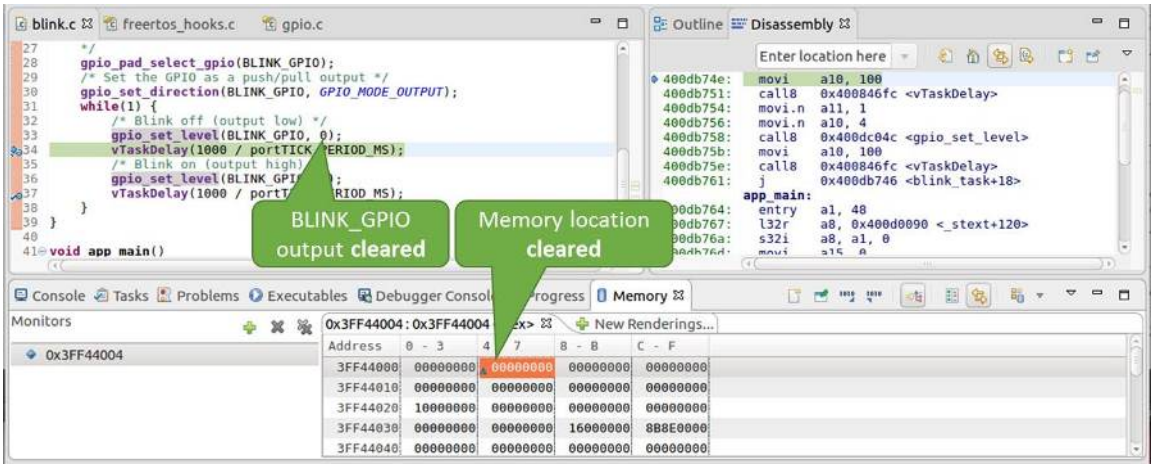

Fig. 48: Observing memory location 0x3FF44004 changing one bit to "OFF"

To set memory use the same "Monitor" tab and the same memory location. Type in alternate bit pattern as previously observed. Immediately after pressing enter you will see LED changing the state.

Watching and setting program variables A common debugging tasks is checking the value of a program variable as the program runs. To be able to demonstrate this functionality, update file `blink.c` by adding a declaration of

a global variable `int i` above definition of function `blink_task`. Then add `i++` inside `while(1)` of this function to get `i` incremented on each blink.

Exit debugger, so it is not confused with new code, build and flash the code to the ESP and restart debugger. There is no need to restart OpenOCD.

Once application is halted, enter a breakpoint in the line where you put `i++`.

In next step, in the window with "Breakpoints", click the "Expressions" tab. If this tab is not visible, then add it by going to the top menu Window > Show View > Expressions. Then click "Add new expression" and enter `i`.

Resume program execution by pressing F8. Each time the program is halted you will see `i` value being incremented.

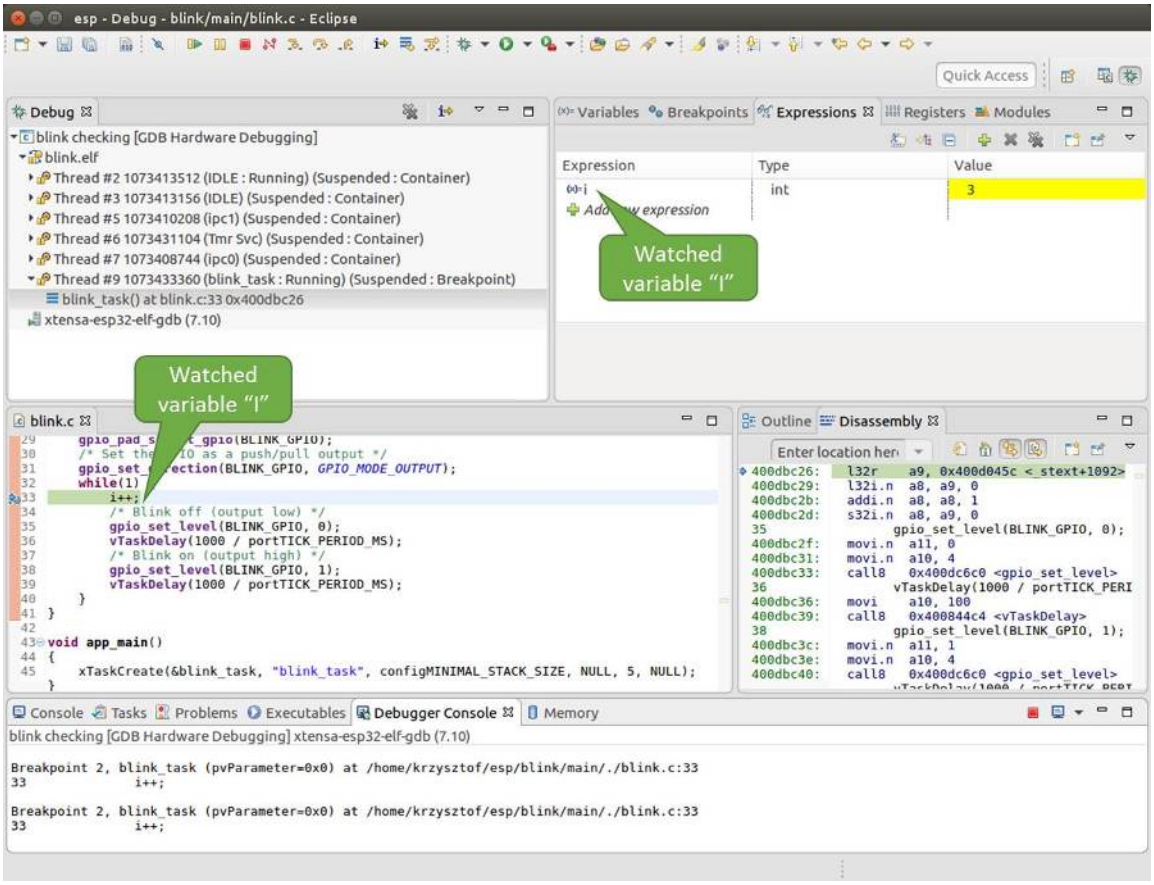

Fig. 49: Watching program variable "i"

To modify `i` enter a new number in "Value" column. After pressing "Resume (F8)" the program will keep incrementing `i` starting from the new entered number.

Setting conditional breakpoints Here comes more interesting part. You may set a breakpoint to halt the program execution, if certain condition is satisfied. Right click on the breakpoint to open a context menu and select "Breakpoint Properties". Change the selection under "Type:" to "Hardware" and enter a "Condition:" like `i == 2`.

If current value of `i` is less than `2` (change it if required) and program is resumed, it will blink LED in a loop until condition `i == 2` gets true and then finally halt.

Command Line Verify if your target is ready and loaded with get-started/blink example. Configure and start debugger following steps in section *Command Line*. Pick up where target was left by debugger, i.e. having the application halted at breakpoint established at `app_main()`:

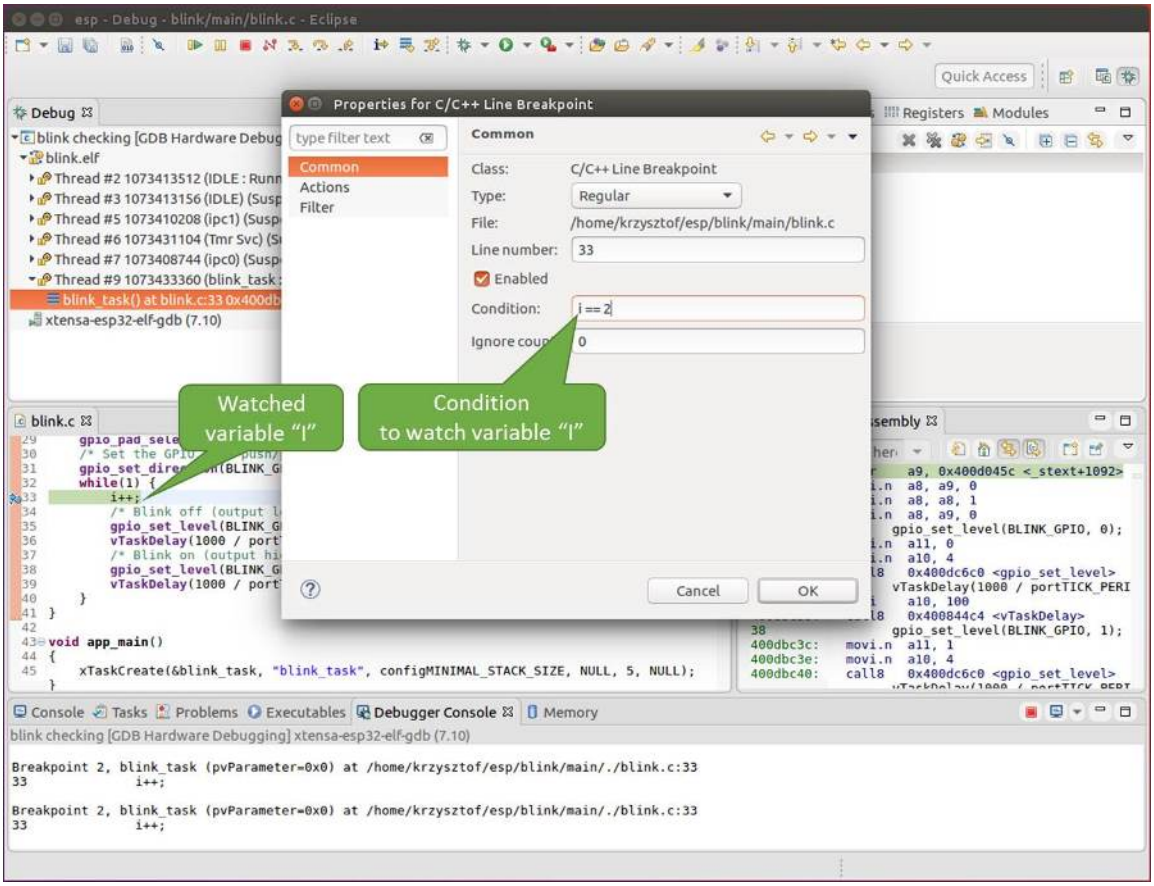

Fig. 50: Setting a conditional breakpoint

```
Temporary breakpoint 1, app_main () at /home/user-name/esp/blink/main/./blink.c:43
43      xTaskCreate(&blink_task, "blink_task", configMINIMAL_STACK_SIZE, NULL, 5,␣
↪NULL);
(gdb)
```

Examples in this section

1. *Navigating through the code, call stack and threads*
2. *Setting and clearing breakpoints*
3. *Halting and resuming the application*
4. *Stepping through the code*
5. *Checking and setting memory*
6. *Watching and setting program variables*
7. *Setting conditional breakpoints*

Navigating through the code, call stack and threads When you see the `(gdb)` prompt, the application is halted. LED should not be blinking.

To find out where exactly the code is halted, enter `l` or `list`, and debugger will show couple of lines of code around the halt point (line 43 of code in file `blink.c`)

```
(gdb) l
38      }
39  }
40
41  void app_main()
42  {
43      xTaskCreate(&blink_task, "blink_task", configMINIMAL_STACK_SIZE, NULL, 5,␣
↪NULL);
44  }
(gdb)
```

Check how code listing works by entering, e.g. `l 30, 40` to see particular range of lines of code.

You can use `bt` or `backtrace` to see what function calls lead up to this code:

```
(gdb) bt
#0  app_main () at /home/user-name/esp/blink/main/./blink.c:43
#1  0x400d057e in main_task (args=0x0) at /home/user-name/esp/esp-idf/components/
↪esp32/./cpu_start.c:339
(gdb)
```

Line #0 of output provides the last function call before the application halted, i.e. `app_main ()` we have listed previously. The `app_main ()` was in turn called by function `main_task` from line 339 of code located in file `cpu_start.c`.

To get to the context of `main_task` in file `cpu_start.c`, enter `frame N`, where N = 1, because the `main_task` is listed under #1):

```
(gdb) frame 1
#1  0x400d057e in main_task (args=0x0) at /home/user-name/esp/esp-idf/components/
↪esp32/./cpu_start.c:339
339     app_main();
(gdb)
```

Enter `l` and this will reveal the piece of code that called `app_main()` (in line 339):

```
(gdb) l
334         ;
335     }
```

(continues on next page)

(continued from previous page)

```
336 #endif
337     //Enable allocation in region where the startup stacks were located.
338     heap_caps_enable_nonos_stack_heaps();
339     app_main();
340     vTaskDelete(NULL);
341 }
342
(gdb)
```

By listing some lines before, you will see the function name `main_task` we have been looking for:

```
(gdb) l 326, 341
326 static void main_task(void* args)
327 {
328     // Now that the application is about to start, disable boot watchdogs
329     REG_CLR_BIT(TIMG_WDTCONFIG0_REG(0), TIMG_WDT_FLASHBOOT_MOD_EN_S);
330     REG_CLR_BIT(RTC_CNTL_WDTCONFIG0_REG, RTC_CNTL_WDT_FLASHBOOT_MOD_EN);
331 #if !CONFIG_FREERTOS_UNICORE
332     // Wait for FreeRTOS initialization to finish on APP CPU, before replacing␣
↪its startup stack
333     while (port_xSchedulerRunning[1] == 0) {
334         ;
335     }
336 #endif
337     //Enable allocation in region where the startup stacks were located.
338     heap_caps_enable_nonos_stack_heaps();
339     app_main();
340     vTaskDelete(NULL);
341 }
(gdb)
```

To see the other code, enter `i threads`. This will show the list of threads running on target:

```
(gdb) i threads
  Id   Target Id         Frame
  8    Thread 1073411336 (dport) 0x400d0848 in dport_access_init_core (arg=
↪<optimized out>)
    at /home/user-name/esp/esp-idf/components/esp32/./dport_access.c:170
  7    Thread 1073408744 (ipc0) xQueueGenericReceive (xQueue=0x3ffae694,␣
↪pvBuffer=0x0, xTicksToWait=1644638200,
    xJustPeeking=0) at /home/user-name/esp/esp-idf/components/freertos/./queue.
↪c:1452
  6    Thread 1073431096 (Tmr Svc) prvTimerTask (pvParameters=0x0)
    at /home/user-name/esp/esp-idf/components/freertos/./timers.c:445
  5    Thread 1073410208 (ipc1 : Running) 0x4000bfea in ?? ()
  4    Thread 1073432224 (dport) dport_access_init_core (arg=0x0)
    at /home/user-name/esp/esp-idf/components/esp32/./dport_access.c:150
  3    Thread 1073413156 (IDLE) prvIdleTask (pvParameters=0x0)
    at /home/user-name/esp/esp-idf/components/freertos/./tasks.c:3282
  2    Thread 1073413512 (IDLE) prvIdleTask (pvParameters=0x0)
    at /home/user-name/esp/esp-idf/components/freertos/./tasks.c:3282
* 1    Thread 1073411772 (main : Running) app_main () at /home/user-name/esp/blink/
↪main/./blink.c:43
(gdb)
```

The thread list shows the last function calls per each thread together with the name of C source file if available.

You can navigate to specific thread by entering `thread N`, where `N` is the thread Id. To see how it works go to thread thread 5:

```
(gdb) thread 5
```

(continues on next page)

(continued from previous page)

```
[Switching to thread 5 (Thread 1073410208)]
#0  0x4000bfea in ?? ()
(gdb)
```

Then check the backtrace:

```
(gdb) bt
#0  0x4000bfea in ?? ()
#1  0x40083a85 in vPortCPUReleaseMutex (mux=<optimized out>) at /home/user-name/
↪esp/esp-idf/components/freertos/./port.c:415
#2  0x40083fc8 in vTaskSwitchContext () at /home/user-name/esp/esp-idf/components/
↪freertos/./tasks.c:2846
#3  0x4008532b in _frxt_dispatch ()
#4  0x4008395c in xPortStartScheduler () at /home/user-name/esp/esp-idf/components/
↪freertos/./port.c:222
#5  0x4000000c in ?? ()
#6  0x4000000c in ?? ()
#7  0x4000000c in ?? ()
#8  0x4000000c in ?? ()
(gdb)
```

As you see, the backtrace may contain several entries. This will let you check what exact sequence of function calls lead to the code where the target halted. Question marks `??` instead of a function name indicate that application is available only in binary format, without any source file in C language. The value like `0x4000bfea` is the memory address of the function call.

Using `bt`, `i threads`, `thread N` and `list` commands we are now able to navigate through the code of entire application. This comes handy when stepping through the code and working with breakpoints and will be discussed below.

Setting and clearing breakpoints When debugging, we would like to be able to stop the application at critical lines of code and then examine the state of specific variables, memory and registers / peripherals. To do so we are using breakpoints. They provide a convenient way to quickly get to and halt the application at specific line.

Let's establish two breakpoints when the state of LED changes. Basing on code listing above this happens at lines 33 and 36. Breakpoints may be established using command `break M` where M is the code line number:

```
(gdb) break 33
Breakpoint 2 at 0x400db6f6: file /home/user-name/esp/blink/main/./blink.c, line 33.
(gdb) break 36
Breakpoint 3 at 0x400db704: file /home/user-name/esp/blink/main/./blink.c, line 36.
```

If you new enter `c`, the processor will run and halt at a breakpoint. Entering `c` another time will make it run again, halt on second breakpoint, and so on:

```
(gdb) c
Continuing.
Target halted. PRO_CPU: PC=0x400DB6F6 (active)    APP_CPU: PC=0x400D10D8

Breakpoint 2, blink_task (pvParameter=0x0) at /home/user-name/esp/blink/main/./
↪blink.c:33
33          gpio_set_level(BLINK_GPIO, 0);
(gdb) c
Continuing.
Target halted. PRO_CPU: PC=0x400DB6F8 (active)    APP_CPU: PC=0x400D10D8
Target halted. PRO_CPU: PC=0x400DB704 (active)    APP_CPU: PC=0x400D10D8

Breakpoint 3, blink_task (pvParameter=0x0) at /home/user-name/esp/blink/main/./
↪blink.c:36
36          gpio_set_level(BLINK_GPIO, 1);
```

(continues on next page)

(continued from previous page)

```
(gdb)
```

You will be also able to see that LED is changing the state only if you resume program execution by entering `c`.

To examine how many breakpoints are set and where, use command `info break`:

```
(gdb) info break
Num     Type           Disp Enb Address    What
2       breakpoint     keep y   0x400db6f6 in blink_task at /home/user-name/esp/
↪blink/main/./blink.c:33
    breakpoint already hit 1 time
3       breakpoint     keep y   0x400db704 in blink_task at /home/user-name/esp/
↪blink/main/./blink.c:36
    breakpoint already hit 1 time
(gdb)
```

Please note that breakpoint numbers (listed under `Num`) start with `2`. This is because first breakpoint has been already established at function `app_main()` by running command `thb app_main` on debugger launch. As it was a temporary breakpoint, it has been automatically deleted and now is not listed anymore.

To remove breakpoints enter `delete N` command (in short `d N`), where `N` is the breakpoint number:

```
(gdb) delete 1
No breakpoint number 1.
(gdb) delete 2
(gdb)
```

Read more about breakpoints under *Breakpoints and watchpoints available* and *What else should I know about breakpoints?*

Halting and resuming the application When debugging, you may resume application and enter code waiting for some event or staying in infinite loop without any break points defined. In such case, to go back to debugging mode, you can break program execution manually by entering Ctrl+C.

To check it delete all breakpoints and enter `c` to resume application. Then enter Ctrl+C. Application will be halted at some random point and LED will stop blinking. Debugger will print the following:

```
(gdb) c
Continuing.
^CTarget halted. PRO_CPU: PC=0x400D0C00             APP_CPU: PC=0x400D0C00 (active)
[New Thread 1073433352]

Program received signal SIGINT, Interrupt.
[Switching to Thread 1073413512]
0x400d0c00 in esp_vApplicationIdleHook () at /home/user-name/esp/esp-idf/
↪components/esp32/./freertos_hooks.c:52
52          asm("waiti 0");
(gdb)
```

In particular case above, the application has been halted in line 52 of code in file `freertos_hooks.c`. Now you can resume it again by enter `c` or do some debugging as discussed below.

Note: In MSYS2 shell Ctrl+C does not halt the target but exists debugger. To resolve this issue consider debugging with *Eclipse* or check a workaround under http://www.mingw.org/wiki/Workaround_for_GDB_Ctrl_C_Interrupt.

Stepping through the code It is also possible to step through the code using `step` and `next` commands (in short `s` and `n`). The difference is that `step` is entering inside subroutines calls, while `next` steps over the call, treating it as a single source line.

To demonstrate this functionality, using command `break` and `delete` discussed in previous paragraph, make sure that you have only one breakpoint defined at line `36` of `blink.c`:

```
(gdb) info break
Num     Type           Disp Enb Address    What
3       breakpoint     keep y   0x400db704 in blink_task at /home/user-name/esp/
↪blink/main/./blink.c:36
    breakpoint already hit 1 time
(gdb)
```

Resume program by entering `c` and let it halt:

```
(gdb) c
Continuing.
Target halted. PRO_CPU: PC=0x400DB754 (active)    APP_CPU: PC=0x400D1128

Breakpoint 3, blink_task (pvParameter=0x0) at /home/user-name/esp/blink/main/./
↪blink.c:36
36          gpio_set_level(BLINK_GPIO, 1);
(gdb)
```

Then enter `n` couple of times to see how debugger is stepping one program line at a time:

```
(gdb) n
Target halted. PRO_CPU: PC=0x400DB756 (active)    APP_CPU: PC=0x400D1128
Target halted. PRO_CPU: PC=0x400DB758 (active)    APP_CPU: PC=0x400D1128
Target halted. PRO_CPU: PC=0x400DC04C (active)    APP_CPU: PC=0x400D1128
Target halted. PRO_CPU: PC=0x400DB75B (active)    APP_CPU: PC=0x400D1128
37          vTaskDelay(1000 / portTICK_PERIOD_MS);
(gdb) n
Target halted. PRO_CPU: PC=0x400DB75E (active)    APP_CPU: PC=0x400D1128
Target halted. PRO_CPU: PC=0x400846FC (active)    APP_CPU: PC=0x400D1128
Target halted. PRO_CPU: PC=0x400DB761 (active)    APP_CPU: PC=0x400D1128
Target halted. PRO_CPU: PC=0x400DB746 (active)    APP_CPU: PC=0x400D1128
33          gpio_set_level(BLINK_GPIO, 0);
(gdb)
```

If you enter `s` instead, then debugger will step inside subroutine calls:

```
(gdb) s
Target halted. PRO_CPU: PC=0x400DB748 (active)    APP_CPU: PC=0x400D1128
Target halted. PRO_CPU: PC=0x400DB74B (active)    APP_CPU: PC=0x400D1128
Target halted. PRO_CPU: PC=0x400DC04C (active)    APP_CPU: PC=0x400D1128
Target halted. PRO_CPU: PC=0x400DC04F (active)    APP_CPU: PC=0x400D1128
gpio_set_level (gpio_num=GPIO_NUM_4, level=0) at /home/user-name/esp/esp-idf/
↪components/driver/./gpio.c:183
183     GPIO_CHECK(GPIO_IS_VALID_OUTPUT_GPIO(gpio_num), "GPIO output gpio_num error
↪", ESP_ERR_INVALID_ARG);
(gdb)
```

In this particular case debugger stepped inside `gpio_set_level(BLINK_GPIO, 0)` and effectively moved to `gpio.c` driver code.

See *Why stepping with "next" does not bypass subroutine calls?* for potential limitation of using `next` command.

Checking and setting memory Displaying the contents of memory is done with command `x`. With additional parameters you may vary the format and count of memory locations displayed. Run `help x` to see more details. Companion command to `x` is `set` that let you write values to the memory.

We will demonstrate how `x` and `set` work by reading from and writing to the memory location `0x3FF44004` labeled as `GPIO_OUT_REG` used to set and clear individual GPIO's.

For more information, see *ESP32 Technical Reference Manual > IO MUX and GPIO Matrix (GPIO, IO_MUX)* [PDF].

Being in the same `blink.c` project as before, set two breakpoints right after `gpio_set_level` instruction. Enter two times `c` to get to the break point followed by `x /1wx 0x3FF44004` to display contents of `GPIO_OUT_REG` memory location:

```
(gdb) c
Continuing.
Target halted. PRO_CPU: PC=0x400DB75E (active)    APP_CPU: PC=0x400D1128
Target halted. PRO_CPU: PC=0x400DB74E (active)    APP_CPU: PC=0x400D1128

Breakpoint 2, blink_task (pvParameter=0x0) at /home/user-name/esp/blink/main/./
↪blink.c:34
34          vTaskDelay(1000 / portTICK_PERIOD_MS);
(gdb) x /1wx 0x3FF44004
0x3ff44004: 0x00000000
(gdb) c
Continuing.
Target halted. PRO_CPU: PC=0x400DB751 (active)    APP_CPU: PC=0x400D1128
Target halted. PRO_CPU: PC=0x400DB75B (active)    APP_CPU: PC=0x400D1128

Breakpoint 3, blink_task (pvParameter=0x0) at /home/user-name/esp/blink/main/./
↪blink.c:37
37          vTaskDelay(1000 / portTICK_PERIOD_MS);
(gdb) x /1wx 0x3FF44004
0x3ff44004: 0x00000010
(gdb)
```

If your are blinking LED connected to GPIO4, then you should see fourth bit being flipped each time the LED changes the state:

```
0x3ff44004: 0x00000000
...
0x3ff44004: 0x00000010
```

Now, when the LED is off, that corresponds to `0x3ff44004: 0x00000000` being displayed, try using `set` command to set this bit by writting `0x00000010` to the same memory location:

```
(gdb) x /1wx 0x3FF44004
0x3ff44004: 0x00000000
(gdb) set {unsigned int}0x3FF44004=0x000010
```

You should see the LED to turn on immediately after entering `set {unsigned int}0x3FF44004=0x000010` command.

Watching and setting program variables A common debugging tasks is checking the value of a program variable as the program runs. To be able to demonstrate this functionality, update file `blink.c` by adding a declaration of a global variable `int i` above definition of function `blink_task`. Then add `i++` inside `while(1)` of this function to get `i` incremented on each blink.

Exit debugger, so it is not confused with new code, build and flash the code to the ESP and restart debugger. There is no need to restart OpenOCD.

Once application is halted, enter the command `watch i`:

```
(gdb) watch i
Hardware watchpoint 2: i
(gdb)
```

This will insert so called "watchpoint" in each place of code where variable `i` is being modified. Now enter `continue` to resume the application and observe it being halted:

```
(gdb) c
Continuing.
Target halted. PRO_CPU: PC=0x400DB751 (active)    APP_CPU: PC=0x400D0811
[New Thread 1073432196]

Program received signal SIGTRAP, Trace/breakpoint trap.
[Switching to Thread 1073432196]
0x400db751 in blink_task (pvParameter=0x0) at /home/user-name/esp/blink/main/./
↪blink.c:33
33          i++;
(gdb)
```

Resume application couple more times so `i` gets incremented. Now you can enter `print i` (in short `p i`) to check the current value of `i`:

```
(gdb) p i
$1 = 3
(gdb)
```

To modify the value of `i` use `set` command as below (you can then print it out to check if it has been indeed changed):

```
(gdb) set var i = 0
(gdb) p i
$3 = 0
(gdb)
```

You may have up to two watchpoints, see *Breakpoints and watchpoints available*.

Setting conditional breakpoints Here comes more interesting part. You may set a breakpoint to halt the program execution, if certain condition is satisfied. Delete existing breakpoints and try this:

```
(gdb) break blink.c:34 if (i == 2)
Breakpoint 3 at 0x400db753: file /home/user-name/esp/blink/main/./blink.c, line 34.
(gdb)
```

Above command sets conditional breakpoint to halt program execution in line `34` of `blink.c` if `i == 2`.

If current value of `i` is less than `2` and program is resumed, it will blink LED in a loop until condition `i == 2` gets true and then finally halt:

```
(gdb) set var i = 0
(gdb) c
Continuing.
Target halted. PRO_CPU: PC=0x400DB755 (active)    APP_CPU: PC=0x400D112C
Target halted. PRO_CPU: PC=0x400DB753 (active)    APP_CPU: PC=0x400D112C
Target halted. PRO_CPU: PC=0x400DB755 (active)    APP_CPU: PC=0x400D112C
Target halted. PRO_CPU: PC=0x400DB753 (active)    APP_CPU: PC=0x400D112C

Breakpoint 3, blink_task (pvParameter=0x0) at /home/user-name/esp/blink/main/./
↪blink.c:34
34          gpio_set_level(BLINK_GPIO, 0);
(gdb)
```

Obtaining help on commands Commands presented so for should provide are very basis and intended to let you quickly get started with JTAG debugging. Check help what are the other commands at you disposal. To obtain help on syntax and functionality of particular command, being at `(gdb)` prompt type `help` and command name:

```
(gdb) help next
Step program, proceeding through subroutine calls.
Usage: next [N]
Unlike "step", if the current source line calls a subroutine,
this command does not enter the subroutine, but instead steps over
the call, in effect treating it as a single source line.
(gdb)
```

By typing just `help`, you will get top level list of command classes, to aid you drilling down to more details. Optionally refer to available GDB cheat sheets, for instance https://darkdust.net/files/GDB%20Cheat%20Sheet.pdf. Good to have as a reference (even if not all commands are applicable in an embedded environment).

Ending debugger session To quit debugger enter `q`:

```
(gdb) q
A debugging session is active.

    Inferior 1 [Remote target] will be detached.

Quit anyway? (y or n) y
Detaching from program: /home/user-name/esp/blink/build/blink.elf, Remote target
Ending remote debugging.
user-name@computer-name:~/esp/blink$
```

- *Using Debugger*
- *Debugging Examples*
- *Tips and Quirks*
- *Application Level Tracing library*
- Introduction to ESP-Prog Board

4.20 Linker Script Generation

4.20.1 Overview

There are several *memory regions* where code and data can be placed. Code and read-only data are placed by default in flash, writable data in RAM, etc. However, it is sometimes necessary to change these default placements.

For example, it may be necessary to place critical code in RAM for performance reasons or to place code in RTC memory for use in a wake stub or the ULP coprocessor.

With the linker script generation mechanism, it is possible to specify these placements at the component level within ESP-IDF. The component presents information on how it would like to place its symbols, objects or the entire archive. During build, the information presented by the components are collected, parsed and processed; and the placement rules generated is used to link the app.

4.20.2 Quick Start

This section presents a guide for quickly placing code/data to RAM and RTC memory - placements ESP-IDF provides out-of-the-box.

For this guide, suppose we have the following:

```
- components/
                - my_component/
                                - CMakeLists.txt
                                - component.mk
                                - Kconfig
                                - src/
                                      - my_src1.c
                                      - my_src2.c
                                      - my_src3.c
                                - my_linker_fragment_file.lf
```

- a component named `my_component` that is archived as library `libmy_component.a` during build
- three source files archived under the library, `my_src1.c`, `my_src2.c` and `my_src3.c` which are compiled as `my_src1.o`, `my_src2.o` and `my_src3.o`, respectively
- under `my_src1.o`, the function `my_function1` is defined; under `my_src2.o`, the function `my_function2` is defined
- there is bool-type config `PERFORMANCE_MODE` (y/n) and int type config `PERFORMANCE_LEVEL` (with range 0-3) in `my_component`'s Kconfig

Creating and Specifying a Linker Fragment File

Before anything else, a linker fragment file needs to be created. A linker fragment file is simply a text file with a `.lf` extension upon which the desired placements will be written. After creating the file, it is then necessary to present it to the build system. The instructions for the build systems supported by ESP-IDF are as follows:

Make In the component's `component.mk` file, set the variable `COMPONENT_ADD_LDFRAGMENTS` to the path of the created linker fragment file. The path can either be an absolute path or a relative path from the component directory.

```
COMPONENT_ADD_LDFRAGMENTS += my_linker_fragment_file.lf
```

CMake In the component's `CMakeLists.txt` file, specify argument `LDFRAGMENTS` in the `idf_component_register` call. The value of `LDFRAGMENTS` can either be an absolute path or a relative path from the component directory to the created linker fragment file.

```
# file paths relative to CMakeLists.txt
idf_component_register(...
                       LDFRAGMENTS "path/to/linker_fragment_file.lf" "path/to/
↪another_linker_fragment_file.lf"
                       ...
                       )
```

Specifying placements

It is possible to specify placements at the following levels of granularity:

- object file (`.obj` or `.o` files)
- symbol (function/variable)
- archive (`.a` files)

Placing object files Suppose the entirety of `my_src1.o` is performance-critical, so it is desirable to place it in RAM. On the other hand, the entirety of `my_src2.o` contains symbols needed coming out of deep sleep, so it needs to be put under RTC memory. In the the linker fragment file, we can write:

```
[mapping:my_component]
archive: libmy_component.a
entries:
    my_src1 (noflash)      # places all my_src1 code/read-only data under IRAM/DRAM
    my_src2 (rtc)          # places all my_src2 code/ data and read-only data under␣
↪RTC fast memory/RTC slow memory
```

What happens to `my_src3.o`? Since it is not specified, default placements are used for `my_src3.o`. More on default placements *here*.

Placing symbols Continuing our example, suppose that among functions defined under `object1.o`, only `my_function1` is performance-critical; and under `object2.o`, only `my_function2` needs to execute after the chip comes out of deep sleep. This could be accomplished by writing:

```
[mapping:my_component]
archive: libmy_component.a
entries:
    my_src1:my_function1 (noflash)
    my_src2:my_function2 (rtc)
```

The default placements are used for the rest of the functions in `my_src1.o` and `my_src2.o` and the entire `object3.o`. Something similar can be achieved for placing data by writing the variable name instead of the function name, like so:

```
my_src1:my_variable (noflash)
```

Warning: There are *limitations* in placing code/data at symbol granularity. In order to ensure proper placements, an alternative would be to group relevant code and data into source files, and *use object-granularity placements*.

Placing entire archive In this example, suppose that the entire component archive needs to be placed in RAM. This can be written as:

```
[mapping:my_component]
archive: libmy_component.a
entries:
    * (noflash)
```

Similarly, this places the entire component in RTC memory:

```
[mapping:my_component]
archive: libmy_component.a
entries:
    * (rtc)
```

Configuration-dependent placements Suppose that the entire component library should only have special placement when a certain condition is true; for example, when `CONFIG_PERFORMANCE_MODE == y`. This could be written as:

```
[mapping:my_component]
archive: libmy_component.a
entries:
    if PERFORMANCE_MODE = y:
        * (noflash)
    else:
        * (default)
```

For a more complex config-dependent placement, suppose the following requirements: when `CONFIG_PERFORMANCE_LEVEL == 1`, only `object1.o` is put in RAM; when `CONFIG_PERFORMANCE_LEVEL == 2`, `object1.o` and `object2.o`; and when `CONFIG_PERFORMANCE_LEVEL == 3` all object files under the archive are to be put into RAM. When these three are false however, put entire library in RTC memory. This scenario is a bit contrived, but, it can be written as:

```
[mapping:my_component]
archive: libmy_component.a
entries:
    if PERFORMANCE_LEVEL = 1:
        my_src1 (noflash)
    elif PERFORMANCE_LEVEL = 2:
        my_src1 (noflash)
        my_src2 (noflash)
    elif PERFORMANCE_LEVEL = 3:
        my_src1 (noflash)
        my_src2 (noflash)
        my_src3 (noflash)
    else:
        * (rtc)
```

Nesting condition-checking is also possible. The following is equivalent to the snippet above:

```
[mapping:my_component]
archive: libmy_component.a
entries:
    if PERFORMANCE_LEVEL <= 3 && PERFORMANCE_LEVEL > 0:
        if PERFORMANCE_LEVEL >= 1:
            object1 (noflash)
            if PERFORMANCE_LEVEL >= 2:
                object2 (noflash)
                if PERFORMANCE_LEVEL >= 3:
                    object2 (noflash)
    else:
        * (rtc)
```

The 'default' placements

Up until this point, the term 'default placements' has been mentioned as fallback placements when the placement rules `rtc` and `noflash` are not specified. It is important to note that the tokens `noflash` or `rtc` are not merely keywords, but are actually entities called fragments, specifically *schemes*.

In the same manner as `rtc` and `noflash` are schemes, there exists a `default` scheme which defines what the default placement rules should be. As the name suggests, it is where code and data are usually placed, i.e. code/constants is placed in flash, variables placed in RAM, etc. More on the default scheme *here*.

Note: For an example of an ESP-IDF component using the linker script generation mechanism, see freertos/CMakeLists.txt. `freertos` uses this to place its object files to the instruction RAM for performance reasons.

This marks the end of the quick start guide. The following text discusses the internals of the mechanism in a little bit more detail. The following sections should be helpful in creating custom placements or modifying default behavior.

4.20.3 Linker Script Generation Internals

Linking is the last step in the process of turning C/C++ source files into an executable. It is performed by the toolchain's linker, and accepts linker scripts which specify code/data placements, among other things. With the

linker script generation mechanism, this process is no different, except that the linker script passed to the linker is dynamically generated from: (1) the collected *linker fragment files* and (2) *linker script template*.

Note: The tool that implements the linker script generation mechanism lives under tools/ldgen.

Linker Fragment Files

As mentioned in the quick start guide, fragment files are simple text files with the `.lf` extension containing the desired placements. This is a simplified description of what fragment files contain, however. What fragment files actually contain are 'fragments'. Fragments are entities which contain pieces of information which, when put together, form placement rules that tell where to place sections of object files in the output binary. There are three types of fragments: *sections*, *scheme* and *mapping*.

Grammar The three fragment types share a common grammar:

```
[type:name]
key: value
key:
    value
    value
    value
    ...
```

- type: Corresponds to the fragment type, can either be `sections`, `scheme` or `mapping`.
- name: The name of the fragment, should be unique for the specified fragment type.
- key, value: Contents of the fragment; each fragment type may support different keys and different grammars for the key values.

Note: In cases where multiple fragments of the same type and name are encountered, an exception is thrown.

Note: The only valid characters for fragment names and keys are alphanumeric characters and underscore.

Condition Checking

Condition checking enable the linker script generation to be configuration-aware. Depending on whether expressions involving configuration values are true or not, a particular set of values for a key can be used. The evaluation uses `eval_string` from kconfiglib package and adheres to its required syntax and limitations. Supported operators are as follows:

- **comparison**
  - LessThan <
  - LessThanOrEqualTo <=
  - MoreThan >
  - MoreThanOrEqualTo >=
  - Equal =
  - NotEqual !=
- **logical**
  - Or ||
  - And &&
  - Negation !
- **grouping**
  - Parenthesis ()

Condition checking behaves as you would expect an `if...elseif/elif...else` block in other languages. Condition-checking is possible for both key values and entire fragments. The two sample fragments below are equivalent:

```
# Value for keys is dependent on config
[type:name]
key_1:
    if CONDITION = y:
        value_1
    else:
        value_2
key_2:
    if CONDITION = y:
        value_a
    else:
        value_b
```

```
# Entire fragment definition is dependent on config
if CONDITION = y:
    [type:name]
    key_1:
        value_1
    key_2:
        value_a
else:
    [type:name]
    key_1:
        value_2
    key_2:
        value_b
```

Comments

Comment in linker fragment files begin with `#`. Like in other languages, comment are used to provide helpful descriptions and documentation and are ignored during processing.

Compatibility with ESP-IDF v3.x Linker Script Fragment Files ESP-IDF v4.0 brings some changes to the linker script fragment file grammar:

- indentation is enforced and improperly indented fragment files generate a parse exception; this was not enforced in the old version but previous documentation and examples demonstrates properly indented grammar
- move to `if...elif...else` structure for conditionals, with the ability to nest checks and place entire fragments themselves inside conditionals
- mapping fragments now requires a name like other fragment types

Linker script generator should be able to parse ESP-IDF v3.x linker fragment files that are indented properly (as demonstrated by the ESP-IDF v3.x version of this document). Backward compatibility with the previous mapping fragment grammar (optional name and the old grammar for conditionals) has also been retained but with a deprecation warning. Users should switch to the newer grammar discussed in this document as support for the old grammar is planned to be removed in the future.

Note that linker fragment files using the new ESP-IDF v4.0 grammar is not supported on ESP-IDF v3.x, however.

Types Sections

Sections fragments defines a list of object file sections that the GCC compiler emits. It may be a default section (e.g. `.text`, `.data`) or it may be user defined section through the `__attribute__` keyword.

The use of an optional '+' indicates the inclusion of the section in the list, as well as sections that start with it. This is the preferred method over listing both explicitly.

```
[sections:name]
entries:
    .section+
    .section
    ...
```

Example:

```
# Non-preferred
[sections:text]
entries:
    .text
    .text.*
    .literal
    .literal.*

# Preferred, equivalent to the one above
[sections:text]
entries:
    .text+              # means .text and .text.*
    .literal+           # means .literal and .literal.*
```

Scheme

Scheme fragments define what `target` a sections fragment is assigned to.

```
[scheme:name]
entries:
    sections -> target
    sections -> target
    ...
```

Example:

```
[scheme:noflash]
entries:
    text -> iram0_text          # the entries under the sections fragment named␣
↪text will go to iram0_text
    rodata -> dram0_data        # the entries under the sections fragment named␣
↪rodata will go to dram0_data
```

The `default` scheme

There exists a special scheme with the name `default`. This scheme is special because catch-all placement rules are generated from its entries. This means that, if one of its entries is `text -> flash_text`, the placement rule will be generated for the target `flash_text`.

```
*(.literal .literal.* .text .text.*)
```

These catch-all rules then effectively serve as fallback rules for those whose mappings were not specified.

The `default scheme` is defined in esp_system/app.lf. The `noflash` and `rtc` scheme fragments which are built-in schemes referenced in the quick start guide are also defined in this file.

Mapping

Mapping fragments define what scheme fragment to use for mappable entities, i.e. object files, function names, variable names, archives.

```
[mapping:name]
archive: archive                # output archive file name, as built (i.e. libxxx.
↪a)
entries:
```

(continues on next page)

(continued from previous page)

```
    object:symbol (scheme)      # symbol granularity
    object (scheme)             # object granularity
    * (scheme)                  # archive granularity
```

There are three levels of placement granularity:

- symbol: The object file name and symbol name are specified. The symbol name can be a function name or a variable name.
- object: Only the object file name is specified.
- archive: `*` is specified, which is a short-hand for all the object files under the archive.

To know what an entry means, let us expand a sample object-granularity placement:

```
object (scheme)
```

Then expanding the scheme fragment from its entries definitions, we have:

```
object (sections -> target,
        sections -> target,
        ...)
```

Expanding the sections fragment with its entries definition:

```
object (.section,       # given this object file
        .section,       # put its sections listed here at this
        ... -> target, # target

        .section,
        .section,       # same should be done for these sections
        ... -> target,

        ...)            # and so on
```

Example:

```
[mapping:map]
archive: libfreertos.a
entries:
    * (noflash)
```

Aside from the entity and scheme, flags can also be specified in an entry. The following flags are supported (note: <> = argument name, [] = optional):

1. ALIGN(<alignment>[, pre, post])
   Align the placement by the amount specified in `alignment`. Generates
2. SORT([<sort_by_first>, <sort_by_second>])
   Emits `SORT_BY_NAME`, `SORT_BY_ALIGNMENT`, `SORT_BY_INIT_PRIORITY` or `SORT` in the input section description.
   Possible values for `sort_by_first` and `sort_by_second` are: `name`, `alignment`, `init_priority`.
   If both `sort_by_first` and `sort_by_second` are not specified, the input sections are sorted by name. If both are specified, then the nested sorting follows the same rules discussed in https://sourceware.org/binutils/docs/ld/Input-Section-Wildcards.html.
3. KEEP()
   Prevent the linker from discarding the placement by surrounding the input section description with KEEP command. See https://sourceware.org/binutils/docs/ld/Input-Section-Keep.html for more details.

4.SURROUND(<name>)

Generate symbols before and after the placement. The generated symbols follow the naming `_<name>_start` and `_<name>_end`. For example, if `name` == sym1,

When adding flags, the specific `section -> target` in the scheme needs to be specified. For multiple `section -> target`, use a comma as a separator. For example,

```
# Notes:
# A. semicolon after entity-scheme
# B. comma before section2 -> target2
# C. section1 -> target1 and section2 -> target2 should be defined in entries of␣
↪scheme1
entity1 (scheme1);
    section1 -> target1 KEEP() ALIGN(4, pre, post),
    section2 -> target2 SURROUND(sym) ALIGN(4, post) SORT()
```

Putting it all together, the following mapping fragment, for example,

```
[mapping:name]
archive: lib1.a
entries:
    obj1 (noflash);
        rodata -> dram0_data KEEP() SORT() ALIGN(8) SURROUND(my_sym)
```

generates an output on the linker script:

```
. = ALIGN(8)
_my_sym_start = ABSOLUTE(.)
KEEP(lib1.a:obj1.*( SORT(.rodata) SORT(.rodata.*) ))
_my_sym_end = ABSOLUTE(.)
```

Note that ALIGN and SURROUND, as mentioned in the flag descriptions, are order sensitive. Therefore, if for the same mapping fragment these two are switched, the following is generated instead:

```
_my_sym_start = ABSOLUTE(.)
. = ALIGN(8)
KEEP(lib1.a:obj1.*( SORT(.rodata) SORT(.rodata.*) ))
_my_sym_end = ABSOLUTE(.)
```

On Symbol-Granularity Placements Symbol granularity placements is possible due to compiler flags `-ffunction-sections` and `-ffdata-sections`. ESP-IDF compiles with these flags by default. If the user opts to remove these flags, then the symbol-granularity placements will not work. Furthermore, even with the presence of these flags, there are still other limitations to keep in mind due to the dependence on the compiler's emitted output sections.

For example, with `-ffunction-sections`, separate sections are emitted for each function; with section names predictably constructed i.e. `.text.{func_name}` and `.literal.{func_name}`. This is not the case for string literals within the function, as they go to pooled or generated section names.

With `-fdata-sections`, for global scope data the compiler predictably emits either `.data.{var_name}`, `.rodata.{var_name}` or `.bss.{var_name}`; and so `Type I` mapping entry works for these. However, this is not the case for static data declared in function scope, as the generated section name is a result of mangling the variable name with some other information.

Linker Script Template

The linker script template is the skeleton in which the generated placement rules are put into. It is an otherwise ordinary linker script, with a specific marker syntax that indicates where the generated placement rules are placed.

To reference the placement rules collected under a `target` token, the following syntax is used:

```
mapping[target]
```

Example:

The example below is an excerpt from a possible linker script template. It defines an output section `.iram0.text`, and inside is a marker referencing the target `iram0_text`.

```
.iram0.text :
{
    /* Code marked as runnning out of IRAM */
    _iram_text_start = ABSOLUTE(.);

    /* Marker referencing iram0_text */
    mapping[iram0_text]

    _iram_text_end = ABSOLUTE(.);
} > iram0_0_seg
```

Suppose the generator collected the fragment definitions below:

```
[sections:text]
    .text+
    .literal+

[sections:iram]
    .iram1+

[scheme:default]
entries:
    text -> flash_text
    iram -> iram0_text

[scheme:noflash]
entries:
    text -> iram0_text

[mapping:freertos]
archive: libfreertos.a
entries:
    * (noflash)
```

Then the corresponding excerpt from the generated linker script will be as follows:

```
.iram0.text :
{
    /* Code marked as runnning out of IRAM */
    _iram_text_start = ABSOLUTE(.);

    /* Placement rules generated from the processed fragments, placed where the␣
↪marker was in the template */
    *(.iram1 .iram1.*)
    *libfreertos.a:(.literal .text .literal.* .text.*)

    _iram_text_end = ABSOLUTE(.);
} > iram0_0_seg
```

`*libfreertos.a:(.literal .text .literal.* .text.*)`

> Rule generated from the entry `* (noflash)` of the `freertos` mapping fragment. All `text` sections of all object files under the archive `libfreertos.a` will be collected under the target `iram0_text` (as per the `noflash` scheme) and placed wherever in the template `iram0_text` is referenced by a marker.

`*(.iram1 .iram1.*)`

> Rule generated from the default scheme entry `iram -> iram0_text`. Since the default scheme specifies an `iram -> iram0_text` entry, it too is placed wherever `iram0_text` is referenced

by a marker. Since it is a rule generated from the default scheme, it comes first among all other rules collected under the same target name.

The linker script template currently used is esp_system/ld/esp32/sections.ld.in; the generated output script `sections.ld` is put under its build directory.

4.21 Memory Types

ESP32 chip has multiple memory types and flexible memory mapping features. This section describes how ESP-IDF uses these features by default.

ESP-IDF distinguishes between instruction memory bus (IRAM, IROM, RTC FAST memory) and data memory bus (DRAM, DROM). Instruction memory is executable, and can only be read or written via 4-byte aligned words. Data memory is not executable and can be accessed via individual byte operations. For more information about the different memory buses consult the ESP32 Technical Reference Manual* > *System and Memory* [PDF].

4.21.1 DRAM (Data RAM)

Non-constant static data (.data) and zero-initialized data (.bss) is placed by the linker into Internal SRAM as data memory. Remaining space in this region is used for the runtime heap.

By applying the `EXT_RAM_ATTR` macro, zero-initialized data can also be placed into external RAM. To use this macro, the *CONFIG_SPIRAM_ALLOW_BSS_SEG_EXTERNAL_MEMORY* needs to be enabled. See *Allow .bss segment placed in external memory*.

The available size of the internal DRAM region is reduced by 64kB (by shifting start address to `0x3FFC0000`) if Bluetooth stack is used. Length of this region is also reduced by 16 kB or 32kB if trace memory is used. Due to some memory fragmentation issues caused by ROM, it is also not possible to use all available DRAM for static allocations - however the remaining DRAM is still available as heap at runtime.

Constant data may also be placed into DRAM, for example if it is used in an non-flash-safe ISR (see explanation under *How to place code in IRAM*).

"noinit" DRAM

The macro `__NOINIT_ATTR` can be used as attribute to place data into `.noinit` section. The values placed into this section will not be initialized at startup and should keep its value after software restart.

By applying the `EXT_RAM_NOINIT_ATTR` macro, Non-initialized value could also be placed in external RAM. To do this, the *CONFIG_SPIRAM_ALLOW_NOINIT_SEG_EXTERNAL_MEMORY* needs to be enabled. See *Allow .noinit segment placed in external memory*. If the *CONFIG_SPIRAM_ALLOW_NOINIT_SEG_EXTERNAL_MEMORY* is not enabled, `EXT_RAM_NOINIT_ATTR` will behave just as `__NOINIT_ATTR`, it will make data to be placed into `.noinit` segment in internal RAM.

Example:

```
__NOINIT_ATTR uint32_t noinit_data;
```

4.21.2 IRAM (Instruction RAM)

ESP-IDF allocates part of Internal SRAM0 region for instruction RAM. The region is defined in *ESP32 Technical Reference Manual* > *System and Memory* > *Embedded Memory* [PDF]. Except for the first 64 kB block which is used for PRO and APP MMU caches, the rest of this memory range (i.e. from `0x40080000` to `0x400A0000`) is used to store parts of the application which need to run from RAM.

Why place code in IRAM

Cases when parts of application should be placed into IRAM:

- Interrupt handlers must be placed into IRAM if `ESP_INTR_FLAG_IRAM` is used when registering the interrupt handler. For more information, see *IRAM-Safe Interrupt Handlers*.
- Some timing critical code may be placed into IRAM to reduce the penalty associated with loading the code from flash. ESP32 reads code and data from flash via the MMU cache. In some cases, placing a function into IRAM may reduce delays caused by a cache miss and significantly improve that function's performance.

How to place code in IRAM

Some code is automatically placed into the IRAM region using the linker script.

If some specific application code needs to be placed into IRAM, it can be done by using the *Linker Script Generation* feature and adding a linker script fragment file to your component that targets entire source files or functions with the `noflash` placement. See the *Linker Script Generation* docs for more information.

Alternatively, it's possible to specify IRAM placement in the source code using the `IRAM_ATTR` macro:

```
#include "esp_attr.h"

void IRAM_ATTR gpio_isr_handler(void* arg)
{
        // ...
}
```

There are some possible issues with placement in IRAM, that may cause problems with IRAM-safe interrupt handlers:

- Strings or constants inside an `IRAM_ATTR` function may not be placed in RAM automatically. It's possible to use `DRAM_ATTR` attributes to mark these, or using the linker script method will cause these to be automatically placed correctly.

  ```
  void IRAM_ATTR gpio_isr_handler(void* arg)
  {
     const static DRAM_ATTR uint8_t INDEX_DATA[] = { 45, 33, 12, 0 };
     const static char *MSG = DRAM_STR("I am a string stored in RAM");
  }
  ```

  Note that knowing which data should be marked with `DRAM_ATTR` can be hard, the compiler will sometimes recognize that a variable or expression is constant (even if it is not marked `const`) and optimize it into flash, unless it is marked with `DRAM_ATTR`.
- GCC optimizations that automatically generate jump tables or switch/case lookup tables place these tables in flash. IDF by default builds all files with *-fno-jump-tables -fno-tree-switch-conversion* flags to avoid this.

  Jump table optimizations can be re-enabled for individual source files that don't need to be placed in IRAM. For instructions on how to add the -fjump-tables -ftree-switch-conversion options when compiling individual source files, see *Controlling Component Compilation*

4.21.3 IROM (code executed from Flash)

If a function is not explicitly placed into *IRAM (Instruction RAM)* or RTC memory, it is placed into flash. The mechanism by which Flash MMU is used to allow code execution from flash is described in *ESP32 Technical Reference Manual* > *Memory Management and Protection Units (MMU, MPU)* [PDF]. As IRAM is limited, most of an application's binary code must be placed into IROM instead.

During *Application Startup Flow*, the bootloader (which runs from IRAM) configures the MMU flash cache to map the app's instruction code region to the instruction space. Flash accessed via the MMU is cached using some internal SRAM and accessing cached flash data is as fast as accessing other types of internal memory.

4.21.4 RTC fast memory

The same region of RTC fast memory can be accessed as both instruction and data memory. Code which has to run after wake-up from deep sleep mode has to be placed into RTC memory. Please check detailed description in *deep sleep* documentation.

RTC fast memory can only be accessed by the PRO CPU.

In single core mode, remaining RTC fast memory is added to the heap unless the option *CONFIG_ESP_SYSTEM_ALLOW_RTC_FAST_MEM_AS_HEAP* is disabled. This memory can be used interchangeably with *DRAM (Data RAM)*, but is slightly slower to access and not DMA capable.

4.21.5 DROM (data stored in Flash)

By default, constant data is placed by the linker into a region mapped to the MMU flash cache. This is the same as the *IROM (code executed from Flash)* section, but is for read-only data not executable code.

The only constant data not placed into into this memory type by default are literal constants which are embedded by the compiler into application code. These are placed as the surrounding function's executable instructions.

The `DRAM_ATTR` attribute can be used to force constants from DROM into the *DRAM (Data RAM)* section (see above).

4.21.6 RTC slow memory

Global and static variables used by code which runs from RTC memory must be placed into RTC slow memory. For example *deep sleep* variables can be placed here instead of RTC fast memory, or code and variables accessed by the *ULP Coprocessor programming*.

The attribute macro named `RTC_NOINIT_ATTR` can be used to place data into this type of memory. The values placed into this section keep their value after waking from deep sleep.

Example:

```
RTC_NOINIT_ATTR uint32_t rtc_noinit_data;
```

4.21.7 DMA Capable Requirement

Most peripheral DMA controllers (e.g. SPI, sdmmc, etc.) have requirements that sending/receiving buffers should be placed in DRAM and word-aligned. We suggest to place DMA buffers in static variables rather than in the stack. Use macro `DMA_ATTR` to declare global/local static variables like:

```
DMA_ATTR uint8_t buffer[]="I want to send something";

void app_main()
{
    // initialization code...
    spi_transaction_t temp = {
        .tx_buffer = buffer,
        .length = 8 * sizeof(buffer),
    };
    spi_device_transmit(spi, &temp);
    // other stuff
}
```

Or:

```
void app_main()
{
    DMA_ATTR static uint8_t buffer[] = "I want to send something";
    // initialization code...
    spi_transaction_t temp = {
        .tx_buffer = buffer,
        .length = 8 * sizeof(buffer),
    };
    spi_device_transmit(spi, &temp);
    // other stuff
}
```

It is also possible to allocate DMA-capable memory buffers dynamically by using the *MALLOC_CAP_DMA* capabilities flag.

4.21.8 DMA Buffer in the stack

Placing DMA buffers in the stack is possible but discouraged. If doing so, pay attention to the following:

- Placing DRAM buffers on the stack is not recommended if the stack may be in PSRAM. If the stack of a task is placed in the PSRAM, several steps have to be taken as described in *Support for external RAM*.
- Use macro `WORD_ALIGNED_ATTR` in functions before variables to place them in proper positions like:

```
void app_main()
{
    uint8_t stuff;
    WORD_ALIGNED_ATTR uint8_t buffer[] = "I want to send something";    //or␣
↪the buffer will be placed right after stuff.
    // initialization code...
    spi_transaction_t temp = {
        .tx_buffer = buffer,
        .length = 8 * sizeof(buffer),
    };
    spi_device_transmit(spi, &temp);
    // other stuff
}
```

4.22 lwIP

ESP-IDF uses the open source lwIP lightweight TCP/IP stack. The ESP-IDF version of lwIP (esp-lwip) has some modifications and additions compared to the upstream project.

4.22.1 Supported APIs

ESP-IDF supports the following lwIP TCP/IP stack functions:

- *BSD Sockets API*
- *Netconn API* is enabled but not officially supported for ESP-IDF applications

Adapted APIs

Some common lwIP "app" APIs are supported indirectly by ESP-IDF:

- DHCP Server & Client are supported indirectly via the *ESP-NETIF* functionality

- Simple Network Time Protocol (SNTP) is supported via the lwip/include/apps/sntp/sntp.h lwip/lwip/src/include/lwip/apps/sntp.h functions (see also *SNTP Time Synchronization*)
- ICMP Ping is supported using a variation on the lwIP ping API. See *ICMP Echo*.
- NetBIOS lookup is available using the standard lwIP API. protocols/http_server/restful_server has an option to demonstrate using NetBIOS to look up a host on the LAN.
- mDNS uses a different implementation to the lwIP default mDNS (see *mDNS Service*), but lwIP can look up mDNS hosts using standard APIs such as `gethostbyname()` and the convention `hostname.local`, provided the *CONFIG_LWIP_DNS_SUPPORT_MDNS_QUERIES* setting is enabled.

4.22.2 BSD Sockets API

The BSD Sockets API is a common cross-platform TCP/IP sockets API that originated in the Berkeley Standard Distribution of UNIX but is now standardized in a section of the POSIX specification. BSD Sockets are sometimes called POSIX Sockets or Berkeley Sockets.

As implemented in ESP-IDF, lwIP supports all of the common usages of the BSD Sockets API.

References

A wide range of BSD Sockets reference material is available, including:

- Single UNIX Specification BSD Sockets page
- Berkeley Sockets Wikipedia page

Examples

A number of ESP-IDF examples show how to use the BSD Sockets APIs:

- protocols/sockets/tcp_server
- protocols/sockets/tcp_client
- protocols/sockets/udp_server
- protocols/sockets/udp_client
- protocols/sockets/udp_multicast
- protocols/http_request (Note: this is a simplified example of using a TCP socket to send an HTTP request. The *ESP HTTP Client* is a much better option for sending HTTP requests.)

Supported functions

The following BSD socket API functions are supported. For full details see lwip/lwip/src/include/lwip/sockets.h.

- `socket()`
- `bind()`
- `accept()`
- `shutdown()`
- `getpeername()`
- `getsockopt()` & `setsockopt()` (see *Socket Options*)
- `close()` (via *Virtual filesystem component*)
- `read()`, `readv()`, `write()`, `writev()` (via *Virtual filesystem component*)
- `recv()`, `recvmsg()`, `recvfrom()`
- `send()`, `sendmsg()`, `sendto()`
- `select()` (via *Virtual filesystem component*)
- `poll()` (Note: on ESP-IDF, `poll()` is implemented by calling select internally, so using `select()` directly is recommended if a choice of methods is available.)
- `fcntl()` (see *fcntl*)

Non-standard functions:

- `ioctl()` (see *ioctls*)

Note: Some lwIP application sample code uses prefixed versions of BSD APIs, for example `lwip_socket()` instead of the standard `socket()`. Both forms can be used with ESP-IDF, but using standard names is recommended.

Socket Error Handling

BSD Socket error handling code is very important for robust socket applications. Normally the socket error handling involves the following aspects:

- Detecting the error.
- Geting the error reason code.
- Handle the error according to the reason code.

In lwIP, we have two different scenarios of handling socket errors:

- Socket API returns an error. For more information, see *Socket API Errors*.
- `select(int maxfdp1, fd_set *readset, fd_set *writeset, fd_set *exceptset, struct timeval *timeout)` has exception descriptor indicating that the socket has an error. For more information, see *select() Errors*.

Socket API Errors

The error detection

- We can know that the socket API fails according to its return value.

Get the error reason code

- When socket API fails, the return value doesn't contain the failure reason and the application can get the error reason code by accessing errno. Different values indicate different meanings. For more information, see <*Socket Error Reason Code*>.

Example:

```
int err;
int sockfd;

if (sockfd = socket(AF_INET,SOCK_STREAM,0) < 0) {
    // the error code is obtained from errno
    err = errno;
    return err;
}
```

select() Errors

The error detection

- Socket error when `select()` has exception descriptor

Get the error reason code

- If the `select` indicates that the socket fails, we can't get the error reason code by accessing errno, instead we should call `getsockopt()` to get the failure reason code. Because `select()` has exception descriptor, the error code will not be given to errno.

Note: `getsockopt` function prototype `int getsockopt(int s, int level, int optname, void *optval, socklen_t *optlen)`. Its function is to get the current value of the option of any type, any state socket, and store the result in optval. For example, when you get the error code on a socket, you can get it by `getsockopt(sockfd, SOL_SOCKET, SO_ERROR, &err, &optlen)`.

Example:

```
int err;

if (select(sockfd + 1, NULL, NULL, &exfds, &tval) <= 0) {
    err = errno;
    return err;
} else {
    if (FD_ISSET(sockfd, &exfds)) {
        // select() exception set using getsockopt()
        int optlen = sizeof(int);
        getsockopt(sockfd, SOL_SOCKET, SO_ERROR, &err, &optlen);
        return err;
    }
}
```

Socket Error Reason Code Below is a list of common error codes. For more detailed list of standard POSIX/C error codes, please see *newlib errno.h <https://github.com/espressif/newlib-esp32/blob/master/newlib/libc/include/sys/errno.h>* and the platform-specific extensions newlib/platform_include/errno.h

Error code	Description
ECONNREFUSED	Connection refused
EADDRINUSE	Address already in use
ECONNABORTED	Software caused connection abort
ENETUNREACH	Network is unreachable
ENETDOWN	Network interface is not configured
ETIMEDOUT	Connection timed out
EHOSTDOWN	Host is down
EHOSTUNREACH	Host is unreachable
EINPROGRESS	Connection already in progress
EALREADY	Socket already connected
EDESTADDRREQ	Destination address required
EPROTONOSUPPORT	Unknown protocol

Socket Options

The `getsockopt()` and `setsockopt()` functions allow getting/setting per-socket options.

Not all standard socket options are supported by lwIP in ESP-IDF. The following socket options are supported:

Common options Used with level argument `SOL_SOCKET`.

- `SO_REUSEADDR` (available if *CONFIG_LWIP_SO_REUSE* is set, behavior can be customized by setting *CONFIG_LWIP_SO_REUSE_RXTOALL*)
- `SO_KEEPALIVE`
- `SO_BROADCAST`
- `SO_ACCEPTCONN`
- `SO_RCVBUF` (available if *CONFIG_LWIP_SO_RCVBUF* is set)
- `SO_SNDTIMEO` / `SO_RCVTIMEO`
- `SO_ERROR` (this option is only used with `select()`, see *Socket Error Handling*)
- `SO_TYPE`
- `SO_NO_CHECK` (for UDP sockets only)

IP options Used with level argument `IPPROTO_IP`.

- `IP_TOS`
- `IP_TTL`

- IP_PKTINFO (available if *CONFIG_LWIP_NETBUF_RECVINFO* is set)

For multicast UDP sockets:

- IP_MULTICAST_IF
- IP_MULTICAST_LOOP
- IP_MULTICAST_TTL
- IP_ADD_MEMBERSHIP
- IP_DROP_MEMBERSHIP

TCP options TCP sockets only. Used with level argument IPPROTO_TCP.

- TCP_NODELAY

Options relating to TCP keepalive probes:

- TCP_KEEPALIVE (int value, TCP keepalive period in milliseconds)
- TCP_KEEPIDLE (same as TCP_KEEPALIVE, but the value is in seconds)
- TCP_KEEPINTVL (int value, interval between keepalive probes in seconds)
- TCP_KEEPCNT (int value, number of keepalive probes before timing out)

IPv6 options IPv6 sockets only. Used with level argument IPPROTO_IPV6

- IPV6_CHECKSUM
- IPV6_V6ONLY

For multicast IPv6 UDP sockets:

- IPV6_JOIN_GROUP / IPV6_ADD_MEMBERSHIP
- IPV6_LEAVE_GROUP / IPV6_DROP_MEMBERSHIP
- IPV6_MULTICAST_IF
- IPV6_MULTICAST_HOPS
- IPV6_MULTICAST_LOOP

fcntl

The fcntl() function is a standard API for manipulating options related to a file descriptor. In ESP-IDF, the *Virtual filesystem component* layer is used to implement this function.

When the file descriptor is a socket, only the following fcntl() values are supported:

- O_NONBLOCK to set/clear non-blocking I/O mode. Also supports O_NDELAY, which is identical to O_NONBLOCK.
- O_RDONLY, O_WRONLY, O_RDWR flags for different read/write modes. These can read via F_GETFL only, they cannot be set using F_SETFL. A TCP socket will return a different mode depending on whether the connection has been closed at either end or is still open at both ends. UDP sockets always return O_RDWR.

ioctls

The ioctl() function provides a semi-standard way to access some internal features of the TCP/IP stack. In ESP-IDF, the *Virtual filesystem component* layer is used to implement this function.

When the file descriptor is a socket, only the following ioctl() values are supported:

- FIONREAD returns the number of bytes of pending data already received in the socket's network buffer.
- FIONBIO is an alternative way to set/clear non-blocking I/O status for a socket, equivalent to fcntl(fd, F_SETFL, O_NONBLOCK, ...).

4.22.3 Netconn API

lwIP supports two lower level APIs as well as the BSD Sockets API: the Netconn API and the Raw API.

The lwIP Raw API is designed for single threaded devices and is not supported in ESP-IDF.

The Netconn API is used to implement the BSD Sockets API inside lwIP, and it can also be called directly from ESP-IDF apps. This API has lower resource usage than the BSD Sockets API, in particular it can send and receive data without needing to first copy it into internal lwIP buffers.

Important: Espressif does not test the Netconn API in ESP-IDF. As such, this functionality is *enabled but not supported*. Some functionality may only work correctly when used from the BSD Sockets API.

For more information about the Netconn API, consult lwip/lwip/src/include/lwip/api.h and this wiki page which is part of the unofficial lwIP Application Developers Manual.

4.22.4 lwIP FreeRTOS Task

lwIP creates a dedicated TCP/IP FreeRTOS task to handle socket API requests from other tasks.

A number of configuration items are available to modify the task and the queues ("mailboxes") used to send data to/from the TCP/IP task:

- *CONFIG_LWIP_TCPIP_RECVMBOX_SIZE*
- *CONFIG_LWIP_TCPIP_TASK_STACK_SIZE*
- *CONFIG_LWIP_TCPIP_TASK_AFFINITY*

4.22.5 IPv6 Support

Both IPv4 and IPv6 are supported as dual stack and enabled by default (IPv6 may be disabled if it's not needed, see *Minimum RAM usage*). IPv6 support is limited to *Stateless Autoconfiguration* only, *Stateful configuration* is not supported in ESP-IDF (not in upstream lwip). IPv6 Address configuration is defined by means of these protocols or services:

- **SLAAC** IPv6 Stateless Address Autoconfiguration (RFC-2462)
- **DHCPv6** Dynamic Host Configuration Protocol for IPv6 (RFC-8415)

None of these two types of address configuration is enabled by default, so the device uses only Link Local addresses or statically defined addresses.

Stateless Autoconfiguration Process

To enable address autoconfiguration using Router Advertisement protocol please enable:

- *CONFIG_LWIP_IPV6_AUTOCONFIG*

This configuration option enables IPv6 autoconfiguration for all network interfaces (in contrast to the upstream lwIP, where the autoconfiguration needs to be explicitly enabled for each netif with `netif->ip6_autoconfig_enabled=1`

DHCPv6

DHCPv6 in lwIP is very simple and support only stateless configuration. It could be enabled using:

- *CONFIG_LWIP_IPV6_DHCP6*

Since the DHCPv6 works only in its stateless configuration, the *Stateless Autoconfiguration Process* has to be enabled, too, by means of *CONFIG_LWIP_IPV6_AUTOCONFIG*. Moreover, the DHCPv6 needs to be explicitly enabled form the application code using

```
dhcp6_enable_stateless(netif);
```

DNS servers in IPv6 autoconfiguration

In order to autoconfigure DNS server(s), especially in IPv6 only networks, we have these two options

- Recursive domain name system –this belongs to the Neighbor Discovery Protocol (NDP), uses *Stateless Autoconfiguration Process*. Number of servers must be set *CONFIG_LWIP_IPV6_RDNSS_MAX_DNS_SERVERS*, this is option is disabled (set to 0) by default.
- DHCPv6 stateless configuration –uses *DHCPv6* to configure DNS servers. Note that the this configuration assumes IPv6 Router Advertisement Flags (RFC-5175) to be set to
  - Managed Address Configuration Flag = 0
  - Other Configuration Flag = 1

4.22.6 esp-lwip custom modifications

Additions

The following code is added which is not present in the upstream lwIP release:

Thread-safe sockets It is possible to `close()` a socket from a different thread to the one that created it. The `close()` call will block until any function calls currently using that socket from other tasks have returned.

It is, however, not possible to delete a task while it is actively waiting on `select()` or `poll()` APIs. It is always necessary that these APIs exit before destroying the task, as this might corrupt internal structures and cause subsequent crashes of the lwIP. (These APIs allocate globally referenced callback pointers on stack, so that when the task gets destroyed before unrolling the stack, the lwIP would still hold pointers to the deleted stack)

On demand timers lwIP IGMP and MLD6 features both initialize a timer in order to trigger timeout events at certain times.

The default lwIP implementation is to have these timers enabled all the time, even if no timeout events are active. This increases CPU usage and power consumption when using automatic light sleep mode. `esp-lwip` default behaviour is to set each timer "on demand" so it is only enabled when an event is pending.

To return to the default lwIP behaviour (always-on timers), disable *CONFIG_LWIP_TIMERS_ONDEMAND*.

Lwip timers API When users are not using WiFi, these APIs provide users with the ability to turn off LwIP timer to reduce power consumption.

The following API functions are supported. For full details see lwip/lwip/src/include/lwip/timeouts.h.

- `sys_timeouts_init()`
- `sys_timeouts_deinit()`

Abort TCP connections when IP changes *CONFIG_LWIP_TCP_KEEP_CONNECTION_WHEN_IP_CHANGES* is disabled by default. This disables the default lwIP behaviour of keeping TCP connections open if an interface IP changes, in case the interface IP changes back (for example, if an interface connection goes down and comes back up). Enable this option to keep TCP connections open in this case, until they time out normally. This may increase the number of sockets in use if a network interface goes down temporarily.

Additional Socket Options

- Some standard IPV4 and IPV6 multicast socket options are implemented (see *Socket Options*).
- Possible to set IPV6-only UDP and TCP sockets with `IPV6_V6ONLY` socket option (normal lwIP is TCP only).

IP layer features

- IPV4 source based routing implementation is different.
- IPV4 mapped IPV6 addresses are supported.

Limitations

Calling `send()` or `sendto()` repeatedly on a UDP socket may eventually fail with `errno` equal to `ENOMEM`. This is a limitation of buffer sizes in the lower layer network interface drivers. If all driver transmit buffers are full then UDP transmission will fail. Applications sending a high volume of UDP datagrams who don't wish for any to be dropped by the sender should check for this error code and re-send the datagram after a short delay.

Increasing the number of TX buffers in the *Wi-Fi* or *Ethernet* project configuration (as applicable) may also help.

4.22.7 Performance Optimization

TCP/IP performance is a complex subject, and performance can be optimized towards multiple goals. The default settings of ESP-IDF are tuned for a compromise between throughput, latency, and moderate memory usage.

Maximum throughput

Espressif tests ESP-IDF TCP/IP throughput using the wifi/iperf example in an RF sealed enclosure.

The wifi/iperf/sdkconfig.defaults file for the iperf example contains settings known to maximize TCP/IP throughput, usually at the expense of higher RAM usage. To get maximum TCP/IP throughput in an application at the expense of other factors then suggest applying settings from this file into the project sdkconfig.

Important: Suggest applying changes a few at a time and checking the performance each time with a particular application workload.

- If a lot of tasks are competing for CPU time on the system, consider that the lwIP task has configurable CPU affinity (*CONFIG_LWIP_TCPIP_TASK_AFFINITY*) and runs at fixed priority `ESP_TASK_TCPIP_PRIO` (18). Configure competing tasks to be pinned to a different core, or to run at a lower priority. See also *Built-In Task Priorities*.
- If using `select()` function with socket arguments only, setting *CONFIG_LWIP_USE_ONLY_LWIP_SELECT* will make `select()` calls faster.
- If there is enough free IRAM, select *CONFIG_LWIP_IRAM_OPTIMIZATION* to improve TX/RX throughput

If using a Wi-Fi network interface, please also refer to *Wi-Fi Buffer Usage*.

Minimum latency

Except for increasing buffer sizes, most changes which increase throughput will also decrease latency by reducing the amount of CPU time spent in lwIP functions.

- For TCP sockets, lwIP supports setting the standard `TCP_NODELAY` flag to disable Nagle's algorithm.

Minimum RAM usage

Most lwIP RAM usage is on-demand, as RAM is allocated from the heap as needed. Therefore, changing lwIP settings to reduce RAM usage may not change RAM usage at idle but can change it at peak.

- Reducing *CONFIG_LWIP_MAX_SOCKETS* reduces the maximum number of sockets in the system. This will also cause TCP sockets in the `WAIT_CLOSE` state to be closed and recycled more rapidly (if needed to open a new socket), further reducing peak RAM usage.

- Reducing *CONFIG_LWIP_TCPIP_RECVMBOX_SIZE*, *CONFIG_LWIP_TCP_RECVMBOX_SIZE* and *CONFIG_LWIP_UDP_RECVMBOX_SIZE* reduce memory usage at the expense of throughput, depending on usage.
- Disable *CONFIG_LWIP_IPV6* can save about 39 KB for firmware size and 2KB RAM when system power up and 7KB RAM when TCPIP stack running. If there is no requirement for supporting IPV6 then it can be disabled to save flash and RAM footprint.

If using Wi-Fi, please also refer to *Wi-Fi Buffer Usage*.

Peak Buffer Usage The peak heap memory that lwIP consumes is the **theoretically-maximum memory** that the lwIP driver consumes. Generally, the peak heap memory that lwIP consumes depends on:

- the memory required to create a UDP connection: lwip_udp_conn
- the memory required to create a TCP connection: lwip_tcp_conn
- the number of UDP connections that the application has: lwip_udp_con_num
- the number of TCP connections that the application has: lwip_tcp_con_num
- the TCP TX window size: lwip_tcp_tx_win_size
- the TCP RX window size: lwip_tcp_rx_win_size

So, the peak heap memory that the LwIP consumes can be calculated with the following formula:

lwip_dynamic_peek_memory = (lwip_udp_con_num * lwip_udp_conn) + (lwip_tcp_con_num * (lwip_tcp_tx_win_size + lwip_tcp_rx_win_size + lwip_tcp_conn))

Some TCP-based applications need only one TCP connection. However, they may choose to close this TCP connection and create a new one when an error (such as a sending failure) occurs. This may result in multiple TCP connections existing in the system simultaneously, because it may take a long time for a TCP connection to close, according to the TCP state machine (refer to RFC793).

4.23 OpenThread

OpenThread is a IP stack running on the 802.15.4 MAC layer which features mesh network and low power consumption.

4.23.1 Mode of the OpenThread stack

OpenThread can run under the following modes on Espressif chips:

Standalone node

The full OpenThread stack and the application layer runs on the same chip. This mode is available on chips with 15.4 radio such as ESP32-H2.

Radio Co-Processor (RCP)

The chip will be connected to another host running the OpenThread IP stack. It will send and received 15.4 packets on behalf of the host. This mode is available on chips with 15.4 radio such as ESP32-H2. The underlying transport between the chip and the host can be SPI or UART. For sake of latency, we recommend to use SPI as the underlying transport.

OpenThread host

For chips without 15.4 radio, it can be connected to an RCP and run OpenThread under host mode. This mode enables OpenThread on Wi-Fi chips such as ESP32, ESP32-S2, ESP32-S3 and ESP32-C3. The following diagram shows how devices work under different modes:

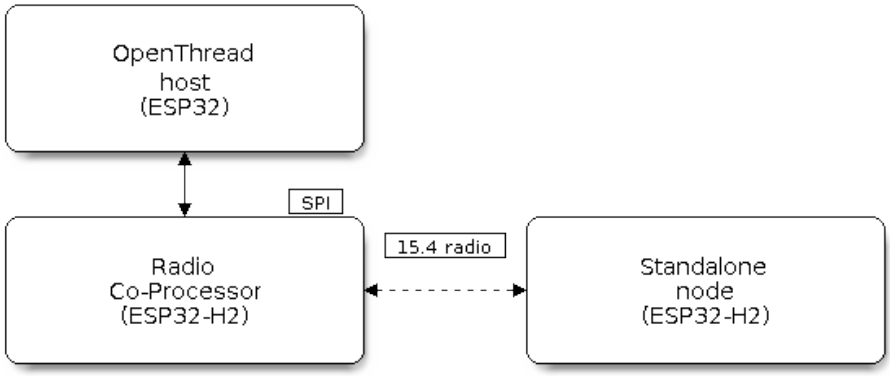

Fig. 51: OpenThread device modes

4.23.2 How To Write an OpenThread Application

The OpenThread openthread/ot_cli example will be a good place to start at. It demonstrates basic OpenThread initialization and simple socket-based server and client.

Before OpenThread initialization

- s1.1 The main task calls `esp_vfs_eventfd_register()` to initialize the eventfd virtual filesystem. The eventfd file system is used for task notification in the OpenThread driver.
- s1.2 The main task calls `nvs_flash_init()` to initialize the NVS where the Thread network data is stored.
- s1.3 **Optional**, The main task calls `esp_netif_init()` only when it wants to create the network interface for Thread.
- s1.4: The main task calls `esp_event_loop_create()` to create the system Event task and initialize an application event' s callback function.

OpenThread stack initialization

- s2.1: Call `esp_openthread_init()` to initialize the OpenThread stack.

OpenThread network interface initialization

The whole stage is **optional** and only required if the application wants to create the network interface for Thread. - s3.1: Call `esp_netif_new()` with *ESP_NETIF_DEFAULT_OPENTHREAD* to create the interface. - s3.2: Call `esp_openthread_netif_glue_init()` to create the OpenThread interface handlers. - s3.3: Call `esp_netif_attach()` to attach the handlers to the interface.

The OpenThread main loop

- s4.3: Call `esp_openthread_launch_mainloop()` to launch the OpenThread main loop. Note that this is a busy loop and will not return until the OpenThread stack is terminated.

Calling OpenThread APIs

The OpenThread APIs are not thread-safe. When calling OpenThread APIs from other tasks, make sure to hold the lock with `esp_openthread_lock_acquire()` and release the lock with

esp_openthread_lock_release() afterwards.

Deinitialization

The following steps are required to deintialize the OpenThread stack: - Call *esp_netif_destroy()* and *esp_openthread_netif_glue_deinit()* to deintialize the OpenThread network interface if you have created one. - Call *esp_openthread_deinit()* to deintialize the OpenThread stack.

4.23.3 The OpenThread border router

The OpenThread border router connects the Thread network with other IP networks. It will provide IPv6 connectivity, service registration and commission functionality. To launch an OpenThread border router on a ESP chip, you need to connect an RCP to a Wi-Fi capable chip such as ESP32. Call *esp_openthread_border_router_init()* during the initialization will launch all the border routing functionalities.

You may refer to the openthread/ot_br example and the README for further border router details.

4.24 Partition Tables

4.24.1 Overview

A single ESP32 ' s flash can contain multiple apps, as well as many different kinds of data (calibration data, filesystems, parameter storage, etc). For this reason a partition table is flashed to (*default offset*) 0x8000 in the flash.

Partition table length is 0xC00 bytes (maximum 95 partition table entries). An MD5 checksum, which is used for checking the integrity of the partition table, is appended after the table data.

Each entry in the partition table has a name (label), type (app, data, or something else), subtype and the offset in flash where the partition is loaded.

The simplest way to use the partition table is to open the project configuration menu (`idf.py menuconfig`) and choose one of the simple predefined partition tables under *CONFIG_PARTITION_TABLE_TYPE*:

- "Single factory app, no OTA"
- "Factory app, two OTA definitions"

In both cases the factory app is flashed at offset 0x10000. If you execute *idf.py partition-table* then it will print a summary of the partition table.

4.24.2 Built-in Partition Tables

Here is the summary printed for the "Single factory app, no OTA" configuration:

```
# ESP-IDF Partition Table
# Name,   Type, SubType, Offset,  Size, Flags
nvs,      data, nvs,     0x9000,  0x6000,
phy_init, data, phy,     0xf000,  0x1000,
factory,  app,  factory, 0x10000, 1M,
```

- At a 0x10000 (64 KB) offset in the flash is the app labelled "factory". The bootloader will run this app by default.
- There are also two data regions defined in the partition table for storing NVS library partition and PHY init data.

Here is the summary printed for the "Factory app, two OTA definitions" configuration:

```
# ESP-IDF Partition Table
# Name,   Type, SubType, Offset,  Size, Flags
nvs,      data, nvs,     0x9000,  0x4000,
otadata,  data, ota,     0xd000,  0x2000,
phy_init, data, phy,     0xf000,  0x1000,
factory,  app,  factory, 0x10000,  1M,
ota_0,    app,  ota_0,   0x110000, 1M,
ota_1,    app,  ota_1,   0x210000, 1M,
```

- There are now three app partition definitions. The type of the factory app (at 0x10000) and the next two "OTA" apps are all set to "app", but their subtypes are different.
- There is also a new "otadata" slot, which holds the data for OTA updates. The bootloader consults this data in order to know which app to execute. If "ota data" is empty, it will execute the factory app.

4.24.3 Creating Custom Tables

If you choose "Custom partition table CSV" in menuconfig then you can also enter the name of a CSV file (in the project directory) to use for your partition table. The CSV file can describe any number of definitions for the table you need.

The CSV format is the same format as printed in the summaries shown above. However, not all fields are required in the CSV. For example, here is the "input" CSV for the OTA partition table:

```
# Name,   Type, SubType,  Offset,   Size,  Flags
nvs,      data, nvs,      0x9000,  0x4000
otadata,  data, ota,      0xd000,  0x2000
phy_init, data, phy,      0xf000,  0x1000
factory,  app,  factory,  0x10000,  1M
ota_0,    app,  ota_0,    ,          1M
ota_1,    app,  ota_1,    ,          1M
nvs_key,  data, nvs_keys, ,         0x1000
```

- Whitespace between fields is ignored, and so is any line starting with # (comments).
- Each non-comment line in the CSV file is a partition definition.
- The "Offset" field for each partition is empty. The gen_esp32part.py tool fills in each blank offset, starting after the partition table and making sure each partition is aligned correctly.

Name field

Name field can be any meaningful name. It is not significant to the ESP32. Names longer than 16 characters will be truncated.

Type field

Partition type field can be specified as `app` (0x00) or `data` (0x01). Or it can be a number 0-254 (or as hex 0x00-0xFE). Types 0x00-0x3F are reserved for ESP-IDF core functions.

If your app needs to store data in a format not already supported by ESP-IDF, then please add a custom partition type value in the range 0x40-0xFE.

See *`esp_partition_type_t`* for the enum definitions for `app` and `data` partitions.

If writing in C++ then specifying a application-defined partition type requires casting an integer to *`esp_partition_type_t`* in order to use it with the *partition API*. For example:

```
static const esp_partition_type_t APP_PARTITION_TYPE_A = (esp_partition_type_
↪t)0x40;
```

The ESP-IDF bootloader ignores any partition types other than `app` (0x00) and `data` (0x01).

SubType

The 8-bit subtype field is specific to a given partition type. ESP-IDF currently only specifies the meaning of the subtype field for `app` and `data` partition types.

See enum *`esp_partition_subtype_t`* for the full list of subtypes defined by ESP-IDF, including the following:

- When type is `app`, the subtype field can be specified as `factory` (0x00), `ota_0` (0x10) ···`ota_15` (0x1F) or `test` (0x20).
  - `factory` (0x00) is the default app partition. The bootloader will execute the factory app unless there it sees a partition of type data/ota, in which case it reads this partition to determine which OTA image to boot.
    * OTA never updates the factory partition.
    * If you want to conserve flash usage in an OTA project, you can remove the factory partition and use `ota_0` instead.
  - `ota_0` (0x10) ···`ota_15` (0x1F) are the OTA app slots. When *OTA* is in use, the OTA data partition configures which app slot the bootloader should boot. When using OTA, an application should have at least two OTA application slots (`ota_0` & `ota_1`). Refer to the *OTA documentation* for more details.
  - `test` (0x20) is a reserved subtype for factory test procedures. It will be used as the fallback boot partition if no other valid app partition is found. It is also possible to configure the bootloader to read a GPIO input during each boot, and boot this partition if the GPIO is held low, see *Boot from Test Firmware*.
- When type is `data`, the subtype field can be specified as `ota` (0x00), `phy` (0x01), `nvs` (0x02), nvs_keys (0x04), or a range of other component-specific subtypes (see *`subtype enum`*).
  - `ota` (0) is the *OTA data partition* which stores information about the currently selected OTA app slot. This partition should be 0x2000 bytes in size. Refer to the *OTA documentation* for more details.
  - `phy` (1) is for storing PHY initialisation data. This allows PHY to be configured per-device, instead of in firmware.
    * In the default configuration, the phy partition is not used and PHY initialisation data is compiled into the app itself. As such, this partition can be removed from the partition table to save space.
    * To load PHY data from this partition, open the project configuration menu (`idf.py menuconfig`) and enable *CONFIG_ESP_PHY_INIT_DATA_IN_PARTITION* option. You will also need to flash your devices with phy init data as the esp-idf build system does not do this automatically.
  - `nvs` (2) is for the *Non-Volatile Storage (NVS) API*.
    * NVS is used to store per-device PHY calibration data (different to initialisation data).
    * NVS is used to store WiFi data if the *esp_wifi_set_storage(WIFI_STORAGE_FLASH)* initialisation function is used.
    * The NVS API can also be used for other application data.
    * It is strongly recommended that you include an NVS partition of at least 0x3000 bytes in your project.
    * If using NVS API to store a lot of data, increase the NVS partition size from the default 0x6000 bytes.
  - `nvs_keys` (4) is for the NVS key partition. See *Non-Volatile Storage (NVS) API* for more details.
    * It is used to store NVS encryption keys when *NVS Encryption* feature is enabled.
    * The size of this partition should be 4096 bytes (minimum partition size).
  - There are other predefined data subtypes for data storage supported by ESP-IDF. These include *FAT filesystem* (*`ESP_PARTITION_SUBTYPE_DATA_FAT`*), *SPIFFS* (*`ESP_PARTITION_SUBTYPE_DATA_SPIFFS`*), etc.

  Other subtypes of `data` type are reserved for future ESP-IDF uses.
- If the partition type is any application-defined value (range 0x40-0xFE), then `subtype` field can be any value chosen by the application (range 0x00-0xFE).
  Note that when writing in C++, an application-defined subtype value requires casting to type *`esp_partition_subtype_t`* in order to use it with the *partition API*.

Offset & Size

Partitions with blank offsets in the CSV file will start after the previous partition, or after the partition table in the case of the first partition.

Partitions of type `app` have to be placed at offsets aligned to 0x10000 (64K). If you leave the offset field blank, `gen_esp32part.py` will automatically align the partition. If you specify an unaligned offset for an app partition,

the tool will return an error.

Sizes and offsets can be specified as decimal numbers, hex numbers with the prefix 0x, or size multipliers K or M (1024 and 1024*1024 bytes).

If you want the partitions in the partition table to work relative to any placement (*CONFIG_PARTITION_TABLE_OFFSET*) of the table itself, leave the offset field (in CSV file) for all partitions blank. Similarly, if changing the partition table offset then be aware that all blank partition offsets may change to match, and that any fixed offsets may now collide with the partition table (causing an error).

Flags

Only one flag is currently supported, `encrypted`. If this field is set to `encrypted`, this partition will be encrypted if *Flash Encryption* is enabled.

Note: `app` type partitions will always be encrypted, regardless of whether this flag is set or not.

4.24.4 Generating Binary Partition Table

The partition table which is flashed to the ESP32 is in a binary format, not CSV. The tool partition_table/gen_esp32part.py is used to convert between CSV and binary formats.

If you configure the partition table CSV name in the project configuration (`idf.py menuconfig`) and then build the project or run `idf.py partition-table`, this conversion is done as part of the build process.

To convert CSV to Binary manually:

```
python gen_esp32part.py input_partitions.csv binary_partitions.bin
```

To convert binary format back to CSV manually:

```
python gen_esp32part.py binary_partitions.bin input_partitions.csv
```

To display the contents of a binary partition table on stdout (this is how the summaries displayed when running `idf.py partition-table` are generated:

```
python gen_esp32part.py binary_partitions.bin
```

4.24.5 Partition Size Checks

The ESP-IDF build system will automatically check if generated binaries fit in the available partition space, and will fail with an error if a binary is too large.

Currently these checks are performed for the following binaries:

- Bootloader binary must fit in space before partition table (see *Bootloader Size*).
- App binary should fit in at least one partition of type "app". If the app binary doesn't fit in any app partition, the build will fail. If it only fits in some of the app partitions, a warning is printed about this.

Note: Although the build process will fail if the size check returns an error, the binary files are still generated and can be flashed (although they may not work if they are too large for the available space.)

Note: Build system binary size checks are only performed when using the CMake build system. When using the legacy GNU Make build system, file sizes can be checked manually or an error will be logged during boot.

MD5 checksum

The binary format of the partition table contains an MD5 checksum computed based on the partition table. This checksum is used for checking the integrity of the partition table during the boot.

The MD5 checksum generation can be disabled by the `--disable-md5sum` option of `gen_esp32part.py` or by the *CONFIG_PARTITION_TABLE_MD5* option. This is useful for example when one *uses a bootloader from ESP-IDF before v3.1* which cannot process MD5 checksums and the boot fails with the error message `invalid magic number 0xebeb`.

4.24.6 Flashing the partition table

- `idf.py partition-table-flash`: will flash the partition table with esptool.py.
- `idf.py flash`: Will flash everything including the partition table.

A manual flashing command is also printed as part of `idf.py partition-table` output.

Note: Note that updating the partition table doesn't erase data that may have been stored according to the old partition table. You can use `idf.py erase-flash` (or `esptool.py erase_flash`) to erase the entire flash contents.

4.24.7 Partition Tool (parttool.py)

The component *partition_table* provides a tool parttool.py for performing partition-related operations on a target device. The following operations can be performed using the tool:

- reading a partition and saving the contents to a file (read_partition)
- writing the contents of a file to a partition (write_partition)
- erasing a partition (erase_partition)
- retrieving info such as name, offset, size and flag ("encrypted") of a given partition (get_partition_info)

The tool can either be imported and used from another Python script or invoked from shell script for users wanting to perform operation programmatically. This is facilitated by the tool's Python API and command-line interface, respectively.

Python API

Before anything else, make sure that the *parttool* module is imported.

```
import sys
import os

idf_path = os.environ["IDF_PATH"]  # get value of IDF_PATH from environment
parttool_dir = os.path.join(idf_path, "components", "partition_table")  # parttool.
↪py lives in $IDF_PATH/components/partition_table

sys.path.append(parttool_dir)  # this enables Python to find parttool module
from parttool import *  # import all names inside parttool module
```

The starting point for using the tool's Python API to do is create a *ParttoolTarget* object:

```
# Create a partool.py target device connected on serial port /dev/ttyUSB1
target = ParttoolTarget("/dev/ttyUSB1")
```

The created object can now be used to perform operations on the target device:

```
# Erase partition with name 'storage'
target.erase_partition(PartitionName("storage"))

# Read partition with type 'data' and subtype 'spiffs' and save to file 'spiffs.bin
↪'
target.read_partition(PartitionType("data", "spiffs"), "spiffs.bin")

# Write to partition 'factory' the contents of a file named 'factory.bin'
target.write_partition(PartitionName("factory"), "factory.bin")

# Print the size of default boot partition
storage = target.get_partition_info(PARTITION_BOOT_DEFAULT)
print(storage.size)
```

The partition to operate on is specified using *PartitionName* or *PartitionType* or PARTITION_BOOT_DEFAULT. As the name implies, these can be used to refer to partitions of a particular name, type-subtype combination, or the default boot partition.

More information on the Python API is available in the docstrings for the tool.

Command-line Interface

The command-line interface of *parttool.py* has the following structure:

```
parttool.py [command-args] [subcommand] [subcommand-args]

- command-args - These are arguments that are needed for executing the main␣
↪command (parttool.py), mostly pertaining to the target device
- subcommand - This is the operation to be performed
- subcommand-args - These are arguments that are specific to the chosen operation
```

```
# Erase partition with name 'storage'
parttool.py --port "/dev/ttyUSB1" erase_partition --partition-name=storage

# Read partition with type 'data' and subtype 'spiffs' and save to file 'spiffs.bin
↪'
parttool.py --port "/dev/ttyUSB1" read_partition --partition-type=data --partition-
↪subtype=spiffs --output "spiffs.bin"

# Write to partition 'factory' the contents of a file named 'factory.bin'
parttool.py --port "/dev/ttyUSB1" write_partition --partition-name=factory --input
↪"factory.bin"

# Print the size of default boot partition
parttool.py --port "/dev/ttyUSB1" get_partition_info --partition-boot-default --
↪info size
```

More information can be obtained by specifying *–help* as argument:

```
# Display possible subcommands and show main command argument descriptions
parttool.py --help

# Show descriptions for specific subcommand arguments
parttool.py [subcommand] --help
```

4.25 Performance

ESP-IDF ships with default settings that are designed for a trade-off between performance, resource usage, and available functionality.

These guides describe how to optimize a firmware application for a particular aspect of performance. Usually this involves some trade-off in terms of limiting available functions, or swapping one aspect of performance (such as execution speed) for another (such as RAM usage).

4.25.1 How to Optimize Performance

1. Decide what the performance-critical aspects of your application are (for example: a particular response time to a certain network operation, a particular startup time limit, particular peripheral data throughput, etc.).
2. Find a way to measure this performance (some methods are outlined in the guides below).
3. Modify the code and project configuration and compare the new measurement to the old measurement.
4. Repeat step 3 until the performance meets the requirements set out in step 1.

4.25.2 Guides

Maximizing Execution Speed

Overview Optimizing execution speed is a key element of software performance. Code that executes faster can also have other positive effects, like reducing overall power consumption. However, improving execution speed may have trade-offs with other aspects of performance such as *Minimizing Binary Size*.

Choose What To Optimize If a function in the application firmware is executed once per week in the background, it may not matter if that function takes 10 ms or 100 ms to execute. If a function is executed constantly at 10 Hz, it matters greatly if it takes 10 ms or 100 ms to execute.

Most application firmwares will only have a small set of functions which require optimal performance. Perhaps those functions are executed very often, or have to meet some application requirements for latency or throughput. Optimization efforts should be targeted at these particular functions.

Measuring Performance The first step to improving something is to measure it.

Basic Performance Measurements If measuring performance relative to an external interaction with the world, you may be able to measure this directly (for example see the examples wifi/iperf and ethernet/iperf for measuring general network performance, or you can use an oscilloscope or logic analyzer to measure timing of an interaction with a device peripheral.)

Otherwise, one way to measure performance is to augment the code to take timing measurements:

```
#include "esp_timer.h"

void measure_important_function(void) {
    const unsigned MEASUREMENTS = 5000;
    uint64_t start = esp_timer_get_time();

    for (int retries = 0; retries < MEASUREMENTS; retries++) {
        important_function(); // This is the thing you need to measure
    }

    uint64_t end = esp_timer_get_time();

    printf("%u iterations took %ull milliseconds (%ull microseconds per␣
↪invocation)\n",
           MEASUREMENTS, (end - start)/1000, (end - start)/MEASUREMENTS);
}
```

Executing the target multiple times can help average out factors like RTOS context switches, overhead of measurements, etc.

- Using *esp_timer_get_time()* generates "wall clock" timestamps with microsecond precision, but has moderate overhead each time the timing functions are called.
- It's also possible to use the standard Unix `gettimeofday()` and `utime()` functions, although the overhead is slightly higher.
- Otherwise, including `hal/cpu_hal.h` and calling the HAL function `cpu_hal_get_cycle_count()` will return the number of CPU cycles executed. This function has lower overhead than the others. It is good for measuring very short execution times with high precision.
  The CPU cycles are counted per-core, so only use this method from an interrupt handler, or a task that is pinned to a single core.
- If making "microbenchmarks" (i.e. benchmarking only a very small routine of code that runs in less than 1-2 milliseconds) then flash cache performance can sometimes cause big variations in timing measurements depending on the binary. This happens because binary layout can cause different patterns of cache misses in a particular sequence of execution. If the test code is larger then this effect usually averages out. Executing a small function multiple times when benchmarking can help reduce the impact of flash cache misses. Alternatively, move this code to IRAM (see *Targeted Optimizations*).

External Tracing The *Application Level Tracing library* allows measuring code execution with minimal impact on the code itself.

Tasks If the option *CONFIG_FREERTOS_GENERATE_RUN_TIME_STATS* is enabled then the FreeRTOS API *vTaskGetRunTimeStats()* can be used to retrieve runtime information about the processor time used by each FreeRTOS task.

SEGGER SystemView is an excellent tool for visualizing task execution and looking for performance issues or improvements in the system as a whole.

Improving Overall Speed The following optimizations will improve the execution of nearly all code - including boot times, throughput, latency, etc:

- Set *CONFIG_ESPTOOLPY_FLASHFREQ* to 80 MHz. This is double the 40 MHz default value and will double the speed at which code is loaded or executed from flash. You should verify that the board or module that connects the ESP32 to the flash chip is rated for 80 MHz operation at the relevant temperature ranges, before changing this setting. The hardware datasheet(s) will have this information.
- Set *CONFIG_ESPTOOLPY_FLASHMODE* to QIO or QOUT mode (Quad I/O). Both will almost double the speed at which code is loaded or executed from flash compared to the default DIO mode. QIO is slightly faster than QOUT if both are supported. Note that both the flash chip model and the electrical connections between the ESP32 and the flash chip must support quad I/O modes or the SoC will not work correctly.
- Set *CONFIG_COMPILER_OPTIMIZATION* to "Optimize for performance (-O2)". This may slightly increase binary size compared to the default setting, but will almost certainly increase performance of some code. Note that if your code contains C or C++ Undefined Behaviour then increasing the compiler optimization level may expose bugs that otherwise are not seen.
- Avoid using floating point arithmetic (`float`). Even though ESP32 has a single precision hardware floating point unit, floating point calculations are always slower than integer calculations. If possible then use fixed point representations, a different method of integer representation, or convert part of the calculation to be integer only before switching to floating point.
- Avoid using double precision floating point arithmetic (`double`). These calculations are emulated in software and are very slow. If possible then use an integer-based representation, or single-precision floating point.

Reduce Logging Overhead Although standard output is buffered, it's possible for an application to be limited by the rate at which it can print data to log output once buffers are full. This is particularly relevant for startup time if a lot of output is logged, but can happen at other times as well. There are multiple ways to solve this problem:

- Reduce the volume of log output by lowering the app *CONFIG_LOG_DEFAULT_LEVEL* (the equivalent bootloader setting is *CONFIG_BOOTLOADER_LOG_LEVEL*). This also reduces the binary size, and saves some CPU time spent on string formatting.
- Increase the speed of logging output by increasing the *CONFIG_ESP_CONSOLE_UART_BAUDRATE*

Not Recommended The following options will also increase execution speed, but are not recommended as they also reduce the debuggability of the firmware application and may increase the severity of any bugs.

- Set *CONFIG_COMPILER_OPTIMIZATION_ASSERTION_LEVEL* to disabled. This also reduces firmware binary size by a small amount. However, it may increase the severity of bugs in the firmware including security-related bugs. If necessary to do this to optimize a particular function, consider adding `#define NDEBUG` in the top of that single source file instead.

Targeted Optimizations The following changes will increase the speed of a chosen part of the firmware application:

- Move frequently executed code to IRAM. By default, all code in the app is executed from flash cache. This means that it's possible for the CPU to have to wait on a "cache miss" while the next instructions are loaded from flash. Functions which are copied into IRAM are loaded once at boot time, and then will always execute at full speed.
  IRAM is a limited resource, and using more IRAM may reduce available DRAM, so a strategic approach is needed when moving code to IRAM. See *IRAM (Instruction RAM)* for more information.
- Jump table optimizations can be re-enabled for individual source files that don't need to be placed in IRAM. For hot paths in large switch cases this will improve performance. For instructions on how to add the -fjump-tables -ftree-switch-conversion options when compiling individual source files, see *Controlling Component Compilation*

Improving Startup Time In addition to the overall performance improvements shown above, the following options can be tweaked to specifically reduce startup time:

- Minimizing the *CONFIG_LOG_DEFAULT_LEVEL* and *CONFIG_BOOTLOADER_LOG_LEVEL* has a large impact on startup time. To enable more logging after the app starts up, set the *CONFIG_LOG_MAXIMUM_LEVEL* as well and then call `esp_log_set_level()` to restore higher level logs. The system/startup_time main function shows how to do this.
- If using deep sleep, setting *CONFIG_BOOTLOADER_SKIP_VALIDATE_IN_DEEP_SLEEP* allows a faster wake from sleep. Note that if using Secure Boot this represents a security compromise, as Secure Boot validation will not be performed on wake.
- Setting *CONFIG_BOOTLOADER_SKIP_VALIDATE_ON_POWER_ON* will skip verifying the binary on every boot from power-on reset. How much time this saves depends on the binary size and the flash settings. Note that this setting carries some risk if the flash becomes corrupt unexpectedly. Read the help text of the *config item* for an explanation and recommendations if using this option.
- It's possible to save a small amount of time during boot by disabling RTC slow clock calibration. To do so, set *CONFIG_ESP32_RTC_CLK_CAL_CYCLES* to 0. Any part of the firmware that uses RTC slow clock as a timing source will be less accurate as a result.

The example project system/startup_time is pre-configured to optimize startup time. The files system/startup_time/sdkconfig.defaults and system/startup_time/sdkconfig.defaults.esp32 contain all of these settings. You can append these to the end of your project's own `sdkconfig` file to merge the settings, but please read the documentation for each setting first.

Task Priorities As ESP-IDF FreeRTOS is a real-time operating system, it's necessary to ensure that high throughput or low latency tasks are granted a high priority in order to run immediately. Priority is set when calling *`xTaskCreate()`* or *`xTaskCreatePinnedToCore()`* and can be changed at runtime by calling *`vTaskPrioritySet()`*.

It's also necessary to ensure that tasks yield CPU (by calling `vTaskDelay()`, `sleep()`, or by blocking on semaphores, queues, task notifications, etc) in order to not starve lower priority tasks and cause problems for the overall system. The *Task Watchdog Timer* provides a mechanism to automatically detect if task starvation happens, however note that a Task WDT timeout does not always indicate a problem (sometimes the correct operation of the firmware requires some long-running computation). In these cases tweaking the Task WDT timeout or even disabling the Task WDT may be necessary.

Built-In Task Priorities ESP-IDF starts a number of system tasks at fixed priority levels. Some are automatically started during the boot process, some are started only if the application firmware initializes a particular feature. To optimize performance, structure application task priorities so that they are not delayed by system tasks, while also not starving system tasks and impacting other functions of the system.

This may require splitting up a particular task. For example, perform a time-critical operation in a high priority task or an interrupt handler and do the non-time-critical part in a lower priority task.

Header components/esp_system/include/esp_task.h contains macros for the priority levels used for built-in ESP-IDF tasks system.

Common priorities are:

- *Main task that executes app_main function* has minimum priority (1). This task is pinned to Core 0 by default (*configurable*).
- *High Resolution Timer* system task to manage high precision timer events and execute callbacks has high priority (22, `ESP_TASK_TIMER_PRIO`). This task is pinned to Core 0.
- FreeRTOS Timer Task to handle FreeRTOS timer callbacks is created when the scheduler initializes and has minimum task priority (1, *configurable*). This task is pinned to Core 0.
- *Event Handling* system task to manage the default system event loop and execute callbacks has high priority (20, `ESP_TASK_EVENT_PRIO`) and pinned to Core 0. This configuration is only used if the application calls `esp_event_loop_create_default()`, it's possible to call `esp_event_loop_create()` with a custom task configuration instead.
- *lwIP* TCP/IP task has high priority (18, `ESP_TASK_TCPIP_PRIO`) and is not pinned to any core (*configurable*).
- *Wi-Fi Driver* task has high priority (23) and is pinned to Core 0 by default (*configurable*).
- Wi-Fi wpa_supplicant component may create dedicated tasks while the Wi-Fi Protected Setup (WPS), WPA2 EAP-TLS, Device Provisioning Protocol (DPP) or BSS Transition Management (BTM) features are in use. These tasks all have low priority (2) and are not pinned to any core.
- *Bluetooth Controller* task has high priority (23, `ESP_TASK_BT_CONTROLLER_PRIO`) and is pinned to Core 0 by default (*configurable*). The Bluetooth Controller needs to respond to requests with low latency, so it should always be close to the highest priority task assigned to a single CPU.
- *NimBLE Bluetooth Host* host task has high priority (21) and is pinned to Core 0 by default (*configurable*).
- ***Bluedroid Bluetooth Host* creates multiple tasks when used:**
  - Stack event callback task ("BTC") has high priority (19).
  - Stack BTU layer task has high priority (20).
  - Host HCI host task has high priority (22).

  All Bluedroid Tasks are pinned to the same core, which is Core 0 by default (*configurable*).
- The Ethernet driver creates a task for the MAC to receive Ethernet frames. If using the default config `ETH_MAC_DEFAULT_CONFIG` then the priority is medium-high (15) and the task is not pinned to any core. These settings can be changed by passing a custom `eth_mac_config_t` struct when initializing the Ethernet MAC.
- If using the *mDNS* component, it creates a task with default low priority 1 (*configurable*) and pinned to CPU0 (*configurable*).
- If using the *MQTT* component, it creates a task with default priority 5 (*configurable*, depends on *CONFIG_MQTT_USE_CUSTOM_CONFIG*) and not pinned to any core (*configurable*).

Choosing application task priorities With a few exceptions (most importantly the lwIP TCP/IP task), in the default configuration most built-in tasks are pinned to Core 0. This makes it quite easy for the application to place high priority tasks on Core 1. Using priority 19 or higher will guarantee an application task can run on Core 1 without

being preempted by any built-in task. To further isolate the tasks running on each CPU, configure the *lwIP task* to only run on Core 0 instead of either core (this may reduce total TCP/IP throughput depending on what other tasks are running).

In general, it's not recommended to set task priorities on Core 0 higher than the built-in Wi-Fi/BT operations as starving them of CPU may make the system unstable. Choosing priority 19 and Core 0 will allow lower layer Wi-Fi/BT functionality to run without delays, but still pre-empts the lwIP TCP/IP stack and other less time-critical internal functionality - this is an option for time-critical tasks that don't perform network operations. Any task that does TCP/IP network operations should run at lower priority than the lwIP TCP/IP task (18) to avoid priority inversion issues.

Note: Setting a task to always run in preference to built-in ESP-IDF tasks does not require pinning to Core 1. The task can be left unpinned - at priority 17 or lower - to optionally run on Core 0 as well, if no higher priority built-in task is running there. Using unpinned tasks can improve the overall CPU utilization, however it makes reasoning about task scheduling more complex.

Note: Task execution is always completely suspended when writing to the built-in SPI flash chip. Only *IRAM-Safe Interrupt Handlers* will continue executing.

Improving Interrupt Performance ESP-IDF supports dynamic *Interrupt allocation* with interrupt preemption. Each interrupt in the system has a priority, and higher priority interrupts will preempt lower priority ones.

Interrupt handlers will execute in preference to any task (provided the task is not inside a critical section). For this reason, it's important to minimize the amount of time spent executing in an interrupt handler.

To obtain the best performance for a particular interrupt handler:

- Assign more important interrupts a higher priority using a flag such as `ESP_INTR_FLAG_LEVEL2` or `ESP_INTR_FLAG_LEVEL3` when calling `esp_intr_alloc()`.
- Assign the interrupt on a CPU where built-in Wi-Fi/BT tasks are not configured to run (this means assigning on Core 1 by default, see *Built-In Task Priorities*). Interrupts are assigned on the same CPU where the `esp_intr_alloc()` function call is made.
- If you're sure the entire interrupt handler can run from IRAM (see *IRAM-Safe Interrupt Handlers*) then set the `ESP_INTR_FLAG_IRAM` flag when calling `esp_intr_alloc()` to assign the interrupt. This prevents it being temporarily disabled if the application firmware writes to the internal SPI flash.
- Even if the interrupt handler is not IRAM safe, if it is going to be executed frequently then consider moving the handler function to IRAM anyhow. This minimizes the chance of a flash cache miss when the interrupt code is executed (see *Targeted Optimizations*). It's possible to do this without adding the `ESP_INTR_FLAG_IRAM` flag to mark the interrupt as IRAM-safe, if only part of the handler is guaranteed to be in IRAM.

Improving Network Speed

- For Wi-Fi, see *How to improve Wi-Fi performance* and *Wi-Fi Buffer Usage*
- For lwIP TCP/IP (Wi-Fi and Ethernet), see *Performance Optimization*
- The wifi/iperf example contains a configuration that is heavily optimized for Wi-Fi TCP/IP throughput. Append the contents of the files wifi/iperf/sdkconfig.defaults, wifi/iperf/sdkconfig.defaults.esp32 and wifi/iperf/sdkconfig.ci.99 to your project `sdkconfig` file in order to add all of these options. Note that some of these options may have trade-offs in terms of reduced debuggability, increased firmware size, increased memory usage, or reduced performance of other features. To get the best result, read the documentation pages linked above and use this information to determine exactly which options are best suited for your app.

Minimizing Binary Size

The ESP-IDF build system compiles all source files in the project and ESP-IDF, but only functions and variables that are actually referenced by the program are linked into the final binary. In some cases, it is necessary to reduce the total size of the firmware binary (for example, in order to fit it into the available flash partition size).

The first step to reducing the total firmware binary size is measuring what is causing the size to increase.

Measuring Static Sizes To optimize both firmware binary size and memory usage it's necessary to measure statically allocated RAM ("data", "bss"), code ("text") and read-only data ("rodata") in your project.

Using the *idf.py* sub-commands `size`, `size-components` and `size-files` provides a summary of memory used by the project:

Size Summary (idf.py size)

```
$ idf.py size
[...]
    Total sizes:
 DRAM .data size:   14956 bytes
 DRAM .bss  size:   15808 bytes
Used static DRAM:   30764 bytes ( 149972 available, 17.0% used)
Used static IRAM:   83918 bytes (  47154 available, 64.0% used)
      Flash code:  559943 bytes
    Flash rodata:  176736 bytes
Total image size:~ 835553 bytes (.bin may be padded larger)
```

This output breaks down the size of all static memory regions in the firmware binary:

- `DRAM .data size` is statically allocated RAM that is assigned to non-zero values at startup. This uses RAM (DRAM) at runtime and also uses space in the binary file.
- `DRAM .bss size` is statically allocated RAM that is assigned zero at startup. This uses RAM (DRAM) at runtime but doesn't use any space in the binary file.
- `Used static DRAM` is the total DRAM used by .data + .bss. The `available` size is the estimated amount of DRAM which will be available as heap memory at runtime (due to metadata overhead and implementation constraints, and heap allocations done by ESP-IDF during startup, the actual free heap at startup will be lower than this).
- `Used static IRAM` is the total size of executable code *executed from IRAM*. This uses space in the binary file and also reduces IRAM and/or DRAM (depending on sizes) available as heap memory at runtime. See *Optimizing IRAM Usage*.
- `Flash code` is the total size of executable code executed from flash cache (*IROM*). This uses space in the binary file.
- `Flash rodata` is the total size of read-only data loaded from flash cache (*DROM*). This uses space in the binary file.
- `Total image size` is the estimated total binary file size, which is the total of all the used memory types except for .bss.

Component Usage Summary (idf.py size-components) The summary output provided by `idf.py size` does not give enough detail to find the main contributor to excessive binary size. To analyze in more detail, use `idf.py size-components`

```
$ idf.py size-components
[...]
    Total sizes:
 DRAM .data size:   14956 bytes
 DRAM .bss  size:   15808 bytes
Used static DRAM:   30764 bytes ( 149972 available, 17.0% used)
```

(continues on next page)

(continued from previous page)

```
Used static IRAM:   83918 bytes (  47154 available, 64.0% used)
      Flash code:  559943 bytes
    Flash rodata:  176736 bytes
Total image size:~ 835553 bytes (.bin may be padded larger)
Per-archive contributions to ELF file:
          Archive File DRAM .data & .bss & other   IRAM   D/IRAM Flash code &␣
↪rodata   Total
          libnet80211.a       1267   6044       0   5490        0     107445   ␣
↪18484  138730
              liblwip.a         21   3838       0      0        0      97465   ␣
↪16116  117440
           libmbedtls.a         60    524       0      0        0      27655   ␣
↪69907   98146
         libmbedcrypto.a        64     81       0     30        0      76645   ␣
↪11661   88481
               libpp.a       2427   1292       0  20851        0      37208    ␣
↪4708   66486
                libc.a          4      0       0      0        0      57056    ␣
↪6455   63515
               libphy.a       1439    715       0   7798        0      33074     ␣
↪  0   43026
    libwpa_supplicant.a         12    848       0      0        0      35505    ␣
↪1446   37811
          libfreertos.a       3104    740       0  15711        0        367    ␣
↪4228   24150
         libnvs_flash.a          0     24       0      0        0      14347    ␣
↪2924   17295
         libspi_flash.a       1562    294       0   8851        0       1840    ␣
↪1913   14460
         libesp_system.a       245    206       0   3078        0       5990    ␣
↪3817   13336
           libesp-tls.a          0      4       0      0        0       5637    ␣
↪3524    9165
[... removed some lines here ...]
      libtcpip_adapter.a          0     17       0      0        0        216     ␣
↪  0     233
           libesp_rom.a          0      0       0    112        0          0     ␣
↪  0     112
               libcxx.a          0      0       0      0        0         47     ␣
↪  0      47
                  (exe)          0      0       0      3        0          3     ␣
↪ 12      18
             libesp_pm.a          0      0       0      0        0          8     ␣
↪  0       8
           libesp_eth.a          0      0       0      0        0          0     ␣
↪  0       0
              libmesh.a          0      0       0      0        0          0     ␣
↪  0       0
```

The first lines of output from `idf.py size-components` are the same as `idf.py size`. After this a table is printed of "per-archive contributions to ELF file". This means how much each static library archive has contributed to the final binary size.

Generally, one static library archive is built per component, although some are binary libraries included by a particular component (for example, `libnet80211.a` is included by `esp_wifi` component). There are also toolchain libraries such as `libc.a` and `libgcc.a` listed here, these provide Standard C/C++ Library and toolchain built-in functionality.

If your project is simple and only has a "main" component, then all of the project's code will be shown under `libmain.a`. If your project includes its own components (see *Build System*), then they will each be shown on a separate line.

The table is sorted in descending order of the total contribution to the binary size.

The columns are as follows:

- `DRAM .data & .bss & other` - .data and .bss are the same as for the totals shown above (static variables, these both reduce total available RAM at runtime but .bss doesn't contribute to the binary file size). "other" is a column for any custom section types that also contribute to RAM size (usually this value is 0).
- `IRAM` - is the same as for the totals shown above (code linked to execute from IRAM, uses space in the binary file and also reduces IRAM that can be dynamically allocated at runtime using `HEAP_CAP_32BIT`.
- `D/IRAM` - Shows IRAM space which, due to occupying D/IRAM space, is also reducing available DRAM available as heap at runtime.
- `Flash code & rodata` - these are the same as the totals above, IROM and DROM space accessed from flash cache that contribute to the binary size.

Source File Usage Summary (idf.py size-files) For even more detail, run `idf.py size-files` to get a summary of the contribution each object file has made to the final binary size. Each object file corresponds to a single source file.

```
$ idf.py size-files
[...]
Total sizes:
 DRAM .data size:   14956 bytes
 DRAM .bss  size:   15808 bytes
Used static DRAM:   30764 bytes ( 149972 available, 17.0% used)
Used static IRAM:   83918 bytes (  47154 available, 64.0% used)
      Flash code:  559943 bytes
    Flash rodata:  176736 bytes
Total image size:~ 835553 bytes (.bin may be padded larger)
Per-file contributions to ELF file:
             Object File DRAM .data & .bss & other   IRAM   D/IRAM Flash code &␣
↪rodata   Total
     x509_crt_bundle.S.o          0      0       0      0        0           0   ␣
↪64212   64212
                wl_cnx.o          2   3183       0    221        0       13119   ␣
↪3286   19811
           phy_chip_v7.o        721    614       0   1642        0       16820   ␣
↪  0   19797
       ieee80211_ioctl.o        740     96       0    437        0       15325   ␣
↪2627   19225
                    pp.o       1142     45       0   8871        0        5030   ␣
↪537   15625
      ieee80211_output.o          2     20       0   2118        0       11617   ␣
↪914   14671
         ieee80211_sta.o          1     41       0   1498        0       10858   ␣
↪2218   14616
        lib_a-vfprintf.o          0      0       0      0        0       13829   ␣
↪752   14581
       lib_a-svfprintf.o          0      0       0      0        0       13251   ␣
↪752   14003
             ssl_tls.c.o         60      0       0      0        0       12769   ␣
↪463   13292
             sockets.c.o          0    648       0      0        0       11096   ␣
↪1030   12774
                nd6.c.o          8    932       0      0        0       11515   ␣
↪314   12769
       phy_chip_v7_cal.o        477     53       0   3499        0        8561   ␣
↪  0   12590
                    pm.o         32    364       0   2673        0        7788   ␣
↪782   11639
         ieee80211_scan.o         18    288       0      0        0        8889   ␣
↪1921   11116
```

(continues on next page)

(continued from previous page)

```
      lib_a-svfiprintf.o           0       0       0       0       0        9654
↪1206    10860
       lib_a-vfiprintf.o           0       0       0       0       0       10069
↪734    10803
         ieee80211_ht.o            0       4       0    1186       0        8628
↪898    10716
       phy_chip_v7_ana.o         241      48       0    2657       0        7677
↪  0    10623
             bignum.c.o            0       4       0       0       0        9652
↪752    10408
             tcp_in.c.o            0      52       0       0       0        8750
↪1282    10084
                 trc.o          664      88       0    1726       0        6245
↪1108     9831
              tasks.c.o            8     704       0    7594       0           0
↪1475     9781
           ecp_curves.c.o         28       0       0       0       0        7384
↪2325     9737
                ecp.c.o            0      64       0       0       0        8864
↪286     9214
      ieee80211_hostap.o           1      41       0       0       0        8578
↪585     9205
                wdev.o           121     125       0    4499       0        3684
↪580     9009
            tcp_out.c.o            0       0       0       0       0        5686
↪2161     7847
                tcp.c.o            2      26       0       0       0        6161
↪1617     7806
       ieee80211_input.o           0       0       0       0       0        6797
↪973     7770
                wpa.c.o            0     656       0       0       0        6828
↪ 55     7539
[... additional lines removed ...]
```

After the summary of total sizes, a table of "Per-file contributions to ELF file" is printed.

The columns are the same as shown above for `idy.py size-components`, but this time the granularity is the contribution of each individual object file to the binary size.

For example, we can see that the file `x509_crt_bundle.S.o` contributed 64212 bytes to the total firmware size, all as `.rodata` in flash. Therefore we can guess that this application is using the *ESP x509 Certificate Bundle* feature and not using this feature would save at last this many bytes from the firmware size.

Some of the object files are linked from binary libraries and therefore you won't find a corresponding source file. To locate which component a source file belongs to, it's generally possible to search in the ESP-IDF source tree or look in the *Linker Map File* for the full path.

Comparing Two Binaries If making some changes that affect binary size, it's possible to use an ESP-IDF tool to break down the exact differences in size.

This operation isn't part of `idf.py`, it's necessary to run the `idf-size.py` Python tool directly.

To do so, first locate the linker map file in the build directory. It will have the name `PROJECTNAME.map`. The `idf-size.py` tool performs its analysis based on the output of the linker map file.

To compare with another binary, you will also need its corresponding `.map` file saved from the build directory.

For example, to compare two builds: one with the default *CONFIG_COMPILER_OPTIMIZATION* setting "Debug (-Og)" configuration and one with "Optimize for size (-Os)":

```
$ $IDF_PATH/tools/idf_size.py --diff build_Og/https_request.map build_Os/https_
↪request.map
<CURRENT> MAP file: build_Os/https_request.map
<REFERENCE> MAP file: build_Og/https_request.map
Difference is counted as <CURRENT> - <REFERENCE>, i.e. a positive number means␣
↪that <CURRENT> is larger.
Total sizes of <CURRENT>:
↪<REFERENCE>     Difference
 DRAM .data size:   14516 bytes                                                ␣
↪14956           -440
 DRAM .bss  size:   15792 bytes                                                ␣
↪15808            -16
Used static DRAM:   30308 bytes ( 150428 available, 16.8% used)                ␣
↪30764           -456 (   +456 available,      +0 total)
Used static IRAM:   78498 bytes (  52574 available, 59.9% used)                ␣
↪83918          -5420 (  +5420 available,      +0 total)
      Flash code:  509183 bytes                                               ␣
↪559943         -50760
    Flash rodata:  170592 bytes                                               ␣
↪176736          -6144
Total image size:~ 772789 bytes (.bin may be padded larger)                    ␣
↪835553         -62764
```

We can see from the "Difference" column that changing this one setting caused the whole binary to be over 60 KB smaller and over 5 KB more RAM is available.

It's also possible to use the "diff" mode to output a table of component-level (static library archive) differences:

```
$IDF_PATH/tools/idf_size.py --archives --diff build_Og/https_request.map build_
↪Oshttps_request.map
```

Also at the individual source file level:

```
$IDF_PATH/tools/idf_size.py --files --diff build_Og/https_request.map build_
↪Oshttps_request.map
```

Other options (like writing the output to a file) are available, pass `--help` to see the full list.

Showing Size When Linker Fails If too much static memory is used, then the linker will fail with an error such as `DRAM segment data does not fit, region `iram0_0_seg' overflowed by 44 bytes`, or similar.

In these cases, `idf.py size` will not succeed either. However it is possible to run `idf_size.py` manually in order to view the *partial static memory usage* (the memory usage will miss the variables which could not be linked, so there still appears to be some free space.)

The map file argument is `<projectname>.map` in the build directory

```
$IDF_PATH/tools/idf_size.py build/project_name.map
```

It is also possible to view the equivalent of `size-components` or `size-files` output:

```
$IDF_PATH/tools/idf_size.py --archives build/project_name.map
$IDF_PATH/tools/idf_size.py --files build/project_name.map
```

Linker Map File *This is an advanced analysis method, but it can be very useful. Feel free to skip ahead to :ref:`reducing-overall-size` and possibly come back to this later.*

The `idf.py size` analysis tools all work by parsing the GNU binutils "linker map file", which is a summary of everything the linker did when it created ("linked") the final firmware binary file

Linker map files themselves are plain text files, so it's possible to read them and find out exactly what the linker did. However, they are also very complex and long - often 100,000 or more lines!

The map file itself is broken into parts and each part has a heading. The parts are:

- `Archive member included to satisfy reference by file (symbol)`. This shows you: for each object file included in the link, what symbol (function or variable) was the linker searching for when it included that object file. If you're wondering why some object file in particular was included in the binary, this part may give a clue. This part can be used in conjunction with the `Cross Reference Table` at the end of the file. Note that not every object file shown in this list ends up included in the final binary, some end up in the `Discarded input sections` list instead.
- `Allocating common symbols` - This is a list of (some) global variables along with their sizes. Common symbols have a particular meaning in ELF binary files, but ESP-IDF doesn't make much use of them.
- `Discarded input sections` - These sections were read by the linker as part of an object file to be linked into the final binary, but then nothing else referred to them so they were discarded from the final binary. For ESP-IDF this list can be very long, as we compile each function and static variable to a unique section in order to minimize the final binary size (specifically ESP-IDF uses compiler options `-ffunction-sections -fdata-sections` and linker option `--gc-sections`). Items mentioned in this list *do not* contribute to the final binary.
- `Memory Configuration`, `Linker script and memory map` These two parts go together. Some of the output comes directly from the linker command line and the Linker Script, both provided by the *Build System*. The linker script is partially generated from the ESP-IDF project using the *Linker Script Generation* feature.
  As the output of the `Linker script and memory map` part of the map unfolds, you can see each symbol (function or static variable) linked into the final binary along with its address (as a 16 digit hex number), its length (also in hex), and the library and object file it was linked from (which can be used to determine the component and the source file).
  Following all of the output sections that take up space in the final `.bin` file, the `memory map` also includes some sections in the ELF file that are only used for debugging (ELF sections `.debug_*`, etc.). These don't contribute to the final binary size. You'll notice the address of these symbols is a very low number (starting from 0x0000000000000000 and counting up).
- `Cross Reference Table`. This table shows for each symbol (function or static variable), the list of object file(s) that referred to it. If you're wondering why a particular thing is included in the binary, this will help determine what included it.

  Note: Unfortunately, the `Cross Reference Table` doesn't only include symbols that made it into the final binary. It also includes symbols in discarded sections. Therefore, just because something is shown here doesn't mean that it was included in the final binary - this needs to be checked separately.

Note: Linker map files are generated by the GNU binutils linker "ld", not ESP-IDF. You can find additional information online about the linker map file format. This quick summary is written from the perspective of ESP-IDF build system in particular.

Reducing Overall Size The following configuration options will reduce the final binary size of almost any ESP-IDF project:

- Set *CONFIG_COMPILER_OPTIMIZATION* to "Optimize for size (-Os)". In some cases, "Optimize for performance (-O2)" will also reduce the binary size compared to the default. Note that if your code contains C or C++ Undefined Behaviour then increasing the compiler optimization level may expose bugs that otherwise don't happen.
- Reduce the compiled-in log output by lowering the app *CONFIG_LOG_DEFAULT_LEVEL*. If the *CONFIG_LOG_MAXIMUM_LEVEL* is changed from the default then this setting controls the binary size instead. Reducing compiled-in logging reduces the number of strings in the binary, and also the code size of the calls to logging functions.

- Set the *CONFIG_COMPILER_OPTIMIZATION_ASSERTION_LEVEL* to "Silent". This avoids compiling in a dedicated assertion string and source file name for each assert that may fail. It's still possible to find the failed assert in the code by looking at the memory address where the assertion failed.
- Besides the *CONFIG_COMPILER_OPTIMIZATION_ASSERTION_LEVEL*, you can disable or silent the assertion for HAL component separately by setting *CONFIG_HAL_DEFAULT_ASSERTION_LEVEL*.
- Set *CONFIG_COMPILER_OPTIMIZATION_CHECKS_SILENT*. This removes specific error messages for particular internal ESP-IDF error check macros. This may make it harder to debug some error conditions by reading the log output.
- If the binary needs to run on only certain revision(s) of ESP32, increasing *CONFIG_ESP32_REV_MIN* to match can result in a reduced binary size. This will make a large difference if setting ESP32 minimum revision 3, and PSRAM is enabled.
- Don't enable *CONFIG_COMPILER_CXX_EXCEPTIONS*, *CONFIG_COMPILER_CXX_RTTI*, or set the *CONFIG_COMPILER_STACK_CHECK_MODE* to Overall. All of these options are already disabled by default, but they have a large impact on binary size.
- Disabling *CONFIG_ESP_ERR_TO_NAME_LOOKUP* will remove the lookup table to translate user-friendly names for error values (see *Error Handling*) in error logs, etc. This saves some binary size, but error values will be printed as integers only.
- Setting *CONFIG_ESP_SYSTEM_PANIC* to "Silent reboot" will save a small amount of binary size, however this is *only* recommended if no one will use UART output to debug the device.

Note: In addition to the many configuration items shown here, there are a number of configuration options where changing the option from the default will increase binary size. These are not noted here. Where the increase is significant, this is usually noted in the configuration item help text.

Targeted Optimizations The following binary size optimizations apply to a particular component or a function:

Wi-Fi

- Disabling *CONFIG_ESP32_WIFI_ENABLE_WPA3_SAE* will save some Wi-Fi binary size if WPA3 support is not needed. (Note that WPA3 is mandatory for new Wi-Fi device certifications.)
- Disabling *CONFIG_ESP_WIFI_SOFTAP_SUPPORT* will save some Wi-Fi binary size if soft-AP support is not needed.

ADC

- Disabling ADC calibration features *CONFIG_ADC_CAL_EFUSE_TP_ENABLE*, *CONFIG_ADC_CAL_EFUSE_VREF_ENABLE*, *CONFIG_ADC_CAL_LUT_ENABLE* will save a small amount of binary size if ADC driver is used, at expense of accuracy.

Bluetooth NimBLE If using *NimBLE Bluetooth Host* then the following modifications can reduce binary size:

- Set *CONFIG_BTDM_CTRL_BLE_MAX_CONN* to 1 if only one BLE connection is needed.
- *CONFIG_BT_NIMBLE_MAX_CONNECTIONS* to 1 if only one BLE connection is needed.
- Disable either *CONFIG_BT_NIMBLE_ROLE_CENTRAL* or *CONFIG_BT_NIMBLE_ROLE_OBSERVER* if these roles are not needed.
- Reducing *CONFIG_BT_NIMBLE_LOG_LEVEL* can reduce binary size. Note that if the overall log level has been reduced as described above in *Reducing Overall Size* then this also reduces the NimBLE log level.

lwIP IPv6

- Setting *CONFIG_LWIP_IPV6* to false will reduce the size of the lwIP TCP/IP stack, at the cost of only supporting IPv4.

Note: IPv6 is required by some components such as `coap` and *ASIO port*, These components will not be available if IPV6 is disabled.

Newlib nano formatting By default, ESP-IDF uses newlib "full" formating for I/O (printf, scanf, etc.)

Enabling the config option *CONFIG_NEWLIB_NANO_FORMAT* will switch newlib to the "nano" formatting mode. This both smaller in code size and a large part of the implementation is compiled into the ESP32 ROM, so it doesn't need to be included in the binary at all.

The exact difference in binary size depends on which features the firmware uses, but 25 KB ~ 50 KB is typical.

Enabling Nano formatting also reduces the stack usage of each function that calls printf() or another string formatting function, see *Reducing Stack Sizes*.

"Nano" formatting doesn't support 64-bit integers, or C99 formatting features. For a full list of restrictions, search for `--enable-newlib-nano-formatted-io` in the Newlib README file.

mbedTLS features Under *Component Config -> mbedTLS* there are multiple mbedTLS features which are enabled by default but can be disabled if not needed to save code size.

These include:

- *CONFIG_MBEDTLS_HAVE_TIME*
- *CONFIG_MBEDTLS_ECDSA_DETERMINISTIC*
- *CONFIG_MBEDTLS_SHA512_C*
- *CONFIG_MBEDTLS_SSL_PROTO_TLS1*
- *CONFIG_MBEDTLS_SSL_PROTO_TLS1_1*
- *CONFIG_MBEDTLS_CLIENT_SSL_SESSION_TICKETS*
- *CONFIG_MBEDTLS_SERVER_SSL_SESSION_TICKETS*
- *CONFIG_MBEDTLS_SSL_ALPN*
- *CONFIG_MBEDTLS_CCM_C*
- *CONFIG_MBEDTLS_GCM_C*
- *CONFIG_MBEDTLS_ECP_C* (Alternatively: Leave this option enabled but disable some of the elliptic curves listed in the sub-menu.)
- *CONFIG_MBEDTLS_SSL_RENEGOTIATION*
- Change *CONFIG_MBEDTLS_TLS_MODE* if both Server & Client are not needed
- Consider disabling some ciphersuites listed in the "TLS Key Exchange Methods" sub-menu (i.e. *CONFIG_MBEDTLS_KEY_EXCHANGE_RSA*)

The help text for each option has some more information.

Important: It is **strongly not recommended to disable all these mbedTLS options**. Only disable options where you understand the functionality and are certain that it is not needed in the application. In particular:

- Ensure that any TLS server(s) the device connects to can still be used. If the server is controlled by a third party or a cloud service, recommend ensuring that the firmware supports at least two of the supported cipher suites in case one is disabled in a future update.
- Ensure that any TLS client(s) that connect to the device can still connect with supported/recommended cipher suites. Note that future versions of client operating systems may remove support for some features, so it is recommended to enable multiple supported cipher suites or algorithms for redundancy.

If depending on third party clients or servers, always pay attention to announcements about future changes to supported TLS features. If not, the ESP32 device may become inaccessible if support changes.

Note: Not every combination of mbedTLS compile-time config is tested in ESP-IDF. If you find a combination that fails to compile or function as expected, please report the details on GitHub.

FreeModBus If using Modbus, enable or disable *CONFIG_FMB_COMM_MODE_TCP_EN*, *CONFIG_FMB_COMM_MODE_RTU_EN*, *CONFIG_FMB_COMM_MODE_ASCII_EN* as applicable for the necessary functionality.

VFS *Virtual filesystem* feature in ESP-IDF allows multiple filesystem drivers and file-like peripheral drivers to be accessed using standard I/O functions (`open`, `read`, `write`, etc.) and C library functions (`fopen`, `fread`, `fwrite`, etc.). When filesystem or file-like peripheral driver functionality is not used in the application this feature can be fully or partially disabled. VFS component provides the following configuration options:

- *CONFIG_VFS_SUPPORT_TERMIOS* —can be disabled if the application doesn't use `termios` family of functions. Currently, these functions are implemented only for UART VFS driver. Most applications can disable this option. Disabling this option reduces the code size by about 1.8 kB.
- *CONFIG_VFS_SUPPORT_SELECT* — can be disabled if the application doesn't use `select` function with file descriptors. Currently, only the UART and eventfd VFS drivers implement `select` support. Note that when this option is disabled, `select` can still be used for socket file descriptors. Disabling this option reduces the code size by about 2.7 kB.
- *CONFIG_VFS_SUPPORT_DIR* —can be disabled if the application doesn't use directory related functions, such as `readdir` (see the description of this option for the complete list). Applications which only open, read and write specific files and don't need to enumerate or create directories can disable this option, reducing the code size by 0.5 kB or more, depending on the filesystem drivers in use.
- *CONFIG_VFS_SUPPORT_IO* —can be disabled if the application doesn't use filesystems or file-like peripheral drivers. This disables all VFS functionality, including the three options mentioned above. When this option is disabled, *console* can't be used. Note that the application can still use standard I/O functions with socket file descriptors when this option is disabled. Compared to the default configuration, disabling this option reduces code size by about 9.4 kB.

Bootloader Size This document deals with the size of an ESP-IDF app binary only, and not the ESP-IDF *Second stage bootloader*.

For a discussion of ESP-IDF bootloader binary size, see *Bootloader Size*.

IRAM Binary Size If the IRAM section of a binary is too large, this issue can be resolved by reducing IRAM memory usage. See *Optimizing IRAM Usage*.

Minimizing RAM Usage

In some cases, a firmware application's available RAM may run low or run out entirely. In these cases, it's necessary to tune the memory usage of the firmware application.

In general, firmware should aim to leave some "headroom" of free internal RAM in order to deal with extraordinary situations or changes in RAM usage in future updates.

Background Before optimizing ESP-IDF RAM usage, it's necessary to understand the basics of ESP32 memory types, the difference between static and dynamic memory usage in C, and the way ESP-IDF uses stack and heap. This information can all be found in *Heap Memory Allocation*.

Measuring Static Memory Usage The *idf.py* tool can be used to generate reports about the static memory usage of an application. Refer to *the Binary Size chapter for more information*.

Measuring Dynamic Memory Usage ESP-IDF contains a range of heap APIs for measuring free heap at runtime. See *Heap Memory Debugging*.

Note: In embedded systems, heap fragmentation can be a significant issue alongside total RAM usage. The heap measurement APIs provide ways to measure the "largest free block". Monitoring this value along with the total number of free bytes can give a quick indication of whether heap fragmentation is becoming an issue.

Reducing Static Memory Usage

- Reducing the static memory usage of the application increases the amount of RAM available for heap at runtime, and vice versa.
- Generally speaking, minimizing static memory usage requires monitoring the .data and .bss sizes. For tools to do this, see *Measuring Static Sizes*.
- Internal ESP-IDF functions do not make heavy use of static RAM allocation in C. In many instances (including: Wi-Fi library, Bluetooth controller) "static" buffers are still allocated from heap, but the allocation is done once when the feature is initialized and will be freed if the feature is deinitialized. This is done in order to maximize the amount of free memory at different points in the application life-cycle.

To minimize static memory use:

- Declare structures, buffers, or other variables `const` whenever possible. Constant data can be stored in flash not RAM. This may require changing functions in the firmware to take `const *` arguments instead of mutable pointer arguments. These changes can also reduce the stack usage of some functions.
- If using Bluedroid, setting the option *CONFIG_BT_BLE_DYNAMIC_ENV_MEMORY* will cause Bluedroid to allocate memory on initialization and free it on deinitialization. This doesn't necessarily reduce the peak memory usage, but changes it from static memory usage to runtime memory usage.

Reducing Stack Sizes In FreeRTOS, task stacks are usually allocated from the heap. The stack size for each task is fixed (passed as an argument to *`xTaskCreate()`*). Each task can use up to its allocated stack size, but using more than this will cause an otherwise valid program to crash with a stack overflow or heap corruption.

Therefore, determining the optimum sizes of each task stack can substantially reduce RAM usage.

To determine optimum task stack sizes:

- Combine tasks. The best task stack size is 0 bytes, achieved by combining a task with another existing task. Anywhere that the firmware can be structured to perform multiple functions sequentially in a single task will increase free memory. In some cases, using a "worker task" pattern where jobs are serialized into a FreeRTOS queue (or similar) and then processed by generic worker tasks may help.
- Consolidate task functions. String formatting functions (like `printf`) are particularly heavy users of stack, so any task which doesn't ever call these can usually have its stack size reduced.
- Enabling *Newlib nano formatting* will reduce the stack usage of any task that calls `printf()` or other C string formatting functions.
- Avoid allocating large variables on the stack. In C, any large struct or array allocated as an "automatic" variable (i.e. default scope of a C declaration) will use space on the stack. Minimize the sizes of these, allocate them statically and/or see if you can save memory by allocating them from the heap only when they are needed.
- Avoid deep recursive function calls. Individual recursive function calls don't always add a lot of stack usage each time they are called, but if each function includes large stack-based variables then the overhead can get quite high.
- At runtime, call the function *`uxTaskGetStackHighWaterMark()`* with the handle of any task where you think there is unused stack memory. This function returns the minimum lifetime free stack memory in bytes. The easiest time to call this is from the task itself: call `uxTaskGetStackHighWaterMark(NULL)` to get the current task's high water mark after the time that the task has achieved its peak stack usage (i.e. if there is a main loop, execute the main loop a number of times with all possible states and then call *`uxTaskGetStackHighWaterMark()`*). Often, it's possible to subtract almost the entire value returned here from the total stack size of a task, but allow some safety margin to account for unexpected small increases in stack usage at runtime.
- Call *`uxTaskGetSystemState()`* at runtime to get a summary of all tasks in the system. This includes their individual stack "high watermark" values.

- When debugger watchpoints are not being used, set the *CONFIG_FREERTOS_WATCHPOINT_END_OF_STACK* option to trigger an immediate panic if a task writes the word at the end of its assigned stack. This is slightly more reliable than the default *CONFIG_FREERTOS_CHECK_STACKOVERFLOW* option of "Check using canary bytes", because the panic happens immediately, not on the next RTOS context switch. Neither option is perfect, it's possible in some cases for stack pointer to skip the watchpoint or canary bytes and corrupt another region of RAM, instead.

Internal Stack Sizes ESP-IDF allocates a number of internal tasks for housekeeping purposes or operating system functions. Some are created during the startup process, and some are created at runtime when particular features are initialized.

The default stack sizes for these tasks are usually set conservatively high, to allow all common usage patterns. Many of the stack sizes are configurable, and it may be possible to reduce them to match the real runtime stack usage of the task.

Important: If internal task stack sizes are set too small, ESP-IDF will crash unpredictably. Even if the root cause is task stack overflow, this is not always clear when debugging. It is recommended that internal stack sizes are only reduced carefully (if at all), with close attention to "high water mark" free space under load. If reporting an issue that occurs when internal task stack sizes have been reduced, please always include this information and the specific configuration that is being used.

- *Main task that executes app_main function* has stack size *CONFIG_ESP_MAIN_TASK_STACK_SIZE*.
- *High Resolution Timer* system task which executes callbacks has stack size *CONFIG_ESP_TIMER_TASK_STACK_SIZE*.
- FreeRTOS Timer Task to handle FreeRTOS timer callbacks has stack size *CONFIG_FREERTOS_TIMER_TASK_STACK_DEPTH*.
- *Event Handling* system task to execute callbacks for the default system event loop has stack size *CONFIG_ESP_SYSTEM_EVENT_TASK_STACK_SIZE*.
- *lwIP* TCP/IP task has stack size *CONFIG_LWIP_TCPIP_TASK_STACK_SIZE*
- *Bluedroid Bluetooth Host* have task stack sizes *CONFIG_BT_BTC_TASK_STACK_SIZE*, *CONFIG_BT_BTU_TASK_STACK_SIZE*.
- *NimBLE Bluetooth Host* has task stack size *CONFIG_BT_NIMBLE_TASK_STACK_SIZE*
- The Ethernet driver creates a task for the MAC to receive Ethernet frames. If using the default config `ETH_MAC_DEFAULT_CONFIG` then the task stack size is 4 KB. This setting can be changed by passing a custom `eth_mac_config_t` struct when initializing the Ethernet MAC.
- FreeRTOS idle task stack size is configured by *CONFIG_FREERTOS_IDLE_TASK_STACKSIZE*.
- If using the *mDNS* and/or *MQTT* components, they create tasks with stack sizes configured by *CONFIG_MDNS_TASK_STACK_SIZE* and *CONFIG_MQTT_TASK_STACK_SIZE*, respectively. MQTT stack size can also be configured using `task_stack` field of `esp_mqtt_client_config_t`.

Note: Aside from built-in system features such as esp-timer, if an ESP-IDF feature is not initialized by the firmware then no associated task is created. In those cases, the stack usage is zero and the stack size configuration for the task is not relevant.

Reducing Heap Usage For functions that assist in analyzing heap usage at runtime, see *Heap Memory Debugging*.

Normally, optimizing heap usage consists of analyzing the usage and removing calls to `malloc()` that aren't being used, reducing the corresponding sizes, or freeing previously allocated buffers earlier.

There are some ESP-IDF configuration options that can reduce heap usage at runtime:

- lwIP documentation has a section to configure *Minimum RAM usage*.

- *Wi-Fi Buffer Usage* describes options to either reduce numbers of "static" buffers or reduce the maximum number of "dynamic" buffers in use, in order to minimize memory usage at possible cost of performance. Note that "static" Wi-Fi buffers are still allocated from heap when Wi-Fi is initialized and will be freed if Wi-Fi is deinitialized.
- The Ethernet driver allocates DMA buffers for the internal Ethernet MAC when it is initialized - configuration options are *CONFIG_ETH_DMA_BUFFER_SIZE*, *CONFIG_ETH_DMA_RX_BUFFER_NUM*, *CONFIG_ETH_DMA_TX_BUFFER_NUM*.
- mbedTLS TLS session memory usage can be minimized by enabling the ESP-IDF feature *CONFIG_MBEDTLS_DYNAMIC_BUFFER*.
- In single core mode only, it's possible to use IRAM as byte accessible memory (added to the regular heap) by enabling *CONFIG_ESP32_IRAM_AS_8BIT_ACCESSIBLE_MEMORY*. Note that this option carries a performance penalty and the risk of security issues caused by executable data. If this option is enabled then it's possible to set other options to prefer certain buffers be allocated from this memory: *mbedTLS*, *NimBLE*.
- Reduce *CONFIG_BTDM_CTRL_BLE_MAX_CONN* if using BLE.
- Reduce *CONFIG_BTDM_CTRL_BR_EDR_MAX_ACL_CONN* if using Bluetooth Classic.

Note: There are other configuration options that will increase heap usage at runtime if changed from the defaults. These are not listed here, but the help text for the configuration item will mention if there is some memory impact.

Optimizing IRAM Usage If the app allocates more static IRAM than is available then the app will fail to build and linker errors such as `section `.iram0.text' will not fit in region `iram0_0_seg'`, `IRAM0 segment data does not fit` and `region `iram0_0_seg' overflowed by 84 bytes` will be seen. If this happens, it is necessary to find ways to reduce static IRAM usage in order to link the application.

To analyze the IRAM usage in the firmware binary, use *Measuring Static Sizes*. If the firmware failed to link, steps to analyze are shown at *Showing Size When Linker Fails*.

The following options will reduce IRAM usage of some ESP-IDF features:

- Enable *CONFIG_FREERTOS_PLACE_FUNCTIONS_INTO_FLASH*. Provided these functions are not (incorrectly) used from ISRs, this option is safe to enable in all configurations.
- Enable *CONFIG_FREERTOS_PLACE_SNAPSHOT_FUNS_INTO_FLASH*. Enabling this option will place snapshot-related functions, such as `vTaskGetSnapshot` or `uxTaskGetSnapshotAll`, in flash.
- Enable *CONFIG_RINGBUF_PLACE_FUNCTIONS_INTO_FLASH*. Provided these functions are not (incorrectly) used from ISRs, this option is safe to enable in all configurations.
- Enable *CONFIG_RINGBUF_PLACE_ISR_FUNCTIONS_INTO_FLASH*. This option is not safe to use if the ISR ringbuf functions are used from an IRAM interrupt context, e.g. if *CONFIG_UART_ISR_IN_IRAM* is enabled. For the IDF drivers where this is the case you will get an error at run-time when installing the driver in question.
- Disable Wi-Fi options *CONFIG_ESP32_WIFI_IRAM_OPT* and/or *CONFIG_ESP32_WIFI_RX_IRAM_OPT*. Disabling these options will free available IRAM at the cost of Wi-Fi performance.
- *CONFIG_SPI_FLASH_ROM_DRIVER_PATCH* disabling this option will free some IRAM but is only available in some flash configurations (see the configuration item help text).
- Disabling *CONFIG_ESP_EVENT_POST_FROM_IRAM_ISR* prevents posting `esp_event` events from *IRAM-Safe Interrupt Handlers* but will save some IRAM.
- Disabling *CONFIG_SPI_MASTER_ISR_IN_IRAM* prevents spi_master interrupts from being serviced while writing to flash, and may otherwise reduce spi_master performance, but will save some IRAM.
- Setting *CONFIG_HAL_DEFAULT_ASSERTION_LEVEL* to disable assertion for HAL component will save some IRAM especially for HAL code who calls *HAL_ASSERT* a lot and resides in IRAM.

When compiling for ESP32 revisions older than ECO3 (*CONFIG_ESP32_REV_MIN*), PSRAM cache bug workaround (*CONFIG_SPIRAM_CACHE_WORKAROUND*) option is enabled, and the C library functions normally located in ROM are recompiled with the workaround and placed into IRAM instead. For most applications, it is safe to move many of the C library functions into Flash, reclaiming some IRAM. Corresponding options include:

- *CONFIG_SPIRAM_CACHE_LIBJMP_IN_IRAM*: affects the functions `longjmp` and `setjump`.

- *CONFIG_SPIRAM_CACHE_LIBMATH_IN_IRAM*: affects the functions `abs`, `div`, `labs`, `ldiv`, `quorem`, `fpclassify` and `nan`.
- *CONFIG_SPIRAM_CACHE_LIBNUMPARSER_IN_IRAM*: affects the functions `utoa`, `itoa`, `atoi`, `atol`, `strtol`, and `strtoul`.
- *CONFIG_SPIRAM_CACHE_LIBIO_IN_IRAM*: affects the functions `wcrtomb`, `fvwrite`, `wbuf`, `wsetup`, `fputwc`, `wctomb_r`, `ungetc`, `makebuf`, `fflush`, `refill`, and `sccl`.
- *CONFIG_SPIRAM_CACHE_LIBTIME_IN_IRAM*: affects the functions `asctime`, `asctime_r`, `ctime`, `ctime_r`, `lcltime`, `lcltime_r`, `gmtime`, `gmtime_r`, `strftime`, `mktime`, `tzset_r`, `tzset`, `time`, `gettzinfo`, `systimes`, `month_lengths`, `timelocal`, `tzvars`, `tzlock`, `tzcalc_limits`, and `strptime`.
- *CONFIG_SPIRAM_CACHE_LIBCHAR_IN_IRAM*: affects the functions `ctype_`, `toupper`, `tolower`, `toascii`, `strupr`, `bzero`, `isalnum`, `isalpha`, `isascii`, `isblank`, `iscntrl`, `isdigit`, `isgraph`, `islower`, `isprint`, `ispunct`, `isspace`, and `isupper`.
- *CONFIG_SPIRAM_CACHE_LIBMEM_IN_IRAM*: affects the functions `memccpy`, `memchr`, `memmove`, and `memrchr`.
- *CONFIG_SPIRAM_CACHE_LIBSTR_IN_IRAM*: affects the functions `strcasecmp`, `strcasestr`, `strchr`, `strcoll`, `strcpy`, `strcspn`, `strdup`, `strdup_r`, `strlcat`, `strlcpy`, `strlen`, `strlwr`, `strncasecmp`, `strncat`, `strncmp`, `strncpy`, `strndup`, `strndup_r`, `strrchr`, `strsep`, `strspn`, `strstr`, `strtok_r`, and ``strupr`.
- *CONFIG_SPIRAM_CACHE_LIBRAND_IN_IRAM*: affects the functions `srand`, `rand`, and `rand_r`.
- *CONFIG_SPIRAM_CACHE_LIBENV_IN_IRAM*: affects the functions `environ`, `envlock`, and `getenv_r`.
- *CONFIG_SPIRAM_CACHE_LIBFILE_IN_IRAM*: affects the functions lock``, `isatty`, `fclose`, `open`, `close`, `creat`, `read`, `rshift`, `sbrk`, `stdio`, `syssbrk`, `sysclose`, `sysopen`, `creat`, `sysread`, `syswrite`, `impure`, `fwalk`, and `findfp`.
- *CONFIG_SPIRAM_CACHE_LIBMISC_IN_IRAM*: affects the functions `raise` and `system`.

The exact amount of IRAM saved will depend on how much C library code is actually used by the application. In addition to these, the following options may be used to move more of the C library code into Flash, however note that this may result in reduced performance. Also take care to not use corresponding C library functions from interrupts which may be called while cache is disabled (allocated with *ESP_INTR_FLAG_IRAM* flag), refer to *IRAM-Safe Interrupt Handlers* for more details. For these reasons, the functions `itoa`, `memcmp`, `memcpy`, `memset`, `strcat`, `strcmp`, and `strlen` are always put in IRAM.

Note: Moving frequently-called functions from IRAM to flash may increase their execution time.

Note: Other configuration options exist that will increase IRAM usage by moving some functionality into IRAM, usually for performance, but the default option is not to do this. These are not listed here. The IRAM size impact of enabling these options is usually noted in the configuration item help text.

4.26 RF calibration

ESP32 supports three RF calibration methods during RF initialization:

1. Partial calibration
2. Full calibration
3. No calibration

4.26.1 Partial calibration

During RF initialization, the partial calibration method is used by default for RF calibration. It is done based on the full calibration data which is stored in the NVS. To use this method, please go to `menuconfig` and enable *CONFIG_ESP_PHY_CALIBRATION_AND_DATA_STORAGE*.

4.26.2 Full calibration

Full calibration is triggered in the follwing conditions:

1. NVS does not exist.
2. The NVS partition to store calibration data is erased.
3. Hardware MAC address is changed.
4. PHY library version is changed.
5. The RF calibration data loaded from the NVS partition is broken.

It takes about 100ms more than partial calibration. If boot duration is not critical, it is suggested to use the full calibration method. To switch to the full calibration method, go to `menuconfig` and disable *CONFIG_ESP_PHY_CALIBRATION_AND_DATA_STORAGE*. If you use the default method of RF calibration, there are two ways to add the function of triggering full calibration as a last-resort remedy.

1. Erase the NVS partition if you don't mind all of the data stored in the NVS partition is erased. That is indeed the easiest way.
2. Call API `esp_phy_erase_cal_data_in_nvs()` before initializing WiFi and BT/BLE based on some conditions (e.g. an option provided in some diagnostic mode). In this case, only phy namespace of the NVS partition is erased.

4.26.3 No calibration

No calibration method is only used when the device wakes up from deep sleep.

4.26.4 PHY initialization data

The PHY initialization data is used for RF calibration. There are two ways to get the PHY initialization data.

One is the default initialization data which is located in the header file components/esp_phy/esp32/include/phy_init_data.h.

It is embedded into the application binary after compiling and then stored into read-only memory (DROM). To use the default initialization data, please go to `menuconfig` and disable *CONFIG_ESP_PHY_INIT_DATA_IN_PARTITION*.

Another is the initialization data which is stored in a partition. When using a custom partition table, make sure that PHY data partition is included (type: *data*, subtype: *phy*). With default partition table, this is done automatically. If initialization data is stored in a partition, it has to be flashed there, otherwise runtime error will occur. To switch to the initialization data stored in a partition, go to `menuconfig` and enable *CONFIG_ESP_PHY_INIT_DATA_IN_PARTITION*.

4.27 Secure Boot

Important: All references in this document are related to Secure Boot V1 (The AES based Secure Boot Scheme). ESP32 Revision 3 onwards, the preferred secure boot scheme is *Secure Boot V2*. Please refer to Secure Boot V2 document for ESP32 Revision 3 or ESP32-S2.

Secure Boot is a feature for ensuring only your code can run on the chip. Data loaded from flash is verified on each reset.

Secure Boot is separate from the *Flash Encryption* feature, and you can use secure boot without encrypting the flash contents. However, for a secure environment both should be used simultaneously. See *Secure Boot & Flash Encryption* for more details.

Important: Enabling secure boot limits your options for further updates of your ESP32. Make sure to read this document throughly and understand the implications of enabling secure boot.

4.27.1 Background

- Most data is stored in flash. Flash access does not need to be protected from physical access in order for secure boot to function, because critical data is stored (non-software-accessible) in Efuses internal to the chip.
- Efuses are used to store the secure bootloader key (in efuse BLOCK2), and also a single Efuse bit (ABS_DONE_0) is burned (written to 1) to permanently enable secure boot on the chip. For more details on eFuses, see *ESP32 Technical Reference Manual > eFuse Controller (eFuse)* [PDF].
- To understand the secure boot process, first familiarise yourself with the standard *ESP-IDF boot process*.
- Both stages of the boot process (initial software bootloader load, and subsequent partition & app loading) are verified by the secure boot process, in a "chain of trust" relationship.

4.27.2 Secure Boot Process Overview

This is a high level overview of the secure boot process. Step by step instructions are supplied under *How To Enable Secure Boot*. Further in-depth details are supplied under *Technical Details*:

1. The options to enable secure boot are provided in the *Project Configuration Menu*, under "Secure Boot Configuration".
2. Secure Boot defaults to signing images and partition table data during the build process. The "Secure boot private signing key" config item is a file path to a ECDSA public/private key pair in a PEM format file.
3. The software bootloader image is built by esp-idf with secure boot support enabled and the public key (signature verification) portion of the secure boot signing key compiled in. This software bootloader image is flashed at offset 0x1000.
4. On first boot, the software bootloader follows the following process to enable secure boot:
   - Hardware secure boot support generates a device secure bootloader key (generated via hardware RNG, then stored read/write protected in efuse), and a secure digest. The digest is derived from the key, an IV, and the bootloader image contents.
   - The secure digest is flashed at offset 0x0 in the flash.
   - Depending on Secure Boot Configuration, efuses are burned to disable JTAG and the ROM BASIC interpreter (it is strongly recommended these options are turned on.)
   - Bootloader permanently enables secure boot by burning the ABS_DONE_0 efuse. The software bootloader then becomes protected (the chip will only boot a bootloader image if the digest matches.)
5. On subsequent boots the ROM bootloader sees that the secure boot efuse is burned, reads the saved digest at 0x0 and uses hardware secure boot support to compare it with a newly calculated digest. If the digest does not match then booting will not continue. The digest and comparison are performed entirely by hardware, and the calculated digest is not readable by software. For technical details see *Secure Boot Hardware Support*.
6. When running in secure boot mode, the software bootloader uses the secure boot signing key (the public key of which is embedded in the bootloader itself, and therefore validated as part of the bootloader) to verify the signature appended to all subsequent partition tables and app images before they are booted.

4.27.3 Keys

The following keys are used by the secure boot process:

- "secure bootloader key" is a 256-bit AES key that is stored in Efuse block 2. The bootloader can generate this key itself from the internal hardware random number generator, the user does not need to supply it (it is optionally possible to supply this key, see *Re-Flashable Software Bootloader*). The Efuse holding this key is read & write protected (preventing software access) before secure boot is enabled.
  - By default, the Efuse Block 2 Coding Scheme is "None" and a 256 bit key is stored in this block. On some ESP32s, the Coding Scheme is set to 3/4 Encoding (CODING_SCHEME efuse has value 1) and a 192 bit key must be stored in this block.

For more details, see *ESP32 Technical Reference Manual* > *eFuse Controller (eFuse)* > *System Parameter coding_scheme* [PDF].
The algorithm operates on a 256 bit key in all cases, 192 bit keys are extended by repeating some bits (*details*).

- "secure boot signing key" is a standard ECDSA public/private key pair (see *Image Signing Algorithm*) in PEM format.
  - The public key from this key pair (for signature verification but not signature creation) is compiled into the software bootloader and used to verify the second stage of booting (partition table, app image) before booting continues. The public key can be freely distributed, it does not need to be kept secret.
  - The private key from this key pair *must be securely kept private*, as anyone who has this key can authenticate to any bootloader that is configured with secure boot and the matching public key.

4.27.4 Bootloader Size

Enabling Secure boot and/or flash encryption will increase the size of bootloader, which might require updating partition table offset. See *Bootloader Size*.

4.27.5 How To Enable Secure Boot

1. Open the *Project Configuration Menu*, navigate to "Secure Boot Configuration" and select the option "One-time Flash". (To understand the alternative "Reflashable" choice, see *Re-Flashable Software Bootloader*.)
2. Select a name for the secure boot signing key. This option will appear after secure boot is enabled. The file can be anywhere on your system. A relative path will be evaluated from the project directory. The file does not need to exist yet.
3. Set other menuconfig options (as desired). Pay particular attention to the "Bootloader Config" options, as you can only flash the bootloader once. Then exit menuconfig and save your configuration
4. The first time you run `make`, if the signing key is not found then an error message will be printed with a command to generate a signing key via `espsecure.py generate_signing_key`.

Important: A signing key generated this way will use the best random number source available to the OS and its Python installation (*/dev/urandom* on OSX/Linux and *CryptGenRandom()* on Windows). If this random number source is weak, then the private key will be weak.

Important: For production environments, we recommend generating the keypair using openssl or another industry standard encryption program. See *Generating Secure Boot Signing Key* for more details.

---

5. Run `idf.py bootloader` to build a secure boot enabled bootloader. The build output will include a prompt for a flashing command, using `esptool.py write_flash`.
6. When you're ready to flash the bootloader, run the specified command (you have to enter it yourself, this step is not performed by make) and then wait for flashing to complete. **Remember this is a one time flash, you can't change the bootloader after this!**.
7. Run `idf.py flash` to build and flash the partition table and the just-built app image. The app image will be signed using the signing key you generated in step 4.

Note: `idf.py flash` doesn't flash the bootloader if secure boot is enabled.

---

8. Reset the ESP32 and it will boot the software bootloader you flashed. The software bootloader will enable secure boot on the chip, and then it verifies the app image signature and boots the app. You should watch the serial console output from the ESP32 to verify that secure boot is enabled and no errors have occurred due to the build configuration.

Note: Secure boot won't be enabled until after a valid partition table and app image have been flashed. This is to prevent accidents before the system is fully configured.

Note: If the ESP32 is reset or powered down during the first boot, it will start the process again on the next boot.

9. On subsequent boots, the secure boot hardware will verify the software bootloader has not changed (using the secure bootloader key) and then the software bootloader will verify the signed partition table and app image (using the public key portion of the secure boot signing key).

4.27.6 Re-Flashable Software Bootloader

Configuration "Secure Boot: One-Time Flash" is the recommended configuration for production devices. In this mode, each device gets a unique key that is never stored outside the device.

However, an alternative mode *Secure Boot: Reflashable* is also available. This mode allows you to supply a binary key file that is used for the secure bootloader key. As you have the key file, you can generate new bootloader images and secure boot digests for them.

In the esp-idf build process, this 256-bit key file is derived from the ECDSA app signing key generated by the user (see the *Generating Secure Boot Signing Key* step below). This private key's SHA-256 digest is used as the secure bootloader key in efuse (as-is for Coding Scheme None, or truncate to 192 bytes for 3/4 Encoding). This is a convenience so you only need to generate/protect a single private key.

Note: Although it's possible, we strongly recommend not generating one secure boot key and flashing it to every device in a production environment. The "One-Time Flash" option is recommended for production environments.

To enable a reflashable bootloader:

1. In the *Project Configuration Menu*, select "Bootloader Config" -> *CONFIG_SECURE_BOOT* -> CONFIG_SECURE_BOOT_V1_ENABLED -> *CONFIG_SECURE_BOOTLOADER_MODE* -> Reflashable.
2. If necessary, set the *CONFIG_SECURE_BOOTLOADER_KEY_ENCODING* based on the coding scheme used by the device. The coding scheme is shown in the `Features` line when `esptool.py` connects to the chip, or in the `espefuse.py summary` output.
2. Follow the steps shown above to choose a signing key file, and generate the key file.
3. Run `idf.py bootloader`. A binary key file will be created, derived from the private key that is used for signing. Two sets of flashing steps will be printed - the first set of steps includes an `espefuse.py burn_key secure_boot_v1 path_to/secure-bootloader-key-xxx.bin` command which is used to write the bootloader key to efuse. (Flashing this key is a one-time-only process.) The second set of steps can be used to reflash the bootloader with a pre-calculated digest (generated during the build process).
4. Resume from *Step 6 of the one-time flashing process*, to flash the bootloader and enable secure boot. Watch the console log output closely to ensure there were no errors in the secure boot configuration.

4.27.7 Generating Secure Boot Signing Key

The build system will prompt you with a command to generate a new signing key via `espsecure.py generate_signing_key`. This uses the python-ecdsa library, which in turn uses Python's os.urandom() as a random number source.

The strength of the signing key is proportional to (a) the random number source of the system, and (b) the correctness of the algorithm used. For production devices, we recommend generating signing keys from a system with a quality entropy source, and using the best available EC key generation utilities.

For example, to generate a signing key using the openssl command line:

` openssl ecparam -name prime256v1 -genkey -noout -out my_secure_boot_signing_key.pem `

Remember that the strength of the secure boot system depends on keeping the signing key private.

4.27.8 Remote Signing of Images

For production builds, it can be good practice to use a remote signing server rather than have the signing key on the build machine (which is the default esp-idf secure boot configuration). The espsecure.py command line program can be used to sign app images & partition table data for secure boot, on a remote system.

To use remote signing, disable the option "Sign binaries during build". The private signing key does not need to be present on the build system. However, the public (signature verification) key is required because it is compiled into the bootloader (and can be used to verify image signatures during OTA updates.

To extract the public key from the private key:

```
espsecure.py extract_public_key --keyfile PRIVATE_SIGNING_KEY PUBLIC_VERIFICATION_
↪KEY
```

The path to the public signature verification key needs to be specified in the menuconfig under "Secure boot public signature verification key" in order to build the secure bootloader.

After the app image and partition table are built, the build system will print signing steps using espsecure.py:

```
espsecure.py sign_data --keyfile PRIVATE_SIGNING_KEY BINARY_FILE
```

The above command appends the image signature to the existing binary. You can use the *–output* argument to write the signed binary to a separate file:

```
espsecure.py sign_data --keyfile PRIVATE_SIGNING_KEY --output SIGNED_BINARY_FILE␣
↪BINARY_FILE
```

4.27.9 Secure Boot Best Practices

- Generate the signing key on a system with a quality source of entropy.
- Keep the signing key private at all times. A leak of this key will compromise the secure boot system.
- Do not allow any third party to observe any aspects of the key generation or signing process using espsecure.py. Both processes are vulnerable to timing or other side-channel attacks.
- Enable all secure boot options in the Secure Boot Configuration. These include flash encryption, disabling of JTAG, disabling BASIC ROM interpeter, and disabling the UART bootloader encrypted flash access.
- Use secure boot in combination with *flash encryption* to prevent local readout of the flash contents.

4.27.10 Technical Details

The following sections contain low-level reference descriptions of various secure boot elements:

Secure Boot Hardware Support

The first stage of secure boot verification (checking the software bootloader) is done via hardware. The ESP32's Secure Boot support hardware can perform three basic operations:

1. Generate a random sequence of bytes from a hardware random number generator.
2. Generate a digest from data (usually the bootloader image from flash) using a key stored in Efuse block 2. The key in Efuse can (& should) be read/write protected, which prevents software access. For full details of this algorithm see *Secure Bootloader Digest Algorithm*. The digest can only be read back by software if Efuse ABS_DONE_0 is *not* burned (ie still 0).

3. Generate a digest from data (usually the bootloader image from flash) using the same algorithm as step 2 and compare it to a pre-calculated digest supplied in a buffer (usually read from flash offset 0x0). The hardware returns a true/false comparison without making the digest available to software. This function is available even when Efuse ABS_DONE_0 is burned.

Secure Bootloader Digest Algorithm

Starting with an "image" of binary data as input, this algorithm generates a digest as output. The digest is sometimes referred to as an "abstract" in hardware documentation.

For a Python version of this algorithm, see the `espsecure.py` tool in the components/esptool_py directory (specifically, the `digest_secure_bootloader` command).

Items marked with (^) are to fulfill hardware restrictions, as opposed to cryptographic restrictions.

1. Read the AES key from efuse block 2, in reversed byte order. If Coding Scheme is set to 3/4 Encoding, extend the 192 bit key to 256 bits using the same algorithm described in *Flash Encryption Algorithm*.
2. Prefix the image with a 128 byte randomly generated IV.
3. If the image length is not modulo 128, pad the image to a 128 byte boundary with 0xFF. (^)
4. For each 16 byte plaintext block of the input image: - Reverse the byte order of the plaintext input block (^) - Apply AES256 in ECB mode to the plaintext block. - Reverse the byte order of the ciphertext output block. (^) - Append to the overall ciphertext output.
5. Byte-swap each 4 byte word of the ciphertext (^)
6. Calculate SHA-512 of the ciphertext.

Output digest is 192 bytes of data: The 128 byte IV, followed by the 64 byte SHA-512 digest.

Image Signing Algorithm

Deterministic ECDSA as specified by RFC 6979.

- Curve is NIST256p (openssl calls this curve "prime256v1", it is also sometimes called secp256r1).
- Hash function is SHA256.
- Key format used for storage is PEM.
  - In the bootloader, the public key (for signature verification) is flashed as 64 raw bytes.
- Image signature is 68 bytes - a 4 byte version word (currently zero), followed by a 64 bytes of signature data. These 68 bytes are appended to an app image or partition table data.

Manual Commands

Secure boot is integrated into the esp-idf build system, so `make` will automatically sign an app image if secure boot is enabled. `idf.py bootloader` will produce a bootloader digest if menuconfig is configured for it.

However, it is possible to use the `espsecure.py` tool to make standalone signatures and digests.

To sign a binary image:

```
espsecure.py sign_data --keyfile ./my_signing_key.pem --output ./image_signed.bin␣
↪image-unsigned.bin
```

Keyfile is the PEM file containing an ECDSA private signing key.

To generate a bootloader digest:

```
espsecure.py digest_secure_bootloader --keyfile ./securebootkey.bin --output ./
↪bootloader-digest.bin build/bootloader/bootloader.bin
```

Keyfile is the 32 byte raw secure boot key for the device.

The output of the `espsecure.py digest_secure_bootloader` command is a single file which contains both the digest and the bootloader appended to it. To flash the combined digest plus bootloader to the device:

```
esptool.py write_flash 0x0 bootloader-digest.bin
```

4.27.11 Secure Boot & Flash Encryption

If secure boot is used without *Flash Encryption*, it is possible to launch "time-of-check to time-of-use" attack, where flash contents are swapped after the image is verified and running. Therefore, it is recommended to use both the features together.

4.27.12 Signed App Verification Without Hardware Secure Boot

The integrity of apps can be checked even without enabling the hardware secure boot option. This option uses the same app signature scheme as hardware secure boot, but unlike hardware secure boot it does not prevent the bootloader from being physically updated. This means that the device can be secured against remote network access, but not physical access. Compared to using hardware Secure Boot this option is much simpler to implement. See *How To Enable Signed App Verification* for step by step instructions.

An app can be verified on update and, optionally, be verified on boot.

- Verification on update: When enabled, the signature is automatically checked whenever the esp_ota_ops.h APIs are used for OTA updates. If hardware secure boot is enabled, this option is always enabled and cannot be disabled. If hardware secure boot is not enabled, this option still adds significant security against network-based attackers by preventing spoofing of OTA updates.
- Verification on boot: When enabled, the bootloader will be compiled with code to verify that an app is signed before booting it. If hardware secure boot is enabled, this option is always enabled and cannot be disabled. If hardware secure boot is not enabled, this option doesn't add significant security by itself so most users will want to leave it disabled.

How To Enable Signed App Verification

1. Open *Project Configuration Menu* -> Security features -> Enable *CONFIG_SECURE_SIGNED_APPS_NO_SECURE_BOOT*
2. "Bootloader verifies app signatures" can be enabled, which verifies app on boot.
3. By default, "Sign binaries during build" will be enabled on selecting "Require signed app images" option, which will sign binary files as a part of build process. The file named in "Secure boot private signing key" will be used to sign the image.
4. If you disable "Sign binaries during build" option then you'll have to enter path of a public key file used to verify signed images in "Secure boot public signature verification key". In this case, private signing key should be generated by following instructions in *Generating Secure Boot Signing Key*; public verification key and signed image should be generated by following instructions in *Remote Signing of Images*.

4.27.13 Advanced Features

JTAG Debugging

By default, when Secure Boot is enabled then JTAG debugging is disabled via eFuse. The bootloader does this on first boot, at the same time it enables Secure Boot.

See *JTAG with Flash Encryption or Secure Boot* for more information about using JTAG Debugging with either Secure Boot or signed app verification enabled.

4.28 Secure Boot V2

Important: This document is about Secure Boot V2, supported on the following chips: ESP32 (ECO3 onwards), ESP32-S2, ESP32-S3 and ESP32-C3 (ECO3 onwards). Except for ESP32, it is the only supported Secure Boot scheme.

For ESP32 before ECO3, refer to *Secure Boot*. It is recommended that users use Secure Boot V2 if they have a chip version that supports it. Secure Boot V2 is safer and more flexible than Secure Boot V1.

Secure Boot V2 uses RSA based app and bootloader verification. This document can also be used as a reference for signing apps using the RSA scheme without signing the bootloader.

`Secure Boot V2` and RSA scheme (`App Signing Scheme`) options are available for ESP32 from ECO3 onwards. To use these options in menuconfig, set *CONFIG_ESP32_REV_MIN* greater than or equal to *Rev 3*.

4.28.1 Background

Secure Boot protects a device from running any unauthorized (i.e., unsigned) code by checking that each piece of software that is being booted is signed. On an ESP32, these pieces of software include the second stage bootloader and each application binary. Note that the first stage bootloader does not require signing as it is ROM code thus cannot be changed.

A new RSA based Secure Boot verification scheme (Secure Boot V2) has been introduced on the ESP32 (ECO3 onwards), ESP32-S2, ESP32-S3 and ESP32-C3 (ECO3 onwards).

The Secure Boot process on the ESP32 involves the following steps: 1. When the first stage bootloader loads the second stage bootloader, the second stage bootloader ' s RSA-PSS signature is verified. If the verification is successful, the second stage bootloader is executed. 2. When the second stage bootloader loads a particular application image, the application ' s RSA-PSS signature is verified. If the verification is successful, the application image is executed.

4.28.2 Advantages

- The RSA public key is stored on the device. The corresponding RSA private key is kept at a secret place and is never accessed by the device.
- Only one public key can be generated and stored in the chip during manufacturing.
- Same image format and signature verification method is applied for applications and software bootloader.
- No secrets are stored on the device. Therefore, it is immune to passive side-channel attacks (timing or power analysis, etc.)

4.28.3 Secure Boot V2 Process

This is an overview of the Secure Boot V2 Process. Instructions how to enable Secure Boot are supplied in section *How To Enable Secure Boot V2*.

Secure Boot V2 verifies the bootloader image and application binary images using a dedicated *signature block*. Each image has a separately generated signature block which is appended to the end of the image.

Only one signature block can be appended to the bootloader or application image in ESP32 ECO3.

Each signature block contains a signature of the preceding image as well as the corresponding RSA-3072 public key. For more details about the format, refer to *Signature Block Format*. A digest of the RSA-3072 public key is stored in the eFuse.

The application image is not only verified on every boot but also on each over the air (OTA) update. If the currently selected OTA app image cannot be verified, the bootloader will fall back and look for another correctly signed application image.

The Secure Boot V2 process follows these steps:

1. On startup, the ROM code checks the Secure Boot V2 bit in the eFuse. If Secure Boot is disabled, a normal boot will be executed. If Secure Boot is enabled, the boot will proceed according to the following steps.
2. The ROM code verifies the bootloader's signature block (*Verifying a Signature Block*). If this fails, the boot process will be aborted.
3. The ROM code verifies the bootloader image using the raw image data, its corresponding signature block(s), and the eFuse (*Verifying an Image*). If this fails, the boot process will be aborted.
4. The ROM code executes the bootloader.
5. The bootloader verifies the application image's signature block (*Verifying a Signature Block*). If this fails, the boot process will be aborted.
6. The bootloader verifies the application image using the raw image data, its corresponding signature blocks and the eFuse (*Verifying an Image*). If this fails, the boot process will be aborted. If the verification fails but another application image is found, the bootloader will then try to verify that other image using steps 5 to 7. This repeats until a valid image is found or no other images are found.
7. The bootloader executes the verified application image.

4.28.4 Signature Block Format

The bootloader and application images are padded to the next 4096 byte boundary, thus the signature has a flash sector of its own. The signature is calculated over all bytes in the image including the padding bytes.

The content of each signature block is shown in the following table:

Table 28: Content of a Signature Block

Offset	Size (bytes)	Description
0	1	Magic byte
1	1	Version number byte (currently 0x02), 0x01 is for Secure Boot V1.
2	2	Padding bytes, Reserved. Should be zero.
4	32	SHA-256 hash of only the image content, not including the signature block.
36	384	RSA Public Modulus used for signature verification. (value 'n' in RFC8017).
420	4	RSA Public Exponent used for signature verification (value 'e' in RFC8017).
424	384	Pre-calculated R, derived from 'n'.
808	4	Pre-calculated M', derived from 'n'
812	384	RSA-PSS Signature result (section 8.1.1 of RFC8017) of image content, computed using following PSS parameters: SHA256 hash, MFG1 function, 0 length salt, default trailer field (0xBC).
1196	4	CRC32 of the preceding 1095 bytes.
1200	16	Zero padding to length 1216 bytes.

Note: R and M' are used for hardware-assisted Montgomery Multiplication.

The remainder of the signature sector is erased flash (0xFF) which allows writing other signature blocks after previous signature block.

4.28.5 Verifying a Signature Block

A signature block is "valid" if the first byte is 0xe7 and a valid CRC32 is stored at offset 1196. Otherwise it's invalid.

4.28.6 Verifying an Image

An image is "verified" if the public key stored in any signature block is valid for this device, and if the stored signature is valid for the image data read from flash.

1. Compare the SHA-256 hash digest of the public key embedded in the bootloader's signature block with the digest(s) saved in the eFuses. If public key's hash doesn't match any of the hashes from the eFuses, the verification fails.
2. Generate the application image digest and match it with the image digest in the signature block. If the digests don't match, the verification fails.
3. Use the public key to verify the signature of the bootloader image, using RSA-PSS (section 8.1.2 of RFC8017) with the image digest calculated in step (2) for comparison.

4.28.7 Bootloader Size

Enabling Secure boot and/or flash encryption will increase the size of bootloader, which might require updating partition table offset. See *Bootloader Size*.

4.28.8 eFuse usage

ESP32-ECO3:

- ABS_DONE_1 - Enables Secure Boot protection on boot.
- BLK2 - Stores the SHA-256 digest of the public key. SHA-256 hash of public key modulus, exponent, pre-calculated R & M' values (represented as 776 bytes –offsets 36 to 812 - as per the *Signature Block Format*) is written to an eFuse key block. The write-protection bit must be set, but the read-protection bit must not.

The key(s) must be readable in order to give software access to it. If the key(s) is read-protected then the software reads the key(s) as all zeros and the signature verification process will fail, and the boot process will be aborted.

4.28.9 How To Enable Secure Boot V2

1. Open the *Project Configuration Menu*, in "Security features" set "Enable hardware Secure Boot in bootloader" to enable Secure Boot.
2. For ESP32, Secure Boot V2 is available only ESP32 ECO3 onwards. To view the "Secure Boot V2" option the chip revision should be changed to revision 3 (ESP32- ECO3). To change the chip revision, set "Minimum Supported ESP32 Revision" to Rev 3 in "Component Config" -> "ESP32- Specific".
3. Specify the path to Secure Boot signing key, relative to the project directory.
4. Select the desired UART ROM download mode in "UART ROM download mode". By default the UART ROM download mode has been kept enabled in order to prevent permanently disabling it in the development phase, this option is a potentially insecure option. It is recommended to disable the UART download mode for better security.
5. Set other menuconfig options (as desired). Pay particular attention to the "Bootloader Config" options, as you can only flash the bootloader once. Then exit menuconfig and save your configuration.
6. The first time you run `make` or `idf.py build`, if the signing key is not found then an error message will be printed with a command to generate a signing key via `espsecure.py generate_signing_key`.

Important: A signing key generated this way will use the best random number source available to the OS and its Python installation (*/dev/urandom* on OSX/Linux and *CryptGenRandom()* on Windows). If this random number source is weak, then the private key will be weak.

Important: For production environments, we recommend generating the key pair using openssl or another industry standard encryption program. See *Generating Secure Boot Signing Key* for more details.

---

7. Run `idf.py bootloader` to build a Secure Boot enabled bootloader. The build output will include a prompt for a flashing command, using `esptool.py write_flash`.
8. When you're ready to flash the bootloader, run the specified command (you have to enter it yourself, this step is not performed by the build system) and then wait for flashing to complete.
9. Run `idf.py flash` to build and flash the partition table and the just-built app image. The app image will be signed using the signing key you generated in step 4.

Note: `idf.py flash` doesn't flash the bootloader if Secure Boot is enabled.

---

10. Reset the ESP32 and it will boot the software bootloader you flashed. The software bootloader will enable Secure Boot on the chip, and then it verifies the app image signature and boots the app. You should watch the serial console output from the ESP32 to verify that Secure Boot is enabled and no errors have occurred due to the build configuration.

Note: Secure boot won't be enabled until after a valid partition table and app image have been flashed. This is to prevent accidents before the system is fully configured.

Note: If the ESP32 is reset or powered down during the first boot, it will start the process again on the next boot.

---

11. On subsequent boots, the Secure Boot hardware will verify the software bootloader has not changed and the software bootloader will verify the signed app image (using the validated public key portion of its appended signature block).

4.28.10 Restrictions after Secure Boot is enabled

- Any updated bootloader or app will need to be signed with a key matching the digest already stored in eFuse.
- After Secure Boot is enabled, no further eFuses can be read protected. (If *Flash Encryption* is enabled then the bootloader will ensure that any flash encryption key generated on first boot will already be read protected.) If *CONFIG_SECURE_BOOT_INSECURE* is enabled then this behavior can be disabled, but this is not recommended.

4.28.11 Generating Secure Boot Signing Key

The build system will prompt you with a command to generate a new signing key via `espsecure.py generate_signing_key`. The –version 2 parameter will generate the RSA 3072 private key for Secure Boot V2.

The strength of the signing key is proportional to (a) the random number source of the system, and (b) the correctness of the algorithm used. For production devices, we recommend generating signing keys from a system with a quality entropy source, and using the best available RSA key generation utilities.

For example, to generate a signing key using the openssl command line:

```
` openssl genrsa -out my_secure_boot_signing_key.pem 3072 `
```

Remember that the strength of the Secure Boot system depends on keeping the signing key private.

4.28.12 Remote Signing of Images

For production builds, it can be good practice to use a remote signing server rather than have the signing key on the build machine (which is the default esp-idf Secure Boot configuration). The espsecure.py command line program can be used to sign app images & partition table data for Secure Boot, on a remote system.

To use remote signing, disable the option "Sign binaries during build". The private signing key does not need to be present on the build system.

After the app image and partition table are built, the build system will print signing steps using espsecure.py:

```
espsecure.py sign_data --version 2 --keyfile PRIVATE_SIGNING_KEY BINARY_FILE
```

The above command appends the image signature to the existing binary. You can use the *–output* argument to write the signed binary to a separate file:

```
espsecure.py sign_data --version 2 --keyfile PRIVATE_SIGNING_KEY --output SIGNED_
↪BINARY_FILE BINARY_FILE
```

4.28.13 Secure Boot Best Practices

- Generate the signing key on a system with a quality source of entropy.
- Keep the signing key private at all times. A leak of this key will compromise the Secure Boot system.
- Do not allow any third party to observe any aspects of the key generation or signing process using espsecure.py. Both processes are vulnerable to timing or other side-channel attacks.
- Enable all Secure Boot options in the Secure Boot Configuration. These include flash encryption, disabling of JTAG, disabling BASIC ROM interpreter, and disabling the UART bootloader encrypted flash access.
- Use Secure Boot in combination with *flash encryption* to prevent local readout of the flash contents.

4.28.14 Technical Details

The following sections contain low-level reference descriptions of various Secure Boot elements:

Manual Commands

Secure boot is integrated into the esp-idf build system, so `make` or `idf.py build` will sign an app image and `idf.py bootloader` will produce a signed bootloader if secure signed binaries on build is enabled.

However, it is possible to use the `espsecure.py` tool to make standalone signatures and digests.

To sign a binary image:

```
espsecure.py sign_data --version 2 --keyfile ./my_signing_key.pem --output ./image_
↪signed.bin image-unsigned.bin
```

Keyfile is the PEM file containing an RSA-3072 private signing key.

4.28.15 Secure Boot & Flash Encryption

If Secure Boot is used without *Flash Encryption*, it is possible to launch "time-of-check to time-of-use" attack, where flash contents are swapped after the image is verified and running. Therefore, it is recommended to use both the features together.

4.28.16 Signed App Verification Without Hardware Secure Boot

The Secure Boot V2 signature of apps can be checked on OTA update, without enabling the hardware Secure Boot option. This option uses the same app signature scheme as Secure Boot V2, but unlike hardware Secure Boot it does not prevent an attacker who can write to flash from bypassing the signature protection.

This may be desirable in cases where the delay of Secure Boot verification on startup is unacceptable, and/or where the threat model does not include physical access or attackers writing to bootloader or app partitions in flash.

In this mode, the public key which is present in the signature block of the currently running app will be used to verify the signature of a newly updated app. (The signature on the running app isn't verified during the update process, it's assumed to be valid.) In this way the system creates a chain of trust from the running app to the newly updated app.

For this reason, it's essential that the initial app flashed to the device is also signed. A check is run on app startup and the app will abort if no signatures are found. This is to try and prevent a situation where no update is possible. The app should have only one valid signature block in the first position. Note again that, unlike hardware Secure Boot V2, the signature of the running app isn't verified on boot. The system only verifies a signature block in the first position and ignores any other appended signatures.

Note: In general, it's recommended to use full hardware Secure Boot unless certain that this option is sufficient for application security needs.

How To Enable Signed App Verification

1. Open *Project Configuration Menu* -> Security features
2. Ensure *App Signing Scheme* is *RSA*. For ESP32 ECO3 chip, select *CONFIG_ESP32_REV_MIN* to *Rev 3* to get *RSA* option available
3. Enable *CONFIG_SECURE_SIGNED_APPS_NO_SECURE_BOOT*
4. By default, "Sign binaries during build" will be enabled on selecting "Require signed app images" option, which will sign binary files as a part of build process. The file named in "Secure boot private signing key" will be used to sign the image.
5. If you disable "Sign binaries during build" option then all app binaries must be manually signed by following instructions in *Remote Signing of Images*.

Warning: It is very important that all apps flashed have been signed, either during the build or after the build.

4.28.17 Advanced Features

JTAG Debugging

By default, when Secure Boot is enabled then JTAG debugging is disabled via eFuse. The bootloader does this on first boot, at the same time it enables Secure Boot.

See *JTAG with Flash Encryption or Secure Boot* for more information about using JTAG Debugging with either Secure Boot or signed app verification enabled.

4.29 Thread Local Storage

4.29.1 Overview

Thread-local storage (TLS) is a mechanism by which variables are allocated such that there is one instance of the variable per extant thread. ESP-IDF provides three ways to make use of such variables:

- *FreeRTOS Native API*: ESP-IDF FreeRTOS native API.
- *Pthread API*: ESP-IDF's pthread API.
- *C11 Standard*: C11 standard introduces special keyword to declare variables as thread local.

4.29.2 FreeRTOS Native API

The ESP-IDF FreeRTOS provides the following API to manage thread local variables:

- `vTaskSetThreadLocalStoragePointer()`
- `pvTaskGetThreadLocalStoragePointer()`
- `vTaskSetThreadLocalStoragePointerAndDelCallback()`

In this case maximum number of variables that can be allocated is limited by *CONFIG_FREERTOS_THREAD_LOCAL_STORAGE_POINTERS* configuration value. Variables are kept in the task control block (TCB) and accessed by their index. Note that index 0 is reserved for ESP-IDF internal uses.

Using that API user can allocate thread local variables of an arbitrary size and assign them to any number of tasks. Different tasks can have different sets of TLS variables.

If size of the variable is more then 4 bytes then user is responsible for allocating/deallocating memory for it. Variable's deallocation is initiated by FreeRTOS when task is deleted, but user must provide function (callback) to do proper cleanup.

4.29.3 Pthread API

The ESP-IDF provides the following *pthread API* to manage thread local variables:

- `pthread_key_create()`
- `pthread_key_delete()`
- `pthread_getspecific()`
- `pthread_setspecific()`

This API has all benefits of the one above, but eliminates some its limits. The number of variables is limited only by size of available memory on the heap. Due to the dynamic nature this API introduces additional performance overhead compared to the native one.

4.29.4 C11 Standard

The ESP-IDF FreeRTOS supports thread local variables according to C11 standard (ones specified with `__thread` keyword). For details on this GCC feature please see https://gcc.gnu.org/onlinedocs/gcc-5.5.0/gcc/Thread-Local.html#Thread-Local. Storage for that kind of variables is allocated on the task's stack. Note that area for all such variables in the program will be allocated on the stack of every task in the system even if that task does not use such variables at all. For example ESP-IDF system tasks (like `ipc`, `timer` tasks etc.) will also have that extra stack space allocated. So this feature should be used with care. There is a tradeoff: C11 thread local variables are quite handy to use in programming and can be accessed using minimal CPU instructions, but this benefit goes with the cost of additional stack usage for all tasks in the system. Due to static nature of variables allocation all tasks in the system have the same sets of C11 thread local variables.

4.30 Tools

4.30.1 Downloadable Tools

ESP-IDF build process relies on a number of tools: cross-compiler toolchains, CMake build system, and others.

Installing the tools using an OS-specific package manager (like apt, yum, brew, etc.) is the preferred method when the required version of the tool is available. This recommendation is reflected in the Getting Started guide. For example, on Linux and macOS it is recommended to install CMake using an OS package manager.

However, some of the tools are IDF-specific and are not available in OS package repositories. Furthermore, different versions of ESP-IDF require different versions of the tools to operate correctly. To solve these two problems, ESP-IDF provides a set of scripts for downloading and installing the correct versions of tools, and exposing them in the environment.

The rest of the document refers to these downloadable tools simply as "tools". Other kinds of tools used in ESP-IDF are:

- Python scripts bundled with ESP-IDF (such as `idf.py`)
- Python packages installed from PyPI.

The following sections explain the installation method, and provide the list of tools installed on each platform.

Note: This document is provided for advanced users who need to customize their installation, users who wish to understand the installation process, and ESP-IDF developers.

If you are looking for instructions on how to install the tools, see the *Getting Started Guide*.

Tools metadata file

The list of tools and tool versions required for each platform is located in tools/tools.json. The schema of this file is defined by tools/tools_schema.json.

This file is used by tools/idf_tools.py script when installing the tools or setting up the environment variables.

Tools installation directory

`IDF_TOOLS_PATH` environment variable specifies the location where the tools are to be downloaded and installed. If not set, `IDF_TOOLS_PATH` defaults to `HOME/.espressif` on Linux and macOS, and `%USER_PROFILE%\.espressif` on Windows.

Inside `IDF_TOOLS_PATH`, the scripts performing tools installation create the following directories:

- `dist` —where the archives of the tools are downloaded.
- `tools` —where the tools are extracted. The tools are extracted into subdirectories: `tools/TOOL_NAME/VERSION/`. This arrangement allows different versions of tools to be installed side by side.

GitHub Assets Mirror

Most of the tools downloaded by the tools installer are GitHub Release Assets, which are files attached to a software release on GitHub.

If GitHub downloads are inaccessible or slow to access, it's possible to configure a GitHub assets mirror.

To use Espressif's download server, set the environment variable `IDF_GITHUB_ASSETS` to `dl.espressif.com/github_assets`. When the install process is downloading a tool from `github.com`, the URL will be rewritten to use this server instead.

Any mirror server can be used provided the URL matches the `github.com` download URL format: the install process will replace `https://github.com` with `https://${IDF_GITHUB_ASSETS}` for any GitHub asset URL that it downloads.

Note: The Espressif download server doesn't currently mirror everything from GitHub, it only mirrors files attached as Assets to some releases as well as source archives for some releases.

`idf_tools.py` script

tools/idf_tools.py script bundled with ESP-IDF performs several functions:

- `install`: Download the tool into `${IDF_TOOLS_PATH}/dist` directory, extract it into `${IDF_TOOLS_PATH}/tools/TOOL_NAME/VERSION`.
  `install` command accepts the list of tools to install, in `TOOL_NAME` or `TOOL_NAME@VERSION` format. If `all` is given, all the tools (required and optional ones) are installed. If no argument or `required` is given, only the required tools are installed.
- `download`: Similar to `install` but doesn't extract the tools. An optional `--platform` argument may be used to download the tools for the specific platform.

- `export`: Lists the environment variables which need to be set to use the installed tools. For most of the tools, setting `PATH` environment variable is sufficient, but some tools require extra environment variables.
  The environment variables can be listed in either of `shell` or `key-value` formats, set by `--format` parameter:
  - `shell` produces output suitable for evaluation in the shell. For example,

    ```
    export PATH="/home/user/.espressif/tools/tool/v1.0.0/bin:$PATH"
    ```

    on Linux and macOS, and

    ```
    set "PATH=C:\Users\user\.espressif\tools\v1.0.0\bin;%PATH%"
    ```

    on Windows.

    Note: Exporting environment variables in Powershell format is not supported at the moment. `key-value` format may be used instead.

    The output of this command may be used to update the environment variables, if the shell supports this. For example:

    ```
    eval $($IDF_PATH/tools/idf_tools.py export)
    ```

  - `key-value` produces output in *VARIABLE=VALUE* format, suitable for parsing by other scripts:

    ```
    PATH=/home/user/.espressif/tools/tool/v1.0.0:$PATH
    ```

    Note that the script consuming this output has to perform expansion of `$VAR` or `%VAR%` patterns found in the output.
- `list`: Lists the known versions of the tools, and indicates which ones are installed.
- `check`: For each tool, checks whether the tool is available in the system path and in `IDF_TOOLS_PATH`.

Install scripts

Shell-specific user-facing scripts are provided in the root of ESP-IDF repository to facilitate tools installation. These are:

- `install.bat` for Windows Command Prompt
- `install.ps1` for Powershell
- `install.sh` for Bash

Aside from downloading and installing the tools into `IDF_TOOLS_PATH`, these scripts prepare a Python virtual environment, and install the required packages into that environment.

Export scripts

Since the installed tools are not permanently added into the user or system `PATH` environment variable, an extra step is required to use them in the command line. The following scripts modify the environment variables in the current shell to make the correct versions of the tools available:

- `export.bat` for Windows Command Prompt
- `export.ps1` for Powershell
- `export.sh` for Bash

Note: To modify the shell environment in Bash, `export.sh` must be "sourced" : `. ./export.sh` (note the leading dot and space).

`export.sh` may be used with shells other than Bash (such as zsh). However in this case the `IDF_PATH` environment variable must be set before running the script. When used in Bash, the script will guess the `IDF_PATH` value from its own location.

In addition to calling `idf_tools.py`, these scripts list the directories which have been added to the `PATH`.

Other installation methods

Depending on the environment, more user-friendly wrappers for `idf_tools.py` are provided:

- *IDF Tools installer for Windows* can download and install the tools. Internally the installer uses `idf_tools.py`.
- *Eclipse plugin for ESP-IDF* includes a menu item to set up the tools. Internally the plugin calls `idf_tools.py`.
- Visual Studio Code extension for ESP-IDF includes an onboarding flow. This flow helps setting up the tools. Although the extension does not rely on `idf_tools.py`, the same installation method is used.

Custom installation

Although the methods above are recommended for ESP-IDF users, they are not a must for building ESP-IDF applications. ESP-IDF build system expects that all the necessary tools are installed somewhere, and made available in the `PATH`.

List of IDF Tools

xtensa-esp32-elf Toolchain for Xtensa (ESP32) based on GCC

License: GPL-3.0-with-GCC-exception

More info: https://github.com/espressif/crosstool-NG

Platform	Required	Download
linux-amd64	required	https://github.com/espressif/crosstool-NG/releases/download/esp-2021r2-patch5/xtensa-esp32-elf-gcc8_4_0-esp-2021r2-patch5-linux-amd64.tar.gz SHA256: 8ef14e0409c2011b41e504a30f70d3e35287313a795d1f2462ad2cd0e2052d37
linux-arm64	required	https://github.com/espressif/crosstool-NG/releases/download/esp-2021r2-patch5/xtensa-esp32-elf-gcc8_4_0-esp-2021r2-patch5-linux-arm64.tar.gz SHA256: e7d217ac2ef52c746a41f8647840b2717edcd8afc15f081bc1c4505e10a189b7
linux-armel	required	https://github.com/espressif/crosstool-NG/releases/download/esp-2021r2-patch5/xtensa-esp32-elf-gcc8_4_0-esp-2021r2-patch5-linux-armel.tar.gz SHA256: ea6631f8a5105ae90d7fc462c10ed4f9049924ea8c2f9391d90b339d5f881dac
linux-armhf	required	https://github.com/espressif/crosstool-NG/releases/download/esp-2021r2-patch5/xtensa-esp32-elf-gcc8_4_0-esp-2021r2-patch5-linux-armhf.tar.gz SHA256: 883b010e4c42c5ab5c27439ba5709d05d53b663c38a810f57dfd30643b557bdb
linux-i686	required	https://github.com/espressif/crosstool-NG/releases/download/esp-2021r2-patch5/xtensa-esp32-elf-gcc8_4_0-esp-2021r2-patch5-linux-i686.tar.gz SHA256: ecb90af9cede0982672234da0b1bd7b7f76eadde60aa5c82eefdf37d64ffe49f
macos	required	https://github.com/espressif/crosstool-NG/releases/download/esp-2021r2-patch5/xtensa-esp32-elf-gcc8_4_0-esp-2021r2-patch5-macos.tar.gz SHA256: 19af109fda024a3a4c989f7ccaa104f9b1b74cfd6c9363e730bb8cb9b50d5dc4
macos-arm64	required	https://github.com/espressif/crosstool-NG/releases/download/esp-2021r2-patch5/xtensa-esp32-elf-gcc8_4_0-esp-2021r2-patch5-macos-arm64.tar.gz SHA256: b14189772d70a96813895fff7731d0f2fec0c825cfc02e002d6d91a0cc4b6b1d
win32	required	https://github.com/espressif/crosstool-NG/releases/download/esp-2021r2-patch5/xtensa-esp32-elf-gcc8_4_0-esp-2021r2-patch5-win32.zip SHA256: 9851c2cfa355e1fad8abfb643a1c945d27385b1851f3ae468915ea78fcbec940
win64	required	https://github.com/espressif/crosstool-NG/releases/download/esp-2021r2-patch5/xtensa-esp32-elf-gcc8_4_0-esp-2021r2-patch5-win64.zip SHA256: a328b3c55631846241bbe7999a309b20b797c8dc50b6e8dccf463e66a2da5fb4

xtensa-esp32s2-elf Toolchain for Xtensa (ESP32-S2) based on GCC

License: GPL-3.0-with-GCC-exception

More info: https://github.com/espressif/crosstool-NG

Platform	Required	Download
linux-amd64	required	https://github.com/espressif/crosstool-NG/releases/download/esp-2021r2-patch5/xtensa-esp32s2-elf-gcc8_4_0-esp-2021r2-patch5-linux-amd64.tar.gz SHA256: 19c77bd91fefab7c8c40a6334f9b985e2d9a1c7fac6d424b692110930dd3682f
linux-arm64	required	https://github.com/espressif/crosstool-NG/releases/download/esp-2021r2-patch5/xtensa-esp32s2-elf-gcc8_4_0-esp-2021r2-patch5-linux-arm64.tar.gz SHA256: bdcd24676ef2a65b670ca9e0a01768ece47f4dfcfb545a3307f76a054c33b522
linux-armel	required	https://github.com/espressif/crosstool-NG/releases/download/esp-2021r2-patch5/xtensa-esp32s2-elf-gcc8_4_0-esp-2021r2-patch5-linux-armel.tar.gz SHA256: b26723b6ce1c35b90f204eb39e5ab06a6f80fb7895f000e16b6962e4c176ae32
linux-armhf	required	https://github.com/espressif/crosstool-NG/releases/download/esp-2021r2-patch5/xtensa-esp32s2-elf-gcc8_4_0-esp-2021r2-patch5-linux-armhf.tar.gz SHA256: afce6d3541ec616ff11e83181cc6b37948146d87129e93bc8a1b459107f10170
linux-i686	required	https://github.com/espressif/crosstool-NG/releases/download/esp-2021r2-patch5/xtensa-esp32s2-elf-gcc8_4_0-esp-2021r2-patch5-linux-i686.tar.gz SHA256: da3b5c45e4997d14269df1814c92dd7004902bb810608341bc3819c3e506fa0b
macos	required	https://github.com/espressif/crosstool-NG/releases/download/esp-2021r2-patch5/xtensa-esp32s2-elf-gcc8_4_0-esp-2021r2-patch5-macos.tar.gz SHA256: 8eb63745b44083edef7cc6fdf3b06999f576b75134bc5e8b0ef881ca439b72d7
macos-arm64	required	https://github.com/espressif/crosstool-NG/releases/download/esp-2021r2-patch5/xtensa-esp32s2-elf-gcc8_4_0-esp-2021r2-patch5-macos-arm64.tar.gz SHA256: 4cd38d6ec31076c0aa083f62ab84ab5c33aa07fafd0af61366186e5f553aa008
win32	required	https://github.com/espressif/crosstool-NG/releases/download/esp-2021r2-patch5/xtensa-esp32s2-elf-gcc8_4_0-esp-2021r2-patch5-win32.zip SHA256: c758062295804b082fbd77fcd59a356f62d4e76372aaa29589cc871603309cba
win64	required	https://github.com/espressif/crosstool-NG/releases/download/esp-2021r2-patch5/xtensa-esp32s2-elf-gcc8_4_0-esp-2021r2-patch5-win64.zip SHA256: 1c1e168ff8bc460a9719f3b216d3c1125d29040389786d738244838499362c74

xtensa-esp32s3-elf Toolchain for Xtensa (ESP32-S3) based on GCC

License: GPL-3.0-with-GCC-exception

More info: https://github.com/espressif/crosstool-NG

Platform	Required	Download
linux-amd64	required	https://github.com/espressif/crosstool-NG/releases/download/esp-2021r2-patch5/xtensa-esp32s3-elf-gcc8_4_0-esp-2021r2-patch5-linux-amd64.tar.gz SHA256: 8aa17a6adf01efa5b1628c8ac578063a44d26ae9581d39486b92223a41ef262f
linux-arm64	required	https://github.com/espressif/crosstool-NG/releases/download/esp-2021r2-patch5/xtensa-esp32s3-elf-gcc8_4_0-esp-2021r2-patch5-linux-arm64.tar.gz SHA256: b218c11122e5565b6442376ebd21a652abdfcbf90981afa3e177ce978710225d
linux-armel	required	https://github.com/espressif/crosstool-NG/releases/download/esp-2021r2-patch5/xtensa-esp32s3-elf-gcc8_4_0-esp-2021r2-patch5-linux-armel.tar.gz SHA256: 967477434ad5483718915936a77ce915a10c5972a6b3fd02688a5c4e14182bfb
linux-armhf	required	https://github.com/espressif/crosstool-NG/releases/download/esp-2021r2-patch5/xtensa-esp32s3-elf-gcc8_4_0-esp-2021r2-patch5-linux-armhf.tar.gz SHA256: 1ec952c3f72398565beac4fb14c4cbccefb2e299c2c095bc54e260d2d0f3487a
linux-i686	required	https://github.com/espressif/crosstool-NG/releases/download/esp-2021r2-patch5/xtensa-esp32s3-elf-gcc8_4_0-esp-2021r2-patch5-linux-i686.tar.gz SHA256: 07671d01a63ebd389912787efb2b263677c7b351c07fe430ded733cdae95e81d
macos	required	https://github.com/espressif/crosstool-NG/releases/download/esp-2021r2-patch5/xtensa-esp32s3-elf-gcc8_4_0-esp-2021r2-patch5-macos.tar.gz SHA256: 99b6d44cea5aebbedc8b6965e7bf551aa4a40ed83ddbe1c0e9b7cb255564ded5
macos-arm64	required	https://github.com/espressif/crosstool-NG/releases/download/esp-2021r2-patch5/xtensa-esp32s3-elf-gcc8_4_0-esp-2021r2-patch5-macos-arm64.tar.gz SHA256: c64b05be25d26916c65dcfe11de9e60b96d58980b2df706d3074cb70b1ef6cb9
win32	required	https://github.com/espressif/crosstool-NG/releases/download/esp-2021r2-patch5/xtensa-esp32s3-elf-gcc8_4_0-esp-2021r2-patch5-win32.zip SHA256: 658d3036ffdf11ddad6f0a784c8829f6ffd4dbd7c252d7f61722256d0ad43975
win64	required	https://github.com/espressif/crosstool-NG/releases/download/esp-2021r2-patch5/xtensa-esp32s3-elf-gcc8_4_0-esp-2021r2-patch5-win64.zip SHA256: 9000be38d44bf79c39b93a2aeb99b42e956c593ccbc02fe31cb9c71ae1bbcb22

xtensa-clang LLVM for Xtensa (ESP32, ESP32-S2) based on clang

License: Apache-2.0

More info: https://github.com/espressif/llvm-project

Platform	Required	Download
linux-amd64	optional	https://github.com/espressif/llvm-project/releases/download/esp-12.0.1-20210914/xtensa-esp32-elf-llvm12_0_1-esp-12.0.1-20210914-linux-amd64.tar.xz SHA256: d62d9234c702a86ed510777125ee97458204e28877806a73f9de5e41d7b65716
macos	optional	https://github.com/espressif/llvm-project/releases/download/esp-12.0.1-20210914/xtensa-esp32-elf-llvm12_0_1-esp-12.0.1-20210914-macos.tar.xz SHA256: 6e7413e5fa515e403859ecf5301bdcdc3f8bf12c5de9aecaa11e9f17f32b05db
macos-arm64	optional	https://github.com/espressif/llvm-project/releases/download/esp-12.0.1-20210914/xtensa-esp32-elf-llvm12_0_1-esp-12.0.1-20210914-macos.tar.xz SHA256: 6e7413e5fa515e403859ecf5301bdcdc3f8bf12c5de9aecaa11e9f17f32b05db
win64	optional	https://github.com/espressif/llvm-project/releases/download/esp-12.0.1-20210914/xtensa-esp32-elf-llvm12_0_1-esp-12.0.1-20210914-win64.zip SHA256: e056366959c722367e4144076c5383bd417ea199db5658bb7bb6c95b9aca014b

riscv32-esp-elf Toolchain for 32-bit RISC-V based on GCC

License: GPL-3.0-with-GCC-exception

More info: https://github.com/espressif/crosstool-NG

Platform	Required	Download
linux-amd64	required	https://github.com/espressif/crosstool-NG/releases/download/esp-2021r2-patch5/riscv32-esp-elf-gcc8_4_0-esp-2021r2-patch5-linux-amd64.tar.gz SHA256: f7d73e5f9e2df3ea6ca8e2c95d6ca6d23d6b38fd101ea5d3012f3cb3cd59f39f
linux-arm64	required	https://github.com/espressif/crosstool-NG/releases/download/esp-2021r2-patch5/riscv32-esp-elf-gcc8_4_0-esp-2021r2-patch5-linux-arm64.tar.gz SHA256: cf520ae3a72f65b9758ea187524b105b8b7546566d738c32e60a0df9846ef1af
linux-armel	required	https://github.com/espressif/crosstool-NG/releases/download/esp-2021r2-patch5/riscv32-esp-elf-gcc8_4_0-esp-2021r2-patch5-linux-armel.tar.gz SHA256: 2dc3536214caa1697f6834bb4701d05894ca55b53589fc5b54064b050ef93799
linux-armhf	required	https://github.com/espressif/crosstool-NG/releases/download/esp-2021r2-patch5/riscv32-esp-elf-gcc8_4_0-esp-2021r2-patch5-linux-armhf.tar.gz SHA256: 8201acbf47c91bc34b5aa41f6fc7c306c34acb996528c2be9e73c517c6c6adc2
linux-i686	required	https://github.com/espressif/crosstool-NG/releases/download/esp-2021r2-patch5/riscv32-esp-elf-gcc8_4_0-esp-2021r2-patch5-linux-i686.tar.gz SHA256: 165d6d53e76d79f5ade7e2b7ade54b2b495ecfda0d1184d84d6343659d0e3bdb
macos	required	https://github.com/espressif/crosstool-NG/releases/download/esp-2021r2-patch5/riscv32-esp-elf-gcc8_4_0-esp-2021r2-patch5-macos.tar.gz SHA256: d6d4cef216cbf28d6fbb88f3e127d4f42a376d9497c260bf8c1ad9cef440f839
macos-arm64	required	https://github.com/espressif/crosstool-NG/releases/download/esp-2021r2-patch5/riscv32-esp-elf-gcc8_4_0-esp-2021r2-patch5-macos-arm64.tar.gz SHA256: 6e03f2ab1f145be13f8890c6de77b53f52c7bffe3d9d5824549db20298f5ba91
win32	required	https://github.com/espressif/crosstool-NG/releases/download/esp-2021r2-patch5/riscv32-esp-elf-gcc8_4_0-esp-2021r2-patch5-win32.zip SHA256: 1e0cfcfbc8f82c441261cadd21742f66d716ec18c18bf10ed7c7d5b0bee6752f
win64	required	https://github.com/espressif/crosstool-NG/releases/download/esp-2021r2-patch5/riscv32-esp-elf-gcc8_4_0-esp-2021r2-patch5-win64.zip SHA256: b08f568e8fe5069dd521b87da21b8e56117e5c2c3b492f73a51966a46d3379a4

esp32ulp-elf Toolchain for ESP32 ULP coprocessor

License: GPL-3.0-or-later

More info: https://github.com/espressif/binutils-gdb

Platform	Required	Download
linux-amd64	required	https://github.com/espressif/binutils-gdb/releases/download/esp32ulp-elf-v2.35_20220830/esp32ulp-elf-2.35_20220830-linux-amd64.tar.gz SHA256: b1f7801c3a16162e72393ebb772c0cbfe4d22d907be7c2c2dac168736e9195fd
linux-arm64	required	https://github.com/espressif/binutils-gdb/releases/download/esp32ulp-elf-v2.35_20220830/esp32ulp-elf-2.35_20220830-linux-arm64.tar.gz SHA256: d6671b31bab31b9b13aea25bb7d60f15484cb8bf961ddbf67a62867e5563eae5
linux-armel	required	https://github.com/espressif/binutils-gdb/releases/download/esp32ulp-elf-v2.35_20220830/esp32ulp-elf-2.35_20220830-linux-armel.tar.gz SHA256: e107e7a9cd50d630b034f435a16a52db5a57388dc639a99c4c393c5e429711e9
linux-armhf	required	https://github.com/espressif/binutils-gdb/releases/download/esp32ulp-elf-v2.35_20220830/esp32ulp-elf-2.35_20220830-linux-armhf.tar.gz SHA256: 6c6dd25477b2e758d4669da3774bf664d1f012442c880f17dfdf0339e9c3dae9
macos	required	https://github.com/espressif/binutils-gdb/releases/download/esp32ulp-elf-v2.35_20220830/esp32ulp-elf-2.35_20220830-macos.tar.gz SHA256: 5a952087b621ced16af1e375feac1371a61cb51ab7e7b44cbefb5afda2d573de
macos-arm64	required	https://github.com/espressif/binutils-gdb/releases/download/esp32ulp-elf-v2.35_20220830/esp32ulp-elf-2.35_20220830-macos-arm64.tar.gz SHA256: 73bda8476ef92d4f4abee96519abbba40e5ee32f368427469447b83cc7bb9b42
win32	required	https://github.com/espressif/binutils-gdb/releases/download/esp32ulp-elf-v2.35_20220830/esp32ulp-elf-2.35_20220830-win32.zip SHA256: 77344715ea7d7a7a9fd0b27653f880efaf3bcc1ac843f61492d8a0365d91f731
win64	required	https://github.com/espressif/binutils-gdb/releases/download/esp32ulp-elf-v2.35_20220830/esp32ulp-elf-2.35_20220830-win64.zip SHA256: 525e5b4c8299869a3fdddb51baad76612c5c104bd96952ae6460ad7e5b5a4e21

cmake CMake build system

On Linux and macOS, it is recommended to install CMake using the OS-specific package manager (like apt, yum, brew, etc.). However, for convenience it is possible to install CMake using idf_tools.py along with the other tools.

License: BSD-3-Clause

More info: https://github.com/Kitware/CMake

Platform	Required	Download
linux-amd64	optional	https://github.com/Kitware/CMake/releases/download/v3.23.1/cmake-3.23.1-linux-x86_64.tar.gz SHA256: f3c654b2e226b9d43369e0bd8487c51618d4dbe5a1af929dd32af7e6ca432d60
linux-arm64	optional	https://github.com/Kitware/CMake/releases/download/v3.23.1/cmake-3.23.1-linux-aarch64.tar.gz SHA256: 74062efddeb935bce3d33694a4db534cef9a650f77a9a153a9f217d9dc385c75
linux-armel	optional	https://dl.espressif.com/dl/cmake/cmake-3.23.1-Linux-armv7l.tar.gz SHA256: aa6079237e16cc3b389479b2f7279d07e57f6aedad520e2b3014ef97fb906466
linux-armhf	optional	https://dl.espressif.com/dl/cmake/cmake-3.23.1-Linux-armv7l.tar.gz SHA256: aa6079237e16cc3b389479b2f7279d07e57f6aedad520e2b3014ef97fb906466
macos	optional	https://github.com/Kitware/CMake/releases/download/v3.23.1/cmake-3.23.1-macos-universal.tar.gz SHA256: f794ed92ccb4e9b6619a77328f313497d7decf8fb7e047ba35a348b838e0e1e2
macos-arm64	optional	https://github.com/Kitware/CMake/releases/download/v3.23.1/cmake-3.23.1-macos-universal.tar.gz SHA256: f794ed92ccb4e9b6619a77328f313497d7decf8fb7e047ba35a348b838e0e1e2
win32	required	https://github.com/Kitware/CMake/releases/download/v3.23.1/cmake-3.23.1-windows-x86_64.zip SHA256: 9b509cc4eb7191dc128cfa3f2170036f9cbc7d9d5f93ff7fafc5b2d77b3b40dc
win64	required	https://github.com/Kitware/CMake/releases/download/v3.23.1/cmake-3.23.1-windows-x86_64.zip SHA256: 9b509cc4eb7191dc128cfa3f2170036f9cbc7d9d5f93ff7fafc5b2d77b3b40dc

openocd-esp32 OpenOCD for ESP32

License: GPL-2.0-only

More info: https://github.com/espressif/openocd-esp32

Platform	Required	Download
linux-amd64	required	https://github.com/espressif/openocd-esp32/releases/download/v0.11.0-esp32-20220706/openocd-esp32-linux-amd64-0.11.0-esp32-20220706.tar.gz SHA256: 26f1f18dd93eb70a13203848d3fb1cc2e0de1fd6749c7dd771b2de8709735aed
linux-arm64	required	https://github.com/espressif/openocd-esp32/releases/download/v0.11.0-esp32-20220706/openocd-esp32-linux-arm64-0.11.0-esp32-20220706.tar.gz SHA256: f97792bc2852937ec0accb9f0eb2e49926c0f747a71f101a4e34aed75d2c6fcc
linux-armel	required	https://github.com/espressif/openocd-esp32/releases/download/v0.11.0-esp32-20220706/openocd-esp32-linux-armel-0.11.0-esp32-20220706.tar.gz SHA256: 27e4c628994cf342e7fc5b07f49ca5533ba892fd8a150683a382a08758c3dfbe
linux-armhf	required	https://github.com/espressif/openocd-esp32/releases/download/v0.11.0-esp32-20220706/openocd-esp32-linux-armhf-0.11.0-esp32-20220706.tar.gz SHA256: 7f3b57332104e8b8e6194553365a70a9d3754878cfc063d5dc5d839513a63de9
macos	required	https://github.com/espressif/openocd-esp32/releases/download/v0.11.0-esp32-20220706/openocd-esp32-macos-0.11.0-esp32-20220706.tar.gz SHA256: 333ee2ec3c9b5dc6ad4509faae55335cdea7f8bf83a56bfcf5327e4497c8538a
macos-arm64	required	https://github.com/espressif/openocd-esp32/releases/download/v0.11.0-esp32-20220706/openocd-esp32-macos-arm64-0.11.0-esp32-20220706.tar.gz SHA256: 7c5e721aac2ca11fc53595c7df32ea81c348854055ac3fe36340afbe3842756e
win32	required	https://github.com/espressif/openocd-esp32/releases/download/v0.11.0-esp32-20220706/openocd-esp32-win32-0.11.0-esp32-20220706.zip SHA256: c3d39eb4365a9947e71f1d3780ce031185bc6437f21186568a5c05f23f57a8d0
win64	required	https://github.com/espressif/openocd-esp32/releases/download/v0.11.0-esp32-20220706/openocd-esp32-win32-0.11.0-esp32-20220706.zip SHA256: c3d39eb4365a9947e71f1d3780ce031185bc6437f21186568a5c05f23f57a8d0

ninja Ninja build system

On Linux and macOS, it is recommended to install ninja using the OS-specific package manager (like apt, yum, brew, etc.). However, for convenience it is possible to install ninja using idf_tools.py along with the other tools.

License: Apache-2.0

More info: https://github.com/ninja-build/ninja

Platform	Required	Download
linux-amd64	optional	https://dl.espressif.com/dl/ninja-1.10.2-linux64.tar.gz SHA256: 32bb769de4d57aa7ee0e292cfcb7553e7cc8ea0961f7aa2b3aee60aa407c4033
macos	optional	https://dl.espressif.com/dl/ninja-1.10.2-osx.tar.gz SHA256: 847bb1ca4bc16d8dba6aeed3ecb5055498b86bc68c364c37583eb5738bb440f1
macos-arm64	optional	https://dl.espressif.com/dl/ninja-1.10.2-osx.tar.gz SHA256: 847bb1ca4bc16d8dba6aeed3ecb5055498b86bc68c364c37583eb5738bb440f1
win64	required	https://dl.espressif.com/dl/ninja-1.10.2-win64.zip SHA256: bbde850d247d2737c5764c927d1071cbb1f1957dcabda4a130fa8547c12c695f

idf-exe IDF wrapper tool for Windows

License: Apache-2.0

More info: https://github.com/espressif/idf_py_exe_tool

Platform	Required	Download
win32	required	https://github.com/espressif/idf_py_exe_tool/releases/download/v1.0.3/idf-exe-v1.0.3.zip SHA256: 7c81ef534c562354a5402ab6b90a6eb1cc8473a9f4a7b7a7f93ebbd23b4a2755
win64	required	https://github.com/espressif/idf_py_exe_tool/releases/download/v1.0.3/idf-exe-v1.0.3.zip SHA256: 7c81ef534c562354a5402ab6b90a6eb1cc8473a9f4a7b7a7f93ebbd23b4a2755

ccache Ccache (compiler cache)

License: GPL-3.0-or-later

More info: https://github.com/ccache/ccache

Platform	Required	Download
win64	required	https://github.com/ccache/ccache/releases/download/v4.3/ccache-4.3-windows-64.zip SHA256: a9cacae73c3906d8193456328bee74f7748cb1559a32eaced9ee78eadd416105

dfu-util dfu-util (Device Firmware Upgrade Utilities)

License: GPL-2.0-only

More info: http://dfu-util.sourceforge.net/

Platform	Required	Download
win64	required	https://dl.espressif.com/dl/dfu-util-0.9-win64.zip SHA256: 5816d7ec68ef3ac07b5ac9fb9837c57d2efe45b6a80a2f2bbe6b40b1c15c470e

4.30.2 IDF Docker Image

IDF Docker image (`espressif/idf`) is intended for building applications and libraries with specific versions of ESP-IDF, when doing automated builds.

The image contains:

- Common utilities such as git, wget, curl, zip.
- Python 3.6 or newer.
- A copy of a specific version of ESP-IDF (see below for information about versions). `IDF_PATH` environment variable is set, and points to ESP-IDF location in the container.
- All the build tools required for the specific version of ESP-IDF: CMake, make, ninja, cross-compiler toolchains, etc.
- All Python packages required by ESP-IDF are installed in a virtual environment.

The image entrypoint sets up `PATH` environment variable to point to the correct version of tools, and activates the Python virtual environment. As a result, the environment is ready to use the ESP-IDF build system.

The image can also be used as a base for custom images, if additional utilities are required.

Tags

Multiple tags of this image are maintained:

- `latest`: tracks `master` branch of ESP-IDF
- `vX.Y`: corresponds to ESP-IDF release `vX.Y`
- `release-vX.Y`: tracks `release/vX.Y` branch of ESP-IDF

Note: Versions of ESP-IDF released before this feature was introduced do not have corresponding Docker image versions. You can check the up-to-date list of available tags at https://hub.docker.com/r/espressif/idf/tags.

Usage

Setting up Docker Before using the `espressif/idf` Docker image locally, make sure you have Docker installed. Follow the instructions at https://docs.docker.com/install/, if it is not installed yet.

If using the image in CI environment, consult the documentation of your CI service on how to specify the image used for the build process.

Building a project with CMake In the project directory, run:

```
docker run --rm -v $PWD:/project -w /project espressif/idf idf.py build
```

The above command explained:

- `docker run`: runs a Docker image. It is a shorter form of the command `docker container run`.
- `--rm`: removes the container when the build is finished
- `-v $PWD:/project`: mounts the current directory on the host (`$PWD`) as `/project` directory in the container
- `espressif/idf`: uses Docker image `espressif/idf` with tag `latest` (implicitly added by Docker when no tag is specified)
- `idf.py build`: runs this command inside the container

To build with a specific docker image tag, specify it as `espressif/idf:TAG`, for example:

```
docker run --rm -v $PWD:/project -w /project espressif/idf:release-v4.4 idf.py␣
↪build
```

You can check the up-to-date list of available tags at https://hub.docker.com/r/espressif/idf/tags.

Building a project with GNU Make Same as for CMake, except that the build command is different:

```
docker run --rm -v $PWD:/project -w /project espressif/idf make defconfig all -j4
```

Note: If the `sdkconfig` file does not exist, the default behavior of GNU Make build system is to open the menuconfig UI. This may be not desired in automated build environments. To ensure that the `sdkconfig` file exists, `defconfig` target is added before `all`.

If you intend to build the same project repeatedly, you may bind the `tools/kconfig` directory of ESP-IDF to a named volume. This will prevent Kconfig tools, located in ESP-IDF directory, from being rebuilt, causing a rebuild of the rest of the project:

```
docker run --rm -v $PWD:/project -v kconfig:/opt/esp/idf/tools/kconfig -w /project␣
↪espressif/idf make defconfig all -j4
```

If you need clean up the `kconfig` volume, run `docker volume rm kconfig`.

Binding the `tools/kconfig` directory to a volume is not necessary when using the CMake build system.

Using the image interactively It is also possible to do builds interactively, to debug build issues or test the automated build scripts. Start the container with *-i -t* flags:

```
docker run --rm -v $PWD:/project -w /project -it espressif/idf
```

Then inside the container, use `idf.py` as usual:

```
idf.py menuconfig
idf.py build
```

Note: Commands which communicate with the development board, such as `idf.py flash` and `idf.py monitor` will not work in the container unless the serial port is passed through into the container. However currently this is not possible with Docker for Windows (https://github.com/docker/for-win/issues/1018) and Docker for Mac (https://github.com/docker/for-mac/issues/900).

Building custom images

The Dockerfile in ESP-IDF repository provides several build arguments which can be used to customize the Docker image:

- `IDF_CLONE_URL`: URL of the repository to clone ESP-IDF from. Can be set to a custom URL when working with a fork of ESP-IDF. Default is `https://github.com/espressif/esp-idf.git`.
- `IDF_CLONE_BRANCH_OR_TAG`: Name of a git branch or tag use when cloning ESP-IDF. This value is passed to `git clone` command using the `--branch` argument. Default is `master`.
- `IDF_CHECKOUT_REF`: If this argument is set to a non-empty value, `git checkout $IDF_CHECKOUT_REF` command will be performed after cloning. This argument can be set to the SHA of the specific commit to check out, for example if some specific commit on a release branch is desired.
- `IDF_CLONE_SHALLOW`: If this argument is set to a non-empty value, `--depth=1 --shallow-submodules` arguments will be used when performing `git clone`. This significantly reduces the amount of data downloaded and the size of the resulting Docker image. However, if switching to a different branch in such a "shallow" repository is necessary, an additional `git fetch origin <branch>` command must be executed first.
- `IDF_INSTALL_TARGETS`: Comma-separated list of IDF targets to install toolchains for, or `all` to install toolchains for all targets. Selecting specific targets reduces the amount of data downloaded and the size of the resulting Docker image. Default is `all`.

To use these arguments, pass them via the `--build-arg` command line option. For example, the following command will build a Docker image with a shallow clone of ESP-IDF v4.4.1 and tools for ESP32-C3, only:

```
docker build -t idf-custom:v4.4.1-esp32c3 \
    --build-arg IDF_CLONE_BRANCH_OR_TAG=v4.4.1 \
    --build-arg IDF_CLONE_SHALLOW=1 \
    --build-arg IDF_INSTALL_TARGETS=esp32c3 \
    tools/docker
```

4.30.3 IDF Windows Installer

Command-line parameters

Windows Installer *esp-idf-tools-setup* provides the following command-line parameters:

- `/CONFIG=[PATH]` - Path to `ini` configuration file to override default configuration of the installer. Default: `config.ini`.
- `/GITCLEAN=[yes|no]` - Perform git clean and remove untracked directories in Offline mode installation. Default: yes.
- `/GITRECURSIVE=[yes|no]` - Clone recursively all git repository submodules. Default: yes
- `/GITREPO=[URL|PATH]` - URL of repository to clone ESP-IDF. Default: https://github.com/espressif/esp-idf.git
- `/GITRESET=[yes|no]` - Enable/Disable git reset of repository during installation. Default: yes.
- `/HELP` - Display command line options provided by Inno Setup installer.
- `/IDFDIR=[PATH]` - Path to directory where it will be installed. Default: `{userdesktop}\esp-idf}`
- `/IDFVERSION=[v4.3|v4.1|master]` - Use specific IDF version. E.g. v4.1, v4.2, master. Default: empty, pick the first version in the list.
- `/IDFVERSIONSURL=[URL]` - Use URL to download list of IDF versions. Default: https://dl.espressif.com/dl/esp-idf/idf_versions.txt
- `/LOG=[PATH]` - Store installation log file in specific directory. Default: empty.
- `/OFFLINE=[yes|no]` - Execute installation of Python packages by PIP in offline mode. The same result can be achieved by setting the environment variable PIP_NO_INDEX. Default: no.
- `/USEEMBEDDEDPYTHON=[yes|no]` - Use Embedded Python version for the installation. Set to `no` to allow Python selection screen in the installer. Default: yes.
- `/PYTHONNOUSERSITE=[yes|no]` - Set PYTHONNOUSERSITE variable before launching any Python command to avoid loading Python packages from AppDataRoaming. Default: yes.
- `/PYTHONWHEELSURL=[URL]` - Specify URLs to PyPi repositories for resolving binary Python Wheel dependencies. The same result can be achieved by setting the environment variable PIP_EXTRA_INDEX_URL. Default: https://dl.espressif.com/pypi
- `/SKIPSYSTEMCHECK=[yes|no]` - Skip System Check page. Default: no.
- `/VERYSILENT /SUPPRESSMSGBOXES /SP- /NOCANCEL` - Perform silent installation.

Unattended installation

The unattended installation of IDF can be achieved by following command-line parameters:

```
esp-idf-tools-setup-x.x.exe /VERYSILENT /SUPPRESSMSGBOXES /SP- /NOCANCEL
```

The installer detaches its process from the command-line. Waiting for installation to finish could be achieved by following PowerShell script:

```
esp-idf-tools-setup-x.x.exe /VERYSILENT /SUPPRESSMSGBOXES /SP- /NOCANCEL
$InstallerProcess = Get-Process esp-idf-tools-setup
Wait-Process -Id $InstallerProcess.id
```

Custom Python and custom location of Python wheels

The IDF installer is using by default embedded Python with reference to Python Wheel mirror.

Following parameters allows to select custom Python and custom location of Python wheels:

```
esp-idf-tools-setup-x.x.exe /USEEMBEDDEDPYTHON=no /PYTHONWHEELSURL=https://pypi.
↪org/simple/
```

4.30.4 IDF Component Manager

The IDF Component manager is a tool that downloads dependencies for any ESP-IDF CMake project. The download happens automatically during a run of CMake. It can source components either from the component registry or from a git repository.

A list of components can be found on https://components.espressif.com/

Using with a project

Dependencies for each component in the project are defined in a separate manifest file named `idf_component.yml` placed in the root of the component. The manifest file template can be created for a component by running `idf.py create-manifest --component=my_component`. When a new manifest is added to one of the components in the project it's necessary to reconfigure it manually by running `idf.py reconfigure`. Then build will track changes in `idf_component.yml` manifests and automatically triggers CMake when necessary.

There is an example application: example:*build_system/cmake/component_manager* that uses components installed by the component manager.

It's not necessary to have a manifest for components that don't need any managed dependencies.

When CMake configures the project (e.g. `idf.py reconfigure`) component manager does a few things:

- Processes `idf_component.yml` manifests for every component in the project and recursively solves dependencies
- Creates a `dependencies.lock` file in the root of the project with a full list of dependencies
- Downloads all dependencies to the `managed_components` directory

The lock-file `dependencies.lock` and content of `managed_components` directory is not supposed to be modified by a user. When the component manager runs it always make sure they are up to date. If these files were accidentally modified it's possible to re-run the component manager by triggering CMake with `idf.py reconfigure`

Defining dependencies in the manifest

```
dependencies:
  # Required IDF version
  idf: ">=4.1"
  # Defining a dependency from the registry:
  # https://components.espressif.com/component/example/cmp
  example/cmp: ">=1.0.0"

  # # Other ways to define dependencies
  #
  # # For components maintained by Espressif only name can be used.
  # # Same as `espressif/cmp`
  # component: "~1.0.0"
  #
  # # Or in a longer form with extra parameters
  # component2:
```

(continues on next page)

(continued from previous page)

```
#   version: ">=2.0.0"
#
#   # For transient dependencies `public` flag can be set.
#   # `public` flag doesn't affect the `main` component.
#   # All dependencies of `main` are public by default.
#   public: true
#
#   # For components hosted on non-default registry:
#   service_url: "https://componentregistry.company.com"
#
# # For components in git repository:
# test_component:
#   path: test_component
#   git: ssh://git@gitlab.com/user/components.git
#
# # For test projects during component development
# # components can be used from a local directory
# # with relative or absolute path
# some_local_component:
#   path: ../../projects/component
```

Disabling the Component Manager

The component manager can be explicitly disabled by setting `IDF_COMPONENT_MANAGER` environment variable to `0`.

4.30.5 IDF Clang Tidy

The IDF Clang Tidy is a tool that uses clang-tidy to run static analysis on your current app.

Warning: This functionality and the toolchain it relies on are still under development. There may be breaking changes before a final release.

Prerequisites

If you have never run this tool before, take the following steps to get this tool prepared.

1. Run the export scripts (`export.sh` / `export.bat` / ···) to set up the environment variables.
2. Run `pip install --upgrade pyclang` to install this plugin. The extra commands would be activated in `idf.py` automatically.
3. Run `idf_tools.py install xtensa-clang` to install the clang-tidy required binaries

   Note: This toolchain is still under development. After the final release, you don't have to install them manually.

4. Get file from the llvm repository and add the folder of this script to the `$PATH`. Or you could pass an optional argument `--run-clang-tidy-py` later when you call `idf.py clang-check`.

   Note: This file would be bundled in future toolchain releases. This is a temporary workaround.

5. Run the export scripts (`export.sh` / `export.bat` / ···) again to refresh the environment variables.

Extra Commands

clang-check Run `idf.py clang-check` to re-generate the compilation database and run `clang-tidy` under your current project folder. The output would be written to `<project_dir>/warnings.txt`.

Run `idf.py clang-check --help` to see the full documentation.

clang-html-report

1. Run `pip install codereport` to install the additional dependency.
2. Run `idf.py clang-html-report` to generate an HTML report in folder `<project_dir>/html_report` according to the `warnings.txt`. Please open the `<project_dir>/html_report/index.html` in your browser to check the report.

Bug Report

This tool is hosted in espressif/clang-tidy-runner. If you faced any bugs or have any feature request, please report them via github issues.

4.31 ULP Coprocessor programming

The Ultra Low Power (ULP) coprocessor is a simple finite state machine (FSM) which is designed to perform measurements using the ADC, temperature sensor, and external I2C sensors, while the main processors are in deep sleep mode. The ULP coprocessor can access the RTC_SLOW_MEM memory region, and registers in the RTC_CNTL, RTC_IO, and SARADC peripherals. The ULP coprocessor uses fixed-width 32-bit instructions, 32-bit memory addressing, and has 4 general-purpose 16-bit registers. This coprocessor is referred to as *ULP FSM* in ESP-IDF.

4.31.1 Installing the Toolchain

The ULP FSM coprocessor code is written in assembly and compiled using the binutils-esp32ulp toolchain.

If you have already set up ESP-IDF with CMake build system according to the *Getting Started Guide*, then the ULP FSM toolchain will already be installed.

If you are using ESP-IDF with the legacy GNU Make based build system, refer to the instructions on this page: *The ULP Coprocessor (Legacy GNU Make)*.

4.31.2 Programming ULP FSM

The ULP FSM can be programmed using the supported instruction set. Alternatively, the ULP FSM coprocessor can also be programmed using C Macros on the main CPU. Theses two methods are described in the following section:

ESP32 ULP coprocessor instruction set

This document provides details about the instructions used by ESP32 ULP FSM coprocessor assembler.

ULP FSM coprocessor has 4 16-bit general purpose registers, labeled R0, R1, R2, R3. It also has an 8-bit counter register (stage_cnt) which can be used to implement loops. Stage count register is accessed using special instructions.

ULP coprocessor can access 8k bytes of RTC_SLOW_MEM memory region. Memory is addressed in 32-bit word units. It can also access peripheral registers in RTC_CNTL, RTC_IO, and SENS peripherals.

All instructions are 32-bit. Jump instructions, ALU instructions, peripheral register and memory access instructions are executed in 1 cycle. Instructions which work with peripherals (TSENS, ADC, I2C) take variable number of cycles, depending on peripheral operation.

The instruction syntax is case insensitive. Upper and lower case letters can be used and intermixed arbitrarily. This is true both for register names and instruction names.

Note about addressing ESP32 ULP FSM coprocessor's `JUMP`, `ST`, `LD` family of instructions expect the address argument to be expressed in the following way depending on the type of address argument used:

- When the address argument is presented as a label then the instruction expects the address to be expressed as 32-bit words.
  Consider the following example program:

```
entry:
        NOP
        NOP
        NOP
        NOP
loop:
        MOVE R1, loop
        JUMP R1
```

  When this program is assembled and linked, address of label `loop` will be equal to 16 (expressed in bytes). However *JUMP* instruction expects the address stored in register `R1` to be expressed in 32-bit words. To account for this common use case, the assembler will convert the address of label *loop* from bytes to words, when generating the `MOVE` instruction. Hence, the code generated code will be equivalent to:

```
0000    NOP
0004    NOP
0008    NOP
000c    NOP
0010    MOVE R1, 4
0014    JUMP R1
```

- The other case is when the argument of `MOVE` instruction is not a label but a constant. In this case assembler will **use the value as is**, without any conversion:

```
.set        val, 0x10
MOVE        R1, val
```

  In this case, value loaded into `R1` will be `0x10`.
  However, when an immediate value is used as an offset in `LD` and `ST` instructions, the assembler considers the address argument in bytes and converts it to 32-bit words before executing the instruction:

```
ST R1, R2, 4        // offset = 4 bytes; Mem[R2 + 4 / 4] = R1
```

  In this case, the value in R1 is stored at the memory location pointed by [R2 + offset / 4]
  Consider the following code:

```
        .global array
array:  .long 0
        .long 0
        .long 0
        .long 0

        MOVE R1, array
        MOVE R2, 0x1234
        ST R2, R1, 0      // write value of R2 into the first array element,
                          // i.e. array[0]

        ST R2, R1, 4      // write value of R2 into the second array element
                          // (4 byte offset), i.e. array[1]
```

(continues on next page)

(continued from previous page)

```
        ADD R1, R1, 2      // this increments address by 2 words (8 bytes)
        ST R2, R1, 0       // write value of R2 into the third array element,
                           // i.e. array[2]
```

Note about instruction execution time ULP coprocessor is clocked from RTC_FAST_CLK, which is normally derived from the internal 8MHz oscillator. Applications which need to know exact ULP clock frequency can calibrate it against the main XTAL clock:

```
#include "soc/rtc.h"

// calibrate 8M/256 clock against XTAL, get 8M/256 clock period
uint32_t rtc_8md256_period = rtc_clk_cal(RTC_CAL_8MD256, 100);
uint32_t rtc_fast_freq_hz = 1000000ULL * (1 << RTC_CLK_CAL_FRACT) * 256 / rtc_
↪8md256_period;
```

ULP coprocessor needs certain number of clock cycles to fetch each instruction, plus certain number of cycles to execute it, depending on the instruction. See description of each instruction below for details on the execution time.

Instruction fetch time is:

- 2 clock cycles —for instructions following ALU and branch instructions.
- 4 clock cycles —in other cases.

Note that when accessing RTC memories and RTC registers, ULP coprocessor has lower priority than the main CPUs. This means that ULP coprocessor execution may be suspended while the main CPUs access same memory region as the ULP.

The detailed description of all instructions is presented below:

NOP - no operation

Syntax **NOP**
Operands None
Cycles 2 cycle to execute, 4 cycles to fetch next instruction
Description No operation is performed. Only the PC is incremented.

Example:

```
1:    NOP
```

ADD - Add to register

Syntax **ADD** *Rdst, Rsrc1, Rsrc2*
ADD *Rdst, Rsrc1, imm*
Operands

- *Rdst* - Register R[0..3]
- *Rsrc1* - Register R[0..3]
- *Rsrc2* - Register R[0..3]
- *Imm* - 16-bit signed value

Cycles 2 cycles to execute, 4 cycles to fetch next instruction
Description The instruction adds source register to another source register or to a 16-bit signed value and stores the result in the destination register.

Examples:

```
1:    ADD R1, R2, R3         // R1 = R2 + R3

2:    Add R1, R2, 0x1234     // R1 = R2 + 0x1234
```

(continues on next page)

(continued from previous page)

```
3:    .set value1, 0x03      // constant value1=0x03
      Add R1, R2, value1     // R1 = R2 + value1

4:    .global label          // declaration of variable label
      add R1, R2, label      // R1 = R2 + label
        ...
      label: nop             // definition of variable label
```

SUB - Subtract from register

Syntax **SUB** *Rdst, Rsrc1, Rsrc2*
SUB *Rdst, Rsrc1, imm*

Operands

- *Rdst* - Register R[0..3]
- *Rsrc1* - Register R[0..3]
- *Rsrc2* - Register R[0..3]
- *Imm* - 16-bit signed value

Cycles 2 cycles to execute, 4 cycles to fetch next instruction

Description The instruction subtracts the source register from another source register or subtracts a 16-bit signed value from a source register, and stores the result to the destination register.

Examples:

```
1:          SUB R1, R2, R3              // R1 = R2 - R3

2:          sub R1, R2, 0x1234          // R1 = R2 - 0x1234

3:          .set value1, 0x03           // constant value1=0x03
            SUB R1, R2, value1          // R1 = R2 - value1
4:          .global label               // declaration of variable label
            SUB R1, R2, label           // R1 = R2 - label
              ....
  label:    nop                         // definition of variable label
```

AND - Logical AND of two operands

Syntax **AND** *Rdst, Rsrc1, Rsrc2*
AND *Rdst, Rsrc1, imm*

Operands

- *Rdst* - Register R[0..3]
- *Rsrc1* - Register R[0..3]
- *Rsrc2* - Register R[0..3]
- *Imm* - 16-bit signed value

Cycles 2 cycles to execute, 4 cycles to fetch next instruction

Description The instruction does a logical AND of a source register and another source register or a 16-bit signed value and stores the result to the destination register.

Examples:

```
1:        AND R1, R2, R3           // R1 = R2 & R3

2:        AND R1, R2, 0x1234       // R1 = R2 & 0x1234

3:        .set value1, 0x03        // constant value1=0x03
          AND R1, R2, value1       // R1 = R2 & value1

4:        .global label            // declaration of variable label
```

(continues on next page)

(continued from previous page)

```
          AND R1, R2, label       // R1 = R2 & label
              ...
  label:  nop                     // definition of variable label
```

OR - Logical OR of two operands

Syntax **OR** *Rdst, Rsrc1, Rsrc2*
OR *Rdst, Rsrc1, imm*

Operands

- *Rdst* - Register R[0..3]
- *Rsrc1* - Register R[0..3]
- *Rsrc2* - Register R[0..3]
- *Imm* - 16-bit signed value

Cycles 2 cycles to execute, 4 cycles to fetch next instruction

Description The instruction does a logical OR of a source register and another source register or a 16-bit signed value and stores the result to the destination register.

Examples:

```
1:        OR R1, R2, R3           // R1 = R2 || R3

2:        OR R1, R2, 0x1234       // R1 = R2 || 0x1234

3:        .set value1, 0x03       // constant value1=0x03
          OR R1, R2, value1       // R1 = R2 || value1

4:        .global label           // declaration of variable label
          OR R1, R2, label        // R1 = R2 || label
          ...
  label: nop                      // definition of variable label
```

LSH - Logical Shift Left

Syntax **LSH** *Rdst, Rsrc1, Rsrc2*
LSH *Rdst, Rsrc1, imm*

Operands

- *Rdst* - Register R[0..3]
- *Rsrc1* - Register R[0..3]
- *Rsrc2* - Register R[0..3]
- *Imm* - 16-bit signed value

Cycles 2 cycles to execute, 4 cycles to fetch next instruction

Description The instruction does a logical shift to left of the source register by the number of bits from another source register or a 16-bit signed value and stores the result to the destination register.

Note: Shift operations which are greater than 15 bits will have an undefined result.

Examples:

```
1:        LSH R1, R2, R3          // R1 = R2 << R3

2:        LSH R1, R2, 0x03        // R1 = R2 << 0x03

3:        .set value1, 0x03       // constant value1=0x03
          LSH R1, R2, value1      // R1 = R2 << value1

4:        .global label           // declaration of variable label
```

(continues on next page)

(continued from previous page)

```
        LSH R1, R2, label          // R1 = R2 << label
        ...
label:  nop                        // definition of variable label
```

RSH - Logical Shift Right

Syntax **RSH** *Rdst, Rsrc1, Rsrc2*
RSH *Rdst, Rsrc1, imm*
Operands *Rdst* - Register R[0..3] *Rsrc1* - Register R[0..3] *Rsrc2* - Register R[0..3] *Imm* - 16-bit signed value
Cycles 2 cycles to execute, 4 cycles to fetch next instruction
Description The instruction does a logical shift to right of a source register by the number of bits from another source register or a 16-bit signed value and stores the result to the destination register.

Note: Shift operations which are greater than 15 bits will have an undefined result.

Examples:

```
1:      RSH R1, R2, R3             // R1 = R2 >> R3

2:      RSH R1, R2, 0x03           // R1 = R2 >> 0x03

3:      .set value1, 0x03          // constant value1=0x03
        RSH R1, R2, value1         // R1 = R2 >> value1

4:      .global label              // declaration of variable label
        RSH R1, R2, label          // R1 = R2 >> label
label:  nop                        // definition of variable label
```

MOVE –Move to register

Syntax **MOVE** *Rdst, Rsrc*
MOVE *Rdst, imm*
Operands

- *Rdst* –Register R[0..3]
- *Rsrc* –Register R[0..3]
- *Imm* –16-bit signed value

Cycles 2 cycles to execute, 4 cycles to fetch next instruction
Description The instruction moves the value from the source register or a 16-bit signed value to the destination register.

Note: Note that when a label is used as an immediate, the address of the label will be converted from bytes to words. This is because LD, ST, and JUMP instructions expect the address register value to be expressed in words rather than bytes. See the section *Note about addressing* for more details.

Examples:

```
1:      MOVE      R1, R2           // R1 = R2

2:      MOVE      R1, 0x03         // R1 = 0x03

3:      .set      value1, 0x03     // constant value1=0x03
        MOVE      R1, value1       // R1 = value1

4:      .global    label           // declaration of label
        MOVE       R1, label       // R1 = address_of(label) / 4
```

(continues on next page)

(continued from previous page)

```
        ...
label:  nop                             // definition of label
```

ST –Store data to the memory

Syntax **ST** *Rsrc, Rdst, offset*

Operands

- *Rsrc* –Register R[0..3], holds the 16-bit value to store
- *Rdst* –Register R[0..3], address of the destination, in 32-bit words
- *Offset* –13-bit signed value, offset in bytes

Cycles 4 cycles to execute, 4 cycles to fetch next instruction

Description The instruction stores the 16-bit value of Rsrc to the lower half-word of memory with address Rdst+offset. The upper half-word is written with the current program counter (PC) (expressed in words, shifted left by 5 bits) OR' d with Rdst (0..3):

```
Mem[Rdst + offset / 4]{31:0} = {PC[10:0], 3'b0, Rdst, Rsrc[15:0]}
```

The application can use the higher 16 bits to determine which instruction in the ULP program has written any particular word into memory.

Note: Note that the offset specified in bytes is converted to a 32-bit word offset before execution. See the section *Note about addressing* for more details.

Examples:

```
1:          ST   R1, R2, 0x12           // MEM[R2 + 0x12 / 4] = R1

2:          .data                       // Data section definition
  Addr1:    .word      123              // Define label Addr1 16 bit
            .set       offs, 0x00       // Define constant offs
            .text                       // Text section definition
            MOVE       R1, 1            // R1 = 1
            MOVE       R2, Addr1        // R2 = Addr1
            ST         R1, R2, offs     // MEM[R2 +  0 / 4] = R1
                                        // MEM[Addr1 + 0] will be 32'h600001
```

LD –Load data from the memory

Syntax **LD** *Rdst, Rsrc, offset*

Operands

- *Rdst* –Register R[0..3], destination
- *Rsrc* –Register R[0..3], holds address of destination, in 32-bit words
- *Offset* –13-bit signed value, offset in bytes

Cycles 4 cycles to execute, 4 cycles to fetch next instruction

Description The instruction loads the lower 16-bit half-word from memory with address [Rsrc + offset / 4] into the destination register Rdst:

```
Rdst[15:0] = Mem[Rsrc + offset / 4][15:0]
```

Note: Note that the offset specified in bytes is converted to a 32-bit word offset before execution. See the section *Note about addressing* for more details.

Examples:

```
1:        LD   R1, R2, 0x12            // R1 = MEM[R2 + 0x12 / 4]

2:        .data                        // Data section definition
  Addr1:  .word     123                // Define label Addr1 16 bit
          .set      offs, 0x00         // Define constant offs
          .text                        // Text section definition
          MOVE      R1, 1              // R1 = 1
          MOVE      R2, Addr1          // R2 = Addr1 / 4 (address of label is␣
↪converted into words)
          LD        R1, R2, offs       // R1 = MEM[R2 +  0]
                                       // R1 will be 123
```

JUMP –Jump to an absolute address

Syntax **JUMP** *Rdst*
JUMP *ImmAddr*
JUMP *Rdst, Condition*
JUMP *ImmAddr, Condition*

Operands

- *Rdst* –Register R[0..3] containing address to jump to (expressed in 32-bit words)
- *ImmAddr* –13 bits address (expressed in bytes), aligned to 4 bytes
- ***Condition*:**
  - EQ –jump if last ALU operation result was zero
  - OV –jump if last ALU has set overflow flag

Cycles 2 cycles to execute, 2 cycles to fetch next instruction

Description The instruction makes jump to the specified address. Jump can be either unconditional or based on an ALU flag.

Examples:

```
1:        JUMP        R1             // Jump to address in R1 (address in R1 is in␣
↪32-bit words)

2:        JUMP        0x120, EQ      // Jump to address 0x120 (in bytes) if ALU␣
↪result is zero

3:        JUMP        label          // Jump to label
          ...
  label:  nop                        // Definition of label

4:        .global     label          // Declaration of global label

          MOVE        R1, label      // R1 = label (value loaded into R1 is in words)
          JUMP        R1             // Jump to label
          ...
  label:  nop                        // Definition of label
```

JUMPR –Jump to a relative offset (condition based on R0)

Syntax **JUMPR** *Step, Threshold, Condition*

Operands

- *Step* –relative shift from current position, in bytes
- *Threshold* –threshold value for branch condition
- ***Condition*:**
  - *EQ* (equal) –jump if value in R0 == threshold
  - *LT* (less than) –jump if value in R0 < threshold
  - *LE* (less or equal) –jump if value in R0 <= threshold
  - *GT* (greater than) –jump if value in R0 > threshold
  - *GE* (greater or equal) –jump if value in R0 >= threshold

Cycles Conditions *EQ*, *GT* and *LT*: 2 cycles to execute, 2 cycles to fetch next instruction Conditions *LE* and *GE* are implemented in the assembler using two **JUMPR** instructions:

```
// JUMPR target, threshold, LE is implemented as:

         JUMPR target, threshold, EQ
         JUMPR target, threshold, LT

// JUMPR target, threshold, GE is implemented as:

         JUMPR target, threshold, EQ
         JUMPR target, threshold, GT
```

Therefore the execution time will depend on the branches taken: either 2 cycles to execute + 2 cycles to fetch, or 4 cycles to execute + 4 cycles to fetch.

Description The instruction makes a jump to a relative address if condition is true. Condition is the result of comparison of R0 register value and the threshold value.

Examples:

```
1:pos:    JUMPR       16, 20, GE   // Jump to address (position + 16 bytes) if␣
↪value in R0 >= 20

2:        // Down counting loop using R0 register
          MOVE        R0, 16       // load 16 into R0
  label:  SUB         R0, R0, 1    // R0--
          NOP                      // do something
          JUMPR       label, 1, GE // jump to label if R0 >= 1
```

JUMPS –Jump to a relative address (condition based on stage count)

Syntax **JUMPS** *Step, Threshold, Condition*

Operands

- *Step* –relative shift from current position, in bytes
- *Threshold* –threshold value for branch condition
- ***Condition*:**
  - *EQ* (equal) –jump if value in stage_cnt == threshold
  - *LT* (less than) –jump if value in stage_cnt < threshold
  - *LE* (less or equal) - jump if value in stage_cnt <= threshold
  - *GT* (greater than) –jump if value in stage_cnt > threshold
  - *GE* (greater or equal) —jump if value in stage_cnt >= threshold

Cycles 2 cycles to execute, 2 cycles to fetch next instruction:

```
// JUMPS target, threshold, EQ is implemented as:

         JUMPS next, threshold, LT
         JUMPS target, threshold, LE
next:

// JUMPS target, threshold, GT is implemented as:

         JUMPS next, threshold, LE
         JUMPS target, threshold, GE
next:
```

Therefore the execution time will depend on the branches taken: either 2 cycles to execute + 2 cycles to fetch, or 4 cycles to execute + 4 cycles to fetch.

Description The instruction makes a jump to a relative address if condition is true. Condition is the result of comparison of count register value and threshold value.

Examples:

```
1:pos:    JUMPS     16, 20, EQ     // Jump to (position + 16 bytes) if stage_cnt
↪== 20

2:        // Up counting loop using stage count register
          STAGE_RST                // set stage_cnt to 0
  label:  STAGE_INC  1             // stage_cnt++
          NOP                      // do something
          JUMPS       label, 16, LT  // jump to label if stage_cnt < 16
```

STAGE_RST –Reset stage count register

Syntax **STAGE_RST**
Operands No operands
Description The instruction sets the stage count register to 0
Cycles 2 cycles to execute, 4 cycles to fetch next instruction

Examples:

```
1:        STAGE_RST      // Reset stage count register
```

STAGE_INC –Increment stage count register

Syntax **STAGE_INC** *Value*
Operands

- *Value* –8 bits value

Cycles 2 cycles to execute, 4 cycles to fetch next instruction
Description The instruction increments the stage count register by the given value.

Examples:

```
1:        STAGE_INC      10          // stage_cnt += 10

2:        // Up counting loop example:
          STAGE_RST                  // set stage_cnt to 0
  label:  STAGE_INC  1               // stage_cnt++
          NOP                        // do something
          JUMPS      label, 16, LT   // jump to label if stage_cnt < 16
```

STAGE_DEC –Decrement stage count register

Syntax **STAGE_DEC** *Value*
Operands

- *Value* –8 bits value

Cycles 2 cycles to execute, 4 cycles to fetch next instruction
Description The instruction decrements the stage count register by the given value.

Examples:

```
1:        STAGE_DEC      10        // stage_cnt -= 10;

2:        // Down counting loop example
          STAGE_RST                // set stage_cnt to 0
          STAGE_INC  16            // increment stage_cnt to 16
  label:  STAGE_DEC  1             // stage_cnt--;
          NOP                      // do something
          JUMPS      label, 0, GT  // jump to label if stage_cnt > 0
```

HALT –End the program

Syntax **HALT**
Operands No operands
Cycles 2 cycles to execute
Description The instruction halts the ULP coprocessor and restarts the ULP wakeup timer, if it is enabled.

Examples:

```
1:       HALT      // Halt the coprocessor
```

WAKE –Wake up the chip

Syntax **WAKE**
Operands No operands
Cycles 2 cycles to execute, 4 cycles to fetch next instruction
Description The instruction sends an interrupt from the ULP coprocessor to the RTC controller.

- If the SoC is in deep sleep mode, and ULP wakeup is enabled, this causes the SoC to wake up.
- If the SoC is not in deep sleep mode, and ULP interrupt bit (RTC_CNTL_ULP_CP_INT_ENA) is set in RTC_CNTL_INT_ENA_REG register, RTC interrupt will be triggered.

Note that before using WAKE instruction, ULP program may needs to wait until RTC controller is ready to wake up the main CPU. This is indicated using RTC_CNTL_RDY_FOR_WAKEUP bit of RTC_CNTL_LOW_POWER_ST_REG register. If WAKE instruction is executed while RTC_CNTL_RDY_FOR_WAKEUP is zero, it has no effect (wake up does not occur).

Examples:

```
1: is_rdy_for_wakeup:                    // Read RTC_CNTL_RDY_FOR_WAKEUP bit
          READ_RTC_FIELD(RTC_CNTL_LOW_POWER_ST_REG, RTC_CNTL_RDY_FOR_WAKEUP)
          AND r0, r0, 1
          JUMP is_rdy_for_wakeup, eq     // Retry until the bit is set
          WAKE                           // Trigger wake up
          REG_WR 0x006, 24, 24, 0        // Stop ULP timer (clear RTC_CNTL_ULP_CP_
↪SLP_TIMER_EN)
          HALT                           // Stop the ULP program
          // After these instructions, SoC will wake up,
          // and ULP will not run again until started by the main program.
```

SLEEP –set ULP wakeup timer period

Syntax **SLEEP** *sleep_reg*
Operands

- *sleep_reg* –0..4, selects one of `SENS_ULP_CP_SLEEP_CYCx_REG` registers.

Cycles 2 cycles to execute, 4 cycles to fetch next instruction
Description The instruction selects which of the `SENS_ULP_CP_SLEEP_CYCx_REG` (x = 0..4) register values is to be used by the ULP wakeup timer as wakeup period. By default, the value from `SENS_ULP_CP_SLEEP_CYC0_REG` is used.

Examples:

```
1:        SLEEP     1          // Use period set in SENS_ULP_CP_SLEEP_CYC1_REG

2:        .set sleep_reg, 4    // Set constant
          SLEEP  sleep_reg     // Use period set in SENS_ULP_CP_SLEEP_CYC4_REG
```

WAIT –wait some number of cycles

Syntax **WAIT** *Cycles*
Operands

- *Cycles* –number of cycles for wait

Cycles 2 + *Cycles* cycles to execute, 4 cycles to fetch next instruction
Description The instruction delays for given number of cycles.

Examples:

```
1:        WAIT     10          // Do nothing for 10 cycles

2:        .set  wait_cnt, 10   // Set a constant
          WAIT  wait_cnt       // wait for 10 cycles
```

TSENS –do measurement with temperature sensor

Syntax

- **TSENS** *Rdst, Wait_Delay*

Operands

- *Rdst* –Destination Register R[0..3], result will be stored to this register
- *Wait_Delay* –number of cycles used to perform the measurement

Cycles 2 + *Wait_Delay* + 3 * TSENS_CLK to execute, 4 cycles to fetch next instruction
Description The instruction performs measurement using TSENS and stores the result into a general purpose register.

Examples:

```
1:        TSENS     R1, 1000     // Measure temperature sensor for 1000 cycles,
                                 // and store result to R1
```

ADC –do measurement with ADC

Syntax

- **ADC** *Rdst, Sar_sel, Mux*
- **ADC** *Rdst, Sar_sel, Mux, 0* —deprecated form

Operands

- *Rdst* –Destination Register R[0..3], result will be stored to this register
- *Sar_sel* –Select ADC: 0 = SARADC1, 1 = SARADC2
- *Mux* - Enable ADC channel. Channel number is [Mux-1]. If the user passes Mux value 1, then ADC channel 0 gets used.

Cycles `23 + max(1, SAR_AMP_WAIT1) + max(1, SAR_AMP_WAIT2) + max(1, SAR_AMP_WAIT3) + SARx_SAMPLE_CYCLE + SARx_SAMPLE_BIT` cycles to execute, 4 cycles to fetch next instruction
Description The instruction makes measurements from ADC.

Examples:

```
.. only:: esp32
```

1: ADC R1, 0, 1 // Measure value using ADC1 channel 0 and store result into R1

I2C_RD - read single byte from I2C slave

Syntax

- **I2C_RD** *Sub_addr, High, Low, Slave_sel*

Operands

- *Sub_addr* –Address within the I2C slave to read.
- *High*, *Low* —Define range of bits to read. Bits outside of [High, Low] range are masked.
- *Slave_sel* - Index of I2C slave address to use.

Cycles Execution time mostly depends on I2C communication time. 4 cycles to fetch next instruction.

Description `I2C_RD` instruction reads one byte from I2C slave with index `Slave_sel`. Slave address (in 7-bit format) has to be set in advance into *SENS_I2C_SLAVE_ADDRx* register field, where `x == Slave_sel`. 8 bits of read result is stored into *R0* register.

Examples:

```
1:        I2C_RD      0x10, 7, 0, 0      // Read byte from sub-address 0x10 of␣
↪slave with address set in SENS_I2C_SLAVE_ADDR0
```

I2C_WR - write single byte to I2C slave

Syntax

- **I2C_WR** *Sub_addr, Value, High, Low, Slave_sel*

Operands

- *Sub_addr* –Address within the I2C slave to write.
- *Value* –8-bit value to be written.
- *High*, *Low* —Define range of bits to write. Bits outside of [High, Low] range are masked.
- *Slave_sel* - Index of I2C slave address to use.

Cycles Execution time mostly depends on I2C communication time. 4 cycles to fetch next instruction.

Description `I2C_WR` instruction writes one byte to I2C slave with index `Slave_sel`. Slave address (in 7-bit format) has to be set in advance into *SENS_I2C_SLAVE_ADDRx* register field, where `x == Slave_sel`.

Examples:

```
1:        I2C_WR      0x20, 0x33, 7, 0, 1      // Write byte 0x33 to sub-address␣
↪0x20 of slave with address set in SENS_I2C_SLAVE_ADDR1.
```

REG_RD –read from peripheral register

Syntax **REG_RD** *Addr, High, Low*

Operands

- *Addr* –Register address, in 32-bit words
- *High* –Register end bit number
- *Low* –Register start bit number

Cycles 4 cycles to execute, 4 cycles to fetch next instruction

Description The instruction reads up to 16 bits from a peripheral register into a general purpose register: `R0 = REG[Addr][High:Low]`.

This instruction can access registers in RTC_CNTL, RTC_IO, SENS, and RTC_I2C peripherals. Address of the register, as seen from the ULP, can be calculated from the address of the same register on the DPORT bus as follows:

```
addr_ulp = (addr_dport - DR_REG_RTCCNTL_BASE) / 4
```

Examples:

```
1:        REG_RD      0x120, 7, 4     // load 4 bits: R0 = {12'b0, REG[0x120][7:4]}
```

REG_WR –write to peripheral register

Syntax **REG_WR** *Addr, High, Low, Data*

Operands

- *Addr* –Register address, in 32-bit words.
- *High* –Register end bit number
- *Low* –Register start bit number
- *Data* –Value to write, 8 bits

Cycles 8 cycles to execute, 4 cycles to fetch next instruction

Description The instruction writes up to 8 bits from an immediate data value into a peripheral register: `REG[Addr][High:Low] = data`.

This instruction can access registers in RTC_CNTL, RTC_IO, SENS, and RTC_I2C peripherals. Address of the register, as seen from the ULP, can be calculated from the address of the same register on the DPORT bus as follows:

```
addr_ulp = (addr_dport - DR_REG_RTCCNTL_BASE) / 4
```

Examples:

```
1:        REG_WR      0x120, 7, 0, 0x10    // set 8 bits: REG[0x120][7:0] = 0x10
```

Convenience macros for peripheral registers access ULP source files are passed through C preprocessor before the assembler. This allows certain macros to be used to facilitate access to peripheral registers.

Some existing macros are defined in `soc/soc_ulp.h` header file. These macros allow access to the fields of peripheral registers by their names. Peripheral registers names which can be used with these macros are the ones defined in `soc/rtc_cntl_reg.h`, `soc/rtc_io_reg.h`, `soc/sens_reg.h`, and `soc/rtc_i2c_reg.h`.

READ_RTC_REG(rtc_reg, low_bit, bit_width) Read up to 16 bits from rtc_reg[low_bit + bit_width - 1 : low_bit] into R0. For example:

```
#include "soc/soc_ulp.h"
#include "soc/rtc_cntl_reg.h"

/* Read 16 lower bits of RTC_CNTL_TIME0_REG into R0 */
READ_RTC_REG(RTC_CNTL_TIME0_REG, 0, 16)
```

READ_RTC_FIELD(rtc_reg, field) Read from a field in rtc_reg into R0, up to 16 bits. For example:

```
#include "soc/soc_ulp.h"
#include "soc/sens_reg.h"

/* Read 8-bit SENS_TSENS_OUT field of SENS_SAR_SLAVE_ADDR3_REG into R0 */
READ_RTC_FIELD(SENS_SAR_SLAVE_ADDR3_REG, SENS_TSENS_OUT)
```

WRITE_RTC_REG(rtc_reg, low_bit, bit_width, value) Write immediate value into rtc_reg[low_bit + bit_width - 1 : low_bit], bit_width <= 8. For example:

```
#include "soc/soc_ulp.h"
#include "soc/rtc_io_reg.h"

/* Set BIT(2) of RTC_GPIO_OUT_DATA_W1TS field in RTC_GPIO_OUT_W1TS_REG */
WRITE_RTC_REG(RTC_GPIO_OUT_W1TS_REG, RTC_GPIO_OUT_DATA_W1TS_S + 2, 1, 1)
```

WRITE_RTC_FIELD(rtc_reg, field, value) Write immediate value into a field in rtc_reg, up to 8 bits. For example:

```
#include "soc/soc_ulp.h"
#include "soc/rtc_cntl_reg.h"

/* Set RTC_CNTL_ULP_CP_SLP_TIMER_EN field of RTC_CNTL_STATE0_REG to 0 */
WRITE_RTC_FIELD(RTC_CNTL_STATE0_REG, RTC_CNTL_ULP_CP_SLP_TIMER_EN, 0)
```

Programming ULP FSM coprocessor using C macros (legacy)

In addition to the existing binutils port for the ESP32 ULP coprocessor, it is possible to generate programs for the ULP FSM coprocessor by embedding assembly-like macros into an ESP32 application. Here is an example how this can be done:

```
const ulp_insn_t program[] = {
    I_MOVI(R3, 16),          // R3 <- 16
    I_LD(R0, R3, 0),         // R0 <- RTC_SLOW_MEM[R3 + 0]
    I_LD(R1, R3, 1),         // R1 <- RTC_SLOW_MEM[R3 + 1]
    I_ADDR(R2, R0, R1),      // R2 <- R0 + R1
    I_ST(R2, R3, 2),         // R2 -> RTC_SLOW_MEM[R2 + 2]
    I_HALT()
};
size_t load_addr = 0;
size_t size = sizeof(program)/sizeof(ulp_insn_t);
ulp_process_macros_and_load(load_addr, program, &size);
ulp_run(load_addr);
```

The `program` array is an array of `ulp_insn_t`, i.e. ULP coprocessor instructions. Each `I_XXX` preprocessor define translates into a single 32-bit instruction. Arguments of these preprocessor defines can be register numbers (`R0`—`R3`) and literal constants. See the API reference section at the end of this guide for descriptions of instructions and arguments they take.

Note: Because some of the instruction macros expand to inline function calls, defining such array in global scope will cause the compiler to produce an "initializer element is not constant" error. To fix this error, move the definition of instructions array into local scope.

Note: Load, store and move instructions use **addresses expressed in 32-bit words**. Address 0 corresponds to the first word of `RTC_SLOW_MEM`. This is different to how address arguments are handled in assembly code of the same instructions. See the section *Note about addressing* for more details for reference.

To generate branch instructions, special `M_` preprocessor defines are used. `M_LABEL` define can be used to define a branch target. Label identifier is a 16-bit integer. `M_Bxxx` defines can be used to generate branch instructions with target set to a particular label.

Implementation note: these `M_` preprocessor defines will be translated into two ulp_insn_t values: one is a token value which contains label number, and the other is the actual instruction. `ulp_process_macros_and_load` function resolves the label number to the address, modifies the branch instruction to use the correct address, and removes the the extra `ulp_insn_t` token which contains the label numer.

Here is an example of using labels and branches:

```
const ulp_insn_t program[] = {
    I_MOVI(R0, 34),          // R0 <- 34
    M_LABEL(1),              // label_1
    I_MOVI(R1, 32),          // R1 <- 32
    I_LD(R1, R1, 0),         // R1 <- RTC_SLOW_MEM[R1]
    I_MOVI(R2, 33),          // R2 <- 33
    I_LD(R2, R2, 0),         // R2 <- RTC_SLOW_MEM[R2]
    I_SUBR(R3, R1, R2),      // R3 <- R1 - R2
    I_ST(R3, R0, 0),         // R3 -> RTC_SLOW_MEM[R0 + 0]
    I_ADDI(R0, R0, 1),       // R0++
    M_BL(1, 64),             // if (R0 < 64) goto label_1
    I_HALT(),
};
RTC_SLOW_MEM[32] = 42;
RTC_SLOW_MEM[33] = 18;
size_t load_addr = 0;
size_t size = sizeof(program)/sizeof(ulp_insn_t);
ulp_process_macros_and_load(load_addr, program, &size);
ulp_run(load_addr);
```

API Reference

Header File

- components/ulp/include/esp32/ulp.h

Functions

static inline uint32_t **SOC_REG_TO_ULP_PERIPH_SEL**(uint32_t reg)

Map SoC peripheral register to periph_sel field of RD_REG and WR_REG instructions.

Parameters **reg** –peripheral register in RTC_CNTL_, RTC_IO_, SENS_, RTC_I2C peripherals.

Returns periph_sel value for the peripheral to which this register belongs.

Unions

union **ulp_insn**

#include <ulp.h> Instruction format structure.

All ULP instructions are 32 bit long. This union contains field layouts used by all of the supported instructions. This union also includes a special "macro"instruction layout. This is not a real instruction which can be executed by the CPU. It acts as a token which is removed from the program by the ulp_process_macros_and_load function.

These structures are not intended to be used directly. Preprocessor definitions provided below fill the fields of these structure with the right arguments.

Public Members

uint32_t **cycles**

Number of cycles to sleep

TBD, cycles used for measurement

uint32_t **unused**

Unused

uint32_t **opcode**

Opcode (OPCODE_DELAY)

Opcode (OPCODE_ST)

Opcode (OPCODE_LD)

Opcode (OPCODE_HALT)

Opcode (OPCODE_BRANCH)

Opcode (OPCODE_ALU)

Opcode (OPCODE_WR_REG)

Opcode (OPCODE_RD_REG)

Opcode (OPCODE_ADC)

Opcode (OPCODE_TSENS)

Opcode (OPCODE_I2C)

Opcode (OPCODE_END)

Opcode (OPCODE_MACRO)

struct *ulp_insn*::[anonymous] **delay**

Format of DELAY instruction

uint32_t **dreg**

Register which contains data to store

Register where the data should be loaded to

Register which contains target PC, expressed in words (used if .reg == 1)

Destination register

Register where to store ADC result

Register where to store temperature measurement result

Destination register (for SUB_OPCODE_MACRO_LABELPC) >

uint32_t **sreg**

Register which contains address in RTC memory (expressed in words)

Register with operand A

uint32_t **unused1**

Unused

uint32_t **offset**

Offset to add to sreg

Absolute value of target PC offset w.r.t. current PC, expressed in words

uint32_t **unused2**

Unused

uint32_t **sub_opcode**

Sub opcode (SUB_OPCODE_ST)

Sub opcode (SUB_OPCODE_BX)

Sub opcode (SUB_OPCODE_B)

Sub opcode (SUB_OPCODE_BS)

Sub opcode (SUB_OPCODE_ALU_REG)

Sub opcode (SUB_OPCODE_ALU_CNT)

Sub opcode (SUB_OPCODE_ALU_IMM)

Sub opcode (SUB_OPCODE_WAKEUP)

Sub opcode (SUB_OPCODE_SLEEP)

SUB_OPCODE_MACRO_LABEL or SUB_OPCODE_MACRO_BRANCH or SUB_OPCODE_MACRO_LABELPC

struct *ulp_insn*::[anonymous] **st**

Format of ST instruction

struct *ulp_insn*::[anonymous] **ld**

Format of LD instruction

struct *ulp_insn*::[anonymous] **halt**

Format of HALT instruction

uint32_t **addr**

Target PC, expressed in words (used if .reg == 0)

Address within either RTC_CNTL, RTC_IO, or SARADC

uint32_t **reg**

Target PC in register (1) or immediate (0)

uint32_t **type**

Jump condition (BX_JUMP_TYPE_xxx)

struct *ulp_insn*::[anonymous] **bx**

Format of BRANCH instruction (absolute address)

uint32_t **imm**

Immediate value to compare against

Immediate value of operand

Immediate value of operand B

uint32_t **cmp**

Comparison to perform: B_CMP_L or B_CMP_GE

Comparison to perform: JUMPS_LT, JUMPS_GE or JUMPS_LE

uint32_t **sign**

Sign of target PC offset: 0: positive, 1: negative

struct *ulp_insn*::[anonymous] **b**

Format of BRANCH instruction (relative address, conditional on R0)

struct *ulp_insn*::[anonymous] **bs**

Format of BRANCH instruction (relative address, conditional on the stage counter)

uint32_t **treg**

Register with operand B

uint32_t **sel**

Operation to perform, one of ALU_SEL_xxx

Operation to perform, one of ALU_SEL_Sxxx

struct *ulp_insn*::[anonymous] **alu_reg**

Format of ALU instruction (both sources are registers)

struct *ulp_insn*::[anonymous] **alu_reg_s**

Format of ALU instruction (stage counter and an immediate)

struct *ulp_insn*::[anonymous] **alu_imm**

Format of ALU instruction (one source is an immediate)

uint32_t **periph_sel**

Select peripheral: RTC_CNTL (0), RTC_IO(1), SARADC(2)

uint32_t **data**

8 bits of data to write

8 bits of data for write operation

uint32_t **low**

Low bit

uint32_t **high**

High bit

struct *ulp_insn*::[anonymous] **wr_reg**

Format of WR_REG instruction

struct *ulp_insn*::[anonymous] **rd_reg**

Format of RD_REG instruction

uint32_t **mux**

Select SARADC pad (mux + 1)

uint32_t **sar_sel**

Select SARADC0 (0) or SARADC1 (1)

struct *ulp_insn*::[anonymous] **adc**

Format of ADC instruction

uint32_t **wait_delay**

Cycles to wait after measurement is done

uint32_t **reserved**

Reserved, set to 0

struct *ulp_insn*::[anonymous] **tsens**

Format of TSENS instruction

uint32_t **i2c_addr**

I2C slave address

uint32_t **low_bits**

low bit of range for write operation (lower bits are masked)

uint32_t **high_bits**

high bit of range for write operation (higher bits are masked)

uint32_t **i2c_sel**

index of slave address register [7:0]

uint32_t **rw**

Write (1) or read (0)

struct *ulp_insn*::[anonymous] **i2c**

Format of I2C instruction

uint32_t **wakeup**

Set to 1 to wake up chip

struct *ulp_insn*::[anonymous] **end**

Format of END instruction with wakeup

uint32_t **cycle_sel**

Select which one of SARADC_ULP_CP_SLEEP_CYCx_REG to get the sleep duration from

struct *ulp_insn*::[anonymous] **sleep**

Format of END instruction with sleep

uint32_t **label**

Label number

struct *ulp_insn*::[anonymous] **macro**

Format of tokens used by MACROs

uint32_t **instruction**

Encoded instruction for ULP coprocessor

Macros

ULP_FSM_PREPARE_SLEEP_CYCLES

Cycles spent by FSM preparing ULP for sleep

ULP_FSM_WAKEUP_SLEEP_CYCLES

Cycles spent by FSM waking up ULP from sleep

R0

general purpose register 0

R1

general purpose register 1

R2

general purpose register 2

R3

general purpose register 3

OPCODE_WR_REG

Instruction: write peripheral register (RTC_CNTL/RTC_IO/SARADC)

OPCODE_RD_REG

Instruction: read peripheral register (RTC_CNTL/RTC_IO/SARADC)

RD_REG_PERIPH_RTC_CNTL

Identifier of RTC_CNTL peripheral for RD_REG and WR_REG instructions

RD_REG_PERIPH_RTC_IO

Identifier of RTC_IO peripheral for RD_REG and WR_REG instructions

RD_REG_PERIPH_SENS

Identifier of SARADC peripheral for RD_REG and WR_REG instructions

RD_REG_PERIPH_RTC_I2C

Identifier of RTC_I2C peripheral for RD_REG and WR_REG instructions

OPCODE_I2C

Instruction: read/write I2C

SUB_OPCODE_I2C_RD

I2C read

SUB_OPCODE_I2C_WR

I2C write

OPCODE_DELAY

Instruction: delay (nop) for a given number of cycles

OPCODE_ADC

Instruction: SAR ADC measurement

OPCODE_ST

Instruction: store indirect to RTC memory

SUB_OPCODE_ST

Store 32 bits, 16 MSBs contain PC, 16 LSBs contain value from source register

OPCODE_ALU

Arithmetic instructions

SUB_OPCODE_ALU_REG

Arithmetic instruction, both source values are in register

SUB_OPCODE_ALU_IMM

Arithmetic instruction, one source value is an immediate

SUB_OPCODE_ALU_CNT

Arithmetic instruction, stage counter and an immediate

ALU_SEL_ADD

Addition

ALU_SEL_SUB

Subtraction

ALU_SEL_AND

Logical AND

ALU_SEL_OR

Logical OR

ALU_SEL_MOV

Copy value (immediate to destination register or source register to destination register

ALU_SEL_LSH

Shift left by given number of bits

ALU_SEL_RSH

Shift right by given number of bits

ALU_SEL_SINC

Increment the stage counter

ALU_SEL_SDEC

Decrement the stage counter

ALU_SEL_SRST

Reset the stage counter

OPCODE_BRANCH

Branch instructions

SUB_OPCODE_BX

Branch to absolute PC (immediate or in register)

SUB_OPCODE_BR

Branch to relative PC, conditional on R0

SUB_OPCODE_BS

Branch to relative PC, conditional on the stage counter

BX_JUMP_TYPE_DIRECT

Unconditional jump

BX_JUMP_TYPE_ZERO

Branch if last ALU result is zero

BX_JUMP_TYPE_OVF

Branch if last ALU operation caused and overflow

SUB_OPCODE_B

Branch to a relative offset

B_CMP_L

Branch if R0 is less than an immediate

B_CMP_GE

Branch if R0 is greater than or equal to an immediate

JUMPS_LT

Branch if the stage counter <

JUMPS_GE

Branch if the stage counter >=

JUMPS_LE

Branch if the stage counter <=

OPCODE_END

Stop executing the program

SUB_OPCODE_END

Stop executing the program and optionally wake up the chip

SUB_OPCODE_SLEEP

Stop executing the program and run it again after selected interval

OPCODE_TSENS

Instruction: temperature sensor measurement

OPCODE_HALT

Halt the coprocessor

OPCODE_LD

Indirect load lower 16 bits from RTC memory

OPCODE_MACRO

Not a real opcode. Used to identify labels and branches in the program

SUB_OPCODE_MACRO_LABEL

Label macro

SUB_OPCODE_MACRO_BRANCH

Branch macro

SUB_OPCODE_MACRO_LABELPC

Label pointer macro

I_DELAY(cycles_)

Delay (nop) for a given number of cycles

I_HALT()

Halt the coprocessor.

This instruction halts the coprocessor, but keeps ULP timer active. As such, ULP program will be restarted again by timer. To stop the program and prevent the timer from restarting the program, use I_END(0) instruction.

I_WR_REG(reg, low_bit, high_bit, val)

Write literal value to a peripheral register

reg[high_bit : low_bit] = val This instruction can access RTC_CNTL_, RTC_IO_, SENS_, and RTC_I2C peripheral registers.

I_RD_REG(reg, low_bit, high_bit)

Read from peripheral register into R0

R0 = reg[high_bit : low_bit] This instruction can access RTC_CNTL_, RTC_IO_, SENS_, and RTC_I2C peripheral registers.

I_WR_REG_BIT(reg, shift, val)

Set or clear a bit in the peripheral register.

Sets bit (1 << shift) of register reg to value val. This instruction can access RTC_CNTL_, RTC_IO_, SENS_, and RTC_I2C peripheral registers.

I_WAKE()

Wake the SoC from deep sleep.

This instruction initiates wake up from deep sleep. Use esp_deep_sleep_enable_ulp_wakeup to enable deep sleep wakeup triggered by the ULP before going into deep sleep. Note that ULP program will still keep running until the I_HALT instruction, and it will still be restarted by timer at regular intervals, even when the SoC is woken up.

To stop the ULP program, use I_HALT instruction.

To disable the timer which start ULP program, use I_END() instruction. I_END instruction clears the RTC_CNTL_ULP_CP_SLP_TIMER_EN_S bit of RTC_CNTL_STATE0_REG register, which controls the ULP timer.

I_END()

Stop ULP program timer.

This is a convenience macro which disables the ULP program timer. Once this instruction is used, ULP program will not be restarted anymore until ulp_run function is called.

ULP program will continue running after this instruction. To stop the currently running program, use I_HALT().

I_SLEEP_CYCLE_SEL(timer_idx)

Select the time interval used to run ULP program.

This instructions selects which of the SENS_SLEEP_CYCLES_Sx registers' value is used by the ULP program timer. When the ULP program stops at I_HALT instruction, ULP program timer start counting. When

the counter reaches the value of the selected SENS_SLEEP_CYCLES_Sx register, ULP program start running again from the start address (passed to the ulp_run function). There are 5 SENS_SLEEP_CYCLES_Sx registers, so 0 <= timer_idx < 5.

By default, SENS_SLEEP_CYCLES_S0 register is used by the ULP program timer.

I_TSENS (reg_dest, delay)

Perform temperature sensor measurement and store it into reg_dest.

Delay can be set between 1 and ((1 << 14) - 1). Higher values give higher measurement resolution.

I_ADC (reg_dest, adc_idx, pad_idx)

Perform ADC measurement and store result in reg_dest.

adc_idx selects ADC (0 or 1). pad_idx selects ADC pad (0 - 7).

I_ST (reg_val, reg_addr, offset_)

Store value from register reg_val into RTC memory.

The value is written to an offset calculated by adding value of reg_addr register and offset_ field (this offset is expressed in 32-bit words). 32 bits written to RTC memory are built as follows:

- bits [31:21] hold the PC of current instruction, expressed in 32-bit words
- bits [20:18] = 3' b0
- bits [17:16] reg_addr (0..3)
- bits [15:0] are assigned the contents of reg_val

RTC_SLOW_MEM[addr + offset_] = { insn_PC[10:0], 3' b0, reg_addr, reg_val[15:0] }

I_LD (reg_dest, reg_addr, offset_)

Load value from RTC memory into reg_dest register.

Loads 16 LSBs from RTC memory word given by the sum of value in reg_addr and value of offset_.

I_BL (pc_offset, imm_value)

Branch relative if R0 less than immediate value.

pc_offset is expressed in words, and can be from -127 to 127 imm_value is a 16-bit value to compare R0 against

I_BGE (pc_offset, imm_value)

Branch relative if R0 greater or equal than immediate value.

pc_offset is expressed in words, and can be from -127 to 127 imm_value is a 16-bit value to compare R0 against

I_BXR (reg_pc)

Unconditional branch to absolute PC, address in register.

reg_pc is the register which contains address to jump to. Address is expressed in 32-bit words.

I_BXI (imm_pc)

Unconditional branch to absolute PC, immediate address.

Address imm_pc is expressed in 32-bit words.

I_BXZR (reg_pc)

Branch to absolute PC if ALU result is zero, address in register.

reg_pc is the register which contains address to jump to. Address is expressed in 32-bit words.

I_BXZI (imm_pc)

Branch to absolute PC if ALU result is zero, immediate address.

Address imm_pc is expressed in 32-bit words.

I_BXFR (reg_pc)

Branch to absolute PC if ALU overflow, address in register

reg_pc is the register which contains address to jump to. Address is expressed in 32-bit words.

I_BXFI (imm_pc)

Branch to absolute PC if ALU overflow, immediate address

Address imm_pc is expressed in 32-bit words.

I_ADDR (reg_dest, reg_src1, reg_src2)

Addition: dest = src1 + src2

I_SUBR (reg_dest, reg_src1, reg_src2)

Subtraction: dest = src1 - src2

I_ANDR (reg_dest, reg_src1, reg_src2)

Logical AND: dest = src1 & src2

I_ORR (reg_dest, reg_src1, reg_src2)

Logical OR: dest = src1 | src2

I_MOVR (reg_dest, reg_src)

Copy: dest = src

I_LSHR (reg_dest, reg_src, reg_shift)

Logical shift left: dest = src << shift

I_RSHR (reg_dest, reg_src, reg_shift)

Logical shift right: dest = src >> shift

I_ADDI (reg_dest, reg_src, imm_)

Add register and an immediate value: dest = src1 + imm

I_SUBI (reg_dest, reg_src, imm_)

Subtract register and an immediate value: dest = src - imm

I_ANDI (reg_dest, reg_src, imm_)

Logical AND register and an immediate value: dest = src & imm

I_ORI (reg_dest, reg_src, imm_)

Logical OR register and an immediate value: dest = src | imm

I_MOVI (reg_dest, imm_)

Copy an immediate value into register: dest = imm

I_LSHI (reg_dest, reg_src, imm_)

Logical shift left register value by an immediate: dest = src << imm

I_RSHI (reg_dest, reg_src, imm_)

Logical shift right register value by an immediate: dest = val >> imm

M_LABEL (label_num)

Define a label with number label_num.

This is a macro which doesn't generate a real instruction. The token generated by this macro is removed by ulp_process_macros_and_load function. Label defined using this macro can be used in branch macros defined below.

M_BRANCH (label_num)

Token macro used by M_B and M_BX macros. Not to be used directly.

M_LABELPC (label_num)

Token macro used by M_MOVL macro. Not to be used directly.

M_MOVL(reg_dest, label_num)

Macro: Move the program counter at the given label into the register. This address can then be used with I_BXR, I_BXZR, I_BXFR, etc.

This macro generates two ulp_insn_t values separated by a comma, and should be used when defining contents of ulp_insn_t arrays. First value is not a real instruction; it is a token which is removed by ulp_process_macros_and_load function.

M_BL(label_num, imm_value)

Macro: branch to label label_num if R0 is less than immediate value.

This macro generates two ulp_insn_t values separated by a comma, and should be used when defining contents of ulp_insn_t arrays. First value is not a real instruction; it is a token which is removed by ulp_process_macros_and_load function.

M_BGE(label_num, imm_value)

Macro: branch to label label_num if R0 is greater or equal than immediate value

This macro generates two ulp_insn_t values separated by a comma, and should be used when defining contents of ulp_insn_t arrays. First value is not a real instruction; it is a token which is removed by ulp_process_macros_and_load function.

M_BX(label_num)

Macro: unconditional branch to label

This macro generates two ulp_insn_t values separated by a comma, and should be used when defining contents of ulp_insn_t arrays. First value is not a real instruction; it is a token which is removed by ulp_process_macros_and_load function.

M_BXZ(label_num)

Macro: branch to label if ALU result is zero

This macro generates two ulp_insn_t values separated by a comma, and should be used when defining contents of ulp_insn_t arrays. First value is not a real instruction; it is a token which is removed by ulp_process_macros_and_load function.

M_BXF(label_num)

Macro: branch to label if ALU overflow

This macro generates two ulp_insn_t values separated by a comma, and should be used when defining contents of ulp_insn_t arrays. First value is not a real instruction; it is a token which is removed by ulp_process_macros_and_load function.

I_STAGE_INC(imm_)

Increment the stage counter by immediate value

I_STAGE_DEC(imm_)

Decrement the stage counter by immediate value

I_STAGE_RST()

Reset the stage counter

M_BSLT(label_num, imm_value)

Macro: branch to label if the stage counter is less than immediate value

This macro generates two ulp_insn_t values separated by a comma, and should be used when defining contents of ulp_insn_t arrays. First value is not a real instruction; it is a token which is removed by ulp_process_macros_and_load function.

M_BSGE(label_num, imm_value)

Macro: branch to label if the stage counter is greater than or equal to immediate value

This macro generates two ulp_insn_t values separated by a comma, and should be used when defining contents of ulp_insn_t arrays. First value is not a real instruction; it is a token which is removed by ulp_process_macros_and_load function.

M_BSLE (label_num, imm_value)

Macro: branch to label if the stage counter is less than or equal to immediate value

This macro generates two ulp_insn_t values separated by a comma, and should be used when defining contents of ulp_insn_t arrays. First value is not a real instruction; it is a token which is removed by ulp_process_macros_and_load function.

M_BSEQ (label_num, imm_value)

Macro: branch to label if the stage counter is equal to immediate value. Implemented using two JUMPS instructions: JUMPS next, imm_value, LT JUMPS label_num, imm_value, LE

This macro generates three ulp_insn_t values separated by commas, and should be used when defining contents of ulp_insn_t arrays. Second value is not a real instruction; it is a token which is removed by ulp_process_macros_and_load function.

M_BSGT (label_num, imm_value)

Macro: branch to label if the stage counter is greater than immediate value. Implemented using two instructions: JUMPS next, imm_value, LE JUMPS label_num, imm_value, GE

This macro generates three ulp_insn_t values separated by commas, and should be used when defining contents of ulp_insn_t arrays. Second value is not a real instruction; it is a token which is removed by ulp_process_macros_and_load function.

I_JUMPS (pc_offset, imm_value, comp_type)

Branch relative if (stage counter [comp_type] [imm_value]) evaluates to true.

pc_offset is expressed in words, and can be from -127 to 127 imm_value is an 8-bit value to compare the stage counter against comp_type is the type of comparison to perform: JUMPS_LT (<), JUMPS_GE (>=) or JUMPS_LE (<=)

I_I2C_RW (sub_addr, val, low_bit, high_bit, slave_sel, rw_bit)

Perform an I2C transaction with a slave device. I_I2C_READ and I_I2C_WRITE are provided for convenience, instead of using this directly.

Slave address (in 7-bit format) has to be set in advance into SENS_I2C_SLAVE_ADDRx register field, where x == slave_sel. For read operations, 8 bits of read result is stored into R0 register. For write operations, val will be written to sub_addr at [high_bit:low_bit]. Bits outside of this range are masked.

I_I2C_READ (slave_sel, sub_addr)

Read a byte from the sub address of an I2C slave, and store the result in R0.

Slave address (in 7-bit format) has to be set in advance into SENS_I2C_SLAVE_ADDRx register field, where x == slave_sel.

I_I2C_WRITE (slave_sel, sub_addr, val)

Write a byte to the sub address of an I2C slave.

Slave address (in 7-bit format) has to be set in advance into SENS_I2C_SLAVE_ADDRx register field, where x == slave_sel.

RTC_SLOW_MEM

RTC slow memory, 8k size

4.31.3 Compiling the ULP Code

To compile the ULP FSM code as part of the component, the following steps must be taken:

1. The ULP FSM code, written in assembly, must be added to one or more files with *.S* extension. These files must be placed into a separate directory inside the component directory, for instance, *ulp/*.
2. Call `ulp_embed_binary` from the component CMakeLists.txt after registration. For example:

```
...
idf_component_register()

set(ulp_app_name ulp_${COMPONENT_NAME})
set(ulp_s_sources ulp/ulp_assembly_source_file.S)
set(ulp_exp_dep_srcs "ulp_c_source_file.c")

ulp_embed_binary(${ulp_app_name} "${ulp_s_sources}" "${ulp_exp_dep_srcs}")
```

The first argument to `ulp_embed_binary` specifies the ULP FSM binary name. The name specified here will also be used by other generated artifacts such as the ELF file, map file, header file and linker export file. The second argument specifies the ULP FSM assembly source files. Finally, the third argument specifies the list of component source files which include the header file to be generated. This list is needed to build the dependencies correctly and ensure that the generated header file will be created before any of these files are compiled. See the section below for the concept of generated header files for ULP applications.

3. Build the application as usual (e.g. *idf.py app*).
   Inside, the build system will take the following steps to build ULP FSM program:
   1. **Run each assembly file (foo.S) through the C preprocessor.** This step generates the preprocessed assembly files (foo.ulp.S) in the component build directory. This step also generates dependency files (foo.ulp.d).
   2. **Run preprocessed assembly sources through the assembler.** This produces object (foo.ulp.o) and listing (foo.ulp.lst) files. Listing files are generated for debugging purposes and are not used at later stages of the build process.
   3. **Run the linker script template through the C preprocessor.** The template is located in `components/ulp/ld` directory.
   4. **Link the object files into an output ELF file** (`ulp_app_name.elf`). The Map file (`ulp_app_name.map`) generated at this stage may be useful for debugging purposes.
   5. **Dump the contents of the ELF file into a binary** (`ulp_app_name.bin`) which can then be embedded into the application.
   6. **Generate a list of global symbols** (`ulp_app_name.sym`) in the ELF file using `esp32ulp-elf-nm`.
   7. **Create an LD export script and a header file** (`ulp_app_name.ld` and `ulp_app_name.h`) containing the symbols from `ulp_app_name.sym`. This is done using the `esp32ulp_mapgen.py` utility.
   8. **Add the generated binary to the list of binary files** to be embedded into the application.

4.31.4 Accessing the ULP FSM Program Variables

Global symbols defined in the ULP FSM program may be used inside the main program.

For example, the ULP FSM program may define a variable `measurement_count` which will define the number of ADC measurements the program needs to make before waking up the chip from deep sleep:

```
                        .global measurement_count
measurement_count:      .long 0

                        // later, use measurement_count
                        move r3, measurement_count
                        ld r3, r3, 0
```

The main program needs to initialize this variable before the ULP program is started. The build system makes this possible by generating the `${ULP_APP_NAME}.h` and `${ULP_APP_NAME}.ld` files which define the global symbols present in the ULP program. Each global symbol defined in the ULP program is included in these files and are prefixed with `ulp_`.

The header file contains the declaration of the symbol:

```
extern uint32_t ulp_measurement_count;
```

Note that all symbols (variables, arrays, functions) are declared as `uint32_t`. For functions and arrays, take the address of the symbol and cast it to the appropriate type.

The generated linker script file defines the locations of symbols in RTC_SLOW_MEM:

```
PROVIDE ( ulp_measurement_count = 0x50000060 );
```

To access the ULP program variables from the main program, the generated header file should be included using an `include` statement. This will allow the ULP program variables to be accessed as regular variables:

```
#include "ulp_app_name.h"

// later
void init_ulp_vars() {
    ulp_measurement_count = 64;
}
```

Note that the ULP FSM program can only use the lower 16 bits of each 32-bit word in RTC memory, because the registers are 16-bit, and there is no instruction to load from the high part of the word. Likewise, the ULP store instruction writes register values into the lower 16 bits of the 32-bit word in RTC memory. The upper 16 bits are written with a value which depends on the address of the store instruction, thus when reading variables written by the ULP coprocessor, the main application needs to mask the upper 16 bits, e.g.:

```
printf("Last measurement value: %d\n", ulp_last_measurement & UINT16_MAX);
```

4.31.5 Starting the ULP FSM Program

To run a ULP FSM program, the main application needs to load the ULP program into RTC memory using the *`ulp_load_binary()`* function, and then start it using the *`ulp_run()`* function.

Note that the `Enable Ultra Low Power (ULP) Coprocessor` option must be enabled in menuconfig to work with ULP. To select the type of ULP to be used, the `ULP Co-processor type` option must be set. To reserve memory for the ULP, the `RTC slow memory reserved for coprocessor` option must be set to a value big enough to store ULP code and data. If the application components contain multiple ULP programs, then the size of the RTC memory must be sufficient to hold the largest one.

Each ULP program is embedded into the ESP-IDF application as a binary blob. The application can reference this blob and load it in the following way (suppose ULP_APP_NAME was defined to `ulp_app_name`):

```
extern const uint8_t bin_start[] asm("_binary_ulp_app_name_bin_start");
extern const uint8_t bin_end[]   asm("_binary_ulp_app_name_bin_end");

void start_ulp_program() {
    ESP_ERROR_CHECK( ulp_load_binary(
        0 // load address, set to 0 when using default linker scripts
        bin_start,
        (bin_end - bin_start) / sizeof(uint32_t)) );
}
```

Once the program is loaded into RTC memory, the application can start it by passing the address of the entry point to the `ulp_run` function:

```
ESP_ERROR_CHECK( ulp_run(&ulp_entry - RTC_SLOW_MEM) );
```

Declaration of the entry point symbol comes from the generated header file mentioned above, `${ULP_APP_NAME}.h`. In the assembly source of the ULP FSM application, this symbol must be marked as `.global`:

```
        .global entry
entry:
        // code starts here
```

4.31.6 ESP32 ULP program flow

ESP32 ULP coprocessor is started by a timer. The timer is started once *ulp_run()* is called. The timer counts a number of RTC_SLOW_CLK ticks (by default, produced by an internal 150 kHz RC oscillator). The number of ticks is set using SENS_ULP_CP_SLEEP_CYCx_REG registers (x = 0..4). When starting the ULP for the first time, SENS_ULP_CP_SLEEP_CYC0_REG will be used to set the number of timer ticks. Later the ULP program can select another SENS_ULP_CP_SLEEP_CYCx_REG register using `sleep` instruction.

The application can set ULP timer period values (SENS_ULP_CP_SLEEP_CYCx_REG, x = 0..4) using `ulp_set_wakeup_period` function.

Once the timer counts the number of ticks set in the selected SENS_ULP_CP_SLEEP_CYCx_REG register, ULP coprocessor powers up and starts running the program from the entry point set in the call to *ulp_run()*.

The program runs until it encounters a `halt` instruction or an illegal instruction. Once the program halts the ULP coprocessor powers down and the timer is started again.

To disable the timer (effectively preventing the ULP program from running again), clear the RTC_CNTL_ULP_CP_SLP_TIMER_EN bit in the RTC_CNTL_STATE0_REG register. This can be done both from ULP code and from the main program.

4.31.7 Application Examples

- ULP FSM Coprocessor counts pulses on an IO while main CPU is in deep sleep: system/ulp_fsm/ulp.
- ULP FSM Coprocessor polls ADC in while main CPU is in deep sleep: system/ulp_fsm/ulp_adc.

4.31.8 API Reference

Header File

- components/ulp/include/ulp_common.h

Functions

esp_err_t **ulp_process_macros_and_load**(uint32_t load_addr, const *ulp_insn_t* *program, size_t *psize)

Resolve all macro references in a program and load it into RTC memory.

Parameters

- **load_addr** –address where the program should be loaded, expressed in 32-bit words
- **program** –ulp_insn_t array with the program
- **psize** –size of the program, expressed in 32-bit words

Returns

- ESP_OK on success
- ESP_ERR_NO_MEM if auxiliary temporary structure can not be allocated
- one of ESP_ERR_ULP_xxx if program is not valid or can not be loaded

esp_err_t **ulp_load_binary**(uint32_t load_addr, const uint8_t *program_binary, size_t program_size)

Load ULP program binary into RTC memory.

ULP program binary should have the following format (all values little-endian):

a. MAGIC, (value 0x00706c75, 4 bytes)
b. TEXT_OFFSET, offset of .text section from binary start (2 bytes)
c. TEXT_SIZE, size of .text section (2 bytes)
d. DATA_SIZE, size of .data section (2 bytes)
e. BSS_SIZE, size of .bss section (2 bytes)
f. (TEXT_OFFSET - 12) bytes of arbitrary data (will not be loaded into RTC memory)

g. .text section
h. .data section

Linker script in components/ulp/ld/esp32.ulp.ld produces ELF files which correspond to this format. This linker script produces binaries with load_addr == 0.

Parameters
- **load_addr** –address where the program should be loaded, expressed in 32-bit words
- **program_binary** –pointer to program binary
- **program_size** –size of the program binary

Returns
- ESP_OK on success
- ESP_ERR_INVALID_ARG if load_addr is out of range
- ESP_ERR_INVALID_SIZE if program_size doesn't match (TEXT_OFFSET + TEXT_SIZE + DATA_SIZE)
- ESP_ERR_NOT_SUPPORTED if the magic number is incorrect

esp_err_t **ulp_run**(uint32_t entry_point)

Run the program loaded into RTC memory.

Parameters **entry_point** –entry point, expressed in 32-bit words
Returns ESP_OK on success

esp_err_t **ulp_set_wakeup_period**(size_t period_index, uint32_t period_us)

Set one of ULP wakeup period values.

ULP coprocessor starts running the program when the wakeup timer counts up to a given value (called period). There are 5 period values which can be programmed into SENS_ULP_CP_SLEEP_CYCx_REG registers, x = 0..4 for ESP32, and one period value which can be programmed into RTC_CNTL_ULP_CP_TIMER_1_REG register for ESP32-S2. By default, for ESP32, wakeup timer will use the period set into SENS_ULP_CP_SLEEP_CYC0_REG, i.e. period number 0. ULP program code can use SLEEP instruction to select which of the SENS_ULP_CP_SLEEP_CYCx_REG should be used for subsequent wakeups.

However, please note that SLEEP instruction issued (from ULP program) while the system is in deep sleep mode does not have effect, and sleep cycle count 0 is used.

For ESP32-s2 the SLEEP instruction not exist. Instead a WAKE instruction will be used.

Note: The ULP FSM requires two clock cycles to wakeup before being able to run the program. Then additional 16 cycles are reserved after wakeup waiting until the 8M clock is stable. The FSM also requires two more clock cycles to go to sleep after the program execution is halted. The minimum wakeup period that may be set up for the ULP is equal to the total number of cycles spent on the above internal tasks. For a default configuration of the ULP running at 150kHz it makes about 133us.

Parameters
- **period_index** –wakeup period setting number (0 - 4)
- **period_us** –wakeup period, us

Returns
- ESP_OK on success
- ESP_ERR_INVALID_ARG if period_index is out of range

void **ulp_timer_stop**(void)

Stop the ULP timer.

Note: This will stop the ULP from waking up if halted, but will not abort any program currently executing on the ULP.

---

void **ulp_timer_resume**(void)

Resume the ULP timer.

Note: This will resume an already configured timer, but does no other configuration

Macros

ESP_ERR_ULP_BASE

Offset for ULP-related error codes

ESP_ERR_ULP_SIZE_TOO_BIG

Program doesn't fit into RTC memory reserved for the ULP

ESP_ERR_ULP_INVALID_LOAD_ADDR

Load address is outside of RTC memory reserved for the ULP

ESP_ERR_ULP_DUPLICATE_LABEL

More than one label with the same number was defined

ESP_ERR_ULP_UNDEFINED_LABEL

Branch instructions references an undefined label

ESP_ERR_ULP_BRANCH_OUT_OF_RANGE

Branch target is out of range of B instruction (try replacing with BX)

Type Definitions

typedef union *ulp_insn* **ulp_insn_t**

4.32 The ULP Coprocessor (Legacy GNU Make)

Note: Since ESP-IDF V4.0, the default build system is based on CMake. This documentation is for the legacy build system based on GNU Make. Support for this build system may be removed in future major releases.

The ULP (Ultra Low Power) coprocessor is a simple FSM (Finite State Machine) which is designed to perform measurements using the ADC, temperature sensor, and external I2C sensors, while the main processors are in deep sleep mode. The ULP coprocessor can access the RTC_SLOW_MEM memory region, and registers in RTC_CNTL, RTC_IO, and SARADC peripherals. The ULP coprocessor uses fixed-width 32-bit instructions, 32-bit memory addressing, and has 4 general-purpose 16-bit registers.

4.32.1 Installing the Toolchain

The ULP coprocessor code is written in assembly and compiled using the *binutils-esp32ulp toolchain*.

1. Download pre-built binaries of the latest toolchain release from: https://github.com/espressif/binutils-esp32ulp/releases.

2. Extract the toolchain into a directory, and add the path to the `bin/` directory of the toolchain to the `PATH` environment variable.

4.32.2 Compiling the ULP Code

To compile the ULP code as part of the component, the following steps must be taken:

1. The ULP code, written in assembly, must be added to one or more files with *.S* extension. These files must be placed into a separate directory inside the component directory, for instance *ulp/*.
2. Modify the component makefile, adding the following:

```
ULP_APP_NAME ?= ulp_$(COMPONENT_NAME)
ULP_S_SOURCES = $(COMPONENT_PATH)/ulp/ulp_source_file.S
ULP_EXP_DEP_OBJECTS := main.o
include $(IDF_PATH)/components/ulp/component_ulp_common.mk
```

   Here is each line explained:

   ULP_APP_NAME Name of the generated ULP application, without an extension. This name is used for build products of the ULP application: ELF file, map file, binary file, generated header file, and generated linker export file.

   ULP_S_SOURCES List of assembly files to be passed to the ULP assembler. These must be absolute paths, i.e. start with `$(COMPONENT_PATH)`. Consider using `$(addprefix)` function if more than one file needs to be listed. Paths are relative to component build directory, so prefixing them is not necessary.

   ULP_EXP_DEP_OBJECTS List of object files names within the component which include the generated header file. This list is needed to build the dependencies correctly and ensure that the generated header file is created before any of these files are compiled. See section below explaining the concept of generated header files for ULP applications.

   include $(IDF_PATH)/components/ulp/component_ulp_common.mk Includes common definitions of ULP build steps. Defines build targets for ULP object files, ELF file, binary file, etc.
3. Build the application as usual (e.g. `idf.py build` or `idf.py app`)

   Inside, the build system will take the following steps to build ULP program:

   1. **Run each assembly file** (`foo.S`) **through the C preprocessor.** This step generates the preprocessed assembly files (`foo.ulp.pS`) in the component build directory. This step also generates dependency files (`foo.ulp.d`).
   2. **Run the preprocessed assembly sources through the assembler.** This produces object (`foo.ulp.o`) and listing (`foo.ulp.lst`) files. Listing files are generated for debugging purposes and are not used at later stages of the build process.
   3. **Run the linker script template through the C preprocessor.** The template is located in `components/ulp/ld` directory.
   4. **Link the object files into an output ELF file** (`ulp_app_name.elf`). The Map file (`ulp_app_name.map`) generated at this stage may be useful for debugging purposes.
   5. **Dump the contents of the ELF file into a binary** (`ulp_app_name.bin`) which can then be embedded into the application.
   6. **Generate a list of global symbols** (`ulp_app_name.sym`) in the ELF file using `esp32ulp-elf-nm`.
   7. **Create an LD export script and header file** (`ulp_app_name.ld` and `ulp_app_name.h`) containing the symbols from `ulp_app_name.sym`. This is done using the `esp32ulp_mapgen.py` utility.
   8. **Add the generated binary to the list of binary files** to be embedded into the application.

4.32.3 Accessing the ULP Program Variables

Global symbols defined in the ULP program may be used inside the main program.

For example, the ULP program may define a variable `measurement_count` which will define the number of the ADC measurements the program needs to make before waking up the chip from deep sleep:

```
                        .global measurement_count
measurement_count:      .long 0

                        /* later, use measurement_count */
                        move r3, measurement_count
                        ld r3, r3, 0
```

The main program needs to initialize this variable before the ULP program is started. The build system makes this possible by generating `$(ULP_APP_NAME).h` and `$(ULP_APP_NAME).ld` files which define global symbols present in the ULP program. Each global symbol defined in the ULP program is included in these files and are prefixed with `ulp_`.

The header file contains the declaration of the symbol:

```
extern uint32_t ulp_measurement_count;
```

Note that all symbols (variables, arrays, functions) are declared as `uint32_t`. For functions and arrays, take the address of the symbol and cast it to the appropriate type.

The generated linker script file defines locations of symbols in RTC_SLOW_MEM:

```
PROVIDE ( ulp_measurement_count = 0x50000060 );
```

To access the ULP program variables from the main program, the generated header file should be included using an `include` statement. This will allow the ULP program variables to be accessed as regular variables:

```
#include "ulp_app_name.h"

// later
void init_ulp_vars() {
    ulp_measurement_count = 64;
}
```

Note that the ULP program can only use lower 16 bits of each 32-bit word in RTC memory, because the registers are 16-bit, and there is no instruction to load from the high part of the word.

Likewise, the ULP store instruction writes register value into the lower 16 bits part of the 32-bit word. The upper 16 bits are written with a value which depends on the address of the store instruction, thus when reading variables written by the ULP, the main application needs to mask the upper 16 bits, e.g.:

```
printf("Last measurement value: %d\n", ulp_last_measurement & UINT16_MAX);
```

4.32.4 Starting the ULP Program

To run a ULP program, the main application needs to load the ULP program into RTC memory using the `ulp_load_binary` function, and then start it using the `ulp_run` function.

Note that "Enable Ultra Low Power (ULP) Coprocessor" option must be enabled in menuconfig to reserve memory for the ULP. "RTC slow memory reserved for coprocessor" option must be set to a value sufficient to store ULP code and data. If the application components contain multiple ULP programs, then the size of the RTC memory must be sufficient to hold the largest one.

Each ULP program is embedded into the ESP-IDF application as a binary blob. The application can reference this blob and load it in the following way (suppose ULP_APP_NAME was defined to `ulp_app_name`):

```
extern const uint8_t bin_start[] asm("_binary_ulp_app_name_bin_start");
extern const uint8_t bin_end[]   asm("_binary_ulp_app_name_bin_end");

void start_ulp_program() {
    ESP_ERROR_CHECK( ulp_load_binary(
```

(continues on next page)

(continued from previous page)

```
        0 /* load address, set to 0 when using default linker scripts */,
        bin_start,
        (bin_end - bin_start) / sizeof(uint32_t)) );
}
```

esp_err_t **ulp_load_binary**(uint32_t load_addr, const uint8_t *program_binary, size_t program_size)

Load ULP program binary into RTC memory.

ULP program binary should have the following format (all values little-endian):

a. MAGIC, (value 0x00706c75, 4 bytes)
b. TEXT_OFFSET, offset of .text section from binary start (2 bytes)
c. TEXT_SIZE, size of .text section (2 bytes)
d. DATA_SIZE, size of .data section (2 bytes)
e. BSS_SIZE, size of .bss section (2 bytes)
f. (TEXT_OFFSET - 12) bytes of arbitrary data (will not be loaded into RTC memory)
g. .text section
h. .data section

Linker script in components/ulp/ld/esp32.ulp.ld produces ELF files which correspond to this format. This linker script produces binaries with load_addr == 0.

Parameters

- **load_addr** –address where the program should be loaded, expressed in 32-bit words
- **program_binary** –pointer to program binary
- **program_size** –size of the program binary

Returns

- ESP_OK on success
- ESP_ERR_INVALID_ARG if load_addr is out of range
- ESP_ERR_INVALID_SIZE if program_size doesn't match (TEXT_OFFSET + TEXT_SIZE + DATA_SIZE)
- ESP_ERR_NOT_SUPPORTED if the magic number is incorrect

Once the program is loaded into RTC memory, the application can start it, passing the address of the entry point to the `ulp_run` function:

```
ESP_ERROR_CHECK( ulp_run(&ulp_entry - RTC_SLOW_MEM) );
```

esp_err_t **ulp_run**(uint32_t entry_point)

Run the program loaded into RTC memory.

Parameters **entry_point** –entry point, expressed in 32-bit words
Returns ESP_OK on success

Declaration of the entry point symbol comes from the generated header file mentioned above, `$(ULP_APP_NAME).h`. In the assembly source of the ULP application, this symbol must be marked as `.global`:

```
        .global entry
entry:
        /* code starts here */
```

4.32.5 ULP Program Flow

The ULP coprocessor is started by a timer. The timer is started once `ulp_run` is called. The timer counts the number of RTC_SLOW_CLK ticks (by default, produced by an internal 150 kHz RC oscillator). The number of ticks is set using `SENS_ULP_CP_SLEEP_CYCx_REG` registers (x = 0..4). When starting the ULP for the first

time, SENS_ULP_CP_SLEEP_CYC0_REG will be used to set the number of timer ticks. Later the ULP program can select another SENS_ULP_CP_SLEEP_CYCx_REG register using the sleep instruction.

The application can set ULP timer period values (SENS_ULP_CP_SLEEP_CYCx_REG, x = 0..4) using the ulp_set_wakeup_period function.

esp_err_t **ulp_set_wakeup_period**(size_t period_index, uint32_t period_us)

Set one of ULP wakeup period values.

ULP coprocessor starts running the program when the wakeup timer counts up to a given value (called period). There are 5 period values which can be programmed into SENS_ULP_CP_SLEEP_CYCx_REG registers, x = 0..4 for ESP32, and one period value which can be programmed into RTC_CNTL_ULP_CP_TIMER_1_REG register for ESP32-S2. By default, for ESP32, wakeup timer will use the period set into SENS_ULP_CP_SLEEP_CYC0_REG, i.e. period number 0. ULP program code can use SLEEP instruction to select which of the SENS_ULP_CP_SLEEP_CYCx_REG should be used for subsequent wakeups.

However, please note that SLEEP instruction issued (from ULP program) while the system is in deep sleep mode does not have effect, and sleep cycle count 0 is used.

For ESP32-s2 the SLEEP instruction not exist. Instead a WAKE instruction will be used.

Note: The ULP FSM requires two clock cycles to wakeup before being able to run the program. Then additional 16 cycles are reserved after wakeup waiting until the 8M clock is stable. The FSM also requires two more clock cycles to go to sleep after the program execution is halted. The minimum wakeup period that may be set up for the ULP is equal to the total number of cycles spent on the above internal tasks. For a default configuration of the ULP running at 150kHz it makes about 133us.

Parameters

- **period_index** –wakeup period setting number (0 - 4)
- **period_us** –wakeup period, us

Returns

- ESP_OK on success
- ESP_ERR_INVALID_ARG if period_index is out of range

Once the timer counts the number of ticks set in the selected SENS_ULP_CP_SLEEP_CYCx_REG register, the ULP coprocessor will power up and start running the program from the entry point set in the call to ulp_run.

The program runs until it encounters a halt instruction or an illegal instruction. Once the program halts, ULP coprocessor will power down, and the timer will be started again.

To disable the timer (effectively preventing the ULP program from running again), please clear the RTC_CNTL_ULP_CP_SLP_TIMER_EN bit in the RTC_CNTL_STATE0_REG register. This can be done both from the ULP code and from the main program.

4.33 Unit Testing in ESP32

ESP-IDF provides the following methods to test software.

- Target based tests using a central unit test application which runs on the esp32. These tests use the *Unity <https://www.throwtheswitch.org/unity>* unit test framework. They can be integrated into an ESP-IDF component by placing them in the component's test subdirectory. For the most part, this document is about target based tests.
- Linux-host based unit tests in which all the hardware is abstracted via mocks. Linux-host based tests are still under development and only a small fraction of IDF components support them, currently. They are covered here: *target based unit testing*.

4.33.1 Normal Test Cases

Unit tests are located in the `test` subdirectory of a component. Tests are written in C, and a single C source file can contain multiple test cases. Test files start with the word "test".

Each test file should include the `unity.h` header and the header for the C module to be tested.

Tests are added in a function in the C file as follows:

```
TEST_CASE("test name", "[module name]"
{
        // Add test here
}
```

- The first argument is a descriptive name for the test.
- The second argument is an identifier in square brackets. Identifiers are used to group related test, or tests with specific properties.

Note: There is no need to add a main function with `UNITY_BEGIN()` and `UNITY_END()` in each test case. `unity_platform.c` will run `UNITY_BEGIN()` autonomously, and run the test cases, then call `UNITY_END()`.

The `test` subdirectory should contain a *component CMakeLists.txt*, since they are themselves components (i.e., a test component). ESP-IDF uses the Unity test framework located in the `unity` component. Thus, each test component should specify the `unity` component as a component requirement using the `REQUIRES` argument. Normally, components *should list their sources manually*; for component tests however, this requirement is relaxed and the use of the `SRC_DIRS` argument in `idf_component_register` is advised.

Overall, the minimal `test` subdirectory `CMakeLists.txt` file should contain the following:

```
idf_component_register(SRC_DIRS "."
                       INCLUDE_DIRS "."
                       REQUIRES unity)
```

See http://www.throwtheswitch.org/unity for more information about writing tests in Unity.

4.33.2 Multi-device Test Cases

The normal test cases will be executed on one DUT (Device Under Test). However, components that require some form of communication (e.g., GPIO, SPI) require another device to communicate with, thus cannot be tested normal test cases. Multi-device test cases involve writing multiple test functions, and running them on multiple DUTs.

The following is an example of a multi-device test case:

```
void gpio_master_test()
{
    gpio_config_t slave_config = {
            .pin_bit_mask = 1 << MASTER_GPIO_PIN,
            .mode = GPIO_MODE_INPUT,
    };
    gpio_config(&slave_config);
    unity_wait_for_signal("output high level");
    TEST_ASSERT(gpio_get_level(MASTER_GPIO_PIN) == 1);
}

void gpio_slave_test()
{
    gpio_config_t master_config = {
            .pin_bit_mask = 1 << SLAVE_GPIO_PIN,
            .mode = GPIO_MODE_OUTPUT,
```

(continues on next page)

(continued from previous page)

```
    };
    gpio_config(&master_config);
    gpio_set_level(SLAVE_GPIO_PIN, 1);
    unity_send_signal("output high level");
}

TEST_CASE_MULTIPLE_DEVICES("gpio multiple devices test example", "[driver]", gpio_
↪master_test, gpio_slave_test);
```

The macro `TEST_CASE_MULTIPLE_DEVICES` is used to declare a multi-device test case.

- The first argument is test case name.
- The second argument is test case description.
- From the third argument, up to 5 test functions can be defined, each function will be the entry point of tests running on each DUT.

Running test cases from different DUTs could require synchronizing between DUTs. We provide `unity_wait_for_signal` and `unity_send_signal` to support synchronizing with UART. As the scenario in the above example, the slave should get GPIO level after master set level. DUT UART console will prompt and user interaction is required:

DUT1 (master) console:

```
Waiting for signal: [output high level]!
Please press "Enter" key to once any board send this signal.
```

DUT2 (slave) console:

```
Send signal: [output high level]!
```

Once the signal is sent from DUT2, you need to press "Enter" on DUT1, then DUT1 unblocks from `unity_wait_for_signal` and starts to change GPIO level.

4.33.3 Multi-stage Test Cases

The normal test cases are expected to finish without reset (or only need to check if reset happens). Sometimes we expect to run some specific tests after certain kinds of reset. For example, we want to test if the reset reason is correct after a wake up from deep sleep. We need to create a deep-sleep reset first and then check the reset reason. To support this, we can define multi-stage test cases, to group a set of test functions:

```
static void trigger_deepsleep(void)
{
    esp_sleep_enable_timer_wakeup(2000);
    esp_deep_sleep_start();
}

void check_deepsleep_reset_reason()
{
    soc_reset_reason_t reason = esp_rom_get_reset_reason(0);
    TEST_ASSERT(reason == RESET_REASON_CORE_DEEP_SLEEP);
}

TEST_CASE_MULTIPLE_STAGES("reset reason check for deepsleep", "[esp32]", trigger_
↪deepsleep, check_deepsleep_reset_reason);
```

Multi-stage test cases present a group of test functions to users. It needs user interactions (select cases and select different stages) to run the case.

4.33.4 Tests For Different Targets

Some tests (especially those related to hardware) cannot run on all targets. Below is a guide how to make your unit tests run on only specified targets.

1. Wrap your test code by `!(TEMPORARY_)DISABLED_FOR_TARGETS()` macros and place them either in the original test file, or separate the code into files grouped by functions, but make sure all these files will be processed by the compiler. E.g.:

```
#if !TEMPORARY_DISABLED_FOR_TARGETS(ESP32, ESP8266)
TEST_CASE("a test that is not ready for esp32 and esp8266 yet", "[]")
{
}
#endif //!TEMPORARY_DISABLED_FOR_TARGETS(ESP32, ESP8266)
```

Once you need one of the tests to be compiled on a specified target, just modify the targets in the disabled list. It's more encouraged to use some general conception that can be described in `soc_caps.h` to control the disabling of tests. If this is done but some of the tests are not ready yet, use both of them (and remove `!(TEMPORARY_)DISABLED_FOR_TARGETS()` later). E.g.:

```
#if SOC_SDIO_SLAVE_SUPPORTED
#if !TEMPORARY_DISABLED_FOR_TARGETS(ESP64)
TEST_CASE("a sdio slave tests that is not ready for esp64 yet", "[sdio_slave]")
{
    //available for esp32 now, and will be available for esp64 in the future
}
#endif //!TEMPORARY_DISABLED_FOR_TARGETS(ESP64)
#endif //SOC_SDIO_SLAVE_SUPPORTED
```

2. For test code that you are 100% for sure that will not be supported (e.g. no peripheral at all), use `DISABLED_FOR_TARGETS`; for test code that should be disabled temporarily, or due to lack of runners, etc., use `TEMPORARY_DISABLED_FOR_TARGETS`.

Some old ways of disabling unit tests for targets, that have obvious disadvantages, are deprecated:

- DON'T put the test code under `test/target` folder and use CMakeLists.txt to choose one of the target folder. This is prevented because test code is more likely to be reused than the implementations. If you put something into `test/esp32` just to avoid building it on esp32s2, it's hard to make the code tidy if you want to enable the test again on esp32s3.
- DON'T use `CONFIG_IDF_TARGET_xxx` macros to disable the test items any more. This makes it harder to track disabled tests and enable them again. Also, a black-list style `#if !disabled` is preferred to white-list style `#if CONFIG_IDF_TARGET_xxx`, since you will not silently disable cases when new targets are added in the future. But for test implementations, it's allowed to use `#if CONFIG_IDF_TARGET_xxx` to pick one of the implementation code.
  - Test item: some items that will be performed on some targets, but skipped on other targets. E.g.
    There are three test items SD 1-bit, SD 4-bit and SDSPI. For ESP32-S2, which doesn't have SD host, among the tests only SDSPI is enabled on ESP32-S2.
  - Test implementation: some code will always happen, but in different ways. E.g.
    There is no SDIO PKT_LEN register on ESP8266. If you want to get the length from the slave as a step in the test process, you can have different implementation code protected by `#if CONFIG_IDF_TARGET_` reading in different ways.
    But please avoid using `#else` macro. When new target is added, the test case will fail at building stage, so that the maintainer will be aware of this, and choose one of the implementations explicitly.

4.33.5 Building Unit Test App

Follow the setup instructions in the top-level esp-idf README. Make sure that `IDF_PATH` environment variable is set to point to the path of esp-idf top-level directory.

Change into `tools/unit-test-app` directory to configure and build it:

- `idf.py menuconfig` - configure unit test app.
- `idf.py -T all build` - build unit test app with tests for each component having tests in the `test` subdirectory.
- `idf.py -T "xxx yyy" build` - build unit test app with tests for some space-separated specific components (For instance: `idf.py -T heap build` - build unit tests only for `heap` component directory).
- `idf.py -T all -E "xxx yyy" build` - build unit test app with all unit tests, except for unit tests of some components (For instance: `idf.py -T all -E "ulp mbedtls" build` - build all unit tests excludes `ulp` and `mbedtls` components).

Note: Due to inherent limitations of Windows command prompt, following syntax has to be used in order to build unit-test-app with multiple components: `idf.py -T xxx -T yyy build` or with escaped quotes: `idf.py -T \`"xxx yyy\`" build` in PowerShell or `idf.py -T \^"ssd1306 hts221\^" build` in Windows command prompt.

When the build finishes, it will print instructions for flashing the chip. You can simply run `idf.py flash` to flash all build output.

You can also run `idf.py -T all flash` or `idf.py -T xxx flash` to build and flash. Everything needed will be rebuilt automatically before flashing.

Use menuconfig to set the serial port for flashing.

4.33.6 Running Unit Tests

After flashing reset the ESP32 and it will boot the unit test app.

When unit test app is idle, press "Enter" will make it print test menu with all available tests:

```
Here's the test menu, pick your combo:
(1)     "esp_ota_begin() verifies arguments" [ota]
(2)     "esp_ota_get_next_update_partition logic" [ota]
(3)     "Verify bootloader image in flash" [bootloader_support]
(4)     "Verify unit test app image" [bootloader_support]
(5)     "can use new and delete" [cxx]
(6)     "can call virtual functions" [cxx]
(7)     "can use static initializers for non-POD types" [cxx]
(8)     "can use std::vector" [cxx]
(9)     "static initialization guards work as expected" [cxx]
(10)    "global initializers run in the correct order" [cxx]
(11)    "before scheduler has started, static initializers work correctly" [cxx]
(12)    "adc2 work with wifi" [adc]
(13)    "gpio master/slave test example" [ignore][misc][test_env=UT_T2_1][multi_
↪device]
        (1)     "gpio_master_test"
        (2)     "gpio_slave_test"
(14)    "SPI Master clockdiv calculation routines" [spi]
(15)    "SPI Master test" [spi][ignore]
(16)    "SPI Master test, interaction of multiple devs" [spi][ignore]
(17)    "SPI Master no response when switch from host1 (SPI2) to host2 (SPI3)"␣
↪[spi]
(18)    "SPI Master DMA test, TX and RX in different regions" [spi]
(19)    "SPI Master DMA test: length, start, not aligned" [spi]
(20)    "reset reason check for deepsleep" [esp32][test_env=UT_T2_1][multi_stage]
        (1)     "trigger_deepsleep"
        (2)     "check_deepsleep_reset_reason"
```

The normal case will print the case name and description. Master-slave cases will also print the sub-menu (the registered test function names).

Test cases can be run by inputting one of the following:

- Test case name in quotation marks to run a single test case
- Test case index to run a single test case
- Module name in square brackets to run all test cases for a specific module
- An asterisk to run all test cases

`[multi_device]` and `[multi_stage]` tags tell the test runner whether a test case is a multiple devices or multiple stages of test case. These tags are automatically added by `TEST_CASE_MULTIPLE_STAGES and `TEST_CASE_MULTIPLE_DEVICES` macros.

After you select a multi-device test case, it will print sub-menu:

```
Running gpio master/slave test example...
gpio master/slave test example
        (1)     "gpio_master_test"
        (2)     "gpio_slave_test"
```

You need to input a number to select the test running on the DUT.

Similar to multi-device test cases, multi-stage test cases will also print sub-menu:

```
Running reset reason check for deepsleep...
reset reason check for deepsleep
        (1)     "trigger_deepsleep"
        (2)     "check_deepsleep_reset_reason"
```

First time you execute this case, input `1` to run first stage (trigger deepsleep). After DUT is rebooted and able to run test cases, select this case again and input `2` to run the second stage. The case only passes if the last stage passes and all previous stages trigger reset.

4.33.7 Timing Code with Cache Compensated Timer

Instructions and data stored in external memory (e.g. SPI Flash and SPI RAM) are accessed through the CPU's unified instruction and data cache. When code or data is in cache, access is very fast (i.e., a cache hit).

However, if the instruction or data is not in cache, it needs to be fetched from external memory (i.e., a cache miss). Access to external memory is significantly slower, as the CPU must execute stall cycles whilst waiting for the instruction or data to be retrieved from external memory. This can cause the overall code execution speed to vary depending on the number of cache hits or misses.

Code and data placements can vary between builds, and some arrangements may be more favorable with regards to cache access (i.e., minimizing cache misses). This can technically affect execution speed, however these factors are usually irrelevant as their effect 'average out' over the device's operation.

The effect of the cache on execution speed, however, can be relevant in benchmarking scenarios (especially micro benchmarks). There might be some variability in measured time between runs and between different builds. A technique for eliminating for some of the variability is to place code and data in instruction or data RAM (IRAM/DRAM), respectively. The CPU can access IRAM and DRAM directly, eliminating the cache out of the equation. However, this might not always be viable as the size of IRAM and DRAM is limited.

The cache compensated timer is an alternative to placing the code/data to be benchmarked in IRAM/DRAM. This timer uses the processor's internal event counters in order to determine the amount of time spent on waiting for code/data in case of a cache miss, then subtract that from the recorded wall time.

```
// Start the timer
ccomp_timer_start();

// Function to time
func_code_to_time();

// Stop the timer, and return the elapsed time in microseconds relative to
// ccomp_timer_start
int64_t t = ccomp_timer_stop();
```

One limitation of the cache compensated timer is that the task that benchmarked functions should be pinned to a core. This is due to each core having its own event counters that are independent of each other. For example, if `ccomp_timer_start` gets called on one core, put to sleep by the scheduler, wakes up, and gets rescheduled on the other core, then the corresponding `ccomp_timer_stop` will be invalid.

4.33.8 Mocks

Note: Currently, mocking is only possible with some selected components when running on the Linux host. In the future, we plan to make essential components in IDF mockable. This will also include mocking when running on the ESP32.

One of the biggest problems regarding unit testing of embedded systems are the strong hardware dependencies. Running unit tests directly on the ESP32 can be especially difficult for higher layer components for the following reasons:

- Decreased test reliability due to lower layer components and/or hardware setup.
- Increased difficulty in testing edge cases due to limitations of lower layer components and/or hardware setup
- Increased difficulty in identifying the root cause due to the large number of dependencies influencing the behavior

When testing a particular component, (i.e., the component under test), software mocking allows the dependencies of the component under test to be substituted (i.e., mocked) entirely in software. To allow software mocking, ESP-IDF integrates the CMock mocking framework as a component. With the addition of some CMake functions in the ESP-IDF's build system, it is possible to conveniently mock the entirety (or a part of) an IDF component.

Ideally, all components that the component under test is dependent on should be mocked, thus allowing the test environment complete control over all interactions with the component under test. However, if mocking all dependent components becomes too complex or too tedious (e.g. because you need to mock too many function calls) you have the following options:

- Include more "real" IDF code in the tests. This may work but increases the dependency on the "real" code's behavior. Furthermore, once a test fails, you may not know if the failure is in your actual code under tests or the "real" IDF code.
- Re-evaluate the design of the code under test and attempt to reduce its dependencies by dividing the code under test into more manageable components. This may seem burdensome but it is common knowledge that unit tests often expose software design weaknesses. Fixing design weaknesses will not only help with unit testing in the short term, but will help future code maintenance as well.

Refer to cmock/CMock/docs/CMock_Summary.md for more details on how CMock works and how to create and use mocks.

Requirements

The following requirements are necessary to generate the mocks:

- Installed ESP-IDF with all its requirements
- `ruby`
- On the Linux target, which is the only target where mocking currently works, `libbsd` is required, too

Mock a Component

To create a mock version of a component, called a *component mock*, the component needs to be overwritten in a particular way. Overriding a component entails creating a component with the exact same name as the original

component, then let the build system discover it later than the original component (see *Multiple components with the same name <cmake-components-same-name>* for more details).

In the component mock, the following parts are specified:

- The headers providing the functions to generate mocks for
- Include paths of the aforementioned headers
- Dependencies of the mock component (this is necessary e.g. if the headers include files from other components)

All these parts have to be specified using the IDF build system function `idf_component_mock`. You can use the IDF build system function `idf_component_get_property` with the tag `COMPONENT_OVERRIDEN_DIR` to access the component directory of the original component and then register the mock component parts using `idf_component_mock`:

```
idf_component_get_property(original_component_dir <original-component-name>␣
↪COMPONENT_OVERRIDEN_DIR)
...
idf_component_mock(INCLUDE_DIRS "${original_component_dir}/include"
    REQUIRES freertos
    MOCK_HEADER_FILES ${original_component_dir}/include/header_containing_
↪functions_to_mock.h)
```

The component mock also requires a separate `mock` directory containing a `mock_config.yaml` file that configures CMock. A simple `mock_config.yaml` could look like this:

```
:cmock:
  :plugins:
    - expect
    - expect_any_args
```

For more details about the CMock configuration yaml file, have a look at cmock/CMock/docs/CMock_Summary.md.

Note that the component mock does not have to mock the original component in its entirety. As long as the test project's dependencies and dependencies of other code to the original components are satisfied by the component mock, partial mocking is adequate. In fact, most of the component mocks in IDF in `tools/mocks` are only partially mocking the original component.

Examples of component mocks can be found under tools/mocks in the IDF directory. General information on how to *override an IDF component* can be found under the section "Multiple components with the same name" in the *IDF build system documentation*`.

Adjustments in Unit Test

The unit test needs to inform the cmake build system to mock dependent components (i.e., it needs to override the original component with the mock component). This is done by either placing the component mock into the project's `components` directory or adding the mock component's directory using the following line in the project's root `CMakeLists.txt`:

```
list(APPEND EXTRA_COMPONENT_DIRS "<mock_component_dir>")
```

Both methods will override existing components in ESP-IDF with the component mock. The latter is particularly convenient if you use component mocks that are already supplied by IDF.

Users should refer to the `esp_event` host-based unit test and its esp_event/host_test/esp_event_unit_test/CMakeLists.txt as an example of a component mock.

4.34 Unit Testing on Linux

Note: Host testing with IDF is experimental for now. We try our best to keep interfaces stable but can't guarantee it for now. Feedback via github or the forum on esp32.com is highly welcome, though and may influence the future design of the host-based tests.

This article provides an overview of unit tests with IDF on Linux. For using unit tests on the target, please refer to *target based unit testing*.

4.34.1 Embedded Software Tests

Embedded software tests are challenging due to the following factors:

- Difficulties running tests efficiently.
- Lack of many operating system abstractions when interfacing with hardware, making it difficult to isolate code under test.

To solve these two problems, Linux host-based tests with CMock are introduced. Linux host-based tests are more efficient than unit tests on the target since they:

- Compile the necessary code only
- Don't need time to upload to a target
- Run much faster on a host-computer, compared to an ESP

Using the CMock framework also solves the problem of hardware dependencies. Through mocking, hardware details are emulated and specified at run time, but only if necessary.

Of course, using code on the host and using mocks does not fully represent the target device. Thus, two kinds of tests are recommended:

1. Unit tests which test program logic on a Linux machine, isolated through mocks.
2. System/Integration tests which test the interaction of components and the whole system. They run on the target, where irrelevant components and code may as well be emulated via mocks.

This documentation is about the first kind of tests. Refer to *target based unit testing* for more information on target tests (the second kind of tests).

4.34.2 IDF Unit Tests on Linux Host

The current focus of the Linux host tests is on creating isolated unit tests of components, while mocking the component's dependencies with CMock.

A complete implementation of IDF to run on Linux does not exist currently.

There are currently two examples for running IDF-built code on Linux host:

- An example hello-world application
- A unit test for NVS .

Inside the component which should be tested, there is a separate directory `host_test`, besides the "traditional" `test` directory or the `test_apps` directory. It has one or more subdirectories:

```
- host_test/

            - fixtures/
                contains test fixtures (structs/functions to do test case set-up␣
↪and tear-down).
                If there are no fixtures, this can be ommitted.
            - <test_name>/
                IDF applications which run the tests
```

(continues on next page)

(continued from previous page)

```
            - <test_name2>/
                Further tests are possible.
```

The IDF applications inside `host_test` set the mocking configuration as described in the *IDF unit test documentation*.

The NVS page unit test provides some illustration of how to control the mocks.

Requirements

- Installed IDF including all IDF requirements
- CMock requirements (`Ruby`)
- `libbsd`

The host tests have been tested on Ubuntu 20.04 with `GCC` version 9 and 10.

4.35 Unit Testing (Legacy GNU Make)

Note: Since ESP-IDF V4.0, the default build system is based on CMake. This documentation is for the legacy build system based on GNU Make. Support for this build system may be removed in future major releases.

ESP-IDF comes with a unit test application that is based on the Unity - unit test framework. Unit tests are integrated in the ESP-IDF repository and are placed in the `test` subdirectories of each component respectively.

4.35.1 Normal Test Cases

Unit tests are located in the `test` subdirectory of a component. Tests are added in C files, a single C file can include multiple test cases. Test files start with the word "test".

Each test file should include the `unity.h` header and the header for the C module to be tested.

Tests are added in a function in the C file as follows:

```
TEST_CASE("test name", "[module name]"
{
        // Add test here
}
```

The first argument is a descriptive name for the test, the second argument is an identifier in square brackets. Identifiers are used to group related test, or tests with specific properties.

Note: There is no need to add a main function with `UNITY_BEGIN()` and `UNITY_END()` in each test case. `unity_platform.c` will run `UNITY_BEGIN()` autonomously, and run the test cases, then call `UNITY_END()`.

Each `test` subdirectory needs to include a `component.mk` file with the following line of code:

```
COMPONENT_ADD_LDFLAGS = -Wl,--whole-archive -l$(COMPONENT_NAME) -Wl,--no-whole-
↪archive
```

See http://www.throwtheswitch.org/unity for more information about writing tests in Unity.

4.35.2 Multi-device Test Cases

The normal test cases will be executed on one DUT (Device Under Test). However, components that require some form of communication (e.g., GPIO, SPI) require another device to communicate with, thus cannot be tested normal test cases. Multi-device test cases involve writing multiple test functions, and running them on multiple DUTs.

The following is an example of a Multi-device test case:

```
void gpio_master_test()
{
    gpio_config_t slave_config = {
            .pin_bit_mask = 1 << MASTER_GPIO_PIN,
            .mode = GPIO_MODE_INPUT,
    };
    gpio_config(&slave_config);
    unity_wait_for_signal("output high level");
    TEST_ASSERT(gpio_get_level(MASTER_GPIO_PIN) == 1);
}

void gpio_slave_test()
{
    gpio_config_t master_config = {
            .pin_bit_mask = 1 << SLAVE_GPIO_PIN,
            .mode = GPIO_MODE_OUTPUT,
    };
    gpio_config(&master_config);
    gpio_set_level(SLAVE_GPIO_PIN, 1);
    unity_send_signal("output high level");
}

TEST_CASE_MULTIPLE_DEVICES("gpio multiple devices test example", "[driver]", gpio_
↪master_test, gpio_slave_test);
```

The macro `TEST_CASE_MULTIPLE_DEVICES` is used to declare a multi-device test case. The first argument is test case name, the second argument is test case description. From the third argument, up to 5 test functions can be defined, each function will be the entry point of tests running on each DUT.

Running test cases from different DUTs could require synchronizing between DUTs. We provide `unity_wait_for_signal` and `unity_send_signal` to support synchronizing with UART. As the scenario in the above example, the slave should get GPIO level after master set level. DUT UART console will prompt and requires user interaction:

DUT1 (master) console:

```
Waiting for signal: [output high level]!
Please press "Enter" key once any board send this signal.
```

DUT2 (slave) console:

```
Send signal: [output high level]!
```

Once the signal is sent from DUT2, you need to press "Enter" on DUT1, then DUT1 unblocks from `unity_wait_for_signal` and starts to change GPIO level.

Signals can also be used to pass parameters between multiple devices. For example, DUT1 want to know the MAC address of DUT2, so it can connect to DUT2. In this case, `unity_wait_for_signal_param` and `unity_send_signal_param` can be used:

DUT1 console:

```
Waiting for signal: [dut2 mac address]!
Please input parameter value from any board send this signal and press "Enter" key.
```

DUT2 console:

```
Send signal: [dut2 mac address][10:20:30:40:50:60]!
```

Once the signal is sent from DUT2, you need to input `10:20:30:40:50:60` on DUT1 and press "Enter". Then DUT1 will get the MAC address string of DUT2 and unblock from `unity_wait_for_signal_param`, then start to connect to DUT2.

4.35.3 Multi-stage Test Cases

The normal test cases are expected to finish without reset (or only need to check if reset happens). Sometimes we expect to run some specific tests after certain kinds of reset. For example, we expect to test if reset reason is correct after a wakeup from deep sleep. We need to create a deep-sleep reset first and then check the reset reason. To support this, we can define multi-stage test cases, to group a set of test functions:

```
static void trigger_deepsleep(void)
{
    esp_sleep_enable_timer_wakeup(2000);
    esp_deep_sleep_start();
}

void check_deepsleep_reset_reason()
{
    soc_reset_reason_t reason = esp_rom_get_reset_reason(0);
    TEST_ASSERT(reason == RESET_REASON_CORE_DEEP_SLEEP);
}

TEST_CASE_MULTIPLE_STAGES("reset reason check for deepsleep", "[esp32]", trigger_
↪deepsleep, check_deepsleep_reset_reason);
```

Multi-stage test cases present a group of test functions to users. It need user interactions (select cases and select different stages) to run the case.

4.35.4 Building Unit Test App

Follow the setup instructions in the top-level esp-idf README. Make sure that `IDF_PATH` environment variable is set to point to the path of esp-idf top-level directory.

Change into `tools/unit-test-app` directory to configure and build it:

- `make menuconfig` - configure unit test app.
- `make TESTS_ALL=1` - build unit test app with tests for each component having tests in the `test` subdirectory.
- `make TEST_COMPONENTS='xxx'` - build unit test app with tests for specific components.
- `make TESTS_ALL=1 TEST_EXCLUDE_COMPONENTS='xxx'` - build unit test app with all unit tests, except for unit tests of some components. (For instance: `make TESTS_ALL=1 TEST_EXCLUDE_COMPONENTS='ulp mbedtls'` - build all unit tests exludes `ulp` and `mbedtls` components).

When the build finishes, it will print instructions for flashing the chip. You can simply run `make flash` to flash all build output.

You can also run `make flash TESTS_ALL=1` or `make TEST_COMPONENTS='xxx'` to build and flash. Everything needed will be rebuilt automatically before flashing.

Use menuconfig to set the serial port for flashing.

4.35.5 Running Unit Tests

After flashing reset the ESP32 and it will boot the unit test app.

When unit test app is idle, press "Enter" will make it print test menu with all available tests:

```
Here's the test menu, pick your combo:
(1)     "esp_ota_begin() verifies arguments" [ota]
(2)     "esp_ota_get_next_update_partition logic" [ota]
(3)     "Verify bootloader image in flash" [bootloader_support]
(4)     "Verify unit test app image" [bootloader_support]
(5)     "can use new and delete" [cxx]
(6)     "can call virtual functions" [cxx]
(7)     "can use static initializers for non-POD types" [cxx]
(8)     "can use std::vector" [cxx]
(9)     "static initialization guards work as expected" [cxx]
(10)    "global initializers run in the correct order" [cxx]
(11)    "before scheduler has started, static initializers work correctly" [cxx]
(12)    "adc2 work with wifi" [adc]
(13)    "gpio master/slave test example" [ignore][misc][test_env=UT_T2_1][multi_
↪device]
        (1)     "gpio_master_test"
        (2)     "gpio_slave_test"
(14)    "SPI Master clockdiv calculation routines" [spi]
(15)    "SPI Master test" [spi][ignore]
(16)    "SPI Master test, interaction of multiple devs" [spi][ignore]
(17)    "SPI Master no response when switch from host1 (SPI2) to host2 (SPI3)"␣
↪[spi]
(18)    "SPI Master DMA test, TX and RX in different regions" [spi]
(19)    "SPI Master DMA test: length, start, not aligned" [spi]
(20)    "reset reason check for deepsleep" [esp32][test_env=UT_T2_1][multi_stage]
        (1)     "trigger_deepsleep"
        (2)     "check_deepsleep_reset_reason"
```

The normal case will print the case name and description. Master-slave cases will also print the sub-menu (the registered test function names).

Test cases can be run by inputting one of the following:

- Test case name in quotation marks (for example, `"esp_ota_begin() verifies arguments"`) to run a single test case.
- Test case index (for example, `1`) to run a single test case.
- Module name in square brackets (for example, `[cxx]`) to run all test cases for a specific module.
- An asterisk (`*`) to run all test cases

`[multi_device]` and `[multi_stage]` tags tell the test runner whether a test case is a multi-device or multi-stage test case. These tags are automatically added by `` `TEST_CASE_MULTIPLE_STAGES `` and `TEST_CASE_MULTIPLE_DEVICES` macros.

After you select a multi-device test case, it will print sub menu:

```
Running gpio master/slave test example...
gpio master/slave test example
        (1)     "gpio_master_test"
        (2)     "gpio_slave_test"
```

You need to input a number to select the test running on the DUT.

Similar to multi-device test cases, multi-stage test cases will also print sub-menu:

```
Running reset reason check for deepsleep...
reset reason check for deepsleep
        (1)     "trigger_deepsleep"
        (2)     "check_deepsleep_reset_reason"
```

For the first time you execute this case, please input `1` to run the first stage (trigger deep-sleep). After DUT is rebooted and test cases are available to run, select this case again and input `2` to run the second stage. The case will only pass if the last stage passes and all previous stages trigger reset.

4.36 Wi-Fi Driver

4.36.1 ESP32 Wi-Fi Feature List

- Support 4 virtual WiFi interfaces, which are STA, AP, Sniffer and reserved.
- Support station-only mode, AP-only mode, station/AP-coexistence mode
- Support IEEE 802.11b, IEEE 802.11g, IEEE 802.11n, and APIs to configure the protocol mode
- Support WPA/WPA2/WPA3/WPA2-Enterprise and WPS
- Support AMPDU, HT40, QoS and other key features
- Support Modem-sleep
- Support the Espressif-specific ESP-NOW protocol and Long Range mode, which supports up to **1 km** of data traffic
- Up to 20 MBit/s TCP throughput and 30 MBit/s UDP throughput over the air
- Support Sniffer
- Support both fast scan and all-channel scan
- Support multiple antennas
- Support channel state information

4.36.2 How To Write a Wi-Fi Application

Preparation

Generally, the most effective way to begin your own Wi-Fi application is to select an example which is similar to your own application, and port the useful part into your project. It is not a MUST but it is strongly recommended that you take some time to read this article first, especially if you want to program a robust Wi-Fi application. This article is supplementary to the Wi-Fi APIs/Examples. It describes the principles of using the Wi-Fi APIs, the limitations of the current Wi-Fi API implementation, and the most common pitfalls in using Wi-Fi. This article also reveals some design details of the Wi-Fi driver. We recommend you to select an example .

Setting Wi-Fi Compile-time Options

Refer to *Wi-Fi Menuconfig*.

Init Wi-Fi

Refer to *ESP32 Wi-Fi Station General Scenario*, *ESP32 Wi-Fi AP General Scenario*.

Start/Connect Wi-Fi

Refer to *ESP32 Wi-Fi Station General Scenario*, *ESP32 Wi-Fi AP General Scenario*.

Event-Handling

Generally, it is easy to write code in "sunny-day" scenarios, such as *WIFI_EVENT_STA_START*, *WIFI_EVENT_STA_CONNECTED* etc. The hard part is to write routines in "rainy-day" scenarios, such as *WIFI_EVENT_STA_DISCONNECTED* etc. Good handling of "rainy-day" scenarios is fundamental to robust Wi-Fi applications. Refer to *ESP32 Wi-Fi Event Description*, *ESP32 Wi-Fi Station General Scenario*, *ESP32 Wi-Fi AP General Scenario*. See also *an overview of event handling in ESP-IDF*.

Write Error-Recovery Routines Correctly at All Times

Just like the handling of "rainy-day" scenarios, a good error-recovery routine is also fundamental to robust Wi-Fi applications. Refer to *ESP32 Wi-Fi API Error Code*.

4.36.3 ESP32 Wi-Fi API Error Code

All of the ESP32 Wi-Fi APIs have well-defined return values, namely, the error code. The error code can be categorized into:

- No errors, e.g. ESP_OK means that the API returns successfully.
- Recoverable errors, such as ESP_ERR_NO_MEM, etc.
- Non-recoverable, non-critical errors.
- Non-recoverable, critical errors.

Whether the error is critical or not depends on the API and the application scenario, and it is defined by the API user.

The primary principle to write a robust application with Wi-Fi API is to always check the error code and write the error-handling code. Generally, the error-handling code can be used:

- For recoverable errors, in which case you can write a recoverable-error code. For example, when `esp_wifi_start()` returns ESP_ERR_NO_MEM, the recoverable-error code vTaskDelay can be called in order to get a microseconds' delay for another try.
- For non-recoverable, yet non-critical errors, in which case printing the error code is a good method for error handling.
- For non-recoverable and also critical errors, in which case "assert" may be a good method for error handling. For example, if `esp_wifi_set_mode()` returns ESP_ERR_WIFI_NOT_INIT, it means that the Wi-Fi driver is not initialized by `esp_wifi_init()` successfully. You can detect this kind of error very quickly in the application development phase.

In esp_err.h, ESP_ERROR_CHECK checks the return values. It is a rather commonplace error-handling code and can be used as the default error-handling code in the application development phase. However, we strongly recommend that API users write their own error-handling code.

4.36.4 ESP32 Wi-Fi API Parameter Initialization

When initializing struct parameters for the API, one of two approaches should be followed:

- explicitly set all fields of the parameter
- use get API to get current configuration first, then set application specific fields

Initializing or getting the entire structure is very important because most of the time the value 0 indicates the default value is used. More fields may be added to the struct in the future and initializing these to zero ensures the application will still work correctly after IDF is updated to a new release.

4.36.5 ESP32 Wi-Fi Programming Model

The ESP32 Wi-Fi programming model is depicted as follows:

The Wi-Fi driver can be considered a black box that knows nothing about high-layer code, such as the TCP/IP stack, application task, and event task. The application task (code) generally calls *Wi-Fi driver APIs* to initialize Wi-Fi and handles Wi-Fi events when necessary. Wi-Fi driver receives API calls, handles them, and posts events to the application.

Wi-Fi event handling is based on the *esp_event library*. Events are sent by the Wi-Fi driver to the *default event loop*. Application may handle these events in callbacks registered using `esp_event_handler_register()`. Wi-Fi events are also handled by *esp_netif component* to provide a set of default behaviors. For example, when Wi-Fi station connects to an AP, esp_netif will automatically start the DHCP client by default.

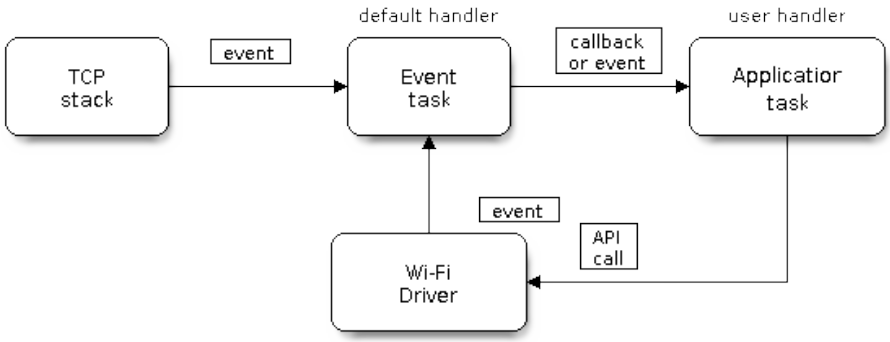

Fig. 52: Wi-Fi Programming Model

4.36.6 ESP32 Wi-Fi Event Description

WIFI_EVENT_WIFI_READY

The Wi-Fi driver will never generate this event, which, as a result, can be ignored by the application event callback. This event may be removed in future releases.

WIFI_EVENT_SCAN_DONE

The scan-done event is triggered by `esp_wifi_scan_start()` and will arise in the following scenarios:

- The scan is completed, e.g., the target AP is found successfully, or all channels have been scanned.
- The scan is stopped by `esp_wifi_scan_stop()`.
- The `esp_wifi_scan_start()` is called before the scan is completed. A new scan will override the current scan and a scan-done event will be generated.

The scan-done event will not arise in the following scenarios:

- It is a blocked scan.
- The scan is caused by `esp_wifi_connect()`.

Upon receiving this event, the event task does nothing. The application event callback needs to call `esp_wifi_scan_get_ap_num()` and `esp_wifi_scan_get_ap_records()` to fetch the scanned AP list and trigger the Wi-Fi driver to free the internal memory which is allocated during the scan **(do not forget to do this!)**. Refer to *ESP32 Wi-Fi Scan* for a more detailed description.

WIFI_EVENT_STA_START

If `esp_wifi_start()` returns ESP_OK and the current Wi-Fi mode is Station or AP+Station, then this event will arise. Upon receiving this event, the event task will initialize the LwIP network interface (netif). Generally, the application event callback needs to call `esp_wifi_connect()` to connect to the configured AP.

WIFI_EVENT_STA_STOP

If `esp_wifi_stop()` returns ESP_OK and the current Wi-Fi mode is Station or AP+Station, then this event will arise. Upon receiving this event, the event task will release the station's IP address, stop the DHCP client, remove TCP/UDP-related connections and clear the LwIP station netif, etc. The application event callback generally does not need to do anything.

WIFI_EVENT_STA_CONNECTED

If `esp_wifi_connect()` returns ESP_OK and the station successfully connects to the target AP, the connection event will arise. Upon receiving this event, the event task starts the DHCP client and begins the DHCP process of getting the IP address. Then, the Wi-Fi driver is ready for sending and receiving data. This moment is good for beginning the application work, provided that the application does not depend on LwIP, namely the IP address. However, if the application is LwIP-based, then you need to wait until the *got ip* event comes in.

WIFI_EVENT_STA_DISCONNECTED

This event can be generated in the following scenarios:

- When `esp_wifi_disconnect()`, or `esp_wifi_stop()`, or `esp_wifi_deinit()` is called and the station is already connected to the AP.
- When `esp_wifi_connect()` is called, but the Wi-Fi driver fails to set up a connection with the AP due to certain reasons, e.g. the scan fails to find the target AP, authentication times out, etc. If there are more than one AP with the same SSID, the disconnected event is raised after the station fails to connect all of the found APs.
- When the Wi-Fi connection is disrupted because of specific reasons, e.g., the station continuously loses N beacons, the AP kicks off the station, the AP' s authentication mode is changed, etc.

Upon receiving this event, the default behavior of the event task is:

- Shuts down the station' s LwIP netif.
- Notifies the LwIP task to clear the UDP/TCP connections which cause the wrong status to all sockets. For socket-based applications, the application callback can choose to close all sockets and re-create them, if necessary, upon receiving this event.

The most common event handle code for this event in application is to call `esp_wifi_connect()` to reconnect the Wi-Fi. However, if the event is raised because `esp_wifi_disconnect()` is called, the application should not call `esp_wifi_connect()` to reconnect. It' s application' s responsibility to distinguish whether the event is caused by `esp_wifi_disconnect()` or other reasons. Sometimes a better reconnect strategy is required, refer to *Wi-Fi Reconnect* and *Scan When Wi-Fi Is Connecting*.

Another thing deserves our attention is that the default behavior of LwIP is to abort all TCP socket connections on receiving the disconnect. Most of time it is not a problem. However, for some special application, this may not be what they want, consider following scenarios:

- The application creates a TCP connection to maintain the application-level keep-alive data that is sent out every 60 seconds.
- Due to certain reasons, the Wi-Fi connection is cut off, and the *WIFI_EVENT_STA_DISCONNECTED* is raised. According to the current implementation, all TCP connections will be removed and the keep-alive socket will be in a wrong status. However, since the application designer believes that the network layer should NOT care about this error at the Wi-Fi layer, the application does not close the socket.
- Five seconds later, the Wi-Fi connection is restored because `esp_wifi_connect()` is called in the application event callback function. **Moreover, the station connects to the same AP and gets the same IPV4 address as before**.
- Sixty seconds later, when the application sends out data with the keep-alive socket, the socket returns an error and the application closes the socket and re-creates it when necessary.

In above scenarios, ideally, the application sockets and the network layer should not be affected, since the Wi-Fi connection only fails temporarily and recovers very quickly. The application can enable "Keep TCP connections when IP changed" via LwIP menuconfig.

IP_EVENT_STA_GOT_IP

This event arises when the DHCP client successfully gets the IPV4 address from the DHCP server, or when the IPV4 address is changed. The event means that everything is ready and the application can begin its tasks (e.g., creating sockets).

The IPV4 may be changed because of the following reasons:

- The DHCP client fails to renew/rebind the IPV4 address, and the station's IPV4 is reset to 0.
- The DHCP client rebinds to a different address.
- The static-configured IPV4 address is changed.

Whether the IPV4 address is changed or NOT is indicated by field `ip_change` of `ip_event_got_ip_t`.

The socket is based on the IPV4 address, which means that, if the IPV4 changes, all sockets relating to this IPV4 will become abnormal. Upon receiving this event, the application needs to close all sockets and recreate the application when the IPV4 changes to a valid one.

IP_EVENT_GOT_IP6

This event arises when the IPV6 SLAAC support auto-configures an address for the ESP32, or when this address changes. The event means that everything is ready and the application can begin its tasks (e.g., creating sockets).

IP_EVENT_STA_LOST_IP

This event arises when the IPV4 address become invalid.

IP_EVENT_STA_LOST_IP doesn't arise immediately after the Wi-Fi disconnects, instead it starts an IPV4 address lost timer, if the IPV4 address is got before ip lost timer expires, IP_EVENT_STA_LOST_IP doesn't happen. Otherwise, the event arises when IPV4 address lost timer expires.

Generally the application don't need to care about this event, it is just a debug event to let the application know that the IPV4 address is lost.

WIFI_EVENT_AP_START

Similar to *WIFI_EVENT_STA_START*.

WIFI_EVENT_AP_STOP

Similar to *WIFI_EVENT_STA_STOP*.

WIFI_EVENT_AP_STACONNECTED

Every time a station is connected to ESP32 AP, the *WIFI_EVENT_AP_STACONNECTED* will arise. Upon receiving this event, the event task will do nothing, and the application callback can also ignore it. However, you may want to do something, for example, to get the info of the connected STA, etc.

WIFI_EVENT_AP_STADISCONNECTED

This event can happen in the following scenarios:

- The application calls *esp_wifi_disconnect()*, or *esp_wifi_deauth_sta()*, to manually disconnect the station.
- The Wi-Fi driver kicks off the station, e.g., because the AP has not received any packets in the past five minutes. The time can be modified by *esp_wifi_set_inactive_time()*.
- The station kicks off the AP.

When this event happens, the event task will do nothing, but the application event callback needs to do something, e.g., close the socket which is related to this station, etc.

WIFI_EVENT_AP_PROBEREQRECVED

This event is disabled by default. The application can enable it via API `esp_wifi_set_event_mask()`. When this event is enabled, it will be raised each time the AP receives a probe request.

WIFI_EVENT_STA_BEACON_TIMEOUT

If the station does not receive the beacon of the connected AP within the inactive time, the beacon timeout happens, the *WIFI_EVENT_STA_BEACON_TIMEOUT* will arise. The application can set inactive time via API `esp_wifi_set_inactive_time()`.

4.36.7 ESP32 Wi-Fi Station General Scenario

Below is a "big scenario" which describes some small scenarios in Station mode:

1. Wi-Fi/LwIP Init Phase

- s1.1: The main task calls `esp_netif_init()` to create an LwIP core task and initialize LwIP-related work.
- s1.2: The main task calls `esp_event_loop_create()` to create a system Event task and initialize an application event's callback function. In the scenario above, the application event's callback function does nothing but relaying the event to the application task.
- s1.3: The main task calls `esp_netif_create_default_wifi_ap()` or `esp_netif_create_default_wifi_sta()` to create default network interface instance binding station or AP with TCP/IP stack.
- s1.4: The main task calls `esp_wifi_init()` to create the Wi-Fi driver task and initialize the Wi-Fi driver.
- s1.5: The main task calls OS API to create the application task.

Step 1.1 ~ 1.5 is a recommended sequence that initializes a Wi-Fi-/LwIP-based application. However, it is **NOT** a must-follow sequence, which means that you can create the application task in step 1.1 and put all other initializations in the application task. Moreover, you may not want to create the application task in the initialization phase if the application task depends on the sockets. Rather, you can defer the task creation until the IP is obtained.

2. Wi-Fi Configuration Phase

Once the Wi-Fi driver is initialized, you can start configuring the Wi-Fi driver. In this scenario, the mode is Station, so you may need to call `esp_wifi_set_mode()` (WIFI_MODE_STA) to configure the Wi-Fi mode as Station. You can call other esp_wifi_set_xxx APIs to configure more settings, such as the protocol mode, country code, bandwidth, etc. Refer to *ESP32 Wi-Fi Configuration*.

Generally, the Wi-Fi driver should be configured before the Wi-Fi connection is set up. But this is **NOT** mandatory, which means that you can configure the Wi-Fi connection anytime, provided that the Wi-Fi driver is initialized successfully. However, if the configuration does not need to change after the Wi-Fi connection is set up, you should configure the Wi-Fi driver at this stage, because the configuration APIs (such as `esp_wifi_set_protocol()`) will cause the Wi-Fi to reconnect, which may not be desirable.

If the Wi-Fi NVS flash is enabled by menuconfig, all Wi-Fi configuration in this phase, or later phases, will be stored into flash. When the board powers on/reboots, you do not need to configure the Wi-Fi driver from scratch. You only need to call esp_wifi_get_xxx APIs to fetch the configuration stored in flash previously. You can also configure the Wi-Fi driver if the previous configuration is not what you want.

3. Wi-Fi Start Phase

- s3.1: Call `esp_wifi_start()` to start the Wi-Fi driver.
- s3.2: The Wi-Fi driver posts *WIFI_EVENT_STA_START* to the event task; then, the event task will do some common things and will call the application event callback function.

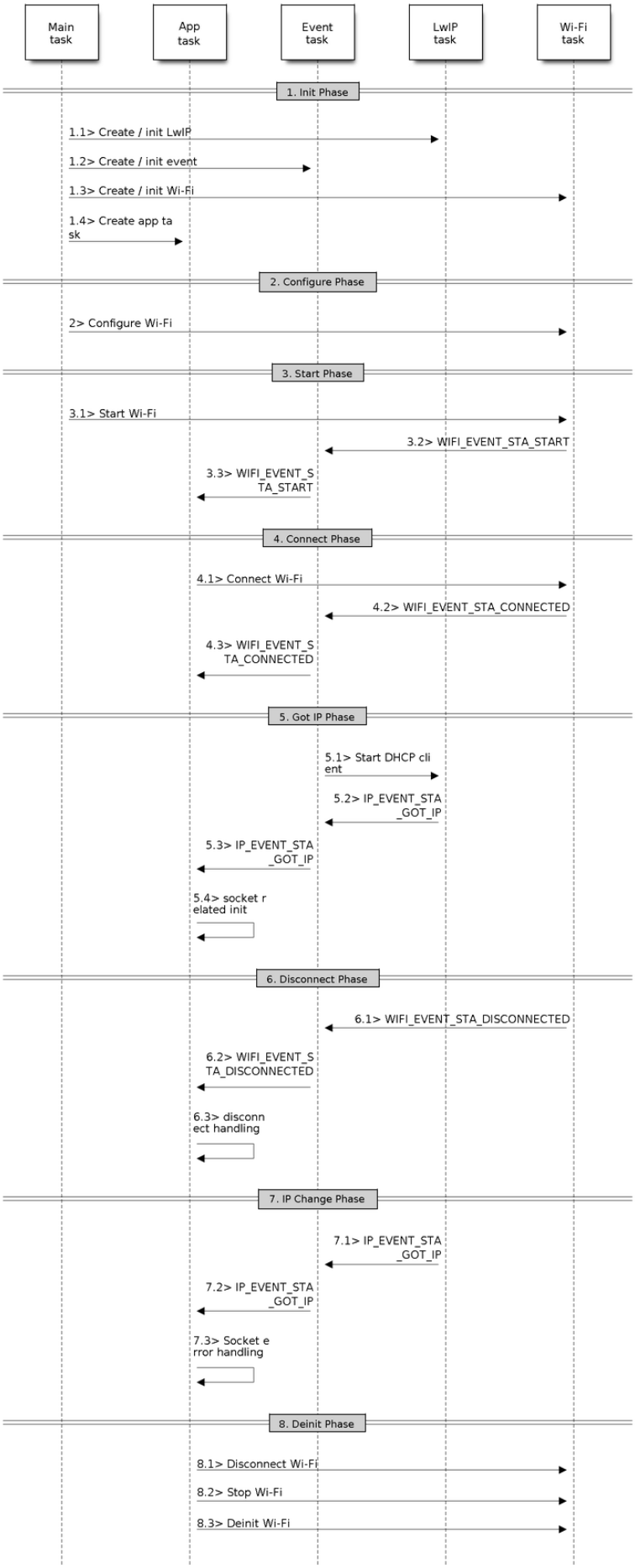

Fig. 53: Sample Wi-Fi Event Scenarios in Station Mode

- s3.3: The application event callback function relays the *WIFI_EVENT_STA_START* to the application task. We recommend that you call `esp_wifi_connect()`. However, you can also call `esp_wifi_connect()` in other phrases after the *WIFI_EVENT_STA_START* arises.

4. Wi-Fi Connect Phase

- s4.1: Once `esp_wifi_connect()` is called, the Wi-Fi driver will start the internal scan/connection process.
- s4.2: If the internal scan/connection process is successful, the *WIFI_EVENT_STA_CONNECTED* will be generated. In the event task, it starts the DHCP client, which will finally trigger the DHCP process.
- s4.3: In the above-mentioned scenario, the application event callback will relay the event to the application task. Generally, the application needs to do nothing, and you can do whatever you want, e.g., print a log, etc.

In step 4.2, the Wi-Fi connection may fail because, for example, the password is wrong, the AP is not found, etc. In a case like this, *WIFI_EVENT_STA_DISCONNECTED* will arise and the reason for such a failure will be provided. For handling events that disrupt Wi-Fi connection, please refer to phase 6.

5. Wi-Fi 'Got IP' Phase

- s5.1: Once the DHCP client is initialized in step 4.2, the *got IP* phase will begin.
- s5.2: If the IP address is successfully received from the DHCP server, then *IP_EVENT_STA_GOT_IP* will arise and the event task will perform common handling.
- s5.3: In the application event callback, *IP_EVENT_STA_GOT_IP* is relayed to the application task. For LwIP-based applications, this event is very special and means that everything is ready for the application to begin its tasks, e.g. creating the TCP/UDP socket, etc. A very common mistake is to initialize the socket before *IP_EVENT_STA_GOT_IP* is received. **DO NOT start the socket-related work before the IP is received.**

6. Wi-Fi Disconnect Phase

- s6.1: When the Wi-Fi connection is disrupted, e.g. because the AP is powered off, the RSSI is poor, etc., *WIFI_EVENT_STA_DISCONNECTED* will arise. This event may also arise in phase 3. Here, the event task will notify the LwIP task to clear/remove all UDP/TCP connections. Then, all application sockets will be in a wrong status. In other words, no socket can work properly when this event happens.
- s6.2: In the scenario described above, the application event callback function relays *WIFI_EVENT_STA_DISCONNECTED* to the application task. We recommend that `esp_wifi_connect()` be called to reconnect the Wi-Fi, close all sockets and re-create them if necessary. Refer to *WIFI_EVENT_STA_DISCONNECTED*.

7. Wi-Fi IP Change Phase

- s7.1: If the IP address is changed, the *IP_EVENT_STA_GOT_IP* will arise with "ip_change" set to true.
- s7.2: **This event is important to the application. When it occurs, the timing is good for closing all created sockets and recreating them.**

8. Wi-Fi Deinit Phase

- s8.1: Call `esp_wifi_disconnect()` to disconnect the Wi-Fi connectivity.
- s8.2: Call `esp_wifi_stop()` to stop the Wi-Fi driver.
- s8.3: Call `esp_wifi_deinit()` to unload the Wi-Fi driver.

4.36.8 ESP32 Wi-Fi AP General Scenario

Below is a "big scenario" which describes some small scenarios in AP mode:

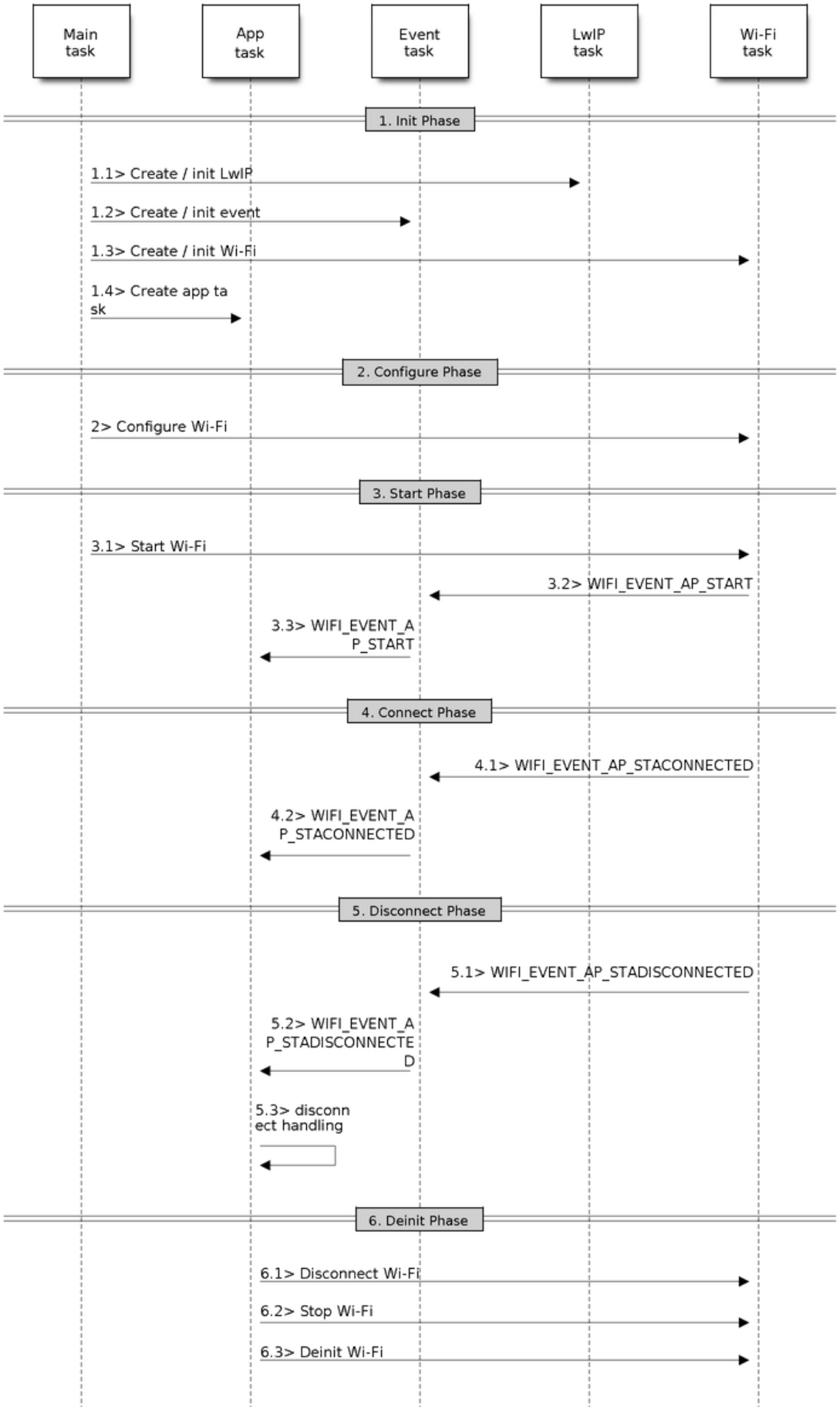

Fig. 54: Sample Wi-Fi Event Scenarios in AP Mode

4.36.9 ESP32 Wi-Fi Scan

Currently, the *esp_wifi_scan_start()* API is supported only in Station or Station+AP mode.

Scan Type

Mode	Description
Active Scan	Scan by sending a probe request. The default scan is an active scan.
Passive Scan	No probe request is sent out. Just switch to the specific channel and wait for a beacon. Application can enable it via the scan_type field of wifi_scan_config_t.
Foreground Scan	This scan is applicable when there is no Wi-Fi connection in Station mode. Foreground or background scanning is controlled by the Wi-Fi driver and cannot be configured by the application.
Background Scan	This scan is applicable when there is a Wi-Fi connection in Station mode or in Station+AP mode. Whether it is a foreground scan or background scan depends on the Wi-Fi driver and cannot be configured by the application.
All-Channel Scan	It scans all of the channels. If the channel field of wifi_scan_config_t is set to 0, it is an all-channel scan.
Specific Channel Scan	It scans specific channels only. If the channel field of wifi_scan_config_t set to 1, it is a specific-channel scan.

The scan modes in above table can be combined arbitrarily, so we totally have 8 different scans:

- All-Channel Background Active Scan
- All-Channel Background Passive Scan
- All-Channel Foreground Active Scan
- All-Channel Foreground Passive Scan
- Specific-Channel Background Active Scan
- Specific-Channel Background Passive Scan
- Specific-Channel Foreground Active Scan
- Specific-Channel Foreground Passive Scan

Scan Configuration

The scan type and other per-scan attributes are configured by *esp_wifi_scan_start()*. The table below provides a detailed description of wifi_scan_config_t.

Field	Description
ssid	If the SSID is not NULL, it is only the AP with the same SSID that can be scanned.
bssid	If the BSSID is not NULL, it is only the AP with the same BSSID that can be scanned.
channel	If "channel" is 0, there will be an all-channel scan; otherwise, there will be a specific-channel scan.
show_hidden	If "show_hidden" is 0, the scan ignores the AP with a hidden SSID; otherwise, the scan considers the hidden AP a normal one.
scan_type	If "scan_type" is WIFI_SCAN_TYPE_ACTIVE, the scan is "active" ; otherwise, it is a "passive" one.
scan_time	This field is used to control how long the scan dwells on each channel. For passive scans, scan_time.passive designates the dwell time for each channel. For active scans, dwell times for each channel are listed in the table below. Here, min is short for scan time.active.min and max is short for scan_time.active.max. • min=0, max=0: scan dwells on each channel for 120 ms. • min>0, max=0: scan dwells on each channel for 120 ms. • min=0, max>0: scan dwells on each channel for `max` ms. • min>0, max>0: the minimum time the scan dwells on each channel is `min` ms. If no AP is found during this time frame, the scan switches to the next channel. Otherwise, the scan dwells on the channel for `max` ms. If you want to improve the performance of the the scan, you can try to modify these two parameters.

There are also some global scan attributes which are configured by API `esp_wifi_set_config()`, refer to *Station Basic Configuration*

Scan All APs on All Channels (Foreground)

Scenario:

The scenario above describes an all-channel, foreground scan. The foreground scan can only occur in Station mode where the station does not connect to any AP. Whether it is a foreground or background scan is totally determined by the Wi-Fi driver, and cannot be configured by the application.

Detailed scenario description:

Scan Configuration Phase

- s1.1: Call `esp_wifi_set_country()` to set the country info if the default country info is not what you want, refer to *Wi-Fi Country Code*.
- s1.2: Call `esp_wifi_scan_start()` to configure the scan. To do so, you can refer to *Scan Configuration*. Since this is an all-channel scan, just set the SSID/BSSID/channel to 0.

Wi-Fi Driver's Internal Scan Phase

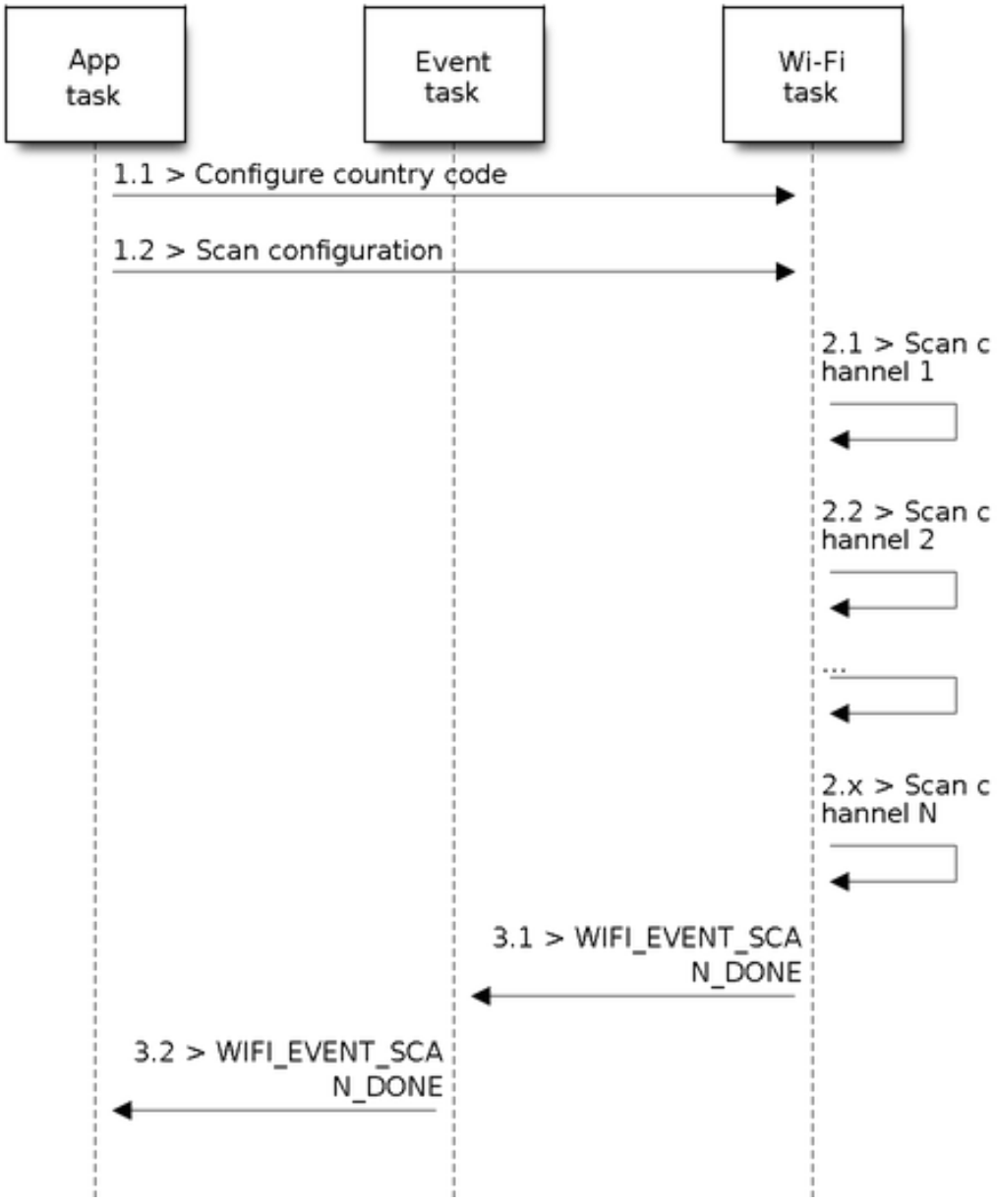

Fig. 55: Foreground Scan of all Wi-Fi Channels

- s2.1: The Wi-Fi driver switches to channel 1, in case the scan type is WIFI_SCAN_TYPE_ACTIVE, and broadcasts a probe request. Otherwise, the Wi-Fi will wait for a beacon from the APs. The Wi-Fi driver will stay in channel 1 for some time. The dwell time is configured in min/max time, with default value being 120 ms.
- s2.2: The Wi-Fi driver switches to channel 2 and performs the same operation as in step 2.1.
- s2.3: The Wi-Fi driver scans the last channel N, where N is determined by the country code which is configured in step 1.1.

Scan-Done Event Handling Phase

- s3.1: When all channels are scanned, *WIFI_EVENT_SCAN_DONE* will arise.
- s3.2: The application's event callback function notifies the application task that *WIFI_EVENT_SCAN_DONE* is received. `esp_wifi_scan_get_ap_num()` is called to get the number of APs that have been found in this scan. Then, it allocates enough entries and calls `esp_wifi_scan_get_ap_records()` to get the AP records. Please note that the AP records in the Wi-Fi driver will be freed, once `esp_wifi_scan_get_ap_records()` is called. Do not call `esp_wifi_scan_get_ap_records()` twice for a single scan-done event. If `esp_wifi_scan_get_ap_records()` is not called when the scan-done event occurs, the AP records allocated by the Wi-Fi driver will not be freed. So, make sure you call `esp_wifi_scan_get_ap_records()`, yet only once.

Scan All APs on All Channels (Background)

Scenario:

The scenario above is an all-channel background scan. Compared to *Scan All APs on All Channels (Foreground)* , the difference in the all-channel background scan is that the Wi-Fi driver will scan the back-to-home channel for 30 ms before it switches to the next channel to give the Wi-Fi connection a chance to transmit/receive data.

Scan for Specific AP on All Channels

Scenario:

This scan is similar to *Scan All APs on All Channels (Foreground)*. The differences are:

- s1.1: In step 1.2, the target AP will be configured to SSID/BSSID.
- s2.1~s2.N: Each time the Wi-Fi driver scans an AP, it will check whether it is a target AP or not. If the scan is WIFI_FAST_SCAN scan and the target AP is found, then the scan-done event will arise and scanning will end; otherwise, the scan will continue. Please note that the first scanned channel may not be channel 1, because the Wi-Fi driver optimizes the scanning sequence.

If there are multiple APs which match the target AP info, for example, if we happen to scan two APs whose SSID is "ap". If the scan is WIFI_FAST_SCAN, then only the first scanned "ap" will be found, if the scan is WIFI_ALL_CHANNEL_SCAN, both "ap" will be found and the station will connect the "ap" according to the configured strategy, refer to *Station Basic Configuration*.

You can scan a specific AP, or all of them, in any given channel. These two scenarios are very similar.

Scan in Wi-Fi Connect

When `esp_wifi_connect()` is called, the Wi-Fi driver will try to scan the configured AP first. The scan in "Wi-Fi Connect" is the same as *Scan for Specific AP On All Channels*, except that no scan-done event will be generated when the scan is completed. If the target AP is found, the Wi-Fi driver will start the Wi-Fi connection; otherwise, *WIFI_EVENT_STA_DISCONNECTED* will be generated. Refer to *Scan for Specific AP On All Channels*.

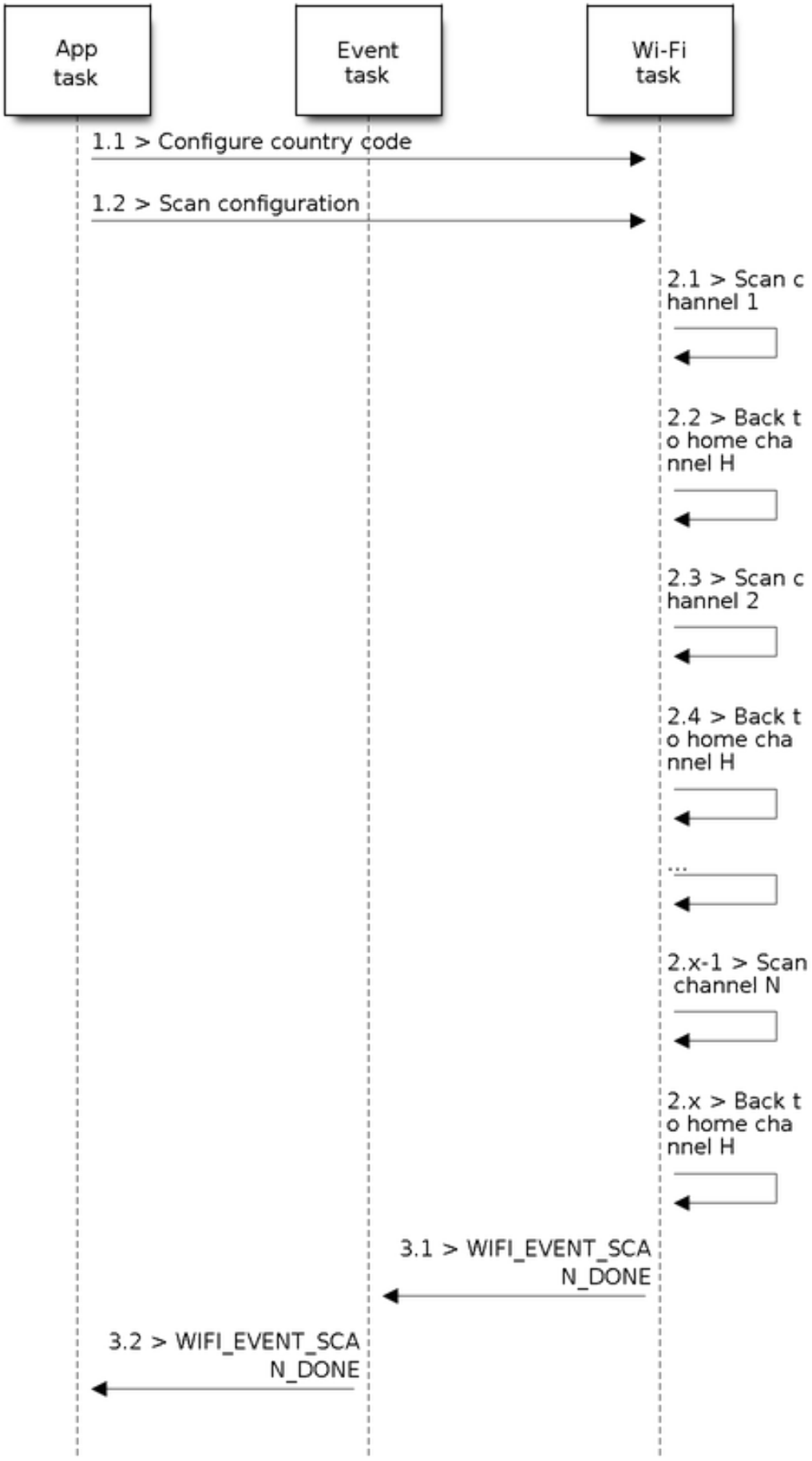

Fig. 56: Background Scan of all Wi-Fi Channels

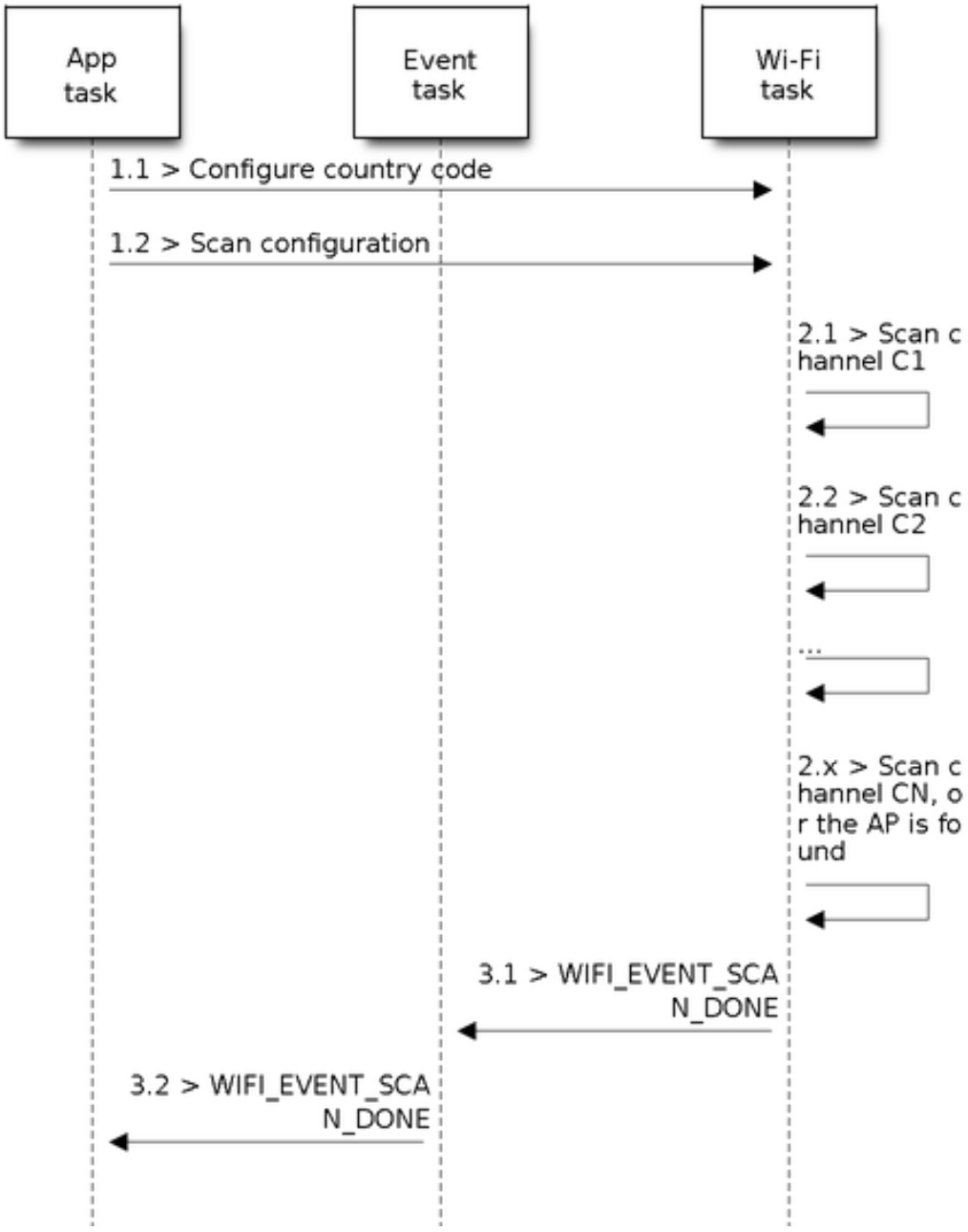

Fig. 57: Scan of specific Wi-Fi Channels

Scan In Blocked Mode

If the block parameter of `esp_wifi_scan_start()` is true, then the scan is a blocked one, and the application task will be blocked until the scan is done. The blocked scan is similar to an unblocked one, except that no scan-done event will arise when the blocked scan is completed.

Parallel Scan

Two application tasks may call `esp_wifi_scan_start()` at the same time, or the same application task calls `esp_wifi_scan_start()` before it gets a scan-done event. Both scenarios can happen. **However, the Wi-Fi driver does not support multiple concurrent scans adequately. As a result, concurrent scans should be avoided.** Support for concurrent scan will be enhanced in future releases, as the ESP32' s Wi-Fi functionality improves continuously.

Scan When Wi-Fi is Connecting

The `esp_wifi_scan_start()` fails immediately if the Wi-Fi is in connecting process because the connecting has higher priority than the scan. If scan fails because of connecting, the recommended strategy is to delay sometime and retry scan again, the scan will succeed once the connecting is completed.

However, the retry/delay strategy may not work all the time. Considering following scenario:

- The station is connecting a non-existed AP or if the station connects the existed AP with a wrong password, it always raises the event *WIFI_EVENT_STA_DISCONNECTED*.
- The application call `esp_wifi_connect()` to do reconnection on receiving the disconnect event.
- Another application task, e.g. the console task, call `esp_wifi_scan_start()` to do scan, the scan always fails immediately because the station is keeping connecting.
- When scan fails, the application simply delay sometime and retry the scan.

In above scenario the scan will never succeed because the connecting is in process. So if the application supports similar scenario, it needs to implement a better reconnect strategy. E.g.

- The application can choose to define a maximum continuous reconnect counter, stop reconnect once the reconnect reaches the max counter.
- The application can choose to do reconnect immediately in the first N continous reconnect, then give a delay sometime and reconnect again.

The application can define its own reconnect strategy to avoid the scan starve to death. Refer to <*Wi-Fi Reconnect*>.

4.36.10 ESP32 Wi-Fi Station Connecting Scenario

This scenario only depicts the case when there is only one target AP are found in scan phase, for the scenario that more than one AP with the same SSID are found, refer to *ESP32 Wi-Fi Station Connecting When Multiple APs Are Found*.

Generally, the application does not need to care about the connecting process. Below is a brief introduction to the process for those who are really interested.

Scenario:

Scan Phase

- s1.1, The Wi-Fi driver begins scanning in "Wi-Fi Connect". Refer to *Scan in Wi-Fi Connect* for more details.
- s1.2, If the scan fails to find the target AP, *WIFI_EVENT_STA_DISCONNECTED* will arise and the reason-code will be WIFI_REASON_NO_AP_FOUND. Refer to *Wi-Fi Reason Code*.

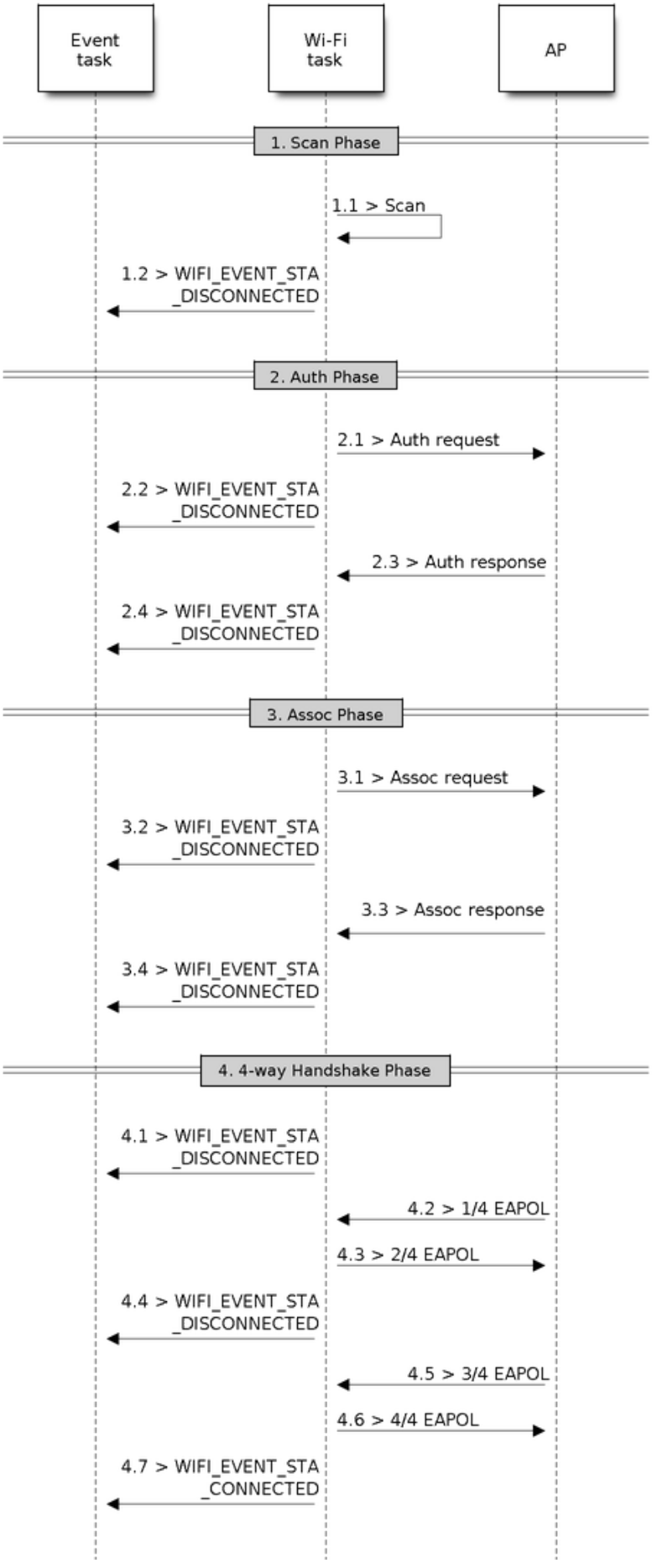

Fig. 58: Wi-Fi Station Connecting Process

Auth Phase

- s2.1, The authentication request packet is sent and the auth timer is enabled.
- s2.2, If the authentication response packet is not received before the authentication timer times out, *WIFI_EVENT_STA_DISCONNECTED* will arise and the reason-code will be WIFI_REASON_AUTH_EXPIRE. Refer to *Wi-Fi Reason Code*.
- s2.3, The auth-response packet is received and the auth-timer is stopped.
- s2.4, The AP rejects authentication in the response and *WIFI_EVENT_STA_DISCONNECTED* arises, while the reason-code is WIFI_REASON_AUTH_FAIL or the reasons specified by the AP. Refer to *Wi-Fi Reason Code*.

Association Phase

- s3.1, The association request is sent and the association timer is enabled.
- s3.2, If the association response is not received before the association timer times out, *WIFI_EVENT_STA_DISCONNECTED* will arise and the reason-code will be WIFI_REASON_ASSOC_EXPIRE. Refer to *Wi-Fi Reason Code*.
- s3.3, The association response is received and the association timer is stopped.
- s3.4, The AP rejects the association in the response and *WIFI_EVENT_STA_DISCONNECTED* arises, while the reason-code is the one specified in the association response. Refer to *Wi-Fi Reason Code*.

Four-way Handshake Phase

- s4.1, The handshake timer is enabled, the 1/4 EAPOL is not received before the handshake timer expires, *WIFI_EVENT_STA_DISCONNECTED* will arise and the reason-code will be WIFI_REASON_HANDSHAKE_TIMEOUT. Refer to *Wi-Fi Reason Code*.
- s4.2, The 1/4 EAPOL is received.
- s4.3, The STA replies 2/4 EAPOL.
- s4.4, If the 3/4 EAPOL is not received before the handshake timer expires, *WIFI_EVENT_STA_DISCONNECTED* will arise and the reason-code will be WIFI_REASON_HANDSHAKE_TIMEOUT. Refer to *Wi-Fi Reason Code*.
- s4.5, The 3/4 EAPOL is received.
- s4.6, The STA replies 4/4 EAPOL.
- s4.7, The STA raises *WIFI_EVENT_STA_CONNECTED*.

Wi-Fi Reason Code

The table below shows the reason-code defined in ESP32. The first column is the macro name defined in esp_wifi_types.h. The common prefix *WIFI_REASON* is removed, which means that *UNSPECIFIED* actually stands for *WIFI_REASON_UNSPECIFIED* and so on. The second column is the value of the reason. The third column is the standard value to which this reason is mapped in section 8.4.1.7 of IEEE 802.11-2012. (For more information, refer to the standard mentioned above.) The last column is a description of the reason.

Reason code	Value	Mapped To	Description
UNSPECIFIED	1	1	Generally, it means an internal failure, e.g., the memory runs out, the internal TX fails, or the reason is received from the remote side, etc.
AUTH_EXPIRE	2	2	The previous authentication is no longer valid. For the ESP Station, this reason is reported when: • auth is timed out. • the reason is received from the AP. For the ESP AP, this reason is reported when: • the AP has not received any packets from the station in the past five minutes. • the AP is stopped by calling `esp_wifi_stop()`. • the station is deauthed by calling `esp_wifi_deauth_sta()`.
AUTH_LEAVE	3	3	De-authenticated, because the sending STA is leaving (or has left). For the ESP Station, this reason is reported when: • it is received from the AP.
ASSOC_EXPIRE	4	4	Disassociated due to inactivity. For the ESP Station, this reason is reported when: • it is received from the AP. For the ESP AP, this reason is reported when: • the AP has not received any packets from the station in the past five minutes. • the AP is stopped by calling `esp_wifi_stop()` • the station is deauthed by calling `esp_wifi_deauth_sta()`
ASSOC_TOOMANY	5	5	Disassociated, because the AP is unable to handle all currently associated STAs at the same time. For the ESP Station, this reason is reported when: • it is received from

4.36.11 ESP32 Wi-Fi Station Connecting When Multiple APs Are Found

This scenario is similar as *ESP32 Wi-Fi Station Connecting Scenario*, the difference is the station will not raise the event *WIFI_EVENT_STA_DISCONNECTED* unless it fails to connect all of the found APs.

4.36.12 Wi-Fi Reconnect

The station may disconnect due to many reasons, e.g. the connected AP is restarted etc. It's the application's responsibility to do the reconnect. The recommended reconnect strategy is to call `esp_wifi_connect()` on receiving event *WIFI_EVENT_STA_DISCONNECTED*.

Sometimes the application needs more complex reconnect strategy:

- If the disconnect event is raised because the `esp_wifi_disconnect()` is called, the application may not want to do reconnect.
- If the `esp_wifi_scan_start()` may be called at anytime, a better reconnect strategy is necessary, refer to *Scan When Wi-Fi is Connecting*.

Another thing we need to consider is the reconnect may not connect the same AP if there are more than one APs with the same SSID. The reconnect always select current best APs to connect.

4.36.13 Wi-Fi Beacon Timeout

The beacon timeout mechanism is used by ESP32 station to detect whether the AP is alive or not. If the station does not receive the beacon of the connected AP within the inactive time, the beacon timeout happens. The application can set inactive time via API `esp_wifi_set_inactive_time()`.

After the beacon timeout happens, the station sends 5 probe requests to AP, it disconnects the AP and raises the event *WIFI_EVENT_STA_DISCONNECTED* if still no probe response or beacon is received from AP.

It should be considered that the timer used for beacon timeout will be reset during the scanning process. It means that the scan process will affect the triggering of the event *WIFI_EVENT_STA_BEACON_TIMEOUT*.

4.36.14 ESP32 Wi-Fi Configuration

All configurations will be stored into flash when the Wi-Fi NVS is enabled; otherwise, refer to *Wi-Fi NVS Flash*.

Wi-Fi Mode

Call `esp_wifi_set_mode()` to set the Wi-Fi mode.

Mode	Description
WIFI_MODE_NULL	Null mode: in this mode, the internal data struct is not allocated to the station and the AP, while both the station and AP interfaces are not initialized for RX/TX Wi-Fi data. Generally, this mode is used for Sniffer, or when you only want to stop both the STA and the AP without calling `esp_wifi_deinit()` to unload the whole Wi-Fi driver.
WIFI_MODE_STA	Station mode: in this mode, `esp_wifi_start()` will init the internal station data, while the station's interface is ready for the RX and TX Wi-Fi data. After `esp_wifi_connect()` is called, the STA will connect to the target target AP.
WIFI_MODE_AP	AP mode: in this mode, `esp_wifi_start()` will init the internal AP data, while the AP's interface is ready for RX/TX Wi-Fi data. Then, the Wi-Fi driver starts broad- casting beacons, and the AP is ready to get connected to other stations.
WIFI_MODE_APSTA	Station-AP coexistence mode: in this mode, `esp_wifi_start()` will simultaneously init both the station and the AP.This is done in station mode and AP mode. Please note that the channel of the external AP, which the ESP Station is connected to, has higher priority over the ESP AP channel.

Station Basic Configuration

API esp_wifi_set_config() can be used to configure the station. The table below describes the fields in detail.

Field	Description
ssid	This is the SSID of the target AP, to which the station wants to connect to.
password	Password of the target AP.
scan_method	For WIFI_FAST_SCAN scan, the scan ends when the first matched AP is found, for WIFI_ALL_CHANNEL_SCAN, the scan finds all matched APs on all channels. The default scan is WIFI_FAST_SCAN.
bssid_set	If bssid_set is 0, the station connects to the AP whose SSID is the same as the field "ssid", while the field "bssid" is ignored. In all other cases, the station connects to the AP whose SSID is the same as the "ssid" field, while its BSSID is the same the "bssid" field .
bssid	This is valid only when bssid_set is 1; see field "bssid_set".
channel	If the channel is 0, the station scans the channel 1 ~ N to search for the target AP; otherwise, the station starts by scanning the channel whose value is the same as that of the "channel" field, and then scans others to find the target AP. If you do not know which channel the target AP is running on, set it to 0.
sort_method	This field is only for WIFI_ALL_CHANNEL_SCAN If the sort_method is WIFI_CONNECT_AP_BY_SIGNAL, all matched APs are sorted by signal, for AP with best signal will be connected firstly. E.g. if the station want to connect AP whose ssid is "apxx", the scan finds two AP whose ssid equals to "apxx", the first AP's signal is -90 dBm, the second AP's signal is -30 dBm, the station connects the second AP firstly, it doesn't connect the first one unless it fails to connect the second one. If the sort_method is WIFI_CONNECT_AP_BY_SECURITY, all matched APs are sorted by security. E.g. if the station wants to connect AP whose ssid is "apxx", the scan finds two AP whose ssid is "apxx", the security of the first found AP is open while the second one is WPA2, the stations connects to the second AP firstly, it doesn't connect the second one unless it fails to connect the first one.
threshold	The threshold is used to filter the found AP, if the RSSI or security mode is less than the configured threshold, the AP will be discard. If the RSSI set to 0, it means default threshold, the default RSSI threshold is -127 dBm. If the authmode threshold is set to 0, it means default threshold, the default authmode threshold is open.

Attention: WEP/WPA security modes are deprecated in IEEE 802.11-2016 specifications and are recommended not to be used. These modes can be rejected using authmode threshold by setting threshold as WPA2 by threshold.authmode as WIFI_AUTH_WPA2_PSK.

AP Basic Configuration

API esp_wifi_set_config() can be used to configure the AP. The table below describes the fields in detail.

Field	Description
ssid	SSID of AP; if the ssid[0] is 0xFF and ssid[1] is 0xFF, the AP defaults the SSID to ESP_aabbcc, where "aabbcc" is the last three bytes of the AP MAC.
password	Password of AP; if the auth mode is WIFI_AUTH_OPEN, this field will be ignored.
ssid_len	Length of SSID; if ssid_len is 0, check the SSID until there is a termination character. If ssid_len > 32, change it to 32; otherwise, set the SSID length according to ssid_len.
channel	Channel of AP; if the channel is out of range, the Wi-Fi driver defaults the channel to channel 1. So, please make sure the channel is within the required range. For more details, refer to *Wi-Fi Country Code*.
authmode	Auth mode of ESP AP; currently, ESP Wi-Fi does not support AUTH_WEP. If the authmode is an invalid value, AP defaults the value to WIFI_AUTH_OPEN.
ssid_hidden	If ssid_hidden is 1, AP does not broadcast the SSID; otherwise, it does broadcast the SSID.
max_connection	Currently, ESP Wi-Fi supports up to 10 Wi-Fi connections. If max_connection > 10, AP defaults the value to 10.
beacon_interval	Beacon interval; the value is 100 ~ 60000 ms, with default value being 100 ms. If the value is out of range, AP defaults it to 100 ms.

Wi-Fi Protocol Mode

Currently, the ESP-IDF supports the following protocol modes:

Protocol Mode	Description
802.11b	Call esp_wifi_set_protocol(ifx, WIFI_PROTOCOL_11B) to set the station/AP to 802.11b-only mode.
802.11bg	Call esp_wifi_set_protocol(ifx, WIFI_PROTOCOL_11B|WIFI_PROTOCOL_11G) to set the station/AP to 802.11bg mode.
802.11g	Call esp_wifi_set_protocol(ifx, WIFI_PROTOCOL_11B|WIFI_PROTOCOL_11G) and esp_wifi_config_11b_rate(ifx, true) to set the station/AP to 802.11g mode.
802.11bgn	Call esp_wifi_set_protocol(ifx, WIFI_PROTOCOL_11B|WIFI_PROTOCOL_11G|WIFI_PROTOCOL_11N) to set the station/ AP to BGN mode.
802.11gn	Call esp_wifi_set_protocol(ifx, WIFI_PROTOCOL_11B|WIFI_PROTOCOL_11G|WIFI_PROTOCOL_11 and esp_wifi_config_11b_rate(ifx, true) to set the station/AP to 802.11gn mode.
802.11 BGNLR	Call esp_wifi_set_protocol(ifx, WIFI_PROTOCOL_11B|WIFI_PROTOCOL_11G|WIFI_PROTOCOL_11N|WIFI_PROTOCOL_LR) to set the station/AP to BGN and the LR mode.
802.11 LR	Call esp_wifi_set_protocol(ifx, WIFI_PROTOCOL_LR) to set the station/AP only to the LR mode. **This mode is an Espressif-patented mode which can achieve a one-kilometer line of sight range. Please make sure both the station and the AP are connected to an ESP device.**

Long Range (LR)

Long Range (LR) mode is an Espressif-patented Wi-Fi mode which can achieve a one-kilometer line of sight range. It has better reception sensitivity, stronger anti-interference ability and longer transmission distance than the traditional 802.11B mode.

LR Compatibility Since LR is Espressif unique Wi-Fi mode, only ESP32 devices can transmit and receive the LR data. In other words, the ESP32 device should NOT transmit the data in LR data rate if the connected device doesn't support LR. The application can achieve this by configuring suitable Wi-Fi mode. If the negotiated mode supports LR, the ESP32 may transmit data in LR rate, otherwise, ESP32 will transmit all data in traditional Wi-Fi data rate.

Following table depicts the Wi-Fi mode negotiation:

APSTA	BGN	BG	B	BGNLR	BGLR	BLR	LR
BGN	BGN	BG	B	BGN	BG	B	•
BG	BG	BG	B	BG	BG	B	•
B	B	B	B	B	B	B	•
BGNLR	•	•	•	BGNLR	BGLR	BLR	LR
BGLR	•	•	•	BGLR	BGLR	BLR	LR
BLR	•	•	•	BLR	BLR	BLR	LR
LR	•	•	•	LR	LR	LR	LR

In above table, the row is the Wi-Fi mode of AP and the column is the Wi-Fi mode of station. The "-" indicates Wi-Fi mode of the AP and station are not compatible.

According to the table, we can conclude that:

- For LR enabled in ESP32 AP, it's incompatible with traditional 802.11 mode because the beacon is sent in LR mode.
- For LR enabled in ESP32 station and the mode is NOT LR only mode, it's compatible with traditional 802.11 mode.
- If both station and AP are ESP32 devices and both of them enable LR mode, the negotiated mode supports LR.

If the negotiated Wi-Fi mode supports both traditional 802.11 mode and LR mode, it's the Wi-Fi driver's responsibility to automatically select the best data rate in different Wi-Fi mode and the application don't need to care about it.

LR Impacts to Traditional Wi-Fi device The data transmission in LR rate has no impacts on the traditional Wi-Fi device because:

- The CCA and backoff process in LR mode are consistent with 802.11 specification.
- The traditional Wi-Fi device can detect the LR signal via CCA and do backoff.

In other words, the impact transmission in LR mode is similar as the impact in 802.11B mode.

LR Transmission Distance The reception sensitivity of LR has about 4 dB gain than the traditional 802.11B mode, theoretically the transmission distance is about 2 to 2.5 times the distance of 11B.

LR Throughput The LR rate has very limited throughput, because the raw PHY data rates is 1/2 Mbps and 1/4 Mbps.

When to Use LR The general conditions for using LR are:

- Both the AP and station are Espressif devices.
- Long distance Wi-Fi connection and data transmission is required.
- Data throughput requirements are very small, such as remote device control, etc.

Wi-Fi Country Code

Call *esp_wifi_set_country()* to set the country info. The table below describes the fields in detail. Please consult local 2.4 GHz RF operating regulations before configuring these fields.

Field	Description
cc[3]	Country code string. This attribute identifies the country or noncountry entity in which the station/AP is operating. If it is a country, the first two octets of this string is the two-character country info as described in the document ISO/IEC3166-1. The third octect is one of the following: • an ASCII space character, which means the regulations under which the station/AP is operating encompass all environments for the current frequency band in the country. • an ASCII 'O' character, which means the regulations under which the station/AP is operating are for an outdoor environment only. • an ASCII 'I' character, which means the regulations under which the station/AP is operating are for an indoor environment only. • an ASCII 'X' character, which means the station/AP is operating under a non-country entity. The first two octets of the noncountry entity is two ASCII 'XX' characters. • the binary representation of the Operating Class table number currently in use. Refer to Annex E of IEEE Std 802.11-2020.
schan	Start channel. It is the minimum channel number of the regulations under which the station/AP can operate.
nchan	Total number of channels as per the regulations. For example, if the schan=1, nchan=13, then the station/AP can send data from channel 1 to 13.
policy	Country policy. This field controls which country info will be used if the configured country info is in conflict with the connected AP's. For more details on related policies, see the following section.

The default country info is:

```
wifi_country_t config = {
    .cc = "CN",
    .schan = 1,
    .nchan = 13,
    .policy = WIFI_COUNTRY_POLICY_AUTO,
};
```

If the Wi-Fi Mode is station/AP coexist mode, they share the same configured country info. Sometimes, the country info of AP, to which the station is connected, is different from the country info of configured. For example, the configured station has country info:

```
wifi_country_t config = {
    .cc = "JP",
    .schan = 1,
    .nchan = 14,
    .policy = WIFI_COUNTRY_POLICY_AUTO,
};
```

but the connected AP has country info:

```
wifi_country_t config = {
    .cc = "CN",
    .schan = 1,
    .nchan = 13,
};
```

then country info of connected AP's is used.

The following table depicts which country info is used in different Wi-Fi modes and different country policies, and it also describes the impact on active scan.

Wi-Fi Mode	Policy	Description
Station	WIFI_COUNTRY_POLICY_AUTO	If the connected AP has country IE in its beacon, the country info equals to the country info in beacon. Otherwise, use the default country info. For scan: Use active scan from 1 to 11 and use passive scan from 12 to 14. Always keep in mind that if an AP with hidden SSID and station is set to a passive scan channel, the passive scan will not find it. In other words, if the application hopes to find the AP with hidden SSID in every channel, the policy of country info should be configured to WIFI_COUNTRY_POLICY_MANUAL.
Station	WIFI_COUNTRY_POLICY_MANUAL	Always use the configured country info. For scan: Use active scan from schan to schan+nchan-1.
AP	WIFI_COUNTRY_POLICY_AUTO	Always use the configured country info.
AP	WIFI_COUNTRY_POLICY_MANUAL	Always use the configured country info.
Station/AP-coexistence	WIFI_COUNTRY_POLICY_AUTO	Station: Same as station mode with policy WIFI_COUNTRY_POLICY_AUTO. AP: If the station does not connect to any external AP, the AP uses the configured country info. If the station connects to an external AP, the AP has the same country info as the station.
Station/AP-coexistence	WIFI_COUNTRY_POLICY_MANUAL	Station: Same as station mode with policy WIFI_COUNTRY_POLICY_MANUAL. AP: Same as AP mode with policy WIFI_COUNTRY_POLICY_MANUAL.

Home Channel In AP mode, the home channel is defined as the AP channel. In Station mode, home channel is defined as the channel of AP which the station is connected to. In Station/AP-coexistence mode, the home channel of AP and station must be the same, if they are different, the station's home channel is always in priority. Take the following as an example: the AP is on channel 6, and the station connects to an AP whose channel is 9. Since the station's home channel has higher priority, the AP needs to switch its channel from 6 to make sure that it has the same home channel as the station. While switching channel, the ESP32 in SoftAP mode will notify the connected stations about the channel migration using a Channel Switch Announcement (CSA). Station that supports channel switching will transit without disconnecting and reconnecting to the SoftAP.

Wi-Fi Vendor IE Configuration

By default, all Wi-Fi management frames are processed by the Wi-Fi driver, and the application does not need to care about them. Some applications, however, may have to handle the beacon, probe request, probe response and other management frames. For example, if you insert some vendor-specific IE into the management frames, it is only the management frames which contain this vendor-specific IE that will be processed. In ESP32, `esp_wifi_set_vendor_ie()` and `esp_wifi_set_vendor_ie_cb()` are responsible for this kind of tasks.

4.36.15 Wi-Fi Easy Connect™ (DPP)

Wi-Fi Easy Connect™ (or Device Provisioning Protocol) is a secure and standardized provisioning protocol for configuration of Wi-Fi Devices. More information can be found on the API reference page *esp_dpp*.

WPA2-Enterprise

WPA2-Enterprise is the secure authentication mechanism for enterprise wireless networks. It uses RADIUS server for authentication of network users before connecting to the Access Point. The authentication process is based on 802.1X policy and comes with different Extended Authentication Protocol (EAP) methods like TLS, TTLS, PEAP etc. RADIUS server authenticates the users based on their credentials (username and password), digital certificates or both. When ESP32 in Station mode tries to connect to an AP in enterprise mode, it sends authentication request to AP which is sent to RADIUS server by AP for authenticating the Station. Based on different EAP methods, the parameters can be set in configuration which can be opened using `idf.py menuconfig`. WPA2_Enterprise is supported by ESP32 only in Station mode.

For establishing a secure connection, AP and Station negotiate and agree on the best possible cipher suite to be used. ESP32 supports 802.1X/EAP (WPA) method of AKM and Advanced encryption standard with Counter Mode Cipher Block Chaining Message Authentication protocol (AES-CCM) cipher suite. It also supports the cipher suites supported by mbedtls if *USE_MBEDTLS_CRYPTO* flag is set.

ESP32 currently supports the following EAP methods:

- EAP-TLS: This is certificate based method and only requires SSID and EAP-IDF.
- PEAP: This is Protected EAP method. Username and Password are mandatory.
- **EAP-TTLS: This is credentials based method. Only server authentication is mandatory while user authentication**
  - PAP: Password Authentication Protocol.
  - CHAP: Challenge Handshake Authentication Protocol.
  - MSCHAP and MSCHAP-V2.

Detailed information on creating certificates and how to run wpa2_enterprise example on ESP32 can be found in wifi/wifi_enterprise.

4.36.16 Wireless Network Management

Wireless Network Management allows client devices to exchange information about the network topology, including information related to RF environment. This makes each client network-aware, facilitating overall improvement in the performace of the wireless network. It is part of 802.11v specification. It also enables client to support Network assisted Roaming. - Network assisted Roaming: Enables WLAN to send messages to associated clients, resulting clients to associate with APs with better link metrics. This is useful for both load balancing and in directing poorly connected clients.

Current implementation of 802.11v includes support for BSS transition management frames.

4.36.17 Radio Resource Measurement

Radio Resource Measurement (802.11k) is intended to improve the way traffic is distributed within a network. In a wireless LAN, each device normally connects to the access point (AP) that provides the strongest signal. Depending on the number and geographic locations of the subscribers, this arrangement can sometimes lead to excessive demand on one AP and underutilization of others, resulting in degradation of overall network performance. In a network conforming to 802.11k, if the AP having the strongest signal is loaded to its full capacity, a wireless device can be moved to one of the underutilized APs. Even though the signal may be weaker, the overall throughput is greater because more efficient use is made of the network resources.

Current implementation of 802.11k includes support for beacon measurement report, link measurement report and neighbor request.

Refer IDF example examples/wifi/roaming/README.md to set up and use these APIs. Example code only demonstrates how these APIs can be used, the application should define its own algorithm and cases as required.

4.36.18 ESP32 Wi-Fi Power-saving Mode

Station Sleep

Currently, ESP32 Wi-Fi supports the Modem-sleep mode which refers to the legacy power-saving mode in the IEEE 802.11 protocol. Modem-sleep mode works in Station-only mode and the station must connect to the AP first. If the Modem-sleep mode is enabled, station will switch between active and sleep state periodically. In sleep state, RF, PHY and BB are turned off in order to reduce power consumption. Station can keep connection with AP in modem-sleep mode.

Modem-sleep mode includes minimum and maximum power save modes. In minimum power save mode, station wakes up every DTIM to receive beacon. Broadcast data will not be lost because it is transmitted after DTIM. However, it can not save much more power if DTIM is short for DTIM is determined by AP.

In maximum power-saving mode, station wakes up in every listen interval to receive beacon. This listen interval can be set to be longer than the AP DTIM period. Broadcast data may be lost because station may be in sleep state at DTIM time. If listen interval is longer, more power is saved, but broadcast data is more easy to lose. Listen interval can be configured by calling API *esp_wifi_set_config()* before connecting to AP.

Call `esp_wifi_set_ps(WIFI_PS_MIN_MODEM)` to enable Modem-sleep minimum power-saving mode or `esp_wifi_set_ps(WIFI_PS_MAX_MODEM)` to enable Modem-sleep maximum power-saving mode after calling *esp_wifi_init()*. When station connects to AP, Modem-sleep will start. When station disconnects from AP, Modem-sleep will stop.

Call `esp_wifi_set_ps(WIFI_PS_NONE)` to disable modem sleep entirely. This has much higher power consumption, but provides minimum latency for receiving Wi-Fi data in real time. When modem sleep is enabled, received Wi-Fi data can be delayed for as long as the DTIM period (minimum power save mode) or the listen interval (maximum power save mode). Disabling modem sleep entirely is not possible for Wi-Fi and Bluetooth coexist mode.

The default Modem-sleep mode is WIFI_PS_MIN_MODEM.

AP Sleep

Currently ESP32 AP doesn't support all of the power save feature defined in Wi-Fi specification. To be specific, the AP only caches unicast data for the stations connect to this AP, but doesn't cache the multicast data for the stations. If stations connected to the ESP32 AP are power save enabled, they may experience multicast packet loss.

In the future, all power save features will be supported on ESP32 AP.

4.36.19 ESP32 Wi-Fi Throughput

The table below shows the best throughput results we got in Espressif's lab and in a shield box.

Type/Throughput	Air In Lab	Shield-box	Test Tool	IDF Version (commit ID)
Raw 802.11 Packet RX	N/A	**130 MBit/s**	Internal tool	NA
Raw 802.11 Packet TX	N/A	**130 MBit/s**	Internal tool	NA
UDP RX	30 MBit/s	85 MBit/s	iperf example	15575346
UDP TX	30 MBit/s	75 MBit/s	iperf example	15575346
TCP RX	20 MBit/s	65 MBit/s	iperf example	15575346
TCP TX	20 MBit/s	75 MBit/s	iperf example	15575346

When the throughput is tested by iperf example, the sdkconfig is examples/wifi/iperf/sdkconfig.defaults.esp32.

4.36.20 Wi-Fi 80211 Packet Send

The *esp_wifi_80211_tx()* API can be used to:

- Send the beacon, probe request, probe response, action frame.
- Send the non-QoS data frame.

It cannot be used for sending encrypted or QoS frames.

Preconditions of Using `esp_wifi_80211_tx()`

- The Wi-Fi mode is station, or AP, or station/AP.
- Either esp_wifi_set_promiscuous(true), or *esp_wifi_start()*, or both of these APIs return ESP_OK. This is because Wi-Fi hardware must be initialized before *esp_wifi_80211_tx()* is called. In ESP32, both esp_wifi_set_promiscuous(true) and *esp_wifi_start()* can trigger the initialization of Wi-Fi hardware.
- The parameters of *esp_wifi_80211_tx()* are hereby correctly provided.

Data rate

- The default data rate is 1 Mbps.
- Can set any rate through *esp_wifi_config_80211_tx_rate()* API.
- Can set any bandwidth through *esp_wifi_set_bandwidth()* API.

Side-Effects to Avoid in Different Scenarios

Theoretically, if the side-effects the API imposes on the Wi-Fi driver or other stations/APs are not considered, a raw 802.11 packet can be sent over the air with any destination MAC, any source MAC, any BSSID, or any other types of packet. However, robust or useful applications should avoid such side-effects. The table below provides some tips and recommendations on how to avoid the side-effects of *esp_wifi_80211_tx()* in different scenarios.

Scenario	Description
No Wi-Fi connection	In this scenario, no Wi-Fi connection is set up, so there are no side-effects on the Wi-Fi driver. If en_sys_seq==true, the Wi-Fi driver is responsible for the sequence control. If en_sys_seq==false, the application needs to ensure that the buffer has the correct sequence. Theoretically, the MAC address can be any address. However, this may impact other stations/APs with the same MAC/BSSID. Side-effect example#1 The application calls *esp_wifi_80211_tx()* to send a beacon with BSSID == mac_x in AP mode, but the mac_x is not the MAC of the AP interface. Moreover, there is another AP, e.g., "other-AP" , whose BSSID is mac_x. If this happens, an "unexpected behavior"may occur, because the stations which connect to the "other-AP"cannot figure out whether the beacon is from the "other-AP" or the *esp_wifi_80211_tx()*. To avoid the above-mentioned side-effects, it is recommended that: • If esp_wifi_80211_tx is called in station mode, the first MAC should be a multicast MAC or the exact target-device's MAC, while the second MAC should be that of the station interface. • If esp_wifi_80211_tx is called in AP mode, the first MAC should be a multicast MAC or the exact target-device's MAC, while the second MAC should be that of the AP interface. The recommendations above are only for avoiding side-effects and can be ignored when there are good reasons.
Have Wi-Fi connection	When the Wi-Fi connection is already set up, and the sequence is controlled by the application, the latter may impact the sequence control of the Wi-Fi connection as a whole. So, the en_sys_seq need to be true, otherwise ESP_ERR_WIFI_ARG is returned. The MAC-address recommendations in the "No Wi-Fi connection" scenario also apply to this scenario. If the Wi-Fi mode is station mode, the MAC address1 is the MAC of AP to which the station is connected, and the MAC address2 is the MAC of station interface, it is said that the packet is sent from the station to AP. Otherwise, if the Wi-Fi is in AP mode, the MAC address1 is the MAC of the station that connects to this AP, and the MAC address2 is the MAC of AP interface, it is said that the packet is sent from the AP to station. To avoid conflicting with Wi-Fi connections, the following checks are applied: • If the packet type is data and is sent from the station to AP, the ToDS bit in IEEE 80211 frame control should be 1 and the FromDS bit should be 0. Otherwise, the packet will be discarded by Wi-Fi driver. • If the packet type is data and is sent from the AP to station, the ToDS bit in IEEE 80211 frame control should be 0 and the FromDS bit should be 1. Otherwise, the packet will be discarded by Wi-Fi driver. • If the packet is sent from station to AP or from AP to station, the Power Management, More Data, and Re-Transmission bits should be 0. Otherwise, the packet will be discarded by Wi-Fi driver. ESP_ERR_WIFI_ARG is returned if any check fails.

4.36.21 Wi-Fi Sniffer Mode

The Wi-Fi sniffer mode can be enabled by esp_wifi_set_promiscuous(). If the sniffer mode is enabled, the following packets **can** be dumped to the application:

- 802.11 Management frame.
- 802.11 Data frame, including MPDU, AMPDU, AMSDU, etc.
- 802.11 MIMO frame, for MIMO frame, the sniffer only dumps the length of the frame.
- 802.11 Control frame.

The following packets will **NOT** be dumped to the application:

- 802.11 error frame, such as the frame with a CRC error, etc.

For frames that the sniffer **can** dump, the application can additionally decide which specific type of packets can be filtered to the application by using *esp_wifi_set_promiscuous_filter()* and

esp_wifi_set_promiscuous_ctrl_filter(). By default, it will filter all 802.11 data and management frames to the application.

The Wi-Fi sniffer mode can be enabled in the Wi-Fi mode of WIFI_MODE_NULL, or WIFI_MODE_STA, or WIFI_MODE_AP, or WIFI_MODE_APSTA. In other words, the sniffer mode is active when the station is connected to the AP, or when the AP has a Wi-Fi connection. Please note that the sniffer has a **great impact** on the throughput of the station or AP Wi-Fi connection. Generally, we should **NOT** enable the sniffer, when the station/AP Wi-Fi connection experiences heavy traffic unless we have special reasons.

Another noteworthy issue about the sniffer is the callback wifi_promiscuous_cb_t. The callback will be called directly in the Wi-Fi driver task, so if the application has a lot of work to do for each filtered packet, the recommendation is to post an event to the application task in the callback and defer the real work to the application task.

4.36.22 Wi-Fi Multiple Antennas

The Wi-Fi multiple antennas selecting can be depicted as following picture:

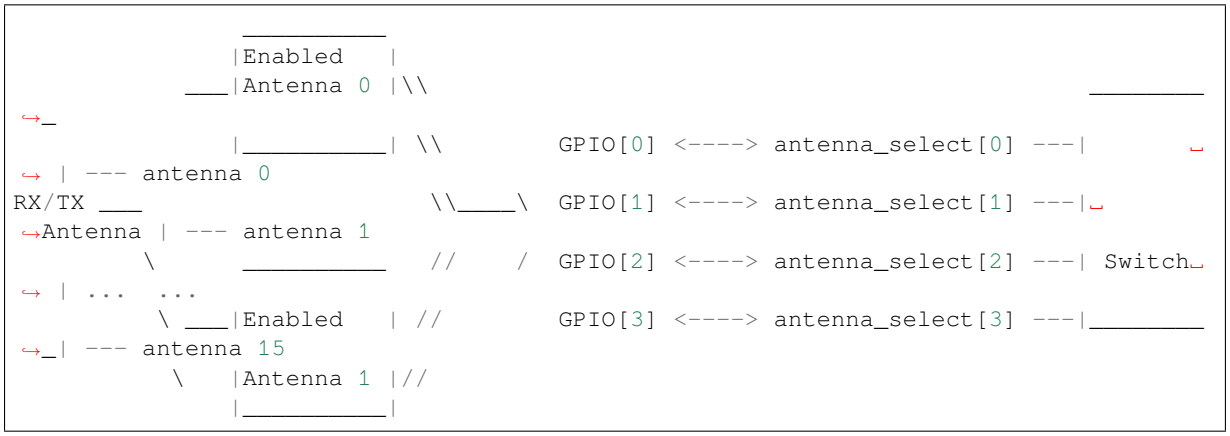

ESP32 supports up to sixteen antennas through external antenna switch. The antenna switch can be controlled by up to four address pins - antenna_select[0:3]. Different input value of antenna_select[0:3] means selecting different antenna. E.g. the value '0b1011' means the antenna 11 is selected. The default value of antenna_select[3:0] is '0b0000', it means the antenna 0 is selected by default.

Up to four GPIOs are connected to the four active high antenna_select pins. ESP32 can select the antenna by control the GPIO[0:3]. The API *esp_wifi_set_ant_gpio()* is used to configure which GPIOs are connected to antenna_selects. If GPIO[x] is connected to antenna_select[x], then gpio_config->gpio_cfg[x].gpio_select should be set to 1 and gpio_config->gpio_cfg[x].gpio_num should be provided.

For the specific implementation of the antenna switch, there may be illegal values in *antenna_select[0:3]*. It means that ESP32 may support less than sixteen antennas through the switch. For example, ESP32-WROOM-DA which uses RTC6603SP as the antenna switch, supports two antennas. Two GPIOs are connected to two active high antenna selection inputs. The value '0b01' means the antenna 0 is selected, the value '0b10' means the antenna 1 is selected. Values '0b00' and '0b11' are illegal.

Although up to sixteen antennas are supported, only one or two antennas can be simultaneously enabled for RX/TX. The API *esp_wifi_set_ant()* is used to configure which antennas are enabled.

The enabled antennas selecting algorithm is also configured by *esp_wifi_set_ant()*. The RX/TX antenna mode can be WIFI_ANT_MODE_ANT0, WIFI_ANT_MODE_ANT1 or WIFI_ANT_MODE_AUTO. If the antenna mode is WIFI_ANT_MODE_ANT0, the enabled antenna 0 is selected for RX/TX data. If the antenna mode is WIFI_ANT_MODE_ANT1, the enabled antenna 1 is selected for RX/TX data. Otherwise, Wi-Fi automatically selects the antenna that has better signal from the enabled antennas.

If the RX antenna mode is WIFI_ANT_MODE_AUTO, the default antenna mode also needs to be set. Because the RX antenna switching only happens when some conditions are met, e.g. the RX antenna starts to switch if the RSSI is lower than -65 dBm and if another antenna has better signal etc, RX uses the default antenna if the conditions are not met. If the default antenna mode is WIFI_ANT_MODE_ANT1, the enabled antenna 1 is used as the default RX antenna, otherwise the enabled antenna 0 is used as the default RX antenna.

Some limitations need to be considered:

- The TX antenna can be set to WIFI_ANT_MODE_AUTO only if the RX antenna mode is WIFI_ANT_MODE_AUTO because TX antenna selecting algorithm is based on RX antenna in WIFI_ANT_MODE_AUTO type.
- Currently Bluetooth® doesn't support the multiple antennas feature, please don't use multiple antennas related APIs.

Following is the recommended scenarios to use the multiple antennas:

- In Wi-Fi mode WIFI_MODE_STA, both RX/TX antenna modes are configured to WIFI_ANT_MODE_AUTO. The Wi-Fi driver selects the better RX/TX antenna automatically.
- The RX antenna mode is configured to WIFI_ANT_MODE_AUTO. The TX antenna mode is configured to WIFI_ANT_MODE_ANT0 or WIFI_ANT_MODE_ANT1. The applications can choose to always select a specified antenna for TX, or implement their own TX antenna selecting algorithm, e.g. selecting the TX antenna mode based on the channel switch information etc.
- Both RX/TX antenna modes are configured to WIFI_ANT_MODE_ANT0 or WIFI_ANT_MODE_ANT1.

Wi-Fi Multiple Antennas Configuration

Generally, following steps can be taken to configure the multiple antennas:

- Configure which GPIOs are connected to the antenna_selects, for example, if four antennas are supported and GPIO20/GPIO21 are connected to antenna_select[0]/antenna_select[1], the configurations look like:

```
wifi_ant_gpio_config_t config = {
    { .gpio_select = 1, .gpio_num = 20 },
    { .gpio_select = 1, .gpio_num = 21 }
};
```

- Configure which antennas are enabled and how RX/TX use the enabled antennas, for example, if antenna1 and antenna3 are enabled, the RX needs to select the better antenna automatically and uses antenna1 as its default antenna, the TX always selects the antenna3. The configuration looks like:

```
wifi_ant_config_t config = {
    .rx_ant_mode = WIFI_ANT_MODE_AUTO,
    .rx_ant_default = WIFI_ANT_ANT0,
    .tx_ant_mode = WIFI_ANT_MODE_ANT1,
    .enabled_ant0 = 1,
    .enabled_ant1 = 3
};
```

4.36.23 Wi-Fi Channel State Information

Channel state information (CSI) refers to the channel information of a Wi-Fi connection. In ESP32, this information consists of channel frequency responses of sub-carriers and is estimated when packets are received from the transmitter. Each channel frequency response of sub-carrier is recorded by two bytes of signed characters. The first one is imaginary part and the second one is real part. There are up to three fields of channel frequency responses according to the type of received packet. They are legacy long training field (LLTF), high throughput LTF (HT-LTF) and space time block code HT-LTF (STBC-HT-LTF). For different types of packets which are received on channels with different state, the sub-carrier index and total bytes of signed characters of CSI is shown in the following table.

channel	secondary channel	none			below					above				
packet information	signal mode	non HT	HT		non HT	HT				non HT	HT			
	channel bandwidth	20 MHz	20 MHz		20 MHz	20 MHz		40 MHz		20 MHz	20 MHz		40 MHz	
	STBC	non STBC	non STBC	STBC	non STBC	non STBC	STBC	non STBC	STBC	non STBC	non STBC	STBC	non STBC	STBC
sub-carrier index	LLTF	0~31, -32~-1	0~31, -32~-1	0~31, -32~-1	0~63	0~63	0~63	0~63	0~63	-64~-1	-64~-1	-64~-1	-64~-1	-64~-1
	HT-LTF	•	0~31, -32~-1	0~31, -32~-1	•	0~63	0~62	0~63, -64~-1	0~60, -60~-1	•	-64~-1	-62~-1	0~63, -64~-1	0~60, -60~-1
	STBC-HT-LTF	•	•	0~31, -32~-1	•	•	0~62	•	0~60, -60~-1	•	•	-62~-1	•	0~60, -60~-1
total bytes		128	256	384	128	256	380	384	612	128	256	376	384	612

All of the information in the table can be found in the structure wifi_csi_info_t.

- Secondary channel refers to secondary_channel field of rx_ctrl field.
- Signal mode of packet refers to sig_mode field of rx_ctrl field.
- Channel bandwidth refers to cwb field of rx_ctrl field.
- STBC refers to stbc field of rx_ctrl field.
- Total bytes refers to len field.
- The CSI data corresponding to each Long Training Field(LTF) type is stored in a buffer starting from the buf field. Each item is stored as two bytes: imaginary part followed by real part. The order of each item is the same as the sub-carrier in the table. The order of LTF is: LLTF, HT-LTF, STBC-HT-LTF. However all 3 LTFs may not be present, depending on the channel and packet information (see above).
- If first_word_invalid field of wifi_csi_info_t is true, it means that the first four bytes of CSI data is invalid due to a hardware limitation in ESP32.
- More information like RSSI, noise floor of RF, receiving time and antenna is in the rx_ctrl field.

When imaginary part and real part data of sub-carrier are used, please refer to the table below.

PHY standard	Sub-carrier range	Pilot sub-carrier	Sub-carrier(total/data)
802.11a/g	-26 to +26	-21, -7, +7, +21	52 total, 48 usable
802.11n, 20MHz	-28 to +28	-21, -7, +7, +21	56 total, 52 usable
802.11n, 40MHz	-57 to +57	-53, -25, -11, +11, +25, +53	114 total, 108 usable

Note:

- For STBC packet, CSI is provided for every space-time stream without CSD (cyclic shift delay). As each cyclic shift on the additional chains shall be -200 ns, only the CSD angle of first space-time stream is recorded in sub-carrier 0 of HT-LTF and STBC-HT-LTF for there is no channel frequency response in sub-carrier 0. CSD[10:0] is 11 bits, ranging from -pi to pi.
- If LLTF, HT-LTF, or STBC-HT-LTF is not enabled by calling API `esp_wifi_set_csi_config()`, the total bytes of CSI data will be fewer than that in the table. For example, if LLTF and HT-LTF is not enabled

and STBC-HT-LTF is enabled, when a packet is received with the condition above/HT/40MHz/STBC, the total bytes of CSI data is 244 ((61 + 60) * 2 + 2 = 244. The result is aligned to four bytes, and the last two bytes are invalid).

4.36.24 Wi-Fi Channel State Information Configure

To use Wi-Fi CSI, the following steps need to be done.

- Select Wi-Fi CSI in menuconfig. Go to `Menuconfig > Components config > Wi-Fi > Wi-Fi CSI (Channel State Information)`.
- Set CSI receiving callback function by calling API *`esp_wifi_set_csi_rx_cb()`*.
- Configure CSI by calling API *`esp_wifi_set_csi_config()`*.
- Enable CSI by calling API *`esp_wifi_set_csi()`*.

The CSI receiving callback function runs from Wi-Fi task. So, do not do lengthy operations in the callback function. Instead, post necessary data to a queue and handle it from a lower priority task. Because station does not receive any packet when it is disconnected and only receives packets from AP when it is connected, it is suggested to enable sniffer mode to receive more CSI data by calling *`esp_wifi_set_promiscuous()`*.

4.36.25 Wi-Fi HT20/40

ESP32 supports Wi-Fi bandwidth HT20 or HT40 and does not support HT20/40 coexist. *`esp_wifi_set_bandwidth()`* can be used to change the default bandwidth of station or AP. The default bandwidth for ESP32 station and AP is HT40.

In station mode, the actual bandwidth is firstly negotiated during the Wi-Fi connection. It is HT40 only if both the station and the connected AP support HT40, otherwise it's HT20. If the bandwidth of connected AP is changes, the actual bandwidth is negotiated again without Wi-Fi disconnecting.

Similarly, in AP mode, the actual bandwidth is negotiated between AP and the stations that connect to the AP. It's HT40 if the AP and one of the stations support HT40, otherwise it's HT20.

In station/AP coexist mode, the station/AP can configure HT20/40 seperately. If both station and AP are negotiated to HT40, the HT40 channel should be the channel of station because the station always has higher priority than AP in ESP32. E.g. the configured bandwidth of AP is HT40, the configured primary channel is 6 and the configured secondary channel is 10. The station is connected to an router whose primary channel is 6 and secondary channel is 2, then the actual channel of AP is changed to primary 6 and secondary 2 automatically.

Theoretically the HT40 can gain better throughput because the maximum raw physicial (PHY) data rate for HT40 is 150Mbps while it's 72Mbps for HT20. However, if the device is used in some special environment, e.g. there are too many other Wi-Fi devices around the ESP32 device, the performance of HT40 may be degraded. So if the applications need to support same or similar scenarios, it's recommended that the bandwidth is always configured to HT20.

4.36.26 Wi-Fi QoS

ESP32 supports all the mandatory features required in WFA Wi-Fi QoS Certification.

Four ACs(Access Category) are defined in Wi-Fi specification, each AC has a its own priority to access the Wi-Fi channel. Moreover a map rule is defined to map the QoS priority of other protocol, such as 802.11D or TCP/IP precedence to Wi-Fi AC.

Below is a table describes how the IP Precedences are mapped to Wi-Fi ACs in ESP32, it also indicates whether the AMPDU is supported for this AC. The table is sorted with priority descending order, namely, the AC_VO has highest priority.

IP Precedence	Wi-Fi AC	Support AMPDU?
6, 7	AC_VO (Voice)	No
4, 5	AC_VI (Video)	Yes
3, 0	AC_BE (Best Effort)	Yes
1, 2	AC_BK (Background)	Yes

The application can make use of the QoS feature by configuring the IP precedence via socket option IP_TOS. Here is an example to make the socket to use VI queue:

```
const int ip_precedence_vi = 4;
const int ip_precedence_offset = 5;
int priority = (ip_precedence_vi << ip_precedence_offset);
setsockopt(socket_id, IPPROTO_IP, IP_TOS, &priority, sizeof(priority));
```

Theoretically the higher priority AC has better performance than the low priority AC, however, it's not always be true, here are some suggestions about how to use the Wi-Fi QoS:

- For some really important application traffic, can put it into AC_VO queue. Avoid sending big traffic via AC_VO queue. On one hand, the AC_VO queue doesn't support AMPDU and it can't get better performance than other queue if the traffic is big, on the other hand, it may impact the the management frames that also use AC_VO queue.
- Avoid using more than two different AMPDU supported precedences, e.g. socket A uses precedence 0, socket B uses precedence 1, socket C uses precedence 2, this is a bad design because it may need much more memory. To be detailed, the Wi-Fi driver may generate a Block Ack session for each precedence and it needs more memory if the Block Ack session is setup.

4.36.27 Wi-Fi AMSDU

ESP32 supports receiving and transmitting AMSDU.

4.36.28 Wi-Fi Fragment

supports Wi-Fi receiving fragment, but doesn't support Wi-Fi transmitting fragment.

4.36.29 WPS Enrollee

ESP32 supports WPS enrollee feature in Wi-Fi mode WIFI_MODE_STA or WIFI_MODE_APSTA. Currently ESP32 supports WPS enrollee type PBC and PIN.

4.36.30 Wi-Fi Buffer Usage

This section is only about the dynamic buffer configuration.

Why Buffer Configuration Is Important

In order to get a , high-performance system, we need to consider the memory usage/configuration very carefully, because:

- the available memory in ESP32 is limited.
- currently, the default type of buffer in LwIP and Wi-Fi drivers is "dynamic", **which means that both the LwIP and Wi-Fi share memory with the application**. Programmers should always keep this in mind; otherwise, they will face a memory issue, such as "running out of heap memory".
- it is very dangerous to run out of heap memory, as this will cause ESP32 an "undefined behavior". Thus, enough heap memory should be reserved for the application, so that it never runs out of it.

- the Wi-Fi throughput heavily depends on memory-related configurations, such as the TCP window size, Wi-Fi RX/TX dynamic buffer number, etc.
- the peak heap memory that the ESP32 LwIP/Wi-Fi may consume depends on a number of factors, such as the maximum TCP/UDP connections that the application may have, etc.
- the total memory that the application requires is also an important factor when considering memory configuration.

Due to these reasons, there is not a good-for-all application configuration. Rather, we have to consider memory configurations separately for every different application.

Dynamic vs. Static Buffer

The default type of buffer in Wi-Fi drivers is "dynamic". Most of the time the dynamic buffer can significantly save memory. However, it makes the application programming a little more difficult, because in this case the application needs to consider memory usage in Wi-Fi.

lwIP also allocates buffers at the TCP/IP layer, and this buffer allocation is also dynamic. See *lwIP documentation section about memory use and performance*.

Peak Wi-Fi Dynamic Buffer

The Wi-Fi driver supports several types of buffer (refer to *Wi-Fi Buffer Configure*). However, this section is about the usage of the dynamic Wi-Fi buffer only. The peak heap memory that Wi-Fi consumes is the **theoretically-maximum memory** that the Wi-Fi driver consumes. Generally, the peak memory depends on:

- the number of dynamic rx buffers that are configured: wifi_rx_dynamic_buf_num
- the number of dynamic tx buffers that are configured: wifi_tx_dynamic_buf_num
- the maximum packet size that the Wi-Fi driver can receive: wifi_rx_pkt_size_max
- the maximum packet size that the Wi-Fi driver can send: wifi_tx_pkt_size_max

So, the peak memory that the Wi-Fi driver consumes can be calculated with the following formula:

> wifi_dynamic_peek_memory = (wifi_rx_dynamic_buf_num * wifi_rx_pkt_size_max) + (wifi_tx_dynamic_buf_num * wifi_tx_pkt_size_max)

Generally, we do not need to care about the dynamic tx long buffers and dynamic tx long long buffers, because they are management frames which only have a small impact on the system.

4.36.31 How to improve Wi-Fi performance

The performance of ESP32 Wi-Fi is affected by many parameters, and there are mutual constraints between each parameter. A proper configuration can not only improve performance but also increase available memory for applications and improve stability.

In this section, we will briefly explain the operating mode of the Wi-Fi/LWIP protocol stack and explain the role of each parameter. We will give several recommended configuration ranks, user can choose the appropriate rank according to the usage scenario.

Protocol stack operation mode

The ESP32 protocol stack is divided into four layers: Application, LWIP, Wi-Fi, and Hardware.

- During receiving, hardware puts the received packet into DMA buffer, and then transfers it into the RX buffer of Wi-Fi, LWIP in turn for related protocol processing, and finally to the application layer. The Wi-Fi RX buffer and the LWIP RX buffer shares the same buffer by default. In other words, the Wi-Fi forwards the packet to LWIP by reference by default.
- During sending, the application copies the messages to be sent into the TX buffer of the LWIP layer for TCP/IP encapsulation. The messages will then be passed to the TX buffer of the Wi-Fi layer for MAC encapsulation and wait to be sent.

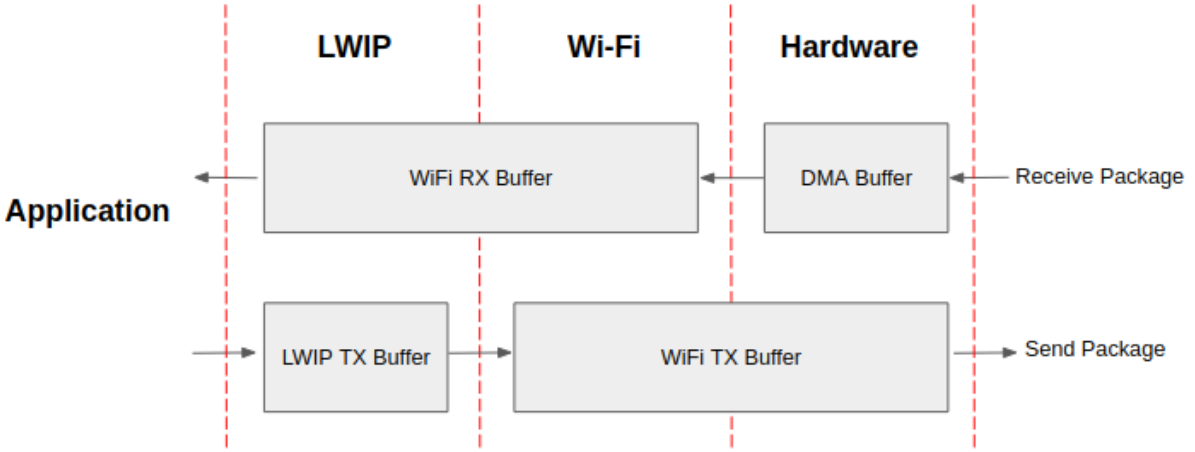

Fig. 59: ESP32 datapath

Parameters

Increasing the size or number of the buffers mentioned above properly can improve Wi-Fi performance. Meanwhile, it will reduce available memory to the application. The following is an introduction to the parameters that users need to configure:

RX direction:

- ***CONFIG_ESP32_WIFI_STATIC_RX_BUFFER_NUM*** This parameter indicates the number of DMA buffer at the hardware layer. Increasing this parameter will increase the sender ' s one-time receiving throughput, thereby improving the Wi-Fi protocol stack ability to handle burst traffic.
- ***CONFIG_ESP32_WIFI_DYNAMIC_RX_BUFFER_NUM*** This parameter indicates the number of RX buffer in the Wi-Fi layer. Increasing this parameter will improve the performance of packet reception. This parameter needs to match the RX buffer size of the LWIP layer.
- ***CONFIG_ESP32_WIFI_RX_BA_WIN*** This parameter indicates the size of the AMPDU BA Window at the receiving end. This parameter should be configured to the smaller value between twice of *CONFIG_ESP32_WIFI_STATIC_RX_BUFFER_NUM* and *CONFIG_ESP32_WIFI_DYNAMIC_RX_BUFFER_NUM*.
- ***CONFIG_LWIP_TCP_WND_DEFAULT*** This parameter represents the RX buffer size of the LWIP layer for each TCP stream. Its value should be configured to the value of WIFI_DYNAMIC_RX_BUFFER_NUM(KB) to reach a high and stable performance. Meanwhile, in case of multiple streams, this value needs to be reduced proportionally.

TX direction:

- ***CONFIG_ESP32_WIFI_STATIC_TX_BUFFER_NUM*** This parameter indicates the type of TX buffer, it is recommended to configure it as a dynamic buffer, which can make full use of memory.
- ***CONFIG_ESP32_WIFI_DYNAMIC_TX_BUFFER_NUM*** This parameter indicates the number of TX buffer on the Wi-Fi layer. Increasing this parameter will improve the performance of packet sending. The parameter value needs to match the TX buffer size of the LWIP layer.
- ***CONFIG_LWIP_TCP_SND_BUF_DEFAULT*** This parameter represents the TX buffer size of the LWIP layer for each TCP stream. Its value should be configured to the value of WIFI_DYNAMIC_TX_BUFFER_NUM(KB) to reach a high and stable performance. In case of multiple streams, this value needs to be reduced proportionally.

Throughput optimization by placing code in IRAM:

- ***CONFIG_ESP32_WIFI_IRAM_OPT*** If this option is enabled, some Wi-Fi functions are moved to IRAM, improving throughput. This increases IRAM usage by 15 kB.
- ***CONFIG_ESP32_WIFI_RX_IRAM_OPT*** If this option is enabled, some Wi-Fi RX functions are moved to IRAM, improving throughput. This increases IRAM usage by 16 kB.

- *CONFIG_LWIP_IRAM_OPTIMIZATION* If this option is enabled, some LWIP functions are moved to IRAM, improving throughput. This increases IRAM usage by 13 kB.

Note: The buffer size mentioned above is fixed as 1.6 KB.

How to configure parameters

ESP32's memory is shared by protocol stack and applications.

Here, we have given several configuration ranks. In most cases, the user should select a suitable rank for parameter configuration according to the size of the memory occupied by the application.

The parameters not mentioned in the following table should be set to the default.

Rank	Iperf	TX prior	High-performance	RX prior	De-fault	Memory saving	Mini-mum
Available memory(KB)	37.1	113.8	123.3	145.5	144.5	170.2	185.2
WIFI_STATIC_RX_BUFFER_NUM	16	6	6	6	6	6	4
WIFI_DYNAMIC_RX_BUFFER_NUM	64	16	24	34	20	12	8
WIFI_DYNAMIC_TX_BUFFER_NUM	64	28	24	18	20	12	8
WIFI_RX_BA_WIN	32	8	12	12	10	6	Disable
TCP_SND_BUF_DEFAULT(KB)	65	28	24	18	20	12	8
TCP_WND_DEFAULT(KB)	65	16	24	34	20	12	8
WIFI_IRAM_OPT	15	15	15	15	15	15	15
WIFI_RX_IRAM_OPT	16	16	16	16	16	16	16
LWIP_IRAM_OPTIMIZATION	13	13	13	13	13	13	13
TCP TX throughput (Mbit/s)	74.6	50.8	46.5	39.9	44.2	33.8	25.6
TCP RX throughput (Mbit/s)	63.6	35.5	42.3	48.5	40.5	30.1	27.8
UDP TX throughput (Mbit/s)	76.2	75.1	74.1	72.4	69.6	64.1	36.5
UDP RX throughput (Mbit/s)	83.1	66.3	75.1	75.6	73.1	65.3	54.7

Note: The test was performed with a single stream in a shielded box using an ASUS RT-N66U router. ESP32's CPU is dual core with 240 MHz, ESP32's flash is in QIO mode with 80 MHz.

Ranks:

- **Iperf rank** ESP32 extreme performance rank used to test extreme performance.
- **High-performance rank** The ESP32's high-performance configuration rank, suitable for scenarios that the application occupies less memory and has high-performance requirements. In this rank, users can choose to use the RX prior rank or the TX prior rank according to the usage scenario.
- **Default rank** ESP32's default configuration rank, the available memory, and performance are in balance.
- **Memory saving rank** This rank is suitable for scenarios where the application requires a large amount of memory, and the transceiver performance will be reduced in this rank.
- **Minimum rank** This is the minimum configuration rank of ESP32. The protocol stack only uses the necessary memory for running. It is suitable for scenarios that have no requirement for performance and the application requires lots of space.

Using PSRAM

PSRAM is generally used when the application takes up a lot of memory. In this mode, the *CONFIG_ESP32_WIFI_TX_BUFFER* is forced to be static. *CONFIG_ESP32_WIFI_STATIC_TX_BUFFER_NUM* indicates the number of DMA buffers at the hardware layer, increase this parameter can improve performance. The following are the recommended ranks for using PSRAM:

Rank	Iperf	Default	Memory saving	Minimum
Available memory (KB)	113.8	152.4	181.2	202.6
WIFI_STATIC_RX_BUFFER_NUM	16	8	4	2
WIFI_DYNAMIC_RX_BUFFER_NUM	128	128	128	128
WIFI_STATIC_TX_BUFFER_NUM	16	8	4	2
WIFI_RX_BA_WIN	16	16	8	Disable
TCP_SND_BUF_DEFAULT (KB)	65	65	65	65
TCP_WND_DEFAULT (KB)	65	65	65	65
WIFI_IRAM_OPT	15	15	15	0
WIFI_RX_IRAM_OPT	16	16	0	0
LWIP_IRAM_OPTIMIZATION	13	0	0	0
TCP TX throughput (Mbit/s)	37.5	31.7	21.7	14.6
TCP RX throughput (Mbit/s)	31.5	29.8	26.5	21.1
UDP TX throughput (Mbit/s)	69.1	31.5	27.1	24.1
UDP RX throughput (Mbit/s)	40.1	38.5	37.5	36.9

4.36.32 Wi-Fi Menuconfig

Wi-Fi Buffer Configure

If you are going to modify the default number or type of buffer, it would be helpful to also have an overview of how the buffer is allocated/freed in the data path. The following diagram shows this process in the TX direction:

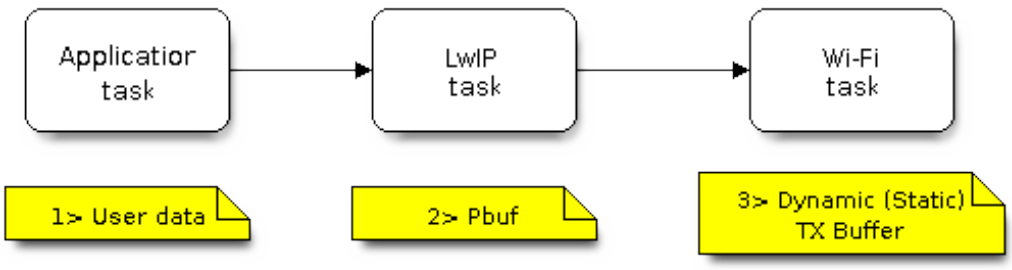

Fig. 60: TX Buffer Allocation

Description:

- The application allocates the data which needs to be sent out.
- The application calls TCPIP-/Socket-related APIs to send the user data. These APIs will allocate a PBUF used in LwIP, and make a copy of the user data.
- When LwIP calls a Wi-Fi API to send the PBUF, the Wi-Fi API will allocate a "Dynamic Tx Buffer" or "Static Tx Buffer", make a copy of the LwIP PBUF, and finally send the data.

The following diagram shows how buffer is allocated/freed in the RX direction:

Description:

- The Wi-Fi hardware receives a packet over the air and puts the packet content to the "Static Rx Buffer", which is also called "RX DMA Buffer".
- The Wi-Fi driver allocates a "Dynamic Rx Buffer", makes a copy of the "Static Rx Buffer", and returns the "Static Rx Buffer" to hardware.
- The Wi-Fi driver delivers the packet to the upper-layer (LwIP), and allocates a PBUF for holding the "Dynamic Rx Buffer".
- The application receives data from LwIP.

The diagram shows the configuration of the Wi-Fi internal buffer.

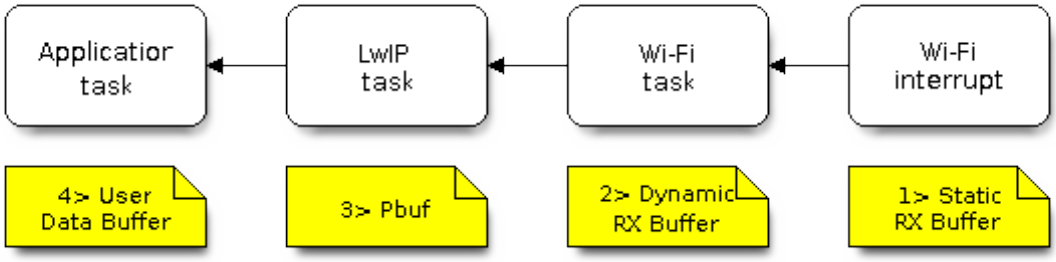

Fig. 61: RX Buffer Allocation

Buffer Type	Alloc Type	Default	Configurable	Description
Static RX Buffer (Hardware RX Buffer)	Static	10 * 1600 Bytes	Yes	This is a kind of DMA memory. It is initialized in *esp_wifi_init()* and freed in *esp_wifi_deinit()*. The 'Static Rx Buffer' forms the hardware receiving list. Upon receiving a frame over the air, hardware writes the frame into the buffer and raises an interrupt to the CPU. Then, the Wi-Fi driver reads the content from the buffer and returns the buffer back to the list. If the application want to reduce the the memory statically allocated by Wi-Fi, they can reduce this value from 10 to 6 to save 6400 Bytes memory. It's not recommended to reduce the configuration to a value less than 6 unless the AMPDU feature is disabled.
Dynamic RX Buffer	Dynamic	32	Yes	The buffer length is variable and it depends on the received frames' length. When the Wi-Fi driver receives a frame from the 'Hardware Rx Buffer', the 'Dynamic Rx Buffer' needs to be allocated from the heap. The number of the Dynamic Rx

Wi-Fi NVS Flash

If the Wi-Fi NVS flash is enabled, all Wi-Fi configurations set via the Wi-Fi APIs will be stored into flash, and the Wi-Fi driver will start up with these configurations next time it powers on/reboots. However, the application can choose to disable the Wi-Fi NVS flash if it does not need to store the configurations into persistent memory, or has its own persistent storage, or simply due to debugging reasons, etc.

Wi-Fi AMPDU

ESP32 supports both receiving and transmitting AMPDU, the AMPDU can greatly improve the Wi-Fi throughput.

Generally, the AMPDU should be enabled. Disabling AMPDU is usually for debugging purposes.

4.36.33 Troubleshooting

Please refer to a separate document with *Espressif Wireshark User Guide*.

Espressif Wireshark User Guide

1. Overview

1.1 What is Wireshark? Wireshark (originally named "Ethereal") is a network packet analyzer that captures network packets and displays the packet data as detailed as possible. It uses WinPcap as its interface to directly capture network traffic going through a network interface controller (NIC).

You could think of a network packet analyzer as a measuring device used to examine what is going on inside a network cable, just like a voltmeter is used by an electrician to examine what is going on inside an electric cable.

In the past, such tools were either very expensive, proprietary, or both. However, with the advent of Wireshark, all that has changed.

Wireshark is released under the terms of the GNU General Public License, which means you can use the software and the source code free of charge. It also allows you to modify and customize the source code.

Wireshark is, perhaps, one of the best open source packet analyzers available today.

1.2 Some Intended Purposes Here are some examples of how Wireshark is typically used:

- Network administrators use it to troubleshoot network problems.
- Network security engineers use it to examine security problems.
- Developers use it to debug protocol implementations.
- People use it to learn more about network protocol internals.

Beside these examples, Wireshark can be used for many other purposes.

1.3 Features The main features of Wireshark are as follows:

- Available for UNIX and Windows
- Captures live packet data from a network interface
- Displays packets along with detailed protocol information
- Opens/saves the captured packet data
- Imports/exports packets into a number of file formats, supported by other capture programs
- Advanced packet filtering
- Searches for packets based on multiple criteria
- Colorizes packets according to display filters

- Calculates statistics
- ···and a lot more!

1.4 Wireshark Can or Can't Do

- **Live capture from different network media**.
  Wireshark can capture traffic from different network media, including wireless LAN.
- **Import files from many other capture programs**.
  Wireshark can import data from a large number of file formats, supported by other capture programs.
- **Export files for many other capture programs**.
  Wireshark can export data into a large number of file formats, supported by other capture programs.
- **Numerous protocol dissectors**.
  Wireshark can dissect, or decode, a large number of protocols.
- **Wireshark is not an intrusion detection system**.
  It will not warn you if there are any suspicious activities on your network. However, if strange things happen, Wireshark might help you figure out what is really going on.
- **Wireshark does not manipulate processes on the network, it can only perform "measurements" within it**.
  Wireshark does not send packets on the network or influence it in any other way, except for resolving names (converting numerical address values into a human readable format), but even that can be disabled.

2. Where to Get Wireshark You can get Wireshark from the official website: https://www.wireshark.org/download.html

Wireshark can run on various operating systems. Please download the correct version according to the operating system you are using.

3. Step-by-step Guide **This demonstration uses Wireshark 2.2.6 on Linux.**

a) Start Wireshark

On Linux, you can run the shell script provided below. It starts Wireshark, then configures NIC and the channel for packet capture.

```
ifconfig $1 down
iwconfig $1 mode monitor
iwconfig $1 channel $2
ifconfig $1 up
Wireshark&
```

In the above script, the parameter `$1` represents NIC and `$2` represents channel. For example, `wlan0` in `./xxx.sh wlan0 6`, specifies the NIC for packet capture, and `6` identifies the channel of an AP or Soft-AP.

b) Run the Shell Script to Open Wireshark and Display Capture Interface

c) Select the Interface to Start Packet Capture

As the red markup shows in the picture above, many interfaces are available. The first one is a local NIC and the second one is a wireless NIC.

Please select the NIC according to your requirements. This document will use the wireless NIC to demonstrate packet capture.

Double click *wlan0* to start packet capture.

d) Set up Filters

Since all packets in the channel will be captured, and many of them are not needed, you have to set up filters to get the packets that you need.

Please find the picture below with the red markup, indicating where the filters should be set up.

Click *Filter*, the top left blue button in the picture below. The *display filter* dialogue box will appear.

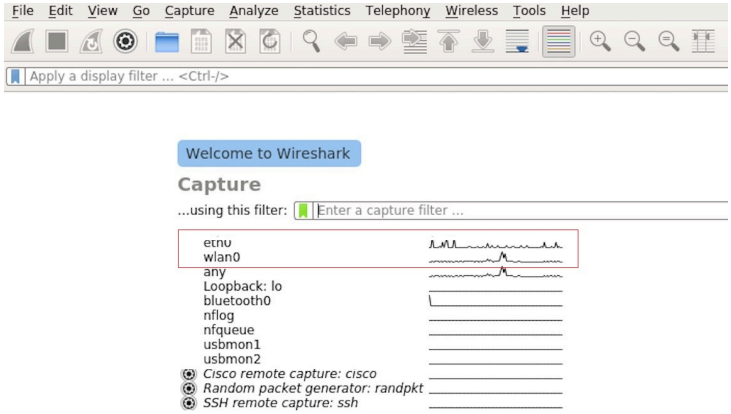

Fig. 62: Wireshark Capture Interface

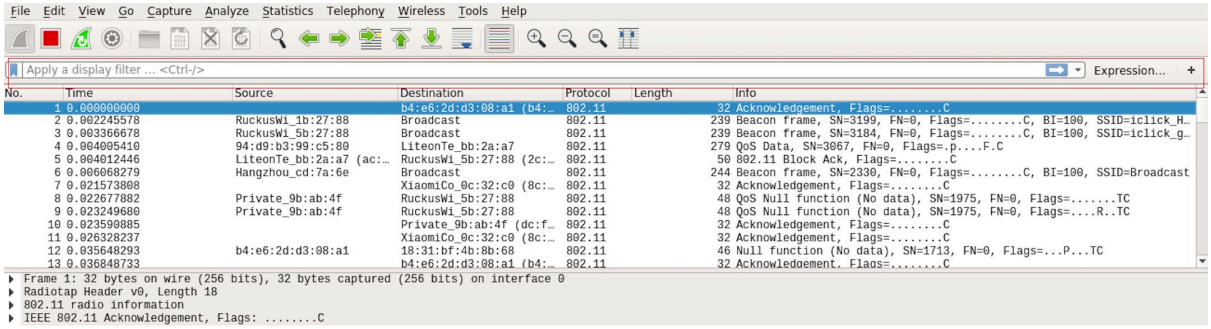

Fig. 63: Setting up Filters in Wireshark

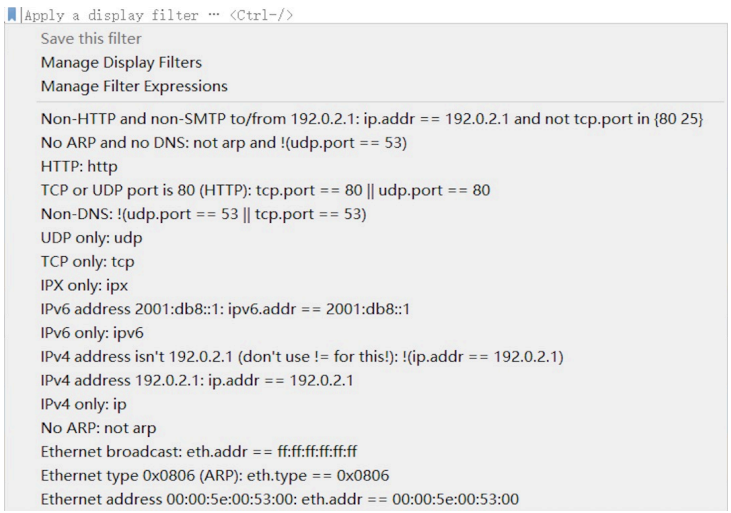

Fig. 64: *Display Filter* Dialogue Box

Click the *Expression* button to bring up the *Filter Expression* dialogue box and set the filter according to your requirements.

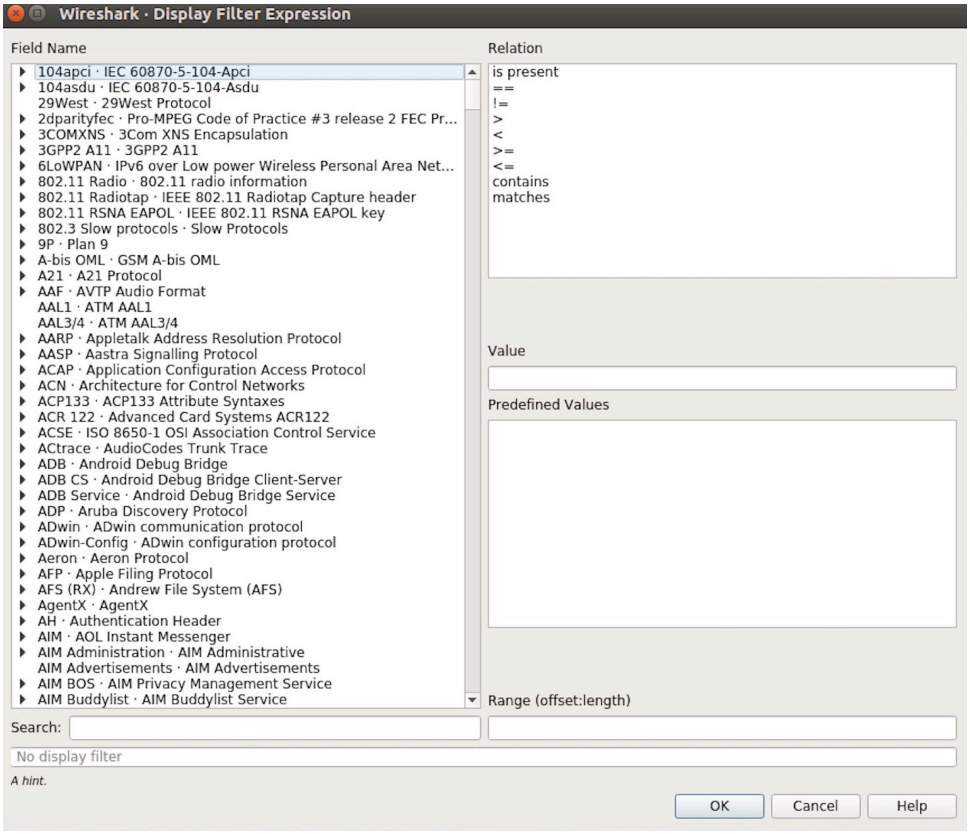

Fig. 65: *Filter Expression* Dialogue Box

The quickest way: enter the filters directly in the toolbar.

Fig. 66: Filter Toolbar

Click on this area to enter or modify the filters. If you enter a wrong or unfinished filter, the built-in syntax check turns the background red. As soon as the correct expression is entered, the background becomes green.

The previously entered filters are automatically saved. You can access them anytime by opening the drop down list.

For example, as shown in the picture below, enter two MAC addresses as the filters and click *Apply* (the blue arrow). In this case, only the packet data transmitted between these two MAC addresses will be captured.

Fig. 67: Example of MAC Addresses applied in the Filter Toolbar

e) Packet List

You can click any packet in the packet list and check the detailed information about it in the box below the list. For example, if you click the first packet, its details will appear in that box.

f) Stop/Start Packet Capture

As shown in the picture below, click the red button to stop capturing the current packet.

Click the top left blue button to start or resume packet capture.

g) Save the Current Packet

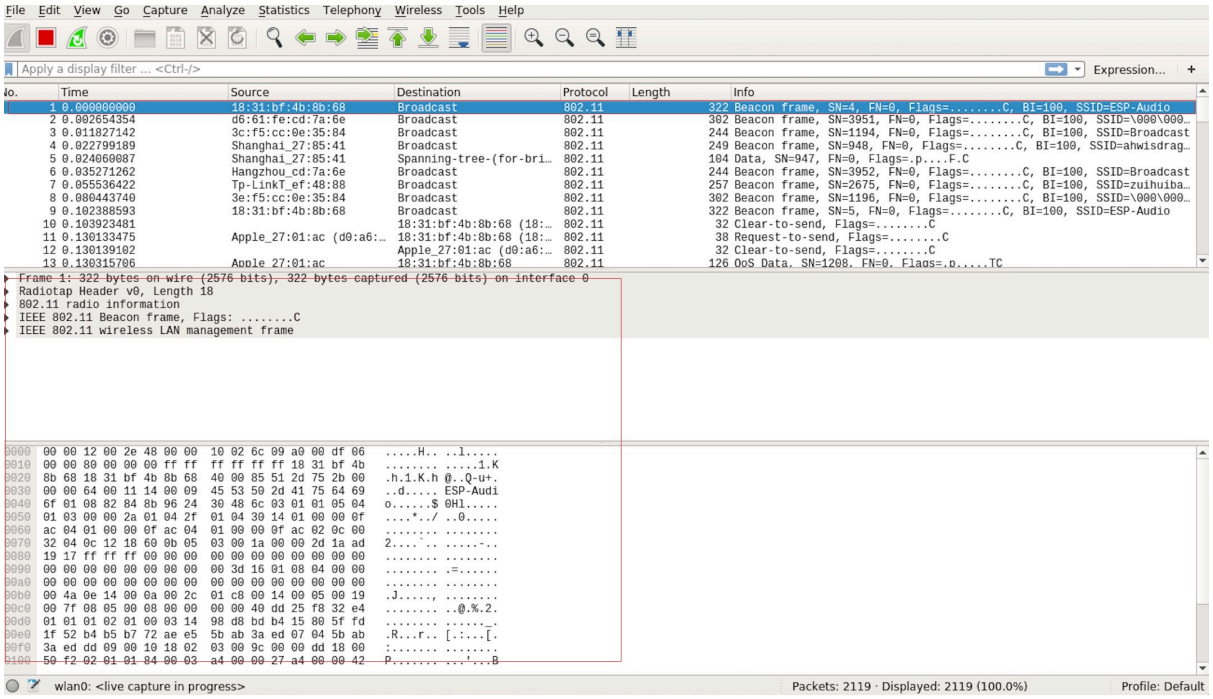

Fig. 68: Example of Packet List Details

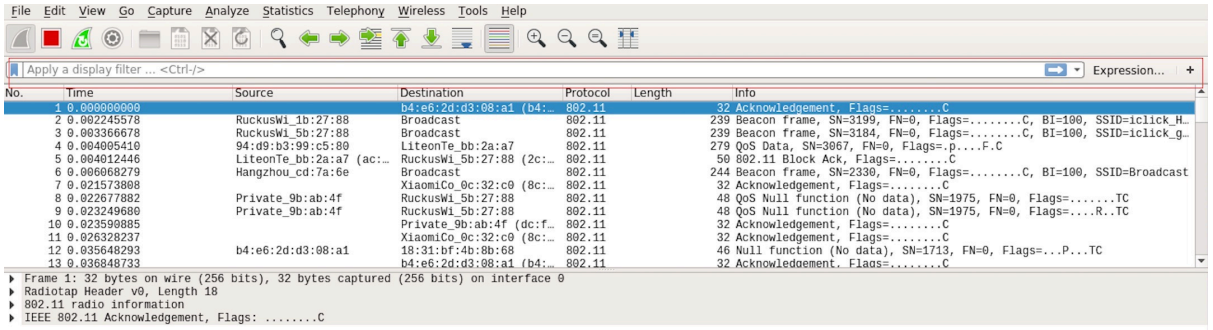

Fig. 69: Stopping Packet Capture

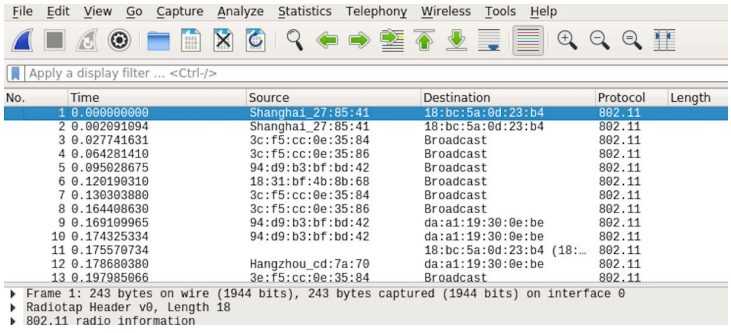

Fig. 70: Starting or Resuming the Packets Capture

On Linux, go to *File -> Export Packet Dissections -> As Plain Text File* to save the packet.

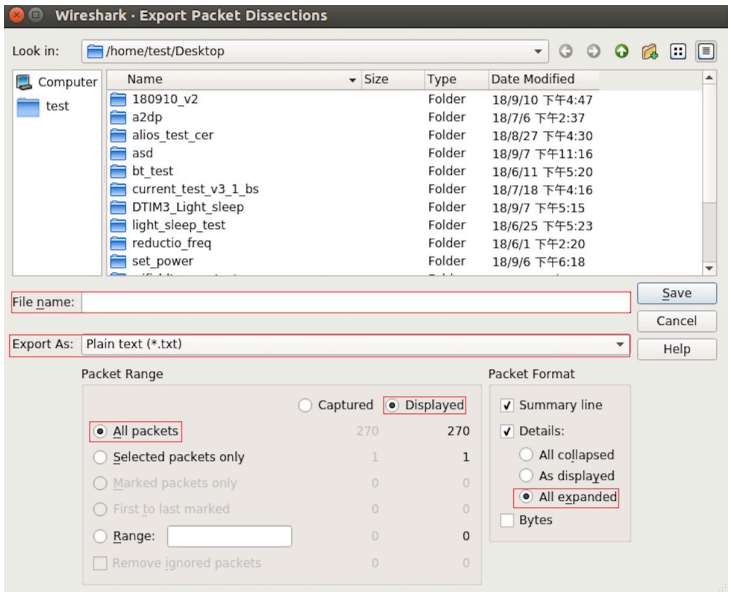

Fig. 71: Saving Captured Packets

Please note that *All packets*, *Displayed* and *All expanded* must be selected.

By default, Wireshark saves the captured packet in a libpcap file. You can also save the file in other formats, e.g. txt, to analyze it in other tools.

4.37 Wi-Fi Security

4.37.1 ESP32 Wi-Fi Security Features

- Support for Protected Management Frames (PMF)
- Support for WPA3-Personal

In addition to traditional security methods (WEP/WPA-TKIP/WPA2-CCMP), ESP32 Wi-Fi supports state-of-the-art security protocols, namely Protected Management Frames based on 802.11w standard and Wi-Fi Protected Access 3 (WPA3-Personal). Together, PMF and WPA3 provide better privacy and robustness against known attacks on traditional modes.

4.37.2 Protected Management Frames (PMF)

Introduction

In Wi-Fi, management frames such as beacons, probes, (de)authentication, (dis)association are used by non-AP stations to scan and connect to an AP. Unlike data frames, these frames are sent unencrypted. An attacker can use eavesdropping and packet injection to send spoofed (de)authentication/(dis)association frames at the right time, leading to the following attacks in case of unprotected management frame exchanges.

- DOS attack on one or all clients in the range of the attacker.
- Tearing down existing association on AP side by sending association request.
- Forcing a client to perform 4-way handshake again in case PSK is compromised in order to get PTK.
- Getting SSID of hidden network from association request.
- Launching man-in-the-middle attack by forcing clients to deauth from legitimate AP and associating to a rogue one.

PMF provides protection against these attacks by encrypting unicast management frames and providing integrity checks for broadcast management frames. These include deauthentication, disassociation and robust management frames. It also provides Secure Association (SA) teardown mechanism to prevent spoofed association/authentication frames from disconnecting already connected clients.

There are 3 types of PMF configuration modes on both Station and AP side -

- PMF Optional
- PMF Required
- PMF Disabled

Depending on the PMF configuration on Station and AP side, the resulting connection will behave differently. Below table summarises all possible outcomes.

STA Setting	AP Setting	Outcome
PMF Optional	PMF Optional/Required	Mgmt Frames Protected
PMF Optional	PMF Disabled	Mgmt Frames Not Protected
PMF Required	PMF Optional/Required	Mgmt Frames Protected
PMF Required	PMF Disabled	STA refuses Connection
PMF Disabled	PMF Optional/Disabled	Mgmt Frames Not Protected
PMF Disabled	PMF Required	AP refuses Connection

API & Usage

ESP32 supports PMF only in Station mode. Station defaults to PMF Optional mode and disabling PMF is not possible. For even higher security, PMF required mode can be enabled by setting the `required` flag in *pmf_cfg* while using the *esp_wifi_set_config()* API. This will result in Station only connecting to a PMF enabled AP and rejecting all other AP's. An example of this configuration is given below.

```
wifi_config_t wifi_config = {
    .sta = {
         .ssid = EXAMPLE_WIFI_SSID,
         .password = EXAMPLE_WIFI_PASSWORD,
         .pmf_cfg = {
            .required = true
         }
    }
};
```

Attention: `capable` flag in *pmf_cfg* is deprecated and set to true internally. This is to take the additional security benefit of PMF whenever possible.

4.37.3 WPA3-Personal

Introduction

Wi-Fi Protected Access-3 (WPA3) is a set of enhancements to Wi-Fi access security intended to replace the current WPA2 standard. It includes new features and capabilities that offer significantly better protection against different types of attacks. It improves upon WPA2-Personal in following ways:

- WPA3 uses Simultaneous Authentication of Equals (SAE), which is password-authenticated key agreement method based on Diffie-Hellman key exchange. Unlike WPA2, the technology is resistant to offline-dictionary attack, where the attacker attempts to determine shared password based on captured 4-way handshake without any further network interaction.
- Disallows outdated protocols such as TKIP, which is susceptible to simple attacks like MIC key recovery attack.
- Mandates Protected Management Frames (PMF), which provides protection for unicast and multicast robust management frames which include Disassoc and Deauth frames. This means that the attacker cannot disrupt

an established WPA3 session by sending forged Assoc frames to the AP or Deauth/Disassoc frames to the Station.
- Provides forward secrecy, which means the captured data cannot be decrypted even if password is compromised after data transmission.

Please refer to Security section of Wi-Fi Alliance' s official website for further details.

Setting up WPA3 with ESP32

In IDF Menuconfig under Wi-Fi component, a config option "Enable WPA3-Personal" is provided to Enable/Disable WPA3. By default it is kept enabled, if disabled ESP32 will not be able to establish a WPA3 connection. Currently, WPA3 is supported only in the Station mode. Additionally, since PMF is mandated by WPA3 protocol, PMF Mode should be set to either Optional or Required while setting WiFi config.

Refer to *Protected Management Frames (PMF)* on how to set this mode.

After these settings are done, Station is ready to use WPA3-Personal. Application developers need not worry about the underlying security mode of the AP. WPA3-Personal is now the highest supported protocol in terms of security, so it will be automatically selected for the connection whenever available. For example, if an AP is configured to be in WPA3 Transition Mode, where it will advertise as both WPA2 and WPA3 capable, Station will choose WPA3 for the connection with above settings. Note that Wi-Fi stack size requirement will increase 3kB when WPA3 is used.

Chapter 5

Libraries and Frameworks

5.1 Cloud Frameworks

ESP32 supports multiple cloud frameworks using agents built on top of ESP-IDF. Here are the pointers to various supported cloud frameworks' agents and examples:

5.1.1 ESP RainMaker

ESP RainMaker is a complete solution for accelerated AIoT development. ESP RainMaker on GitHub.

5.1.2 AWS IoT

https://github.com/espressif/esp-aws-iot is an open source repository for ESP32 based on Amazon Web Services' aws-iot-device-sdk-embedded-C.

5.1.3 Azure IoT

https://github.com/espressif/esp-azure is an open source repository for ESP32 based on Microsoft Azure' s azure-iot-sdk-c SDK.

5.1.4 Google IoT Core

https://github.com/espressif/esp-google-iot is an open source repository for ESP32 based on Google' s iot-device-sdk-embedded-c SDK.

5.1.5 Aliyun IoT

https://github.com/espressif/esp-aliyun is an open source repository for ESP32 based on Aliyun' s iotkit-embedded SDK.

5.1.6 Joylink IoT

https://github.com/espressif/esp-joylink is an open source repository for ESP32 based on Joylink' s joylink_dev_sdk SDK.

5.1.7 Tencent IoT

https://github.com/espressif/esp-welink is an open source repository for ESP32 based on Tencent's welink SDK.

5.1.8 Tencentyun IoT

https://github.com/espressif/esp-qcloud is an open source repository for ESP32 based on Tencentyun's qcloud-iot-sdk-embedded-c SDK.

5.1.9 Baidu IoT

https://github.com/espressif/esp-baidu-iot is an open source repository for ESP32 based on Baidu's iot-sdk-c SDK.

5.2 Espressif's Frameworks

Here you will find a collection of the official Espressif libraries and frameworks.

5.2.1 Espressif Audio Development Framework

The ESP-ADF is a comprehensive framework for audio applications including:

- CODEC's HAL
- Music Players and Recorders
- Audio Processing
- Bluetooth Speakers
- Internet Radios
- Hands-free devices
- Speech Recognition

This framework is available at GitHub: ESP-ADF.

5.2.2 ESP-CSI

ESP-CSI is an experimental implementation that uses the Wi-Fi Channel State Information to detect the presence of a human body.

See ESP-CSI project for more information about it.

5.2.3 Espressif DSP Library

The library provides algorithms optimized specifically for digital signal processing applications. This library supports:

- Matrix multiplication
- Dot product
- FFT (Fast Fourier Transform)
- IIR (Infinite Impulse Response)
- FIR (Finite Impulse Response)
- Vector math operations

This library is available here: ESP-DSP library.

5.2.4 ESP-WIFI-MESH Development Framework

This framework is based on the ESP-WIFI-MESH protocol with the following features:

- Fast network configuration
- Stable upgrade
- Efficient debugging
- LAN control
- Various application demos

ESP-MDF.

5.2.5 ESP-WHO

The ESP-WHO is a face detection and recognition framework using the ESP32 and camera. To know more about the project, see ESP-WHO on GitHub.

5.2.6 ESP RainMaker

ESP RainMaker is a complete solution for accelerated AIoT development. Using ESP RainMaker, you can create AIoT devices from the firmware to the integration with voice-assistant, phone apps and cloud backend.

ESP RainMaker on GitHub.

5.2.7 ESP-IoT-Solution

ESP-IoT-Solution contains commonly used device drivers and code frameworks when developing IoT systems. The device drivers and code frameworks within the ESP-IoT-Solution are organized as separate components, allowing them to be easily integrated into an ESP-IDF project.

ESP-IoT-Solution includes:

- Device drivers for sensors, display, audio, GUI, input, actuators, etc.
- Framework and documentation for low power, security, storage, etc.
- Guide for Espressif open source solutions from practical application point.

ESP-IoT-Solution on GitHub.

Chapter 6

Contributions Guide

We welcome contributions to the esp-idf project!

6.1 How to Contribute

Contributions to esp-idf - fixing bugs, adding features, adding documentation - are welcome. We accept contributions via Github Pull Requests.

6.2 Before Contributing

Before sending us a Pull Request, please consider this list of points:

- Is the contribution entirely your own work, or already licensed under an Apache License 2.0 compatible Open Source License? If not then we unfortunately cannot accept it.
- Does any new code conform to the esp-idf *Style Guide*?
- Have you installed the *pre-commit hook* for esp-idf project?
- Does the code documentation follow requirements in *Documenting Code*?
- Is the code adequately commented for people to understand how it is structured?
- Is there documentation or examples that go with code contributions? There are additional suggestions for writing good examples in examples readme.
- Are comments and documentation written in clear English, with no spelling or grammar errors?
- Example contributions are also welcome. Please check the *Creating Examples* guide for these.
- If the contribution contains multiple commits, are they grouped together into logical changes (one major change per pull request)? Are any commits with names like "fixed typo" squashed into previous commits?
- If you're unsure about any of these points, please open the Pull Request anyhow and then ask us for feedback.

6.3 Pull Request Process

After you open the Pull Request, there will probably be some discussion in the comments field of the request itself.

Once the Pull Request is ready to merge, it will first be merged into our internal git system for in-house automated testing.

If this process passes, it will be merged onto the public github repository.

6.4 Legal Part

Before a contribution can be accepted, you will need to sign our *Contributor Agreement*. You will be prompted for this automatically as part of the Pull Request process.

6.5 Related Documents

6.5.1 Espressif IoT Development Framework Style Guide

About This Guide

Purpose of this style guide is to encourage use of common coding practices within the ESP-IDF.

Style guide is a set of rules which are aimed to help create readable, maintainable, and robust code. By writing code which looks the same way across the code base we help others read and comprehend the code. By using same conventions for spaces and newlines we reduce chances that future changes will produce huge unreadable diffs. By following common patterns for module structure and by using language features consistently we help others understand code behavior.

We try to keep rules simple enough, which means that they can not cover all potential cases. In some cases one has to bend these simple rules to achieve readability, maintainability, or robustness.

When doing modifications to third-party code used in ESP-IDF, follow the way that particular project is written. That will help propose useful changes for merging into upstream project.

C Code Formatting

Naming

- Any variable or function which is only used in a single source file should be declared `static`.
- Public names (non-static variables and functions) should be namespaced with a per-component or per-unit prefix, to avoid naming collisions. ie `esp_vfs_register()` or `esp_console_run()`. Starting the prefix with `esp_` for Espressif-specific names is optional, but should be consistent with any other names in the same component.
- Static variables should be prefixed with `s_` for easy identification. For example, `static bool s_invert`.
- Avoid unnecessary abbreviations (ie shortening `data` to `dat`), unless the resulting name would otherwise be very long.

Indentation Use 4 spaces for each indentation level. Don't use tabs for indentation. Configure the editor to emit 4 spaces each time you press tab key.

Vertical Space Place one empty line between functions. Don't begin or end a function with an empty line.

```
void function1()
{
    do_one_thing();
    do_another_thing();
                                    // INCORRECT, don't place empty line here
}
                                    // place empty line here
void function2()
{
                                    // INCORRECT, don't use an empty line here
    int var = 0;
    while (var < SOME_CONSTANT) {
        do_stuff(&var);
```

(continues on next page)

(continued from previous page)

```
    }
}
```

The maximum line length is 120 characters as long as it doesn't seriously affect the readability.

Horizontal Space Always add single space after conditional and loop keywords:

```
if (condition) {     // correct
    // ...
}

switch (n) {         // correct
    case 0:
        // ...
}

for(int i = 0; i < CONST; ++i) {     // INCORRECT
    // ...
}
```

Add single space around binary operators. No space is necessary for unary operators. It is okay to drop space around multiply and divide operators:

```
const int y = y0 + (x - x0) * (y1 - y0) / (x1 - x0);     // correct

const int y = y0 + (x - x0)*(y1 - y0)/(x1 - x0);         // also okay

int y_cur = -y;                                          // correct
++y_cur;

const int y = y0+(x-x0)*(y1-y0)/(x1-x0);                 // INCORRECT
```

No space is necessary around `.` and `->` operators.

Sometimes adding horizontal space within a line can help make code more readable. For example, you can add space to align function arguments:

```
esp_rom_gpio_connect_in_signal(PIN_CAM_D6,   I2S0I_DATA_IN14_IDX, false);
esp_rom_gpio_connect_in_signal(PIN_CAM_D7,   I2S0I_DATA_IN15_IDX, false);
esp_rom_gpio_connect_in_signal(PIN_CAM_HREF, I2S0I_H_ENABLE_IDX,  false);
esp_rom_gpio_connect_in_signal(PIN_CAM_PCLK, I2S0I_DATA_IN15_IDX, false);
```

Note however that if someone goes to add new line with a longer identifier as first argument (e.g. `PIN_CAM_VSYNC`), it will not fit. So other lines would have to be realigned, adding meaningless changes to the commit.

Therefore, use horizontal alignment sparingly, especially if you expect new lines to be added to the list later.

Never use TAB characters for horizontal alignment.

Never add trailing whitespace at the end of the line.

Braces

- Function definition should have a brace on a separate line:

```
// This is correct:
void function(int arg)
{

}
```

(continues on next page)

(continued from previous page)

```
// NOT like this:
void function(int arg) {

}
```

- Within a function, place opening brace on the same line with conditional and loop statements:

```
if (condition) {
    do_one();
} else if (other_condition) {
    do_two();
}
```

Comments Use `//` for single line comments. For multi-line comments it is okay to use either `//` on each line or a `/* */` block.

Although not directly related to formatting, here are a few notes about using comments effectively.

- Don't use single comments to disable some functionality:

```
void init_something()
{
    setup_dma();
    // load_resources();                // WHY is this thing commented, asks␣
↪the reader?
    start_timer();
}
```

- If some code is no longer required, remove it completely. If you need it you can always look it up in git history of this file. If you disable some call because of temporary reasons, with an intention to restore it in the future, add explanation on the adjacent line:

```
void init_something()
{
    setup_dma();
    // TODO: we should load resources here, but loader is not fully integrated␣
↪yet.
    // load_resources();
    start_timer();
}
```

- Same goes for `#if 0 ... #endif` blocks. Remove code block completely if it is not used. Otherwise, add comment explaining why the block is disabled. Don't use `#if 0 ... #endif` or comments to store code snippets which you may need in the future.
- Don't add trivial comments about authorship and change date. You can always look up who modified any given line using git. E.g. this comment adds clutter to the code without adding any useful information:

```
void init_something()
{
    setup_dma();
    // XXX add 2016-09-01
    init_dma_list();
    fill_dma_item(0);
    // end XXX add
    start_timer();
}
```

Line Endings Commits should only contain files with LF (Unix style) endings.

Windows users can configure git to check out CRLF (Windows style) endings locally and commit LF endings by setting the `core.autocrlf` setting. *Github has a document about setting this option <github-line-endings>*. However

because MSYS2 uses Unix-style line endings, it is often easier to configure your text editor to use LF (Unix style) endings when editing ESP-IDF source files.

If you accidentally have some commits in your branch that add LF endings, you can convert them to Unix by running this command in an MSYS2 or Unix terminal (change directory to the IDF working directory and check the correct branch is currently checked out, beforehand):

```
git rebase --exec 'git diff-tree --no-commit-id --name-only -r HEAD | xargs␣
↪dos2unix && git commit -a --amend --no-edit --allow-empty' master
```

(Note that this line rebases on master, change the branch name at the end to rebase on another branch.)

For updating a single commit, it's possible to run `dos2unix FILENAME` and then run `git commit --amend`

Formatting Your Code You can use `astyle` program to format your code according to the above recommendations.

If you are writing a file from scratch, or doing a complete rewrite, feel free to re-format the entire file. If you are changing a small portion of file, don't re-format the code you didn't change. This will help others when they review your changes.

To re-format a file, run:

```
tools/format.sh components/my_component/file.c
```

Type Definitions Should be snake_case, ending with _t suffix:

```
typedef int signed_32_bit_t;
```

Enum Enums should be defined through the *typedef* and be namespaced:

```
typedef enum
{
    MODULE_FOO_ONE,
    MODULE_FOO_TWO,
    MODULE_FOO_THREE
} module_foo_t;
```

Assertions The standard C `assert()` function, defined in `assert.h` should be used to check conditions that should be true in source code. In the default configuration, an assert condition that returns `false` or 0 will call `abort()` and trigger a *Fatal Error*.

`assert()` should only be used to detect unrecoverable errors due to a serious internal logic bug or corruption, where it's not possible for the program to continue. For recoverable errors, including errors that are possible due to invalid external input, an *error value should be returned*.

Note: When asserting a value of type `esp_err_t``is equal to ``ESP_OK`, use the *ESP_ERROR_CHECK macro* instead of an `assert()`.

It's possible to configure ESP-IDF projects with assertions disabled (see *CONFIG_COMPILER_OPTIMIZATION_ASSERTION_LEVEL*). Therefore, functions called in an `assert()` statement should not have side-effects.

It's also necessary to use particular techniques to avoid "variable set but not used" warnings when assertions are disabled, due to code patterns such as:

```
int res = do_something();
assert(res == 0);
```

Once the `assert` is optimized out, the `res` value is unused and the compiler will warn about this. However the function `do_something()` must still be called, even if assertions are disabled.

When the variable is declared and initialized in a single statement, a good strategy is to cast it to `void` on a new line. The compiler will not produce a warning, and the variable can still be optimized out of the final binary:

```
int res = do_something();
assert(res == 0);
(void)res;
```

If the variable is declared separately, for example if it is used for multiple assertions, then it can be declared with the GCC attribute `__attribute__((unused))`. The compiler will not produce any unused variable warnings, but the variable can still be optimized out:

```
int res __attribute__((unused));

res = do_something();
assert(res == 0);

res = do_something_else();
assert(res != 0);
```

Header file guards

All public facing header files should have preprocessor guards. A pragma is preferred:

```
#pragma once
```

over the following pattern:

```
#ifndef FILE_NAME_H
#define FILE_NAME_H
...
#endif // FILE_NAME_H
```

In addition to guard macros, all C header files should have `extern "C"` guards to allow the header to be used from C++ code. Note that the following order should be used: `pragma once`, then any `#include` statements, then `extern "C"` guards:

```
#pragma once

#include <stdint.h>

#ifdef __cplusplus
extern "C" {
#endif

/* declarations go here */

#ifdef __cplusplus
}
#endif
```

Include statements

When writing `#include` statements, try to maintain the following order:

- C standard library headers.
- Other POSIX standard headers and common extensions to them (such as `sys/queue.h`.)
- Common IDF headers (`esp_log.h`, `esp_system.h`, `esp_timer.h`, `esp_sleep.h`, etc.)
- Headers of other components, such as FreeRTOS.
- Public headers of the current component.
- Private headers.

Use angle brackets for C standard library headers and other POSIX headers (`#include <stdio.h>`).

Use double quotes for all other headers (`#include "esp_log.h"`).

C++ Code Formatting

The same rules as for C apply. Where they are not enough, apply the following rules.

File Naming C++ Header files have the extension `.hpp`. C++ source files have the extension `.cpp`. The latter is important for the compiler to distinguish them from normal C source files.

Naming

- **Class and struct** names shall be written in `CamelCase` with a capital letter as beginning. Member variables and methods shall be in `snake_case`.
- **Namespaces** shall be in lower `snake_case`.
- **Templates** are specified in the line above the function declaration.
- Interfaces in terms of Object-Oriented Programming shall be named without the suffix `...Interface`. Later, this makes it easier to extract interfaces from normal classes and vice versa without making a breaking change.

Member Order in Classes In order of precedence:

- First put the public members, then the protected, then private ones. Omit public, protected or private sections without any members.
- First put constructors/destructors, then member functions, then member variables.

For example:

```
class ForExample {
public:
    // first constructors, then default constructor, then destructor
    ForExample(double example_factor_arg);
    ForExample();
    ~ForExample();

    // then remaining pubic methods
    set_example_factor(double example_factor_arg);

    // then public member variables
    uint32_t public_data_member;

private:
    // first private methods
    void internal_method();

    // then private member variables
    double example_factor;
};
```

Spacing

- Don't indent inside namespaces.
- Put `public`, `protected` and `private` labels at the same indentation level as the corresponding `class` label.

Simple Example

```
// file spaceship.h
#ifndef SPACESHIP_H_
#define SPACESHIP_H_
#include <cstdlib>

namespace spaceships {

class SpaceShip {
public:
    SpaceShip(size_t crew);
    size_t get_crew_size() const;

private:
    const size_t crew;
};

class SpaceShuttle : public SpaceShip {
public:
    SpaceShuttle();
};

class Sojuz : public SpaceShip {
public:
    Sojuz();
};

template <typename T>
class CargoShip {
public:
    CargoShip(const T &cargo);

private:
    T cargo;
};

} // namespace spaceships

#endif // SPACESHIP_H_

// file spaceship.cpp
#include "spaceship.h"

namespace spaceships {

// Putting the curly braces in the same line for constructors is OK if it only␣
↪initializes
// values in the initializer list
SpaceShip::SpaceShip(size_t crew) : crew(crew) { }

size_t SpaceShip::get_crew_size() const
{
    return crew;
}
```

(continues on next page)

(continued from previous page)

```
SpaceShuttle::SpaceShuttle() : SpaceShip(7)
{
    // doing further initialization
}

Sojuz::Sojuz() : SpaceShip(3)
{
    // doing further initialization
}

template <typename T>
CargoShip<T>::CargoShip(const T &cargo) : cargo(cargo) { }

} // namespace spaceships
```

CMake Code Style

- Indent with four spaces.
- Maximum line length 120 characters. When splitting lines, try to focus on readability where possible (for example, by pairing up keyword/argument pairs on individual lines).
- Don't put anything in the optional parentheses after `endforeach()`, `endif()`, etc.
- Use lowercase (`with_underscores`) for command, function, and macro names.
- For locally scoped variables, use lowercase (`with_underscores`).
- For globally scoped variables, use uppercase (`WITH_UNDERSCORES`).
- Otherwise follow the defaults of the cmake-lint project.

Configuring the Code Style for a Project Using EditorConfig

EditorConfig helps developers define and maintain consistent coding styles between different editors and IDEs. The EditorConfig project consists of a file format for defining coding styles and a collection of text editor plugins that enable editors to read the file format and adhere to defined styles. EditorConfig files are easily readable and they work nicely with version control systems.

For more information, see EditorConfig Website.

Documenting Code

Please see the guide here: *Documenting Code*.

Structure

To be written.

Language Features

To be written.

6.5.2 Install pre-commit Hook for ESP-IDF Project

Required Dependency

Python 3.6.1 or above. This is our recommendation python version for IDF developers.

If you still have python versions not compatible, please do not install pre-commit hook and update your python versions.

Install pre-commit

Run `pip install pre-commit`

Install pre-commit hook

1. Go to the IDF Project Directory
2. Run `pre-commit install --allow-missing-config`. Install hook by this approach will let you commit successfully even in branches without the `.pre-commit-config.yaml`
3. pre-commit hook will run automatically when you're running `git commit` command

Uninstall pre-commit

Run `pre-commit uninstall`

What's More?

For detailed usage, please refer to the documentation of pre-commit.

Common Problems For Windows Users

`/usr/bin/env: python: Permission denied.`

> If you're in Git Bash or MSYS terminal, please check the python executable location by run `which python`.
>
> If the executable is under `~/AppData/Local/Microsoft/WindowsApps/`, then it's a link to Windows AppStore, not a real one.
>
> Please install python manually and update this in your `PATH` environment variable.

Your %USERPROFILE% contains non-ASCII characters

> `pre-commit` may fail when initializing an environment for a particular hook when the path of `pre-commit`'s cache contains non-ASCII characters. The solution is to set `PRE_COMMIT_HOME` to a path containing only standard characters before running pre-commit.
>
> - CMD: `set PRE_COMMIT_HOME=C:\somepath\pre-commit`
> - PowerShell: `$Env:PRE_COMMIT_HOME = "C:\somepath\pre-commit"`
> - git bash: `export PRE_COMMIT_HOME="/c/somepath/pre-commit"`

6.5.3 Documenting Code

The purpose of this description is to provide quick summary on documentation style used in espressif/esp-idf repository and how to add new documentation.

Introduction

When documenting code for this repository, please follow Doxygen style. You are doing it by inserting special commands, for instance `@param`, into standard comments blocks, for example:

```
/**
 * @param ratio this is oxygen to air ratio
 */
```

Doxygen is phrasing the code, extracting the commands together with subsequent text, and building documentation out of it.

Typical comment block, that contains documentation of a function, looks like below.

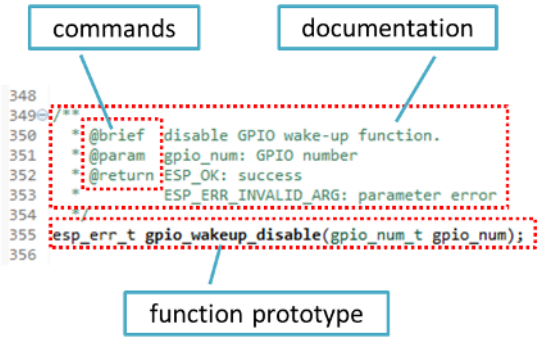

Doxygen supports couple of formatting styles. It also gives you great flexibility on level of details to include in documentation. To get familiar with available features, please check data rich and very well organized Doxygen Manual.

Why we need it?

The ultimate goal is to ensure that all the code is consistently documented, so we can use tools like Sphinx and Breathe to aid preparation and automatic updates of API documentation when the code changes.

With these tools the above piece of code renders like below:

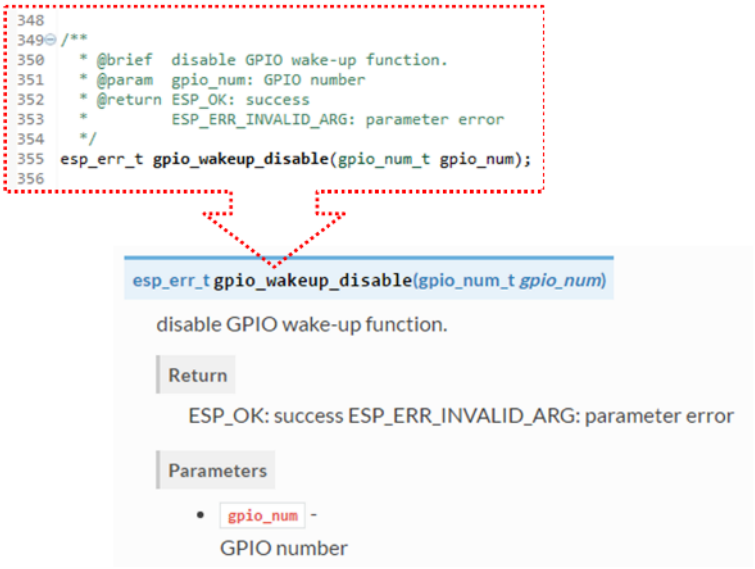

Go for it!

When writing code for this repository, please follow guidelines below.

1. Document all building blocks of code: functions, structs, typedefs, enums, macros, etc. Provide enough information about purpose, functionality and limitations of documented items, as you would like to see them documented when reading the code by others.
2. Documentation of function should describe what this function does. If it accepts input parameters and returns some value, all of them should be explained.
3. Do not add a data type before parameter or any other characters besides spaces. All spaces and line breaks are compressed into a single space. If you like to break a line, then break it twice.

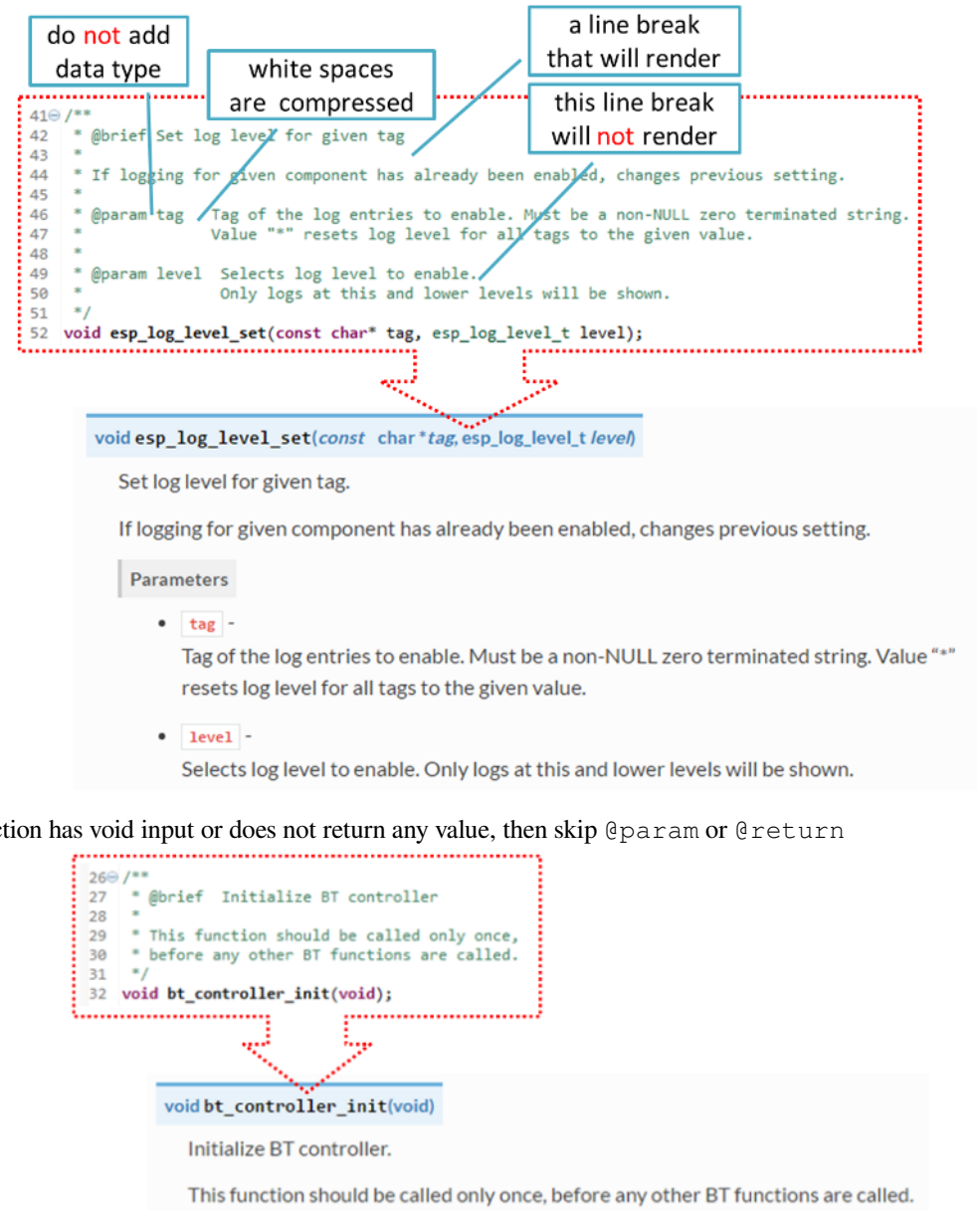

4. If function has void input or does not return any value, then skip `@param` or `@return`

5. When documenting a `define` as well as members of a `struct` or `enum`, place specific comment like below after each member.

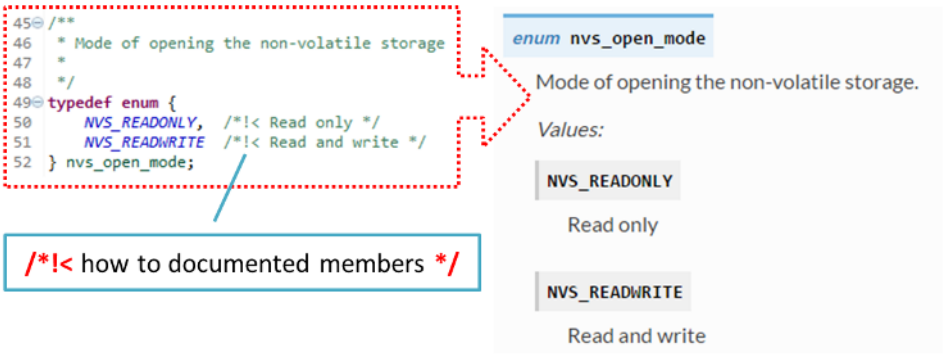

6. To provide well formatted lists, break the line after command (like `@return` in example below).

```
*
* @return
*     - ESP_OK if erase operation was successful
*     - ESP_ERR_NVS_INVALID_HANDLE if handle has been closed or is NULL
*     - ESP_ERR_NVS_READ_ONLY if handle was opened as read only
*     - ESP_ERR_NVS_NOT_FOUND if the requested key doesn't exist
*     - other error codes from the underlying storage driver
*
```

7. Overview of functionality of documented header file, or group of files that make a library, should be placed in a separate `README.rst` file of the same directory. If this directory contains header files for different APIs, then the file name should be `apiname-readme.rst`.

Go one extra mile

Here are a couple of tips on how you can make your documentation even better and more useful to the reader and writer.

When writing codes, please follow the guidelines below:

1. Add code snippets to illustrate implementation. To do so, enclose snippet using `@code{c}` and `@endcode` commands.

```
*
* @code{c}
* // Example of using nvs_get_i32:
* int32_t max_buffer_size = 4096; // default value
* esp_err_t err = nvs_get_i32(my_handle, "max_buffer_size", &max_buffer_size);
* assert(err == ESP_OK || err == ESP_ERR_NVS_NOT_FOUND);
* // if ESP_ERR_NVS_NOT_FOUND was returned, max_buffer_size will still
* // have its default value.
* @endcode
*
```

   The code snippet should be enclosed in a comment block of the function that it illustrates.
2. To highlight some important information use command `@attention` or `@note`.

```
*
* @attention
*     1. This API only impact WIFI_MODE_STA or WIFI_MODE_APSTA mode
*     2. If the ESP32 is connected to an AP, call esp_wifi_disconnect to␣
↪disconnect.
*
```

   Above example also shows how to use a numbered list.
3. To provide common description to a group of similar functions, enclose them using `/**@{*/` and `/**@}*/` markup commands:

```
/**@{*/
/**
 * @brief common description of similar functions
 *
 */
void  first_similar_function (void);
void second_similar_function (void);
/**@}*/
```

For practical example see nvs_flash/include/nvs.h.

4. You may want to go even further and skip some code like repetitive defines or enumerations. In such case, enclose the code within `/** @cond */` and `/** @endcond */` commands. Example of such implementation is provided in driver/include/driver/gpio.h.
5. Use markdown to make your documentation even more readable. You will add headers, links, tables and more.

```
*
* [ESP32 Technical Reference Manual](https://www.espressif.com/sites/default/
↪files/documentation/esp32_technical_reference_manual_en.pdf)
*
```

Note: Code snippets, notes, links, etc. will not make it to the documentation, if not enclosed in a comment block associated with one of documented objects.

6. Prepare one or more complete code examples together with description. Place description to a separate file `README.md` in specific folder of examples directory.

Standardize Document Format

When it comes to text, please follow guidelines below to provide well formatted Markdown (.md) or reST (.rst) documents.

1. Please ensure that one paragraph is written in one line. Don't break lines like below. Breaking lines to enhance readability is only suitable for writing codes. To make the text easier to read, it is recommended to place an empty line to separate the paragraph.

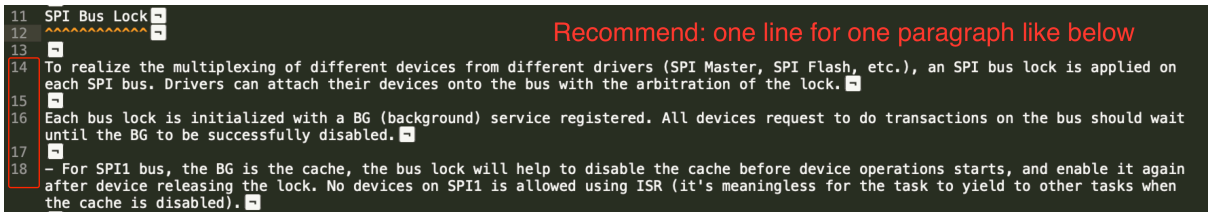

Fig. 1: One line for one paragraph (click to enlarge)

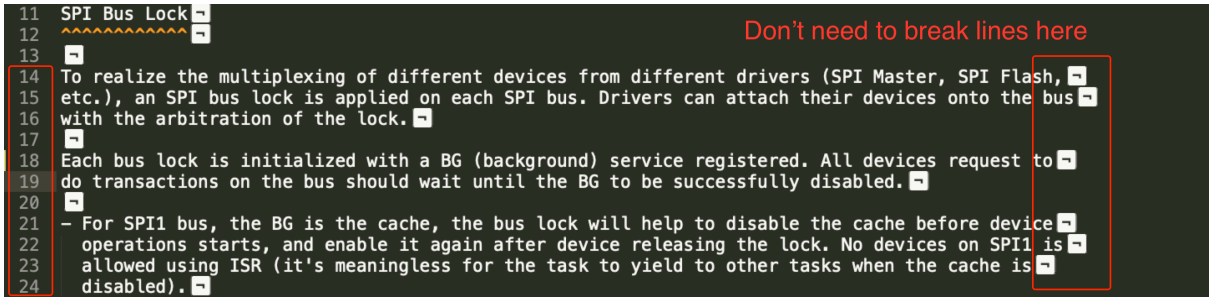

Fig. 2: No line breaks within the same paragraph (click to enlarge)

2. Please make the line number of CN and EN documents consistent like below. The benefit of this approach is that it can save time for both writers and translators. When non-bilingual writers need to update text, they only need to update the same line in the corresponding CN or EN document. For translators, if documents are updated in English, then translators can quickly locate where to update in the corresponding CN document later. Besides, by comparing the total number of lines in EN and CN documents, you can quickly find out whether the CN version lags behind the EN version.

Fig. 3: Keep the line number for EN and CN documents consistent (click to enlarge)

Building Documentation

The documentation is built with the *esp-docs* Python package, which is a wrapper around Sphinx

To install it simply do:

```
pip install esp-docs
```

After a successful install then the documentation can be built from the docs folder with:

```
build-docs build
```

or for specific target and language with:

```
build-docs -t esp32 -l en build
```

For more in-depth documentation about *esp-docs* features please see the *esp-doc* documentation.

Wrap up

We love good code that is doing cool things. We love it even better, if it is well documented, so we can quickly make it run and also do the cool things.

Go ahead, contribute your code and documentation!

Related Documents

- *API Documentation Template*

6.5.4 Creating Examples

Each ESP-IDF example is a complete project that someone else can copy and adapt the code to solve their own problem. Examples should demonstrate ESP-IDF functionality, while keeping this purpose in mind.

Structure

- The `main` directory should contain a source file named `(something)_example_main.c` with the main functionality.
- If the example has additional functionality, split it logically into separate C or C++ source files under `main` and place a corresponding header file in the same directory.
- If the example has a lot of additional functionality, consider adding a `components` directory to the example project and make some example-specific components with library functionality. Only do this if the components are specific to the example, if they're generic or common functionality then they should be added to ESP-IDF itself.
- The example should have a `README.md` file. Use the template example README and adapt it for your particular example.
- Examples should have an `example_test.py` file for running an automated example test. If submitting a GitHub Pull Request which includes an example, it's OK not to include this file initially. The details can be discussed as part of the Pull Request.

General Guidelines

Example code should follow the *Espressif IoT Development Framework Style Guide*.

Checklist

Checklist before submitting a new example:

- Example project name (in `Makefile` and `README.md`) uses the word "example". Use "example" instead of "demo", "test" or similar words.
- Example does one distinct thing. If the example does more than one thing at a time, split it into two or more examples.
- Example has a `README.md` file which is similar to the template example README .
- Functions and variables in the example are named according to *naming section of the style guide*. (For non-static names which are only specific to the example's source files, you can use `example` or something similar as a prefix.)
- All code in the example is well structured and commented.
- Any unnecessary code (old debugging logs, commented-out code, etc.) is removed from the example.
- Options in the example (like network names, addresses, etc) are not hard-coded. Use configuration items if possible, or otherwise declare macros or constants)
- Configuration items are provided in a `KConfig.projbuild` file with a menu named "Example Configuration". See existing example projects to see how this is done.
- All original example code has a license header saying it is "in the public domain / CC0", and a warranty disclaimer clause. Alternatively, the example is licensed under Apache License 2.0. See existing examples for headers to adapt from.
- Any adapted or third party example code has the original license header on it. This code must be licensed compatible with Apache License 2.0.

6.5.5 API Documentation Template

Note: *INSTRUCTIONS*

1. Use this file (docs/en/api-reference/template.rst) as a template to document API.
2. Change the file name to the name of the header file that represents documented API.
3. Include respective files with descriptions from the API folder using `..include::`
   - README.rst
   - example.rst
   - ...
4. Optionally provide description right in this file.
5. Once done, remove all instructions like this one and any superfluous headers.

Overview

Note: *INSTRUCTIONS*

1. Provide overview where and how this API may be used.
2. Where applicable include code snippets to illustrate functionality of particular functions.
3. To distinguish between sections, use the following heading levels:
   - # with overline, for parts
   - * with overline, for chapters
   - =, for sections
   - -, for subsections
   - ^, for subsubsections
   - ", for paragraphs

Application Example

Note: *INSTRUCTIONS*

1. Prepare one or more practical examples to demonstrate functionality of this API.
2. Each example should follow pattern of projects located in `esp-idf/examples/` folder.
3. Place example in this folder complete with `README.md` file.
4. Provide overview of demonstrated functionality in `README.md`.
5. With good overview reader should be able to understand what example does without opening the source code.
6. Depending on complexity of example, break down description of code into parts and provide overview of functionality of each part.
7. Include flow diagram and screenshots of application output if applicable.
8. Finally add in this section synopsis of each example together with link to respective folder in `esp-idf/examples/`.

API Reference

Note: *INSTRUCTIONS*

1. This repository provides for automatic update of API reference documentation using *code markup retrieved by Doxygen from header files*.

1. Update is done on each documentation build by invoking Sphinx extension *:esp_extensions/run_doxygen.py* for all header files listed in the `INPUT` statement of docs/doxygen/Doxyfile.

1. Each line of the `INPUT` statement (other than a comment that begins with `##`) contains a path to header file `*.h` that will be used to generate corresponding `*.inc` files:

```
##
## Wi-Fi - API Reference
##
../components/esp32/include/esp_wifi.h \
../components/esp32/include/esp_smartconfig.h \
```

1. When the headers are expanded, any macros defined by default in `sdkconfig.h` as well as any macros defined in SOC-specific `include/soc/*_caps.h` headers will be expanded. This allows the headers to include/exclude material based on the `IDF_TARGET` value.

1. The `*.inc` files contain formatted reference of API members generated automatically on each documentation build. All `*.inc` files are placed in Sphinx `_build` directory. To see directives generated for e.g. `esp_wifi.h`, run `python gen-dxd.py esp32/include/esp_wifi.h`.

1. To show contents of `*.inc` file in documentation, include it as follows:

   ```
   .. include-build-file:: inc/esp_wifi.inc
   ```

   For example see docs/en/api-reference/network/esp_wifi.rst

1. Optionally, rather that using `*.inc` files, you may want to describe API in you own way. See docs/en/api-reference/storage/fatfs.rst for example.
   Below is the list of common `.. doxygen...::` directives:
   - Functions - `.. doxygenfunction:: name_of_function`
   - Unions - `.. doxygenunion:: name_of_union`
   - Structures - `.. doxygenstruct:: name_of_structure` together with `:members:`
   - Macros - `.. doxygendefine:: name_of_define`
   - Type Definitions - `.. doxygentypedef:: name_of_type`
   - Enumerations - `.. doxygenenum:: name_of_enumeration`

   See Breathe documentation for additional information.
   To provide a link to header file, use the *link custom role* directive as follows:

   ```
   * :component_file:`path_to/header_file.h`
   ```

1. In any case, to generate API reference, the file docs/doxygen/Doxyfile should be updated with paths to `*.h` headers that are being documented.

1. When changes are committed and documentation is build, check how this section has been rendered. *Correct annotations* in respective header files, if required.

6.5.6 Contributor Agreement

Individual Contributor Non-Exclusive License Agreement

including the Traditional Patent License OPTION

Thank you for your interest in contributing to Espressif IoT Development Framework (esp-idf) ("We" or "Us").

The purpose of this contributor agreement ("Agreement") is to clarify and document the rights granted by contributors to Us. To make this document effective, please follow the instructions at CONTRIBUTING.rst

1. DEFINITIONS **"You"** means the Individual Copyright owner who submits a Contribution to Us. If You are an employee and submit the Contribution as part of your employment, You have had Your employer approve this Agreement or sign the Entity version of this document.

"Contribution" means any original work of authorship (software and/or documentation) including any modifications or additions to an existing work, Submitted by You to Us, in which You own the Copyright. If You do not own the Copyright in the entire work of authorship, please contact Us at marius.vikhammer@espressif.com.

"Copyright" means all rights protecting works of authorship owned or controlled by You, including copyright, moral and neighboring rights, as appropriate, for the full term of their existence including any extensions by You.

"Material" means the software or documentation made available by Us to third parties. When this Agreement covers more than one software project, the Material means the software or documentation to which the Contribution was Submitted. After You Submit the Contribution, it may be included in the Material.

"Submit" means any form of physical, electronic, or written communication sent to Us, including but not limited to electronic mailing lists, source code control systems, and issue tracking systems that are managed by, or on behalf of, Us, but excluding communication that is conspicuously marked or otherwise designated in writing by You as "Not a Contribution."

"Submission Date" means the date You Submit a Contribution to Us.

"Documentation" means any non-software portion of a Contribution.

2. LICENSE GRANT 2.1 Copyright License to Us

Subject to the terms and conditions of this Agreement, You hereby grant to Us a worldwide, royalty-free, NON-exclusive, perpetual and irrevocable license, with the right to transfer an unlimited number of non-exclusive licenses or to grant sublicenses to third parties, under the Copyright covering the Contribution to use the Contribution by all means, including, but not limited to:

- to publish the Contribution,
- to modify the Contribution, to prepare derivative works based upon or containing the Contribution and to combine the Contribution with other software code,
- to reproduce the Contribution in original or modified form,
- to distribute, to make the Contribution available to the public, display and publicly perform the Contribution in original or modified form.

2.2 Moral Rights remain unaffected to the extent they are recognized and not waivable by applicable law. Notwithstanding, You may add your name in the header of the source code files of Your Contribution and We will respect this attribution when using Your Contribution.

3. PATENTS 3.1 Patent License

Subject to the terms and conditions of this Agreement You hereby grant to us a worldwide, royalty-free, non-exclusive, perpetual and irrevocable (except as stated in Section 3.2) patent license, with the right to transfer an unlimited number of non-exclusive licenses or to grant sublicenses to third parties, to make, have made, use, sell, offer for sale, import and otherwise transfer the Contribution and the Contribution in combination with the Material (and portions of such combination). This license applies to all patents owned or controlled by You, whether already acquired or hereafter acquired, that would be infringed by making, having made, using, selling, offering for sale, importing or otherwise transferring of Your Contribution(s) alone or by combination of Your Contribution(s) with the Material.

3.2 Revocation of Patent License

You reserve the right to revoke the patent license stated in section 3.1 if we make any infringement claim that is targeted at your Contribution and not asserted for a Defensive Purpose. An assertion of claims of the Patents shall be considered for a "Defensive Purpose" if the claims are asserted against an entity that has filed, maintained, threatened, or voluntarily participated in a patent infringement lawsuit against Us or any of Our licensees.

4. DISCLAIMER THE CONTRIBUTION IS PROVIDED "AS IS". MORE PARTICULARLY, ALL EXPRESS OR IMPLIED WARRANTIES INCLUDING, WITHOUT LIMITATION, ANY IMPLIED WARRANTY OF MERCHANTABILITY, FITNESS FOR A PARTICULAR PURPOSE AND NON-INFRINGEMENT ARE EXPRESSLY DISCLAIMED BY YOU TO US AND BY US TO YOU. TO THE EXTENT THAT ANY SUCH WARRANTIES CANNOT BE DISCLAIMED, SUCH WARRANTY IS LIMITED IN DURATION TO THE MINIMUM PERIOD PERMITTED BY LAW.

5. Consequential Damage Waiver TO THE MAXIMUM EXTENT PERMITTED BY APPLICABLE LAW, IN NO EVENT WILL YOU OR US BE LIABLE FOR ANY LOSS OF PROFITS, LOSS OF ANTICIPATED SAVINGS, LOSS OF DATA, INDIRECT, SPECIAL, INCIDENTAL, CONSEQUENTIAL AND EXEMPLARY DAMAGES ARISING OUT OF THIS AGREEMENT REGARDLESS OF THE LEGAL OR EQUITABLE THEORY (CONTRACT, TORT OR OTHERWISE) UPON WHICH THE CLAIM IS BASED.

6. Approximation of Disclaimer and Damage Waiver IF THE DISCLAIMER AND DAMAGE WAIVER MENTIONED IN SECTION 4 AND SECTION 5 CANNOT BE GIVEN LEGAL EFFECT UNDER APPLICABLE LOCAL LAW, REVIEWING COURTS SHALL APPLY LOCAL LAW THAT MOST CLOSELY APPROXIMATES AN ABSOLUTE WAIVER OF ALL CIVIL LIABILITY IN CONNECTION WITH THE CONTRIBUTION.

7. Term 7.1 This Agreement shall come into effect upon Your acceptance of the terms and conditions.

7.2 In the event of a termination of this Agreement Sections 4, 5, 6, 7 and 8 shall survive such termination and shall remain in full force thereafter. For the avoidance of doubt, Contributions that are already licensed under a free and open source license at the date of the termination shall remain in full force after the termination of this Agreement.

8. Miscellaneous 8.1 This Agreement and all disputes, claims, actions, suits or other proceedings arising out of this agreement or relating in any way to it shall be governed by the laws of People ' s Republic of China excluding its private international law provisions.

8.2 This Agreement sets out the entire agreement between You and Us for Your Contributions to Us and overrides all other agreements or understandings.

8.3 If any provision of this Agreement is found void and unenforceable, such provision will be replaced to the extent possible with a provision that comes closest to the meaning of the original provision and that is enforceable. The terms and conditions set forth in this Agreement shall apply notwithstanding any failure of essential purpose of this Agreement or any limited remedy to the maximum extent possible under law.

8.4 You agree to notify Us of any facts or circumstances of which you become aware that would make this Agreement inaccurate in any respect.

You

Date:	
Name:	
Title:	
Address:	

Us

Date:	
Name:	
Title:	
Address:	

Chapter 7

ESP-IDF Versions

The ESP-IDF GitHub repository is updated regularly, especially the master branch where new development takes place.

For production use, there are also stable releases available.

7.1 Releases

The documentation for the current stable release version can always be found at this URL:

https://docs.espressif.com/projects/esp-idf/en/stable/

Documentation for the latest version (master branch) can always be found at this URL:

https://docs.espressif.com/projects/esp-idf/en/latest/

The full history of releases can be found on the GitHub repository Releases page. There you can find release notes, links to each version of the documentation, and instructions for obtaining each version.

7.2 Which Version Should I Start With?

- For production purposes, use the current stable version. Stable versions have been manually tested, and are updated with "bugfix releases" which fix bugs without changing other functionality (see *Versioning Scheme* for more details). Every stable release version can be found on the Releases page.
- For prototyping, experimentation or for developing new ESP-IDF features, use the latest version (master branch in Git). The latest version in the master branch has all the latest features and has passed automated testing, but has not been completely manually tested ("bleeding edge").
- If a required feature is not yet available in a stable release, but you do not want to use the master branch, it is possible to check out a pre-release version or a release branch. It is recommended to start from a stable version and then follow the instructions for *Updating to a Pre-Release Version* or *Updating to a Release Branch*.

See *Updating ESP-IDF* if you already have a local copy of ESP-IDF and wish to update it.

7.3 Versioning Scheme

ESP-IDF uses Semantic Versioning. This means that:

- Major Releases, like `v3.0`, add new functionality and may change functionality. This includes removing deprecated functionality.

If updating to a new major release (for example, from `v2.1` to `v3.0`), some of your project's code may need updating and functionality may need to be re-tested. The release notes on the Releases page include lists of Breaking Changes to refer to.

- Minor Releases like `v3.1` add new functionality and fix bugs but will not change or remove documented functionality, or make incompatible changes to public APIs.
  If updating to a new minor release (for example, from `v3.0` to `v3.1`), your project's code does not require updating, but you should re-test your project. Pay particular attention to the items mentioned in the release notes on the Releases page.
- Bugfix Releases like `v3.0.1` only fix bugs and do not add new functionality.
  If updating to a new bugfix release (for example, from `v3.0` to `v3.0.1`), you do not need to change any code in your project, and you only need to re-test the functionality directly related to bugs listed in the release notes on the Releases page.

7.4 Support Periods

Each ESP-IDF major and minor release version has an associated support period. After this period, the release is End of Life and no longer supported.

The ESP-IDF Support Period Policy explains this in detail, and describes how the support periods for each release are determined.

Each release on the Releases page includes information about the support period for that particular release.

As a general guideline:

- If starting a new project, use the latest stable release.
- If you have a GitHub account, click the "Watch" button in the top-right of the Releases page and choose "Releases only". GitHub will notify you whenever a new release is available. Whenever a bug fix release is available for the version you are using, plan to update to it.
- If possible, periodically update the project to a new major or minor ESP-IDF version (for example, once a year.) The update process should be straightforward for Minor updates, but may require some planning and checking of the release notes for Major updates.
- Always plan to update to a newer release before the release you are using becomes End of Life.

Each ESP-IDF major and minor release (V4.1, V4.2, etc) is supported for 30 months after the initial stable release date.

Supported means that the ESP-IDF team will continue to apply bug fixes, security fixes, etc to the release branch on GitHub, and periodically make new bugfix releases as needed.

Support period is divided into "Service" and "Maintenance" period:

Period	Duration	Recommended for new projects?
Service	12 months	Yes
Maintenance	18 months	No

During the Service period, bugfixes releases are more frequent. In some cases, support for new features may be added during the Service period (this is reserved for features which are needed to meet particular regulatory requirements or standards for new products, and which carry a very low risk of introducing regressions.)

During the Maintenance period, the version is still supported but only bugfixes for high severity issues or security issues will be applied.

Using an "In Service" version is recommended when starting a new project.

Users are encouraged to upgrade all projects to a newer ESP-IDF release before the support period finishes and the release becomes End of Life (EOL). It is our policy to not continue fixing bugs in End of Life releases.

Pre-release versions (betas, previews, *-rc* and *-dev* versions, etc) are not covered by any support period. Sometimes a particular feature is marked as "Preview" in a release, which means it is also not covered by the support period.

The ESP-IDF Programming Guide has information about the different versions of ESP-IDF (major, minor, bugfix, etc).

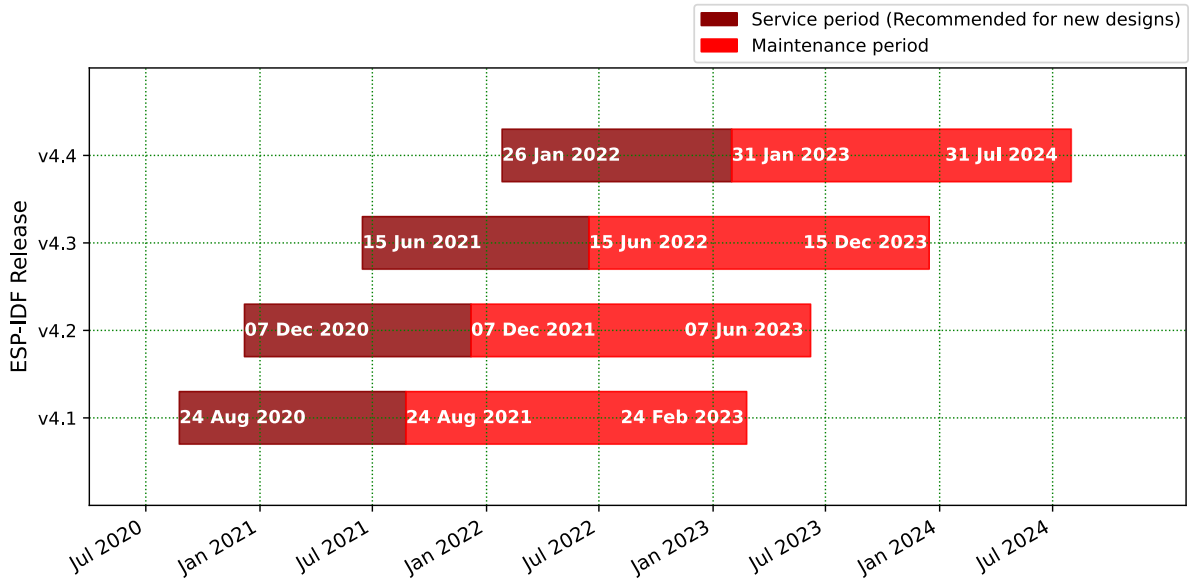

7.5 Checking the Current Version

The local ESP-IDF version can be checked by using idf.py:

```
idf.py --version
```

The ESP-IDF version is also compiled into the firmware and can be accessed (as a string) via the macro `IDF_VER`. The default ESP-IDF bootloader will print the version on boot (the version information is not always updated if the code in the GitHub repo is updated, it only changes if there is a clean build or if that particular source file is recompiled).

If writing code that needs to support multiple ESP-IDF versions, the version can be checked at compile time using *compile-time macros*.

Examples of ESP-IDF versions:

Version String	Meaning
`v3.2-dev-306-gbeb3611ca`	Master branch pre-release. - `v3.2-dev` - in development for version 3.2. - `306` - number of commits after v3.2 development started. - `beb3611ca` - commit identifier.
`v3.0.2`	Stable release, tagged `v3.0.2`.
`v3.1-beta1-75-g346d6b0ea`	Beta version in development (on a *release branch*). - `v3.1-beta1` - pre-release tag. - `75` - number of commits after the pre-release beta tag was assigned. - `346d6b0ea` - commit identifier.
`v3.0.1-dirty`	Stable release, tagged `v3.0.1`. - `dirty` means that there are modifications in the local ESP-IDF directory.

7.6 Git Workflow

The development (Git) workflow of the Espressif ESP-IDF team is as follows:

- New work is always added on the master branch (latest version) first. The ESP-IDF version on `master` is always tagged with `-dev` (for "in development"), for example `v3.1-dev`.
- Changes are first added to an internal Git repository for code review and testing but are pushed to GitHub after automated testing passes.
- When a new version (developed on `master`) becomes feature complete and "beta" quality, a new branch is made for the release, for example `release/v3.1`. A pre-release tag is also created, for example `v3.1-beta1`. You can see a full list of branches and a list of tags on GitHub. Beta pre-releases have release notes which may include a significant number of Known Issues.
- As testing of the beta version progresses, bug fixes will be added to both the `master` branch and the release branch. New features for the next release may start being added to `master` at the same time.
- Once testing is nearly complete a new release candidate is tagged on the release branch, for example `v3.1-rc1`. This is still a pre-release version.
- If no more significant bugs are found or reported, then the final Major or Minor Version is tagged, for example `v3.1`. This version appears on the Releases page.
- As bugs are reported in released versions, the fixes will continue to be committed to the same release branch.
- Regular bugfix releases are made from the same release branch. After manual testing is complete, a bugfix release is tagged (i.e. `v3.1.1`) and appears on the Releases page.

7.7 Updating ESP-IDF

Updating ESP-IDF depends on which version(s) you wish to follow:

- *Updating to Stable Release* is recommended for production use.

- *Updating to Master Branch* is recommended for the latest features, development use, and testing.
- *Updating to a Release Branch* is a compromise between the first two.

Note: These guides assume that you already have a local copy of ESP-IDF cloned. To get one, check Step 2 in the *Getting Started* guide for any ESP-IDF version.

7.7.1 Updating to Stable Release

To update to a new ESP-IDF release (recommended for production use), this is the process to follow:

- Check the Releases page regularly for new releases.
- When a bugfix release for the version you are using is released (for example, if using `v3.0.1` and `v3.0.2` is released), check out the new bugfix version into the existing ESP-IDF directory:

```
cd $IDF_PATH
git fetch
git checkout vX.Y.Z
git submodule update --init --recursive
```

- When major or minor updates are released, check the Release Notes on the releases page and decide if you want to update or to stay with your current release. Updating is via the same Git commands shown above.

Note: If you installed the stable release via zip file instead of using git, it might not be possible to update versions using the commands. In this case, update by downloading a new zip file and replacing the entire `IDF_PATH` directory with its contents.

7.7.2 Updating to a Pre-Release Version

It is also possible to `git checkout` a tag corresponding to a pre-release version or release candidate, the process is the same as *Updating to Stable Release*.

Pre-release tags are not always found on the Releases page. Consult the list of tags on GitHub for a full list. Caveats for using a pre-release are similar to *Updating to a Release Branch*.

7.7.3 Updating to Master Branch

Note: Using Master branch means living "on the bleeding edge" with the latest ESP-IDF code.

To use the latest version on the ESP-IDF master branch, this is the process to follow:

- Check out the master branch locally:

```
cd $IDF_PATH
git checkout master
git pull
git submodule update --init --recursive
```

- Periodically, re-run `git pull` to pull the latest version of master. Note that you may need to change your project or report bugs after updating your master branch.
- To switch from master to a release branch or stable version, run `git checkout` as shown in the other sections.

Important: It is strongly recommended to regularly run `git pull` and then `git submodule update --init --recursive` so a local copy of master does not get too old. Arbitrary old master branch revisions are effectively unsupportable "snapshots" that may have undocumented bugs. For a semi-stable version, try *Updating to a Release Branch* instead.

7.7.4 Updating to a Release Branch

In terms of stability, using a release branch is part-way between using the master branch and only using stable releases. A release branch is always beta quality or better, and receives bug fixes before they appear in each stable release.

You can find a list of branches on GitHub.

For example, to follow the branch for ESP-IDF v3.1, including any bugfixes for future releases like `v3.1.1`, etc:

```
cd $IDF_PATH
git fetch
git checkout release/v3.1
git pull
git submodule update --init --recursive
```

Each time you `git pull` this branch, ESP-IDF will be updated with fixes for this release.

Note: There is no dedicated documentation for release branches. It is recommended to use the documentation for the closest version to the branch which is currently checked out.

Chapter 8

Resources

8.1 PlatformIO

- *What is PlatformIO?*
- *Installation*
- *Configuration*
- *Tutorials*
- *Project Examples*
- *Next Steps*

8.1.1 What is PlatformIO?

PlatformIO is a cross-platform embedded development environment with out-of-the-box support for ESP-IDF.

Since ESP-IDF support within PlatformIO is not maintained by the Espressif team, please report any issues with PlatformIO directly to its developers in the official PlatformIO repositories.

A detailed overview of the PlatformIO ecosystem and its philosophy can be found in the official PlatformIO documentation.

8.1.2 Installation

- PlatformIO IDE is a toolset for embedded C/C++ development available on Windows, macOS and Linux platforms
- PlatformIO Core (CLI) is a command-line tool that consists of multi-platform build system, platform and library managers and other integration components. It can be used with a variety of code development environments and allows integration with cloud platforms and web services

8.1.3 Configuration

Please go through the official PlatformIO configuration guide for ESP-IDF.

8.1.4 Tutorials

- ESP-IDF and ESP32-DevKitC: debugging, unit testing, project analysis

8.1.5 Project Examples

Please check ESP-IDF page in the official PlatformIO documentation

8.1.6 Next Steps

Here are some useful links for exploring the PlatformIO ecosystem:

- Learn more about integrations with other IDEs/Text Editors
- Get help from PlatformIO community

8.2 Useful Links

- The esp32.com forum is a place to ask questions and find community resources.
- Check the Issues section on GitHub if you find a bug or have a feature request. Please check existing Issues before opening a new one.
- A comprehensive collection of solutions, practical applications, components and drivers based on ESP-IDF is available in ESP IoT Solution repository. In most of cases descriptions are provided both in English and in 中文.
- To develop applications using Arduino platform, refer to Arduino core for ESP32 WiFi chip.
- Several books have been written about ESP32 and they are listed on Espressif web site.
- If you're interested in contributing to ESP-IDF, please check the *Contributions Guide*.
- For additional ESP32 product related information, please refer to documentation section of Espressif site.
- Download latest and previous versions of this documentation in PDF and HTML format.

Chapter 9

Copyrights and Licenses

9.1 Software Copyrights

All original source code in this repository is Copyright (C) 2015-2022 Espressif Systems. This source code is licensed under the Apache License 2.0 as described in the file LICENSE.

Additional third party copyrighted code is included under the following licenses.

Where source code headers specify Copyright & License information, this information takes precedence over the summaries made here.

9.1.1 Firmware Components

These third party libraries can be included into the application (firmware) produced by ESP-IDF.

- Newlib is licensed under the BSD License and is Copyright of various parties, as described in COPYING.NEWLIB.
- Xtensa header files are Copyright (C) 2013 Tensilica Inc and are licensed under the MIT License as reproduced in the individual header files.
- Original parts of FreeRTOS (components/freertos) are Copyright (C) 2017 Amazon.com, Inc. or its affiliates are licensed under the MIT License, as described in license.txt.
- Original parts of LWIP (components/lwip) are Copyright (C) 2001, 2002 Swedish Institute of Computer Science and are licensed under the BSD License as described in COPYING file.
- wpa_supplicant Copyright (c) 2003-2005 Jouni Malinen and licensed under the BSD license.
- FreeBSD net80211 Copyright (c) 2004-2008 Sam Leffler, Errno Consulting and licensed under the BSD license.
- JSMN JSON Parser (components/jsmn) Copyright (c) 2010 Serge A. Zaitsev and licensed under the MIT license.
- argtable3 argument parsing library Copyright (C) 1998-2001,2003-2011,2013 Stewart Heitmann and licensed under 3-clause BSD license.
- linenoise line editing library Copyright (c) 2010-2014 Salvatore Sanfilippo, Copyright (c) 2010-2013 Pieter Noordhuis, licensed under 2-clause BSD license.
- libcoap COAP library Copyright (c) 2010-2017 Olaf Bergmann and others, is licensed under 2-clause BSD license as described in LICENSE file and COPYING file .
- libexpat XML parsing library Copyright (c) 1998-2000 Thai Open Source Software Center Ltd and Clark Cooper, Copyright (c) 2001-2017 Expat maintainers, is licensed under MIT license as described in COPYING file .
- FatFS library, Copyright (C) 2017 ChaN, is licensed under a BSD-style license .
- cJSON library, Copyright (c) 2009-2017 Dave Gamble and cJSON contributors, is licensed under MIT license as described in LICENSE file .
- libsodium library, Copyright (c) 2013-2018 Frank Denis, is licensed under ISC license as described in LICENSE file .
- micro-ecc library, Copyright (c) 2014 Kenneth MacKay, is licensed under 2-clause BSD license.

- nghttp2 library, Copyright (c) 2012, 2014, 2015, 2016 Tatsuhiro Tsujikawa, Copyright (c) 2012, 2014, 2015, 2016 nghttp2 contributors, is licensed under MIT license as described in COPYING file .
- Mbed TLS library, Copyright (C) 2006-2018 ARM Limited, is licensed under Apache License 2.0 as described in LICENSE file .
- SPIFFS library, Copyright (c) 2013-2017 Peter Andersson, is licensed under MIT license as described in LICENSE file .
- TinyCBOR library, Copyright (c) 2017 Intel Corporation, is licensed under MIT License as described in LICENSE file .
- SD/MMC driver is derived from OpenBSD SD/MMC driver, Copyright (c) 2006 Uwe Stuehler, and is licensed under BSD license.
- Asio , Copyright (c) 2003-2018 Christopher M. Kohlhoff is licensed under the Boost Software License as described in COPYING file.
- ESP-MQTT MQTT Package (contiki-mqtt) - Copyright (c) 2014, Stephen Robinson, MQTT-ESP - Tuan PM <tuanpm at live dot com> is licensed under Apache License 2.0 as described in LICENSE file .
- BLE Mesh is adapted from Zephyr Project, Copyright (c) 2017-2018 Intel Corporation and licensed under Apache License 2.0
- mynewt-nimble Apache Mynewt NimBLE, Copyright 2015-2018, The Apache Software Foundation, is licensed under Apache License 2.0 as described in LICENSE file.
- cryptoauthlib Microchip CryptoAuthentication Library - Copyright (c) 2015 - 2018 Microchip Technology Inc, is licensed under common Microchip software License as described in LICENSE file
- TLSF allocator Two Level Segregated Fit memory allocator, Copyright (c) 2006-2016, Matthew Conte, and licensed under the BSD license.
- qrcode QR Code generator library Copyright (c) Project Nayuki, is licensed under MIT license.
- openthread, Copyright (c) The OpenThread Authors, is licensed under Apache License 2.0 as described in LICENSE file.
- UBSAN runtime —Copyright (c) 2016, Linaro Limited and Jiří Zárevúcky, licensed under the BSD 2-clause license.
- freemodbus Copyright (c) 2006-2013 Christian Walter, Armink and licensed under the BSD license.

9.1.2 Build Tools

This is the list of licenses for tools included in this repository, which are used to build applications. The tools do not become part of the application (firmware), so their license does not affect licensing of the application.

- esptool.py is Copyright (C) 2014-2016 Fredrik Ahlberg, Angus Gratton and is licensed under the GNU General Public License v2, as described in LICENSE file.
- KConfig is Copyright (C) 2002 Roman Zippel and others, and is licensed under the GNU General Public License V2.

9.1.3 Documentation

- HTML version of the ESP-IDF Programming Guide uses the Sphinx theme sphinx_idf_theme, which is Copyright (c) 2013-2020 Dave Snider, Read the Docs, Inc. & contributors, and Espressif Systems (Shanghai) CO., LTD. It is based on sphinx_rtd_theme. Both are licensed under MIT license.

9.2 ROM Source Code Copyrights

ESP32, ESP32-S and ESP32-C Series SoCs mask ROM hardware includes binaries compiled from portions of the following third party software:

- Newlib , licensed under the BSD License and is Copyright of various parties, as described in COPYING.NEWLIB.
- Xtensa libhal, Copyright (c) Tensilica Inc and licensed under the MIT license (see below).
- TinyBasic Plus, Copyright Mike Field & Scott Lawrence and licensed under the MIT license (see below).
- miniz, by Rich Geldreich - placed into the public domain.
- wpa_supplicant Copyright (c) 2003-2005 Jouni Malinen and licensed under the BSD license.

- TJpgDec Copyright (C) 2011, ChaN, all right reserved. See below for license.

9.3 Xtensa libhal MIT License

Copyright (c) 2003, 2006, 2010 Tensilica Inc.

Permission is hereby granted, free of charge, to any person obtaining a copy of this software and associated documentation files (the "Software"), to deal in the Software without restriction, including without limitation the rights to use, copy, modify, merge, publish, distribute, sublicense, and/or sell copies of the Software, and to permit persons to whom the Software is furnished to do so, subject to the following conditions:

The above copyright notice and this permission notice shall be included in all copies or substantial portions of the Software.

THE SOFTWARE IS PROVIDED "AS IS", WITHOUT WARRANTY OF ANY KIND, EXPRESS OR IMPLIED, INCLUDING BUT NOT LIMITED TO THE WARRANTIES OF MERCHANTABILITY, FITNESS FOR A PARTICULAR PURPOSE AND NONINFRINGEMENT. IN NO EVENT SHALL THE AUTHORS OR COPYRIGHT HOLDERS BE LIABLE FOR ANY CLAIM, DAMAGES OR OTHER LIABILITY, WHETHER IN AN ACTION OF CONTRACT, TORT OR OTHERWISE, ARISING FROM, OUT OF OR IN CONNECTION WITH THE SOFTWARE OR THE USE OR OTHER DEALINGS IN THE SOFTWARE.

9.4 TinyBasic Plus MIT License

Copyright (c) 2012-2013

Permission is hereby granted, free of charge, to any person obtaining a copy of this software and associated documentation files (the "Software"), to deal in the Software without restriction, including without limitation the rights to use, copy, modify, merge, publish, distribute, sublicense, and/or sell copies of the Software, and to permit persons to whom the Software is furnished to do so, subject to the following conditions:

The above copyright notice and this permission notice shall be included in all copies or substantial portions of the Software.

THE SOFTWARE IS PROVIDED "AS IS", WITHOUT WARRANTY OF ANY KIND, EXPRESS OR IMPLIED, INCLUDING BUT NOT LIMITED TO THE WARRANTIES OF MERCHANTABILITY, FITNESS FOR A PARTICULAR PURPOSE AND NONINFRINGEMENT. IN NO EVENT SHALL THE AUTHORS OR COPYRIGHT HOLDERS BE LIABLE FOR ANY CLAIM, DAMAGES OR OTHER LIABILITY, WHETHER IN AN ACTION OF CONTRACT, TORT OR OTHERWISE, ARISING FROM, OUT OF OR IN CONNECTION WITH THE SOFTWARE OR THE USE OR OTHER DEALINGS IN THE SOFTWARE.

9.5 TJpgDec License

TJpgDec - Tiny JPEG Decompressor R0.01 (C)ChaN, 2011 The TJpgDec is a generic JPEG decompressor module for tiny embedded systems. This is a free software that opened for education, research and commercial developments under license policy of following terms.

Copyright (C) 2011, ChaN, all right reserved.

- The TJpgDec module is a free software and there is NO WARRANTY.
- No restriction on use. You can use, modify and redistribute it for personal, non-profit or commercial products UNDER YOUR RESPONSIBILITY.
- Redistributions of source code must retain the above copyright notice.

Chapter 10

About

This is documentation of ESP-IDF, the framework to develop applications for ESP32 chip by Espressif.

The ESP32 is 2.4 GHz Wi-Fi and Bluetooth combo, which integrates one or two Xtensa® 32-bit LX6 CPU, with up to 600 DMIPS processing power.

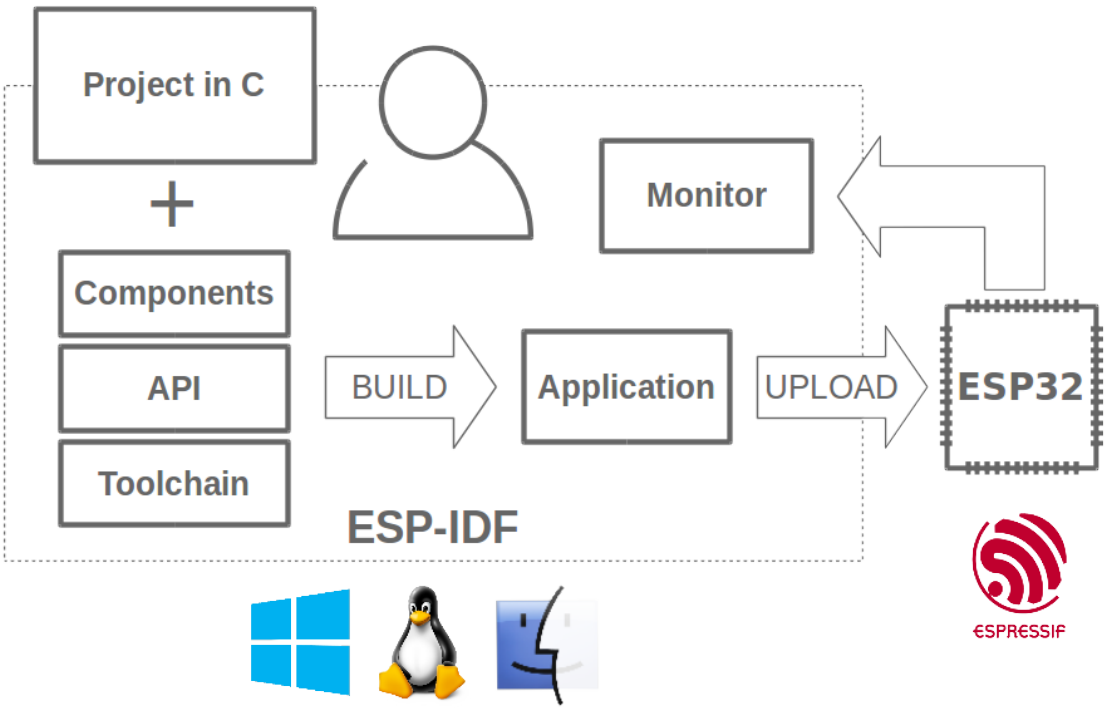

Fig. 1: Espressif IoT Integrated Development Framework

The ESP-IDF, Espressif IoT Development Framework, provides toolchain, API, components and workflows to develop applications for ESP32 using Windows, Linux and Mac OS operating systems.

Chapter 11

Switch Between Languages

The ESP-IDF Programming Guide is now available in two languages. Please refer to the English version if there is any discrepancy.

- English
- Chinese

You can easily change from one language to another by clicking the language link you can find at the top of every document that has a translation.

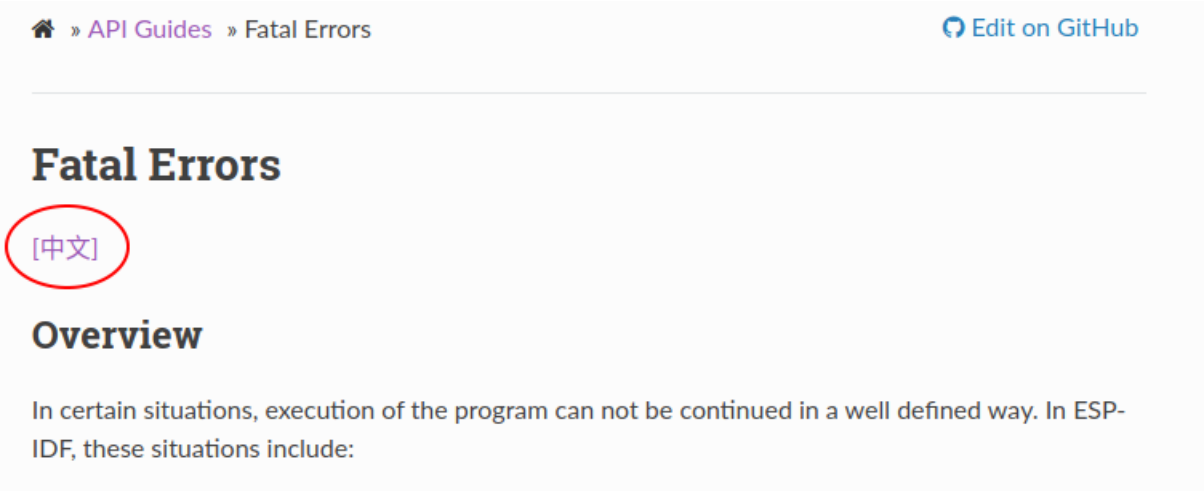

- genindex

Index

Symbols

_ESP_LOG_EARLY_ENABLED (*C macro*), 1686
_ESP_NETIF_SUPPRESS_LEGACY_WARNING_ (*C macro*), 815
_XFER_2_RD (*C macro*), 1265
_XFER_2_WR (*C macro*), 1265
_XFER_4_RD (*C macro*), 1265
_XFER_4_WR (*C macro*), 1265
[anonymous] (*C++ enum*), 157, 458
[anonymous]::ESP_BLE_MESH_SERVER_FLAG_MAX (*C++ enumerator*), 458
[anonymous]::ESP_BLE_MESH_SERVER_TRANS_TIMER_START (*C++ enumerator*), 458
[anonymous]::ESP_BLE_SCA_100PPM (*C++ enumerator*), 157
[anonymous]::ESP_BLE_SCA_150PPM (*C++ enumerator*), 157
[anonymous]::ESP_BLE_SCA_20PPM (*C++ enumerator*), 157
[anonymous]::ESP_BLE_SCA_250PPM (*C++ enumerator*), 157
[anonymous]::ESP_BLE_SCA_30PPM (*C++ enumerator*), 157
[anonymous]::ESP_BLE_SCA_500PPM (*C++ enumerator*), 157
[anonymous]::ESP_BLE_SCA_50PPM (*C++ enumerator*), 157
[anonymous]::ESP_BLE_SCA_75PPM (*C++ enumerator*), 157

A

ADC1_CHANNEL_0_GPIO_NUM (*C macro*), 843
ADC1_CHANNEL_1_GPIO_NUM (*C macro*), 843
ADC1_CHANNEL_2_GPIO_NUM (*C macro*), 843
ADC1_CHANNEL_3_GPIO_NUM (*C macro*), 843
ADC1_CHANNEL_4_GPIO_NUM (*C macro*), 843
ADC1_CHANNEL_5_GPIO_NUM (*C macro*), 843
ADC1_CHANNEL_6_GPIO_NUM (*C macro*), 844
ADC1_CHANNEL_7_GPIO_NUM (*C macro*), 844
adc1_channel_t (*C++ enum*), 834
adc1_channel_t::ADC1_CHANNEL_0 (*C++ enumerator*), 834
adc1_channel_t::ADC1_CHANNEL_1 (*C++ enumerator*), 834
adc1_channel_t::ADC1_CHANNEL_2 (*C++ enumerator*), 834
adc1_channel_t::ADC1_CHANNEL_3 (*C++ enumerator*), 834
adc1_channel_t::ADC1_CHANNEL_4 (*C++ enumerator*), 834
adc1_channel_t::ADC1_CHANNEL_5 (*C++ enumerator*), 834
adc1_channel_t::ADC1_CHANNEL_6 (*C++ enumerator*), 834
adc1_channel_t::ADC1_CHANNEL_7 (*C++ enumerator*), 834
adc1_channel_t::ADC1_CHANNEL_MAX (*C++ enumerator*), 834
adc1_config_channel_atten (*C++ function*), 827
adc1_config_width (*C++ function*), 827
adc1_get_raw (*C++ function*), 828
ADC1_GPIO32_CHANNEL (*C macro*), 843
ADC1_GPIO33_CHANNEL (*C macro*), 843
ADC1_GPIO34_CHANNEL (*C macro*), 843
ADC1_GPIO35_CHANNEL (*C macro*), 844
ADC1_GPIO36_CHANNEL (*C macro*), 843
ADC1_GPIO37_CHANNEL (*C macro*), 843
ADC1_GPIO38_CHANNEL (*C macro*), 843
ADC1_GPIO39_CHANNEL (*C macro*), 843
adc1_pad_get_io_num (*C++ function*), 826
adc1_ulp_enable (*C++ function*), 828
ADC2_CHANNEL_0_GPIO_NUM (*C macro*), 844
ADC2_CHANNEL_1_GPIO_NUM (*C macro*), 844
ADC2_CHANNEL_2_GPIO_NUM (*C macro*), 844
ADC2_CHANNEL_3_GPIO_NUM (*C macro*), 844
ADC2_CHANNEL_4_GPIO_NUM (*C macro*), 844
ADC2_CHANNEL_5_GPIO_NUM (*C macro*), 844
ADC2_CHANNEL_6_GPIO_NUM (*C macro*), 844
ADC2_CHANNEL_7_GPIO_NUM (*C macro*), 844
ADC2_CHANNEL_8_GPIO_NUM (*C macro*), 844
ADC2_CHANNEL_9_GPIO_NUM (*C macro*), 844
adc2_channel_t (*C++ enum*), 835
adc2_channel_t::ADC2_CHANNEL_0 (*C++ enumerator*), 835
adc2_channel_t::ADC2_CHANNEL_1 (*C++ enumerator*), 835
adc2_channel_t::ADC2_CHANNEL_2 (*C++ enumerator*), 835
adc2_channel_t::ADC2_CHANNEL_3 (*C++ enumerator*), 835
adc2_channel_t::ADC2_CHANNEL_4 (*C++ enumerator*), 835

adc2_channel_t::ADC2_CHANNEL_5 (C++ enumerator), 835
adc2_channel_t::ADC2_CHANNEL_6 (C++ enumerator), 835
adc2_channel_t::ADC2_CHANNEL_7 (C++ enumerator), 835
adc2_channel_t::ADC2_CHANNEL_8 (C++ enumerator), 835
adc2_channel_t::ADC2_CHANNEL_9 (C++ enumerator), 835
adc2_channel_t::ADC2_CHANNEL_MAX (C++ enumerator), 835
adc2_config_channel_atten (C++ function), 829
adc2_get_raw (C++ function), 830
ADC2_GPIO0_CHANNEL (C macro), 844
ADC2_GPIO12_CHANNEL (C macro), 844
ADC2_GPIO13_CHANNEL (C macro), 844
ADC2_GPIO14_CHANNEL (C macro), 844
ADC2_GPIO15_CHANNEL (C macro), 844
ADC2_GPIO25_CHANNEL (C macro), 844
ADC2_GPIO26_CHANNEL (C macro), 844
ADC2_GPIO27_CHANNEL (C macro), 844
ADC2_GPIO2_CHANNEL (C macro), 844
ADC2_GPIO4_CHANNEL (C macro), 844
adc2_pad_get_io_num (C++ function), 829
adc2_vref_to_gpio (C++ function), 830
ADC_ATTEN_0db (C macro), 833
ADC_ATTEN_11db (C macro), 833
ADC_ATTEN_2_5db (C macro), 833
ADC_ATTEN_6db (C macro), 833
adc_atten_t (C++ enum), 838
adc_atten_t::ADC_ATTEN_DB_0 (C++ enumerator), 838
adc_atten_t::ADC_ATTEN_DB_11 (C++ enumerator), 838
adc_atten_t::ADC_ATTEN_DB_2_5 (C++ enumerator), 838
adc_atten_t::ADC_ATTEN_DB_6 (C++ enumerator), 838
adc_atten_t::ADC_ATTEN_MAX (C++ enumerator), 838
adc_bits_width_t (C++ enum), 838
adc_bits_width_t::ADC_WIDTH_BIT_10 (C++ enumerator), 839
adc_bits_width_t::ADC_WIDTH_BIT_11 (C++ enumerator), 839
adc_bits_width_t::ADC_WIDTH_BIT_12 (C++ enumerator), 839
adc_bits_width_t::ADC_WIDTH_BIT_9 (C++ enumerator), 839
adc_bits_width_t::ADC_WIDTH_MAX (C++ enumerator), 839
adc_channel_t (C++ enum), 837
adc_channel_t::ADC_CHANNEL_0 (C++ enumerator), 837
adc_channel_t::ADC_CHANNEL_1 (C++ enumerator), 837
adc_channel_t::ADC_CHANNEL_2 (C++ enumerator), 837
adc_channel_t::ADC_CHANNEL_3 (C++ enumerator), 838
adc_channel_t::ADC_CHANNEL_4 (C++ enumerator), 838
adc_channel_t::ADC_CHANNEL_5 (C++ enumerator), 838
adc_channel_t::ADC_CHANNEL_6 (C++ enumerator), 838
adc_channel_t::ADC_CHANNEL_7 (C++ enumerator), 838
adc_channel_t::ADC_CHANNEL_8 (C++ enumerator), 838
adc_channel_t::ADC_CHANNEL_9 (C++ enumerator), 838
adc_channel_t::ADC_CHANNEL_MAX (C++ enumerator), 838
adc_digi_configuration_t (C++ struct), 833
adc_digi_configuration_t::adc_pattern (C++ member), 833
adc_digi_configuration_t::conv_limit_en (C++ member), 833
adc_digi_configuration_t::conv_limit_num (C++ member), 833
adc_digi_configuration_t::conv_mode (C++ member), 833
adc_digi_configuration_t::format (C++ member), 833
adc_digi_configuration_t::pattern_num (C++ member), 833
adc_digi_configuration_t::sample_freq_hz (C++ member), 833
adc_digi_controller_configure (C++ function), 831
adc_digi_convert_mode_t (C++ enum), 839
adc_digi_convert_mode_t::ADC_CONV_ALTER_UNIT (C++ enumerator), 839
adc_digi_convert_mode_t::ADC_CONV_BOTH_UNIT (C++ enumerator), 839
adc_digi_convert_mode_t::ADC_CONV_SINGLE_UNIT_1 (C++ enumerator), 839
adc_digi_convert_mode_t::ADC_CONV_SINGLE_UNIT_2 (C++ enumerator), 839
adc_digi_convert_mode_t::ADC_CONV_UNIT_MAX (C++ enumerator), 839
adc_digi_deinitialize (C++ function), 831
adc_digi_init_config_s (C++ struct), 832
adc_digi_init_config_s::adc1_chan_mask (C++ member), 832
adc_digi_init_config_s::adc2_chan_mask (C++ member), 833
adc_digi_init_config_s::conv_num_each_intr (C++ member), 832
adc_digi_init_config_s::max_store_buf_size (C++ member), 832
adc_digi_init_config_t (C++ type), 834
adc_digi_initialize (C++ function), 831

adc_digi_output_data_t (*C++ struct*), 836
adc_digi_output_data_t::channel (*C++ member*), 836
adc_digi_output_data_t::data (*C++ member*), 836
adc_digi_output_data_t::type1 (*C++ member*), 836
adc_digi_output_data_t::type2 (*C++ member*), 837
adc_digi_output_data_t::unit (*C++ member*), 837
adc_digi_output_data_t::val (*C++ member*), 837
adc_digi_output_format_t (*C++ enum*), 839
adc_digi_output_format_t::ADC_DIGI_FORMAT_11BIT (*C++ enumerator*), 839
adc_digi_output_format_t::ADC_DIGI_FORMAT_12BIT (*C++ enumerator*), 839
adc_digi_output_format_t::ADC_DIGI_FORMAT_MAX (*C++ enumerator*), 840
adc_digi_output_format_t::ADC_DIGI_OUTPUT_FORMAT_TYPE1 (*C++ enumerator*), 840
adc_digi_output_format_t::ADC_DIGI_OUTPUT_FORMAT_TYPE2 (*C++ enumerator*), 840
adc_digi_pattern_config_t (*C++ struct*), 836
adc_digi_pattern_config_t::atten (*C++ member*), 836
adc_digi_pattern_config_t::bit_width (*C++ member*), 836
adc_digi_pattern_config_t::channel (*C++ member*), 836
adc_digi_pattern_config_t::unit (*C++ member*), 836
adc_digi_read_bytes (*C++ function*), 831
adc_digi_start (*C++ function*), 831
adc_digi_stop (*C++ function*), 831
adc_i2s_encode_t (*C++ enum*), 835
adc_i2s_encode_t::ADC_ENCODE_11BIT (*C++ enumerator*), 835
adc_i2s_encode_t::ADC_ENCODE_12BIT (*C++ enumerator*), 835
adc_i2s_encode_t::ADC_ENCODE_MAX (*C++ enumerator*), 836
adc_i2s_mode_init (*C++ function*), 832
adc_i2s_source_t (*C++ enum*), 840
adc_i2s_source_t::ADC_I2S_DATA_SRC_ADC (*C++ enumerator*), 840
adc_i2s_source_t::ADC_I2S_DATA_SRC_IO_SIG (*C++ enumerator*), 840
adc_i2s_source_t::ADC_I2S_DATA_SRC_MAX (*C++ enumerator*), 840
ADC_MAX_DELAY (*C macro*), 834
adc_power_acquire (*C++ function*), 826
adc_power_off (*C++ function*), 826
adc_power_on (*C++ function*), 826
adc_power_release (*C++ function*), 826
adc_set_clk_div (*C++ function*), 828
adc_set_data_inv (*C++ function*), 828
adc_set_data_width (*C++ function*), 828
adc_set_i2s_data_source (*C++ function*), 832
adc_unit_t (*C++ enum*), 837
adc_unit_t::ADC_UNIT_1 (*C++ enumerator*), 837
adc_unit_t::ADC_UNIT_2 (*C++ enumerator*), 837
adc_unit_t::ADC_UNIT_ALTER (*C++ enumerator*), 837
adc_unit_t::ADC_UNIT_BOTH (*C++ enumerator*), 837
adc_unit_t::ADC_UNIT_MAX (*C++ enumerator*), 837
adc_vref_to_gpio (*C++ function*), 830
ADC_WIDTH_10Bit (*C macro*), 834
ADC_WIDTH_11Bit (*C macro*), 834
ADC_WIDTH_12Bit (*C macro*), 834
ADC_WIDTH_9Bit (*C macro*), 834
ADC_WIDTH_BIT_DEFAULT (*C macro*), 833
ADD_DEV_FLUSHABLE_DEV_FLAG (*C macro*), 430
ADD_DEV_RM_TX_PEER_PROV_FLAG (*C macro*), 430
ADD_DEV_START_PROV_NOW_FLAG (*C macro*), 430
ALU_SEL_ADD (*C macro*), 2322
ALU_SEL_AND (*C macro*), 2322
ALU_SEL_LSH (*C macro*), 2322
ALU_SEL_MOV (*C macro*), 2322
ALU_SEL_OR (*C macro*), 2322
ALU_SEL_RSH (*C macro*), 2322
ALU_SEL_SDEC (*C macro*), 2322
ALU_SEL_SINC (*C macro*), 2322
ALU_SEL_SRST (*C macro*), 2322
ALU_SEL_SUB (*C macro*), 2322

B

B_CMP_GE (*C macro*), 2323
B_CMP_L (*C macro*), 2323
BD_ADDR (*C++ type*), 448
BD_ADDR_LEN (*C macro*), 429
BLE_BIT (*C macro*), 212
BLE_HCI_UART_H4_ACL (*C macro*), 383
BLE_HCI_UART_H4_CMD (*C macro*), 383
BLE_HCI_UART_H4_EVT (*C macro*), 383
BLE_HCI_UART_H4_NONE (*C macro*), 383
BLE_HCI_UART_H4_SCO (*C macro*), 383
BLE_UUID128_VAL_LENGTH (*C macro*), 1314
bootloader_fill_random (*C++ function*), 1715
bootloader_random_disable (*C++ function*), 1715
bootloader_random_enable (*C++ function*), 1715
BT_CONTROLLER_INIT_CONFIG_DEFAULT (*C macro*), 156
BT_OCTET32 (*C++ type*), 448
BT_OCTET32_LEN (*C macro*), 429
BTC_HF_CALL_END_TIMEOUT (*C macro*), 346
BTC_HF_INVALID_IDX (*C macro*), 346
BTC_HF_SECURITY (*C macro*), 346

BTC_HF_SERVICE_NAMES (*C macro*), 346
BTC_HF_SERVICES (*C macro*), 346
BTC_HFAG_SERVICE_NAME (*C macro*), 346
BTC_HSAG_SERVICE_NAME (*C macro*), 346
BX_JUMP_TYPE_DIRECT (*C macro*), 2322
BX_JUMP_TYPE_OVF (*C macro*), 2323
BX_JUMP_TYPE_ZERO (*C macro*), 2322

C

cap_event_data_t (*C++ struct*), 964
cap_event_data_t::cap_edge (*C++ member*), 964
cap_event_data_t::cap_value (*C++ member*), 964
cap_isr_cb_t (*C++ type*), 967
CONFIG_ESPTOOLPY_FLASHSIZE, 1390
CONFIG_FEATURE_CACHE_TX_BUF_BIT (*C macro*), 685
CONFIG_FEATURE_FTM_INITIATOR_BIT (*C macro*), 685
CONFIG_FEATURE_FTM_RESPONDER_BIT (*C macro*), 685
CONFIG_FEATURE_WPA3_SAE_BIT (*C macro*), 685
CONFIG_HEAP_TRACING_STACK_DEPTH (*C macro*), 1660
CONFIG_LWIP_SNTP_UPDATE_DELAY, 1733
CONFIG_LWIP_USE_ONLY_LWIP_SELECT, 1423
CONFIG_SPIRAM_BANKSWITCH_ENABLE, 1666
CONFIG_SPIRAM_BANKSWITCH_RESERVE, 1666

D

DAC_CHANNEL_1_GPIO_NUM (*C macro*), 847
DAC_CHANNEL_2_GPIO_NUM (*C macro*), 847
dac_channel_t (*C++ enum*), 848
dac_channel_t::DAC_CHANNEL_1 (*C++ enumerator*), 848
dac_channel_t::DAC_CHANNEL_2 (*C++ enumerator*), 848
dac_channel_t::DAC_CHANNEL_MAX (*C++ enumerator*), 848
dac_cw_config_t (*C++ struct*), 847
dac_cw_config_t::en_ch (*C++ member*), 847
dac_cw_config_t::freq (*C++ member*), 847
dac_cw_config_t::offset (*C++ member*), 847
dac_cw_config_t::phase (*C++ member*), 847
dac_cw_config_t::scale (*C++ member*), 847
dac_cw_generator_config (*C++ function*), 846
dac_cw_generator_disable (*C++ function*), 846
dac_cw_generator_enable (*C++ function*), 846
dac_cw_phase_t (*C++ enum*), 848
dac_cw_phase_t::DAC_CW_PHASE_0 (*C++ enumerator*), 848
dac_cw_phase_t::DAC_CW_PHASE_180 (*C++ enumerator*), 848
dac_cw_scale_t (*C++ enum*), 848
dac_cw_scale_t::DAC_CW_SCALE_1 (*C++ enumerator*), 848
dac_cw_scale_t::DAC_CW_SCALE_2 (*C++ enumerator*), 848
dac_cw_scale_t::DAC_CW_SCALE_4 (*C++ enumerator*), 848
dac_cw_scale_t::DAC_CW_SCALE_8 (*C++ enumerator*), 848
DAC_GPIO25_CHANNEL (*C macro*), 847
DAC_GPIO26_CHANNEL (*C macro*), 847
dac_i2s_disable (*C++ function*), 845
dac_i2s_enable (*C++ function*), 845
dac_output_disable (*C++ function*), 846
dac_output_enable (*C++ function*), 846
dac_output_voltage (*C++ function*), 846
dac_pad_get_io_num (*C++ function*), 846
DEFAULT_HTTP_BUF_SIZE (*C macro*), 1191
DEL_DEV_ADDR_FLAG (*C macro*), 430
DEL_DEV_UUID_FLAG (*C macro*), 430
dpp_bootstrap_type (*C++ enum*), 768
dpp_bootstrap_type::DPP_BOOTSTRAP_NFC_URI (*C++ enumerator*), 768
dpp_bootstrap_type::DPP_BOOTSTRAP_PKEX (*C++ enumerator*), 768
dpp_bootstrap_type::DPP_BOOTSTRAP_QR_CODE (*C++ enumerator*), 768

E

EFD_SUPPORT_ISR (*C macro*), 1436
emac_rmii_clock_gpio_t (*C++ enum*), 791
emac_rmii_clock_gpio_t::EMAC_APPL_CLK_OUT_GPIO (*C++ enumerator*), 791
emac_rmii_clock_gpio_t::EMAC_CLK_IN_GPIO (*C++ enumerator*), 791
emac_rmii_clock_gpio_t::EMAC_CLK_OUT_180_GPIO (*C++ enumerator*), 791
emac_rmii_clock_gpio_t::EMAC_CLK_OUT_GPIO (*C++ enumerator*), 791
emac_rmii_clock_mode_t (*C++ enum*), 791
emac_rmii_clock_mode_t::EMAC_CLK_DEFAULT (*C++ enumerator*), 791
emac_rmii_clock_mode_t::EMAC_CLK_EXT_IN (*C++ enumerator*), 791
emac_rmii_clock_mode_t::EMAC_CLK_OUT (*C++ enumerator*), 791
eNotifyAction (*C++ enum*), 1541
eNotifyAction::eIncrement (*C++ enumerator*), 1541
eNotifyAction::eNoAction (*C++ enumerator*), 1541
eNotifyAction::eSetBits (*C++ enumerator*), 1541
eNotifyAction::eSetValueWithoutOverwrite (*C++ enumerator*), 1541
eNotifyAction::eSetValueWithOverwrite (*C++ enumerator*), 1541
environment variable
    CONFIG_ESPTOOLPY_FLASHSIZE, 1390

CONFIG_LWIP_SNTP_UPDATE_DELAY, 1733
CONFIG_LWIP_USE_ONLY_LWIP_SELECT, 1423
CONFIG_SPIRAM_BANKSWITCH_ENABLE, 1666
CONFIG_SPIRAM_BANKSWITCH_RESERVE, 1666
eSleepModeStatus (*C++ enum*), 1541
eSleepModeStatus::eAbortSleep (*C++ enumerator*), 1541
eSleepModeStatus::eNoTasksWaitingTimeout (*C++ enumerator*), 1541
eSleepModeStatus::eStandardSleep (*C++ enumerator*), 1541
esp_a2d_audio_state_t (*C++ enum*), 312
esp_a2d_audio_state_t::ESP_A2D_AUDIO_STATE_REMOTE_SUSPEND (*C++ enumerator*), 313
esp_a2d_audio_state_t::ESP_A2D_AUDIO_STATE_STARTED (*C++ enumerator*), 313
esp_a2d_audio_state_t::ESP_A2D_AUDIO_STATE_STOPPED (*C++ enumerator*), 313
esp_a2d_cb_event_t (*C++ enum*), 314
esp_a2d_cb_event_t::ESP_A2D_AUDIO_CFG_EVT (*C++ enumerator*), 314
esp_a2d_cb_event_t::ESP_A2D_AUDIO_STATE_EVT (*C++ enumerator*), 314
esp_a2d_cb_event_t::ESP_A2D_CONNECTION_STATE_EVT (*C++ enumerator*), 314
esp_a2d_cb_event_t::ESP_A2D_MEDIA_CTRL_ACK_EVT (*C++ enumerator*), 314
esp_a2d_cb_event_t::ESP_A2D_PROF_STATE_EVT (*C++ enumerator*), 314
esp_a2d_cb_param_t (*C++ union*), 309
esp_a2d_cb_param_t::a2d_audio_cfg_param (*C++ struct*), 309
esp_a2d_cb_param_t::a2d_audio_cfg_param::mca (*C++ member*), 309
esp_a2d_cb_param_t::a2d_audio_cfg_param::remote_bda (*C++ member*), 309
esp_a2d_cb_param_t::a2d_audio_stat_param (*C++ struct*), 309
esp_a2d_cb_param_t::a2d_audio_stat_param::audio_cfg (*C++ member*), 310
esp_a2d_cb_param_t::a2d_audio_stat_param::state (*C++ member*), 310
esp_a2d_cb_param_t::a2d_conn_stat_param (*C++ struct*), 310
esp_a2d_cb_param_t::a2d_conn_stat_param::disc_rsn (*C++ member*), 310
esp_a2d_cb_param_t::a2d_conn_stat_param::peer_bda (*C++ member*), 310
esp_a2d_cb_param_t::a2d_conn_stat_param::state (*C++ member*), 310
esp_a2d_cb_param_t::a2d_prof_stat (*C++ member*), 309
esp_a2d_cb_param_t::a2d_prof_stat_param (*C++ struct*), 310
esp_a2d_cb_param_t::a2d_prof_stat_param::init_state (*C++ member*), 310
esp_a2d_cb_param_t::audio_cfg (*C++ member*), 309
esp_a2d_cb_param_t::audio_stat (*C++ member*), 309
esp_a2d_cb_param_t::conn_stat (*C++ member*), 309
esp_a2d_cb_param_t::media_ctrl_stat (*C++ member*), 309
esp_a2d_cb_param_t::media_ctrl_stat_param (*C++ struct*), 310
esp_a2d_cb_param_t::media_ctrl_stat_param::cmd (*C++ member*), 310
esp_a2d_cb_param_t::media_ctrl_stat_param::status (*C++ member*), 310
esp_a2d_connection_state_t (*C++ type*), 312
ESP_A2D_CIE_LEN_ATRAC (*C macro*), 311
ESP_A2D_CIE_LEN_M12 (*C macro*), 311
ESP_A2D_CIE_LEN_M24 (*C macro*), 311
ESP_A2D_CIE_LEN_SBC (*C macro*), 311
esp_a2d_connection_state_t (*C++ enum*), 312
esp_a2d_connection_state_t::ESP_A2D_CONNECTION_STATE_CONNECTED (*C++ enumerator*), 312
esp_a2d_connection_state_t::ESP_A2D_CONNECTION_STATE_CONNECTING (*C++ enumerator*), 312
esp_a2d_connection_state_t::ESP_A2D_CONNECTION_STATE_DISCONNECTED (*C++ enumerator*), 312
esp_a2d_connection_state_t::ESP_A2D_CONNECTION_STATE_DISCONNECTING (*C++ enumerator*), 312
esp_a2d_disc_rsn_t (*C++ enum*), 312
esp_a2d_disc_rsn_t::ESP_A2D_DISC_RSN_ABNORMAL (*C++ enumerator*), 312
esp_a2d_disc_rsn_t::ESP_A2D_DISC_RSN_NORMAL (*C++ enumerator*), 312
esp_a2d_init_state_t (*C++ enum*), 313
esp_a2d_init_state_t::ESP_A2D_DEINIT_SUCCESS (*C++ enumerator*), 313
esp_a2d_init_state_t::ESP_A2D_INIT_SUCCESS (*C++ enumerator*), 314
esp_a2d_mcc_t (*C++ struct*), 311
esp_a2d_mcc_t::atrac (*C++ member*), 311
esp_a2d_mcc_t::cie (*C++ member*), 311
esp_a2d_mcc_t::m12 (*C++ member*), 311
esp_a2d_mcc_t::m24 (*C++ member*), 311
esp_a2d_mcc_t::sbc (*C++ member*), 311
esp_a2d_mcc_t::type (*C++ member*), 311
ESP_A2D_MCT_ATRAC (*C macro*), 311
ESP_A2D_MCT_M12 (*C macro*), 311
ESP_A2D_MCT_M24 (*C macro*), 311
ESP_A2D_MCT_NON_A2DP (*C macro*), 311
ESP_A2D_MCT_SBC (*C macro*), 311
esp_a2d_mct_t (*C++ type*), 312
esp_a2d_media_ctrl (*C++ function*), 308
esp_a2d_media_ctrl_ack_t (*C++ enum*), 313
esp_a2d_media_ctrl_ack_t::ESP_A2D_MEDIA_CTRL_ACK_FAILURE (*C++ enumerator*), 313
esp_a2d_media_ctrl_ack_t::ESP_A2D_MEDIA_CTRL_ACK_

(C++ *enumerator*), 313
esp_a2d_media_ctrl_ack_t::ESP_A2D_MEDIA_CTRL_ACK_SUCCESS (C++ *enumerator*), 313
esp_a2d_media_ctrl_t (C++ *enum*), 313
esp_a2d_media_ctrl_t::ESP_A2D_MEDIA_CTRL_CHECK_SRC_RDY (C++ *enumerator*), 313
esp_a2d_media_ctrl_t::ESP_A2D_MEDIA_CTRL_NONE (C++ *enumerator*), 313
esp_a2d_media_ctrl_t::ESP_A2D_MEDIA_CTRL_START (C++ *enumerator*), 313
esp_a2d_media_ctrl_t::ESP_A2D_MEDIA_CTRL_STOP (C++ *enumerator*), 313
esp_a2d_media_ctrl_t::ESP_A2D_MEDIA_CTRL_SUSPEND (C++ *enumerator*), 313
esp_a2d_register_callback (C++ *function*), 307
esp_a2d_sink_connect (C++ *function*), 307
esp_a2d_sink_data_cb_t (C++ *type*), 312
esp_a2d_sink_deinit (C++ *function*), 307
esp_a2d_sink_disconnect (C++ *function*), 308
esp_a2d_sink_init (C++ *function*), 307
esp_a2d_sink_register_data_callback (C++ *function*), 307
esp_a2d_source_connect (C++ *function*), 308
esp_a2d_source_data_cb_t (C++ *type*), 312
esp_a2d_source_deinit (C++ *function*), 308
esp_a2d_source_disconnect (C++ *function*), 309
esp_a2d_source_init (C++ *function*), 308
esp_a2d_source_register_data_callback (C++ *function*), 308
esp_adc_cal_characteristics_t (C++ *struct*), 842
esp_adc_cal_characteristics_t::adc_num (C++ *member*), 842
esp_adc_cal_characteristics_t::atten (C++ *member*), 842
esp_adc_cal_characteristics_t::bit_width (C++ *member*), 842
esp_adc_cal_characteristics_t::coeff_a (C++ *member*), 842
esp_adc_cal_characteristics_t::coeff_b (C++ *member*), 842
esp_adc_cal_characteristics_t::high_curve (C++ *member*), 842
esp_adc_cal_characteristics_t::low_curve (C++ *member*), 842
esp_adc_cal_characteristics_t::version (C++ *member*), 842
esp_adc_cal_characteristics_t::vref (C++ *member*), 842
esp_adc_cal_characterize (C++ *function*), 840
esp_adc_cal_check_efuse (C++ *function*), 840
esp_adc_cal_get_voltage (C++ *function*), 841
esp_adc_cal_raw_to_voltage (C++ *function*), 841
esp_adc_cal_value_t (C++ *enum*), 842
esp_adc_cal_value_t::ESP_ADC_CAL_VAL_DEFAULT_VREF (C++ *enumerator*), 843
esp_adc_cal_value_t::ESP_ADC_CAL_VAL_EFUSE_TP (C++ *enumerator*), 843
esp_adc_cal_value_t::ESP_ADC_CAL_VAL_EFUSE_TP_FIT (C++ *enumerator*), 843
esp_adc_cal_value_t::ESP_ADC_CAL_VAL_EFUSE_VREF (C++ *enumerator*), 842
esp_adc_cal_value_t::ESP_ADC_CAL_VAL_MAX (C++ *enumerator*), 843
esp_adc_cal_value_t::ESP_ADC_CAL_VAL_NOT_SUPPORTED (C++ *enumerator*), 843
esp_app_abort_failed_hook_t (C++ *type*), 1645
ESP_APP_DESC_MAGIC_WORD (C *macro*), 1444
esp_app_desc_t (C++ *struct*), 1443
esp_app_desc_t::app_elf_sha256 (C++ *member*), 1444
esp_app_desc_t::date (C++ *member*), 1443
esp_app_desc_t::idf_ver (C++ *member*), 1444
esp_app_desc_t::magic_word (C++ *member*), 1443
esp_app_desc_t::project_name (C++ *member*), 1443
esp_app_desc_t::reserv1 (C++ *member*), 1443
esp_app_desc_t::reserv2 (C++ *member*), 1444
esp_app_desc_t::secure_version (C++ *member*), 1443
esp_app_desc_t::time (C++ *member*), 1443
esp_app_desc_t::version (C++ *member*), 1443
ESP_APP_ID_MAX (C *macro*), 162
ESP_APP_ID_MIN (C *macro*), 162
esp_apptrace_buffer_get (C++ *function*), 1447
esp_apptrace_buffer_put (C++ *function*), 1447
esp_apptrace_dest_t (C++ *enum*), 1450
esp_apptrace_dest_t::ESP_APPTRACE_DEST_JTAG (C++ *enumerator*), 1450
esp_apptrace_dest_t::ESP_APPTRACE_DEST_MAX (C++ *enumerator*), 1450
esp_apptrace_dest_t::ESP_APPTRACE_DEST_NUM (C++ *enumerator*), 1450
esp_apptrace_dest_t::ESP_APPTRACE_DEST_TRAX (C++ *enumerator*), 1450
esp_apptrace_dest_t::ESP_APPTRACE_DEST_UART0 (C++ *enumerator*), 1450
esp_apptrace_down_buffer_config (C++ *function*), 1446
esp_apptrace_down_buffer_get (C++ *function*), 1448
esp_apptrace_down_buffer_put (C++ *function*), 1448
esp_apptrace_fclose (C++ *function*), 1449
esp_apptrace_flush (C++ *function*), 1447

esp_apptrace_flush_nolock (*C++ function*), 1448
esp_apptrace_fopen (*C++ function*), 1448
esp_apptrace_fread (*C++ function*), 1449
esp_apptrace_fseek (*C++ function*), 1449
esp_apptrace_fstop (*C++ function*), 1449
esp_apptrace_ftell (*C++ function*), 1449
esp_apptrace_fwrite (*C++ function*), 1449
esp_apptrace_host_is_connected (*C++ function*), 1448
esp_apptrace_init (*C++ function*), 1446
esp_apptrace_read (*C++ function*), 1448
esp_apptrace_vprintf (*C++ function*), 1447
esp_apptrace_vprintf_to (*C++ function*), 1447
esp_apptrace_write (*C++ function*), 1447
esp_attr_control_t (*C++ struct*), 228
esp_attr_control_t::auto_rsp (*C++ member*), 229
esp_attr_desc_t (*C++ struct*), 228
esp_attr_desc_t::length (*C++ member*), 228
esp_attr_desc_t::max_length (*C++ member*), 228
esp_attr_desc_t::perm (*C++ member*), 228
esp_attr_desc_t::uuid_length (*C++ member*), 228
esp_attr_desc_t::uuid_p (*C++ member*), 228
esp_attr_desc_t::value (*C++ member*), 228
esp_attr_value_t (*C++ struct*), 229
esp_attr_value_t::attr_len (*C++ member*), 229
esp_attr_value_t::attr_max_len (*C++ member*), 229
esp_attr_value_t::attr_value (*C++ member*), 229
esp_avrc_batt_stat_t (*C++ enum*), 334
esp_avrc_batt_stat_t::ESP_AVRC_BATT_CRITICAL (*C++ enumerator*), 335
esp_avrc_batt_stat_t::ESP_AVRC_BATT_EXTERNAL (*C++ enumerator*), 335
esp_avrc_batt_stat_t::ESP_AVRC_BATT_FULL_CHARGE (*C++ enumerator*), 335
esp_avrc_batt_stat_t::ESP_AVRC_BATT_NORMAL (*C++ enumerator*), 335
esp_avrc_batt_stat_t::ESP_AVRC_BATT_WARNING (*C++ enumerator*), 335
esp_avrc_bit_mask_op_t (*C++ enum*), 329
esp_avrc_bit_mask_op_t::ESP_AVRC_BIT_MASK_OP_CLEAR (*C++ enumerator*), 329
esp_avrc_bit_mask_op_t::ESP_AVRC_BIT_MASK_OP_SET (*C++ enumerator*), 329
esp_avrc_bit_mask_op_t::ESP_AVRC_BIT_MASK_OP_TEST (*C++ enumerator*), 329
esp_avrc_ct_cb_event_t (*C++ enum*), 330
esp_avrc_ct_cb_event_t::ESP_AVRC_CT_CHANGE_NOTIFY_EVT (*C++ enumerator*), 330
esp_avrc_ct_cb_event_t::ESP_AVRC_CT_CONNECTION_STATE_EVT (*C++ enumerator*), 330
esp_avrc_ct_cb_event_t::ESP_AVRC_CT_GET_RN_CAPABI (*C++ enumerator*), 330
esp_avrc_ct_cb_event_t::ESP_AVRC_CT_METADATA_RSP_ (*C++ enumerator*), 330
esp_avrc_ct_cb_event_t::ESP_AVRC_CT_PASSTHROUGH_R (*C++ enumerator*), 330
esp_avrc_ct_cb_event_t::ESP_AVRC_CT_PLAY_STATUS_R (*C++ enumerator*), 330
esp_avrc_ct_cb_event_t::ESP_AVRC_CT_REMOTE_FEATUR (*C++ enumerator*), 330
esp_avrc_ct_cb_event_t::ESP_AVRC_CT_SET_ABSOLUTE_ (*C++ enumerator*), 330
esp_avrc_ct_cb_param_t (*C++ union*), 319
esp_avrc_ct_cb_param_t::avrc_ct_change_notify_par (*C++ struct*), 320
esp_avrc_ct_cb_param_t::avrc_ct_change_notify_par (*C++ member*), 320
esp_avrc_ct_cb_param_t::avrc_ct_change_notify_par (*C++ member*), 320
esp_avrc_ct_cb_param_t::avrc_ct_conn_stat_param (*C++ struct*), 320
esp_avrc_ct_cb_param_t::avrc_ct_conn_stat_param:: (*C++ member*), 320
esp_avrc_ct_cb_param_t::avrc_ct_conn_stat_param:: (*C++ member*), 320
esp_avrc_ct_cb_param_t::avrc_ct_get_rn_caps_rsp_p (*C++ struct*), 320
esp_avrc_ct_cb_param_t::avrc_ct_get_rn_caps_rsp_p (*C++ member*), 320
esp_avrc_ct_cb_param_t::avrc_ct_get_rn_caps_rsp_p (*C++ member*), 320
esp_avrc_ct_cb_param_t::avrc_ct_meta_rsp_param (*C++ struct*), 320
esp_avrc_ct_cb_param_t::avrc_ct_meta_rsp_param::a (*C++ member*), 320
esp_avrc_ct_cb_param_t::avrc_ct_meta_rsp_param::a (*C++ member*), 320
esp_avrc_ct_cb_param_t::avrc_ct_meta_rsp_param::a (*C++ member*), 320
esp_avrc_ct_cb_param_t::avrc_ct_psth_rsp_param (*C++ struct*), 321
esp_avrc_ct_cb_param_t::avrc_ct_psth_rsp_param::k (*C++ member*), 321
esp_avrc_ct_cb_param_t::avrc_ct_psth_rsp_param::k (*C++ member*), 321
esp_avrc_ct_cb_param_t::avrc_ct_psth_rsp_param::t (*C++ member*), 321
esp_avrc_ct_cb_param_t::avrc_ct_rmt_feats_param (*C++ struct*), 321
esp_avrc_ct_cb_param_t::avrc_ct_rmt_feats_param:: (*C++ member*), 321
esp_avrc_ct_cb_param_t::avrc_ct_rmt_feats_param:: (*C++ member*), 321
esp_avrc_ct_cb_param_t::avrc_ct_rmt_feats_param:: (*C++ member*), 321
esp_avrc_ct_cb_param_t::avrc_ct_set_volume_rsp_pa (*C++ struct*), 321
esp_avrc_ct_cb_param_t::avrc_ct_set_volume_rsp_pa

(C++ *member*), 321
esp_avrc_ct_cb_param_t::change_ntf (C++ *member*), 319
esp_avrc_ct_cb_param_t::conn_stat (C++ *member*), 319
esp_avrc_ct_cb_param_t::get_rn_caps_rsp (C++ *member*), 319
esp_avrc_ct_cb_param_t::meta_rsp (C++ *member*), 319
esp_avrc_ct_cb_param_t::psth_rsp (C++ *member*), 319
esp_avrc_ct_cb_param_t::rmt_feats (C++ *member*), 319
esp_avrc_ct_cb_param_t::set_volume_rsp (C++ *member*), 319
esp_avrc_ct_cb_t (C++ *type*), 324
esp_avrc_ct_deinit (C++ *function*), 315
esp_avrc_ct_init (C++ *function*), 314
esp_avrc_ct_register_callback (C++ *function*), 314
esp_avrc_ct_send_get_rn_capabilities_cmd (C++ *function*), 315
esp_avrc_ct_send_metadata_cmd (C++ *function*), 316
esp_avrc_ct_send_passthrough_cmd (C++ *function*), 316
esp_avrc_ct_send_register_notification_cmd (C++ *function*), 315
esp_avrc_ct_send_set_absolute_volume_cmd (C++ *function*), 315
esp_avrc_ct_send_set_player_value_cmd (C++ *function*), 315
esp_avrc_feature_flag_t (C++ *enum*), 325
esp_avrc_feature_flag_t::ESP_AVRC_FEAT_FLAG_BROWSING (C++ *enumerator*), 325
esp_avrc_feature_flag_t::ESP_AVRC_FEAT_FLAG_CAT1 (C++ *enumerator*), 325
esp_avrc_feature_flag_t::ESP_AVRC_FEAT_FLAG_CAT2 (C++ *enumerator*), 325
esp_avrc_feature_flag_t::ESP_AVRC_FEAT_FLAG_CAT3 (C++ *enumerator*), 325
esp_avrc_feature_flag_t::ESP_AVRC_FEAT_FLAG_CAT4 (C++ *enumerator*), 325
esp_avrc_feature_flag_t::ESP_AVRC_FEAT_FLAG_COVER_ART_GET_IMAGE_PROP (C++ *enumerator*), 325
esp_avrc_feature_flag_t::ESP_AVRC_FEAT_FLAG_COVER_ART_GET_LINKED_THUMBNAIL (C++ *enumerator*), 325
esp_avrc_features_t (C++ *enum*), 324
esp_avrc_features_t::ESP_AVRC_FEAT_ADV_CTRL (C++ *enumerator*), 325
esp_avrc_features_t::ESP_AVRC_FEAT_BROWSE (C++ *enumerator*), 325
esp_avrc_features_t::ESP_AVRC_FEAT_META_DATA (C++ *enumerator*), 325
esp_avrc_features_t::ESP_AVRC_FEAT_RCCT (C++ *enumerator*), 324
esp_avrc_features_t::ESP_AVRC_FEAT_RCTG (C++ *enumerator*), 324
esp_avrc_features_t::ESP_AVRC_FEAT_VENDOR (C++ *enumerator*), 324
esp_avrc_md_attr_mask_t (C++ *enum*), 331
esp_avrc_md_attr_mask_t::ESP_AVRC_MD_ATTR_ALBUM (C++ *enumerator*), 331
esp_avrc_md_attr_mask_t::ESP_AVRC_MD_ATTR_ARTIST (C++ *enumerator*), 331
esp_avrc_md_attr_mask_t::ESP_AVRC_MD_ATTR_GENRE (C++ *enumerator*), 331
esp_avrc_md_attr_mask_t::ESP_AVRC_MD_ATTR_NUM_TRA (C++ *enumerator*), 331
esp_avrc_md_attr_mask_t::ESP_AVRC_MD_ATTR_PLAYING (C++ *enumerator*), 331
esp_avrc_md_attr_mask_t::ESP_AVRC_MD_ATTR_TITLE (C++ *enumerator*), 331
esp_avrc_md_attr_mask_t::ESP_AVRC_MD_ATTR_TRACK_N (C++ *enumerator*), 331
esp_avrc_playback_stat_t (C++ *enum*), 335
esp_avrc_playback_stat_t::ESP_AVRC_PLAYBACK_ERROR (C++ *enumerator*), 335
esp_avrc_playback_stat_t::ESP_AVRC_PLAYBACK_FWD_S (C++ *enumerator*), 335
esp_avrc_playback_stat_t::ESP_AVRC_PLAYBACK_PAUSE (C++ *enumerator*), 335
esp_avrc_playback_stat_t::ESP_AVRC_PLAYBACK_PLAYI (C++ *enumerator*), 335
esp_avrc_playback_stat_t::ESP_AVRC_PLAYBACK_REV_S (C++ *enumerator*), 335
esp_avrc_playback_stat_t::ESP_AVRC_PLAYBACK_STOPP (C++ *enumerator*), 335
esp_avrc_ps_attr_ids_t (C++ *enum*), 333
esp_avrc_ps_attr_ids_t::ESP_AVRC_PS_EQUALIZER (C++ *enumerator*), 333
esp_avrc_ps_attr_ids_t::ESP_AVRC_PS_MAX_ATTR (C++ *enumerator*), 333
esp_avrc_ps_attr_ids_t::ESP_AVRC_PS_REPEAT_MODE (C++ *enumerator*), 333
esp_avrc_ps_attr_ids_t::ESP_AVRC_PS_SCAN_MODE (C++ *enumerator*), 333
esp_avrc_ps_attr_ids_t::ESP_AVRC_PS_SHUFFLE_MODE (C++ *enumerator*), 333
esp_avrc_ps_cover_art_get_image_t (C++ *enum*), 333
esp_avrc_ps_cover_art_get_image_t::ESP_AVRC_PS_EQUALIZER (C++ *enumerator*), 333
esp_avrc_ps_cover_art_get_linked_thumbnail_t::ESP_AVRC_PS_EQUALIZER (C++ *enumerator*), 333
esp_avrc_ps_rpt_value_ids_t (C++ *enum*), 333
esp_avrc_ps_rpt_value_ids_t::ESP_AVRC_PS_REPEAT_G (C++ *enumerator*), 333
esp_avrc_ps_rpt_value_ids_t::ESP_AVRC_PS_REPEAT_O (C++ *enumerator*), 333
esp_avrc_ps_rpt_value_ids_t::ESP_AVRC_PS_REPEAT_S (C++ *enumerator*), 333
esp_avrc_ps_scn_value_ids_t (C++ *enum*),

334
esp_avrc_ps_scn_value_ids_t::ESP_AVRC_PS_SCAN_ALL (C++ enumerator), 334
esp_avrc_ps_scn_value_ids_t::ESP_AVRC_PS_SCAN_GROUP (C++ enumerator), 334
esp_avrc_ps_scn_value_ids_t::ESP_AVRC_PS_SCAN_OFF (C++ enumerator), 334
esp_avrc_ps_shf_value_ids_t (C++ enum), 333
esp_avrc_ps_shf_value_ids_t::ESP_AVRC_PS_SHUFFLE_ALL (C++ enumerator), 334
esp_avrc_ps_shf_value_ids_t::ESP_AVRC_PS_SHUFFLE_GROUP (C++ enumerator), 334
esp_avrc_ps_shf_value_ids_t::ESP_AVRC_PS_SHUFFLE_OFF (C++ enumerator), 334
esp_avrc_psth_bit_mask_operation (C++ function), 317
esp_avrc_psth_bit_mask_t (C++ struct), 323
esp_avrc_psth_bit_mask_t::bits (C++ member), 323
esp_avrc_psth_filter_t (C++ enum), 329
esp_avrc_psth_filter_t::ESP_AVRC_PSTH_FILTER_ALLOWED_CMD (C++ enumerator), 329
esp_avrc_psth_filter_t::ESP_AVRC_PSTH_FILTER_SUPPORTED_CMD_MAX (C++ enumerator), 329
esp_avrc_psth_filter_t::ESP_AVRC_PSTH_FILTER_SUPPORTED_CMD_TBL (C++ enumerator), 329
esp_avrc_pt_cmd_state_t (C++ enum), 329
esp_avrc_pt_cmd_state_t::ESP_AVRC_PT_CMD_STATE_PRESSED (C++ enumerator), 329
esp_avrc_pt_cmd_state_t::ESP_AVRC_PT_CMD_STATE_RELEASED (C++ enumerator), 330
esp_avrc_pt_cmd_t (C++ enum), 325
esp_avrc_pt_cmd_t::ESP_AVRC_PT_CMD_0 (C++ enumerator), 326
esp_avrc_pt_cmd_t::ESP_AVRC_PT_CMD_1 (C++ enumerator), 326
esp_avrc_pt_cmd_t::ESP_AVRC_PT_CMD_2 (C++ enumerator), 326
esp_avrc_pt_cmd_t::ESP_AVRC_PT_CMD_3 (C++ enumerator), 326
esp_avrc_pt_cmd_t::ESP_AVRC_PT_CMD_4 (C++ enumerator), 326
esp_avrc_pt_cmd_t::ESP_AVRC_PT_CMD_5 (C++ enumerator), 327
esp_avrc_pt_cmd_t::ESP_AVRC_PT_CMD_6 (C++ enumerator), 327
esp_avrc_pt_cmd_t::ESP_AVRC_PT_CMD_7 (C++ enumerator), 327
esp_avrc_pt_cmd_t::ESP_AVRC_PT_CMD_8 (C++ enumerator), 327
esp_avrc_pt_cmd_t::ESP_AVRC_PT_CMD_9 (C++ enumerator), 327
esp_avrc_pt_cmd_t::ESP_AVRC_PT_CMD_ANGLE (C++ enumerator), 328
esp_avrc_pt_cmd_t::ESP_AVRC_PT_CMD_BACKWARD (C++ enumerator), 328
esp_avrc_pt_cmd_t::ESP_AVRC_PT_CMD_CHAN_DOWN (C++ enumerator), 327
esp_avrc_pt_cmd_t::ESP_AVRC_PT_CMD_CHAN_UP (C++ enumerator), 327
esp_avrc_pt_cmd_t::ESP_AVRC_PT_CMD_CLEAR (C++ enumerator), 327
esp_avrc_pt_cmd_t::ESP_AVRC_PT_CMD_CONT_MENU (C++ enumerator), 326
esp_avrc_pt_cmd_t::ESP_AVRC_PT_CMD_DISP_INFO (C++ enumerator), 327
esp_avrc_pt_cmd_t::ESP_AVRC_PT_CMD_DOT (C++ enumerator), 327
esp_avrc_pt_cmd_t::ESP_AVRC_PT_CMD_DOWN (C++ enumerator), 325
esp_avrc_pt_cmd_t::ESP_AVRC_PT_CMD_EJECT (C++ enumerator), 328
esp_avrc_pt_cmd_t::ESP_AVRC_PT_CMD_ENTER (C++ enumerator), 327
esp_avrc_pt_cmd_t::ESP_AVRC_PT_CMD_EXIT (C++ enumerator), 326
esp_avrc_pt_cmd_t::ESP_AVRC_PT_CMD_F1 (C++ enumerator), 329
esp_avrc_pt_cmd_t::ESP_AVRC_PT_CMD_F2 (C++ enumerator), 329
esp_avrc_pt_cmd_t::ESP_AVRC_PT_CMD_F3 (C++ enumerator), 329
esp_avrc_pt_cmd_t::ESP_AVRC_PT_CMD_F4 (C++ enumerator), 329
esp_avrc_pt_cmd_t::ESP_AVRC_PT_CMD_F5 (C++ enumerator), 329
esp_avrc_pt_cmd_t::ESP_AVRC_PT_CMD_FAST_FORWARD (C++ enumerator), 328
esp_avrc_pt_cmd_t::ESP_AVRC_PT_CMD_FAV_MENU (C++ enumerator), 326
esp_avrc_pt_cmd_t::ESP_AVRC_PT_CMD_FORWARD (C++ enumerator), 328
esp_avrc_pt_cmd_t::ESP_AVRC_PT_CMD_HELP (C++ enumerator), 327
esp_avrc_pt_cmd_t::ESP_AVRC_PT_CMD_INPUT_SEL (C++ enumerator), 327
esp_avrc_pt_cmd_t::ESP_AVRC_PT_CMD_LEFT (C++ enumerator), 326
esp_avrc_pt_cmd_t::ESP_AVRC_PT_CMD_LEFT_DOWN (C++ enumerator), 326
esp_avrc_pt_cmd_t::ESP_AVRC_PT_CMD_LEFT_UP (C++ enumerator), 326
esp_avrc_pt_cmd_t::ESP_AVRC_PT_CMD_MUTE (C++ enumerator), 328
esp_avrc_pt_cmd_t::ESP_AVRC_PT_CMD_PAGE_DOWN (C++ enumerator), 328
esp_avrc_pt_cmd_t::ESP_AVRC_PT_CMD_PAGE_UP (C++ enumerator), 327
esp_avrc_pt_cmd_t::ESP_AVRC_PT_CMD_PAUSE (C++ enumerator), 328
esp_avrc_pt_cmd_t::ESP_AVRC_PT_CMD_PLAY (C++ enumerator), 328
esp_avrc_pt_cmd_t::ESP_AVRC_PT_CMD_POWER (C++ enumerator), 328
esp_avrc_pt_cmd_t::ESP_AVRC_PT_CMD_PREV_CHAN

(C++ enumerator), 327
esp_avrc_pt_cmd_t::ESP_AVRC_PT_CMD_RECORD
(C++ enumerator), 328
esp_avrc_pt_cmd_t::ESP_AVRC_PT_CMD_REWIND
(C++ enumerator), 328
esp_avrc_pt_cmd_t::ESP_AVRC_PT_CMD_RIGHT
(C++ enumerator), 326
esp_avrc_pt_cmd_t::ESP_AVRC_PT_CMD_RIGHT_DOWN
(C++ enumerator), 326
esp_avrc_pt_cmd_t::ESP_AVRC_PT_CMD_RIGHT_UP
(C++ enumerator), 326
esp_avrc_pt_cmd_t::ESP_AVRC_PT_CMD_ROOT_MENU
(C++ enumerator), 326
esp_avrc_pt_cmd_t::ESP_AVRC_PT_CMD_SELECT
(C++ enumerator), 325
esp_avrc_pt_cmd_t::ESP_AVRC_PT_CMD_SETUP_MENU
(C++ enumerator), 326
esp_avrc_pt_cmd_t::ESP_AVRC_PT_CMD_SOUND_SEL
(C++ enumerator), 327
esp_avrc_pt_cmd_t::ESP_AVRC_PT_CMD_STOP
(C++ enumerator), 328
esp_avrc_pt_cmd_t::ESP_AVRC_PT_CMD_SUBPICT
(C++ enumerator), 328
esp_avrc_pt_cmd_t::ESP_AVRC_PT_CMD_UP
(C++ enumerator), 325
esp_avrc_pt_cmd_t::ESP_AVRC_PT_CMD_VENDOR
(C++ enumerator), 329
esp_avrc_pt_cmd_t::ESP_AVRC_PT_CMD_VOL_DOWN
(C++ enumerator), 328
esp_avrc_pt_cmd_t::ESP_AVRC_PT_CMD_VOL_UP
(C++ enumerator), 328
esp_avrc_rn_event_ids_t (C++ enum), 331
esp_avrc_rn_event_ids_t::ESP_AVRC_RN_ADDRESSED_PLAYER_CHANGE
(C++ enumerator), 332
esp_avrc_rn_event_ids_t::ESP_AVRC_RN_APP_SETTING_CHANGE
(C++ enumerator), 332
esp_avrc_rn_event_ids_t::ESP_AVRC_RN_AVAILABLE_PLAYERS_CHANGE
(C++ enumerator), 332
esp_avrc_rn_event_ids_t::ESP_AVRC_RN_BATTERY_STATUS_CHANGE
(C++ enumerator), 332
esp_avrc_rn_event_ids_t::ESP_AVRC_RN_MAX_EVT
(C++ enumerator), 332
esp_avrc_rn_event_ids_t::ESP_AVRC_RN_NOW_PLAYING_CHANGE
(C++ enumerator), 332
esp_avrc_rn_event_ids_t::ESP_AVRC_RN_PLAY_POS_CHANGED
(C++ enumerator), 332
esp_avrc_rn_event_ids_t::ESP_AVRC_RN_PLAY_STATUS_CHANGE
(C++ enumerator), 331
esp_avrc_rn_event_ids_t::ESP_AVRC_RN_SYSTEM_STATUS_CHANGE
(C++ enumerator), 332
esp_avrc_rn_event_ids_t::ESP_AVRC_RN_TRACK_CHANGE
(C++ enumerator), 331
esp_avrc_rn_event_ids_t::ESP_AVRC_RN_TRACK_REACHED_END
(C++ enumerator), 331
esp_avrc_rn_event_ids_t::ESP_AVRC_RN_TRACK_REACHED_START
(C++ enumerator), 331
esp_avrc_rn_event_ids_t::ESP_AVRC_RN_UIDS_CHANGE
(C++ enumerator), 332
esp_avrc_rn_event_ids_t::ESP_AVRC_RN_VOLUME_CHANG
(C++ enumerator), 332
esp_avrc_rn_evt_bit_mask_operation
(C++ function), 318
esp_avrc_rn_evt_cap_mask_t (C++ struct), 323
esp_avrc_rn_evt_cap_mask_t::bits (C++ member), 324
esp_avrc_rn_evt_cap_t (C++ enum), 332
esp_avrc_rn_evt_cap_t::ESP_AVRC_RN_CAP_ALLOWED_EV
(C++ enumerator), 332
esp_avrc_rn_evt_cap_t::ESP_AVRC_RN_CAP_MAX
(C++ enumerator), 332
esp_avrc_rn_evt_cap_t::ESP_AVRC_RN_CAP_SUPPORTED_
(C++ enumerator), 332
esp_avrc_rn_param_t (C++ union), 319
esp_avrc_rn_param_t::batt (C++ member), 319
esp_avrc_rn_param_t::elm_id (C++ member), 319
esp_avrc_rn_param_t::play_pos (C++ member), 319
esp_avrc_rn_param_t::playback (C++ member), 319
esp_avrc_rn_param_t::volume (C++ member), 319
esp_avrc_rn_rsp_t (C++ enum), 332
esp_avrc_rn_rsp_t::ESP_AVRC_RN_RSP_CHANGED
(C++ enumerator), 333
esp_avrc_rn_rsp_t::ESP_AVRC_RN_RSP_INTERIM
(C++ enumerator), 332
esp_avrc_rsp_t (C++ enum), 334
esp_avrc_rsp_t::ESP_AVRC_RSP_ACCEPT
(C++ enumerator), 334
esp_avrc_rsp_t::ESP_AVRC_RSP_CHANGED
(C++ enumerator), 334
esp_avrc_rsp_t::ESP_AVRC_RSP_IMPL_STBL
(C++ enumerator), 334
esp_avrc_rsp_t::ESP_AVRC_RSP_IN_TRANS
(C++ enumerator), 334
esp_avrc_rsp_t::ESP_AVRC_RSP_INTERIM
(C++ enumerator), 334
esp_avrc_rsp_t::ESP_AVRC_RSP_NOT_IMPL
(C++ enumerator), 334
esp_avrc_rsp_t::ESP_AVRC_RSP_REJECT
(C++ enumerator), 334
esp_avrc_set_app_value_param_t (C++ struct), 324
esp_avrc_set_app_value_param_t::attr_id
(C++ member), 324
esp_avrc_set_app_value_param_t::attr_val
(C++ member), 324
esp_avrc_tg_cb_event_t (C++ enum), 330
esp_avrc_tg_cb_event_t::ESP_AVRC_TG_CONNECTION_ST
(C++ enumerator), 330
esp_avrc_tg_cb_event_t::ESP_AVRC_TG_PASSTHROUGH_C
(C++ enumerator), 330
esp_avrc_tg_cb_event_t::ESP_AVRC_TG_REGISTER_NOTI

(C++ enumerator), 331
esp_avrc_tg_cb_event_t::ESP_AVRC_TG_REMOTE_FEATURES (C++ enumerator), 330
esp_avrc_tg_cb_event_t::ESP_AVRC_TG_SET_ABSOLUTE_VOLUME_CMD_EVT (C++ enumerator), 330
esp_avrc_tg_cb_event_t::ESP_AVRC_TG_SET_PLAYER_APP_VALUE_EVT (C++ enumerator), 331
esp_avrc_tg_cb_param_t (C++ union), 321
esp_avrc_tg_cb_param_t::avrc_tg_conn_stat (C++ struct), 322
esp_avrc_tg_cb_param_t::avrc_tg_conn_stat::connected (C++ member), 322
esp_avrc_tg_cb_param_t::avrc_tg_conn_stat::remote_bda (C++ member), 322
esp_avrc_tg_cb_param_t::avrc_tg_psth_cmd (C++ struct), 322
esp_avrc_tg_cb_param_t::avrc_tg_psth_cmd::key_code (C++ member), 322
esp_avrc_tg_cb_param_t::avrc_tg_psth_cmd::key_state (C++ member), 322
esp_avrc_tg_cb_param_t::avrc_tg_reg_ntf (C++ struct), 322
esp_avrc_tg_cb_param_t::avrc_tg_reg_ntf::event_id (C++ member), 322
esp_avrc_tg_cb_param_t::avrc_tg_reg_ntf::event_parameter (C++ member), 322
esp_avrc_tg_cb_param_t::avrc_tg_rmt_feats (C++ struct), 323
esp_avrc_tg_cb_param_t::avrc_tg_rmt_feats_param_ct_feat_flag (C++ member), 323
esp_avrc_tg_cb_param_t::avrc_tg_rmt_feats_param_remote_feat_flag (C++ member), 323
esp_avrc_tg_cb_param_t::avrc_tg_rmt_feats_param_tg_feat_flag (C++ member), 323
esp_avrc_tg_cb_param_t::avrc_tg_set_abs_vol_param (C++ struct), 323
esp_avrc_tg_cb_param_t::avrc_tg_set_abs_vol_param::volume (C++ member), 323
esp_avrc_tg_cb_param_t::avrc_tg_set_app_value_param (C++ struct), 323
esp_avrc_tg_cb_param_t::avrc_tg_set_app_value_param::num_val (C++ member), 323
esp_avrc_tg_cb_param_t::avrc_tg_set_app_value_param::p_vals (C++ member), 323
esp_avrc_tg_cb_param_t::conn_stat (C++ member), 321
esp_avrc_tg_cb_param_t::psth_cmd (C++ member), 322
esp_avrc_tg_cb_param_t::reg_ntf (C++ member), 322
esp_avrc_tg_cb_param_t::rmt_feats (C++ member), 321
esp_avrc_tg_cb_param_t::set_abs_vol (C++ member), 322
esp_avrc_tg_cb_param_t::set_app_value (C++ member), 322
esp_avrc_tg_cb_t (C++ type), 324
esp_avrc_tg_deinit (C++ function), 317
esp_avrc_tg_get_psth_cmd_filter (C++ function), 317
esp_avrc_tg_get_rn_evt_cap (C++ function), 318
esp_avrc_tg_init (C++ function), 316
esp_avrc_tg_register_callback (C++ function), 316
esp_avrc_tg_send_rn_rsp (C++ function), 318
esp_avrc_tg_set_psth_cmd_filter (C++ function), 317
esp_avrc_tg_set_rn_evt_cap (C++ function), 318
ESP_AVRC_TRANS_LABEL_MAX (C macro), 324
ESP_BD_ADDR_HEX (C macro), 162
ESP_BD_ADDR_LEN (C macro), 162
ESP_BD_ADDR_STR (C macro), 162
esp_ble_addr_type_t (C++ type), 162
esp_ble_addr_type_t (C++ enum), 164
esp_ble_addr_type_t::BLE_ADDR_TYPE_PUBLIC (C++ enumerator), 164
esp_ble_addr_type_t::BLE_ADDR_TYPE_RANDOM (C++ enumerator), 164
esp_ble_addr_type_t::BLE_ADDR_TYPE_RPA_PUBLIC (C++ enumerator), 164
esp_ble_addr_type_t::BLE_ADDR_TYPE_RPA_RANDOM (C++ enumerator), 164
esp_ble_adv_channel_t (C++ enum), 222
esp_ble_adv_channel_t::ADV_CHNL_37 (C++ enumerator), 222
esp_ble_adv_channel_t::ADV_CHNL_38 (C++ enumerator), 222
esp_ble_adv_channel_t::ADV_CHNL_39 (C++ enumerator), 222
esp_ble_adv_channel_t::ADV_CHNL_ALL (C++ enumerator), 222
ESP_BLE_ADV_DATA_LEN_MAX (C macro), 212
esp_ble_adv_data_t (C++ struct), 194
esp_ble_adv_data_t::appearance (C++ member), 194
esp_ble_adv_data_t::flag (C++ member), 195
esp_ble_adv_data_t::include_name (C++ member), 194
esp_ble_adv_data_t::include_txpower (C++ member), 194
esp_ble_adv_data_t::manufacturer_len (C++ member), 194
esp_ble_adv_data_t::max_interval (C++ member), 194
esp_ble_adv_data_t::min_interval (C++ member), 194
esp_ble_adv_data_t::p_manufacturer_data (C++ member), 195
esp_ble_adv_data_t::p_service_data (C++ member), 195
esp_ble_adv_data_t::p_service_uuid (C++ member), 195
esp_ble_adv_data_t::service_data_len

(*C++ member*), 195
esp_ble_adv_data_t::service_uuid_len (*C++ member*), 195
esp_ble_adv_data_t::set_scan_rsp (*C++ member*), 194
esp_ble_adv_data_type (*C++ enum*), 220
esp_ble_adv_data_type::ESP_BLE_AD_MANUFACTURER_SPECIFIC_TYPE (*C++ enumerator*), 222
esp_ble_adv_data_type::ESP_BLE_AD_TYPE_128SERVICE_DATA (*C++ enumerator*), 221
esp_ble_adv_data_type::ESP_BLE_AD_TYPE_128SOL_SRV_UUID (*C++ enumerator*), 221
esp_ble_adv_data_type::ESP_BLE_AD_TYPE_128SRV_CMPL (*C++ enumerator*), 220
esp_ble_adv_data_type::ESP_BLE_AD_TYPE_128SRV_PART (*C++ enumerator*), 220
esp_ble_adv_data_type::ESP_BLE_AD_TYPE_16SERVICE_DATA (*C++ enumerator*), 221
esp_ble_adv_data_type::ESP_BLE_AD_TYPE_32SOL_SRV_UUID (*C++ enumerator*), 221
esp_ble_adv_data_type::ESP_BLE_AD_TYPE_32SRV_CMPL (*C++ enumerator*), 220
esp_ble_adv_data_type::ESP_BLE_AD_TYPE_32SRV_PART (*C++ enumerator*), 220
esp_ble_adv_data_type::ESP_BLE_AD_TYPE_ADV_INT (*C++ enumerator*), 221
esp_ble_adv_data_type::ESP_BLE_AD_TYPE_APPEARANCE (*C++ enumerator*), 221
esp_ble_adv_data_type::ESP_BLE_AD_TYPE_CHAN_MAP_UPDATE (*C++ enumerator*), 222
esp_ble_adv_data_type::ESP_BLE_AD_TYPE_DEV_CLASS (*C++ enumerator*), 220
esp_ble_adv_data_type::ESP_BLE_AD_TYPE_FLAG (*C++ enumerator*), 220
esp_ble_adv_data_type::ESP_BLE_AD_TYPE_LE_BT_HOST_FLAG (*C++ enumerator*), 221
esp_ble_adv_data_type::ESP_BLE_AD_TYPE_LE_DEV_ADDR (*C++ enumerator*), 221
esp_ble_adv_data_type::ESP_BLE_AD_TYPE_LE_ROLE (*C++ enumerator*), 221
esp_ble_adv_data_type::ESP_BLE_AD_TYPE_LE_SECURE_CONFIRM (*C++ enumerator*), 221
esp_ble_adv_data_type::ESP_BLE_AD_TYPE_LE_SECURE_RANDOM (*C++ enumerator*), 221
esp_ble_adv_data_type::ESP_BLE_AD_TYPE_LE_SUPPORT_FEATURE (*C++ enumerator*), 221
esp_ble_adv_data_type::ESP_BLE_AD_TYPE_NAME_CMPL (*C++ enumerator*), 220
esp_ble_adv_data_type::ESP_BLE_AD_TYPE_NAME_SHORT (*C++ enumerator*), 220
esp_ble_adv_data_type::ESP_BLE_AD_TYPE_PUBLIC_TARGET (*C++ enumerator*), 221
esp_ble_adv_data_type::ESP_BLE_AD_TYPE_RANDOM_TAR (*C++ enumerator*), 221
esp_ble_adv_data_type::ESP_BLE_AD_TYPE_SERVICE_DA (*C++ enumerator*), 221
esp_ble_adv_data_type::ESP_BLE_AD_TYPE_SM_OOB_FLA (*C++ enumerator*), 221
esp_ble_adv_data_type::ESP_BLE_AD_TYPE_SM_TK (*C++ enumerator*), 221
esp_ble_adv_data_type::ESP_BLE_AD_TYPE_SOL_SRV_UU (*C++ enumerator*), 221
esp_ble_adv_data_type::ESP_BLE_AD_TYPE_SPAIR_C256 (*C++ enumerator*), 221
esp_ble_adv_data_type::ESP_BLE_AD_TYPE_SPAIR_R256 (*C++ enumerator*), 221
esp_ble_adv_data_type::ESP_BLE_AD_TYPE_TRANS_DISC (*C++ enumerator*), 221
esp_ble_adv_data_type::ESP_BLE_AD_TYPE_TX_PWR (*C++ enumerator*), 220
esp_ble_adv_data_type::ESP_BLE_AD_TYPE_URI (*C++ enumerator*), 221
esp_ble_adv_filter_t (*C++ enum*), 222
esp_ble_adv_filter_t::ADV_FILTER_ALLOW_SCAN_ANY_C (*C++ enumerator*), 222
esp_ble_adv_filter_t::ADV_FILTER_ALLOW_SCAN_ANY_C (*C++ enumerator*), 222
esp_ble_adv_filter_t::ADV_FILTER_ALLOW_SCAN_WLST_ (*C++ enumerator*), 222
esp_ble_adv_filter_t::ADV_FILTER_ALLOW_SCAN_WLST_ (*C++ enumerator*), 222
ESP_BLE_ADV_FLAG_BREDR_NOT_SPT (*C macro*), 206
ESP_BLE_ADV_FLAG_DMT_CONTROLLER_SPT (*C macro*), 206
ESP_BLE_ADV_FLAG_DMT_HOST_SPT (*C macro*), 206
ESP_BLE_ADV_FLAG_GEN_DISC (*C macro*), 206
ESP_BLE_ADV_FLAG_LIMIT_DISC (*C macro*), 206
ESP_BLE_ADV_FLAG_NON_LIMIT_DISC (*C macro*), 206
esp_ble_adv_params_t (*C++ struct*), 193
esp_ble_adv_params_t::adv_filter_policy (*C++ member*), 194
esp_ble_adv_params_t::adv_int_max (*C++ member*), 193
esp_ble_adv_params_t::adv_int_min (*C++ member*), 193
esp_ble_adv_params_t::adv_type (*C++ member*), 194
esp_ble_adv_params_t::channel_map (*C++ member*), 194
esp_ble_adv_params_t::own_addr_type (*C++ member*), 194
esp_ble_adv_params_t::peer_addr (*C++ member*), 194
esp_ble_adv_params_t::peer_addr_type (*C++ member*), 194
ESP_BLE_ADV_REPORT_EXT_ADV_IND (*C*

macro), 214
ESP_BLE_ADV_REPORT_EXT_DIRECT_ADV (*C macro*), 214
ESP_BLE_ADV_REPORT_EXT_SCAN_IND (*C macro*), 214
ESP_BLE_ADV_REPORT_EXT_SCAN_RSP (*C macro*), 214
esp_ble_adv_type_t (*C++ enum*), 222
esp_ble_adv_type_t::ADV_TYPE_DIRECT_IND_HIGH (*C++ enumerator*), 222
esp_ble_adv_type_t::ADV_TYPE_DIRECT_IND_LOW (*C++ enumerator*), 222
esp_ble_adv_type_t::ADV_TYPE_IND (*C++ enumerator*), 222
esp_ble_adv_type_t::ADV_TYPE_NONCONN_IND (*C++ enumerator*), 222
esp_ble_adv_type_t::ADV_TYPE_SCAN_IND (*C++ enumerator*), 222
ESP_BLE_APPEARANCE_BLOOD_PRESSURE_ARM (*C macro*), 209
ESP_BLE_APPEARANCE_BLOOD_PRESSURE_WRIST (*C macro*), 209
ESP_BLE_APPEARANCE_CYCLING_CADENCE (*C macro*), 210
ESP_BLE_APPEARANCE_CYCLING_COMPUTER (*C macro*), 210
ESP_BLE_APPEARANCE_CYCLING_POWER (*C macro*), 211
ESP_BLE_APPEARANCE_CYCLING_SPEED (*C macro*), 210
ESP_BLE_APPEARANCE_CYCLING_SPEED_CADENCE (*C macro*), 211
ESP_BLE_APPEARANCE_GENERIC_BARCODE_SCANNER (*C macro*), 209
ESP_BLE_APPEARANCE_GENERIC_BLOOD_PRESSURE (*C macro*), 209
ESP_BLE_APPEARANCE_GENERIC_CLOCK (*C macro*), 208
ESP_BLE_APPEARANCE_GENERIC_COMPUTER (*C macro*), 208
ESP_BLE_APPEARANCE_GENERIC_CONTINUOUS_GLUCOSE_MONITOR (*C macro*), 211
ESP_BLE_APPEARANCE_GENERIC_CYCLING (*C macro*), 210
ESP_BLE_APPEARANCE_GENERIC_DISPLAY (*C macro*), 209
ESP_BLE_APPEARANCE_GENERIC_EYEGLASSES (*C macro*), 209
ESP_BLE_APPEARANCE_GENERIC_GLUCOSE (*C macro*), 210
ESP_BLE_APPEARANCE_GENERIC_HEART_RATE (*C macro*), 209
ESP_BLE_APPEARANCE_GENERIC_HID (*C macro*), 209
ESP_BLE_APPEARANCE_GENERIC_INSULIN_PUMP (*C macro*), 211
ESP_BLE_APPEARANCE_GENERIC_KEYRING (*C macro*), 209
ESP_BLE_APPEARANCE_GENERIC_MEDIA_PLAYER (*C macro*), 209
ESP_BLE_APPEARANCE_GENERIC_MEDICATION_DELIVERY (*C macro*), 211
ESP_BLE_APPEARANCE_GENERIC_OUTDOOR_SPORTS (*C macro*), 211
ESP_BLE_APPEARANCE_GENERIC_PERSONAL_MOBILITY_DEVI (*C macro*), 211
ESP_BLE_APPEARANCE_GENERIC_PHONE (*C macro*), 208
ESP_BLE_APPEARANCE_GENERIC_PULSE_OXIMETER (*C macro*), 211
ESP_BLE_APPEARANCE_GENERIC_REMOTE (*C macro*), 209
ESP_BLE_APPEARANCE_GENERIC_TAG (*C macro*), 209
ESP_BLE_APPEARANCE_GENERIC_THERMOMETER (*C macro*), 209
ESP_BLE_APPEARANCE_GENERIC_WALKING (*C macro*), 210
ESP_BLE_APPEARANCE_GENERIC_WATCH (*C macro*), 208
ESP_BLE_APPEARANCE_GENERIC_WEIGHT (*C macro*), 211
ESP_BLE_APPEARANCE_HEART_RATE_BELT (*C macro*), 209
ESP_BLE_APPEARANCE_HID_BARCODE_SCANNER (*C macro*), 210
ESP_BLE_APPEARANCE_HID_CARD_READER (*C macro*), 210
ESP_BLE_APPEARANCE_HID_DIGITAL_PEN (*C macro*), 210
ESP_BLE_APPEARANCE_HID_DIGITIZER_TABLET (*C macro*), 210
ESP_BLE_APPEARANCE_HID_GAMEPAD (*C macro*), 210
ESP_BLE_APPEARANCE_HID_JOYSTICK (*C macro*), 210
ESP_BLE_APPEARANCE_HID_KEYBOARD (*C macro*), 209
ESP_BLE_APPEARANCE_HID_MOUSE (*C macro*), 210
ESP_BLE_APPEARANCE_INSULIN_PEN (*C macro*), 211
ESP_BLE_APPEARANCE_INSULIN_PUMP_DURABLE_PUMP (*C macro*), 211
ESP_BLE_APPEARANCE_INSULIN_PUMP_PATCH_PUMP (*C macro*), 211
ESP_BLE_APPEARANCE_MOBILITY_SCOOTER (*C macro*), 211
ESP_BLE_APPEARANCE_OUTDOOR_SPORTS_LOCATION (*C macro*), 212
ESP_BLE_APPEARANCE_OUTDOOR_SPORTS_LOCATION_AND_NA (*C macro*), 212
ESP_BLE_APPEARANCE_OUTDOOR_SPORTS_LOCATION_POD (*C macro*), 212
ESP_BLE_APPEARANCE_OUTDOOR_SPORTS_LOCATION_POD_AN (*C macro*), 212

ESP_BLE_APPEARANCE_POWERED_WHEELCHAIR (*C macro*), 211
ESP_BLE_APPEARANCE_PULSE_OXIMETER_FINGERTIP (*C macro*), 211
ESP_BLE_APPEARANCE_PULSE_OXIMETER_WRIST (*C macro*), 211
ESP_BLE_APPEARANCE_SPORTS_WATCH (*C macro*), 208
ESP_BLE_APPEARANCE_THERMOMETER_EAR (*C macro*), 209
ESP_BLE_APPEARANCE_UNKNOWN (*C macro*), 208
ESP_BLE_APPEARANCE_WALKING_IN_SHOE (*C macro*), 210
ESP_BLE_APPEARANCE_WALKING_ON_HIP (*C macro*), 210
ESP_BLE_APPEARANCE_WALKING_ON_SHOE (*C macro*), 210
esp_ble_auth_cmpl_t (*C++ struct*), 200
esp_ble_auth_cmpl_t::addr_type (*C++ member*), 200
esp_ble_auth_cmpl_t::auth_mode (*C++ member*), 201
esp_ble_auth_cmpl_t::bd_addr (*C++ member*), 200
esp_ble_auth_cmpl_t::dev_type (*C++ member*), 200
esp_ble_auth_cmpl_t::fail_reason (*C++ member*), 200
esp_ble_auth_cmpl_t::key (*C++ member*), 200
esp_ble_auth_cmpl_t::key_present (*C++ member*), 200
esp_ble_auth_cmpl_t::key_type (*C++ member*), 200
esp_ble_auth_cmpl_t::success (*C++ member*), 200
esp_ble_auth_req_t (*C++ type*), 215
esp_ble_bond_dev_t (*C++ struct*), 199
esp_ble_bond_dev_t::bd_addr (*C++ member*), 199
esp_ble_bond_dev_t::bond_key (*C++ member*), 199
esp_ble_bond_key_info_t (*C++ struct*), 199
esp_ble_bond_key_info_t::key_mask (*C++ member*), 199
esp_ble_bond_key_info_t::pcsrk_key (*C++ member*), 199
esp_ble_bond_key_info_t::penc_key (*C++ member*), 199
esp_ble_bond_key_info_t::pid_key (*C++ member*), 199
esp_ble_confirm_reply (*C++ function*), 171
ESP_BLE_CONN_INT_MAX (*C macro*), 161
ESP_BLE_CONN_INT_MIN (*C macro*), 161
ESP_BLE_CONN_LATENCY_MAX (*C macro*), 161
ESP_BLE_CONN_PARAM_UNDEF (*C macro*), 161
ESP_BLE_CONN_SUP_TOUT_MAX (*C macro*), 161
ESP_BLE_CONN_SUP_TOUT_MIN (*C macro*), 161
esp_ble_conn_update_params_t (*C++ struct*), 196
esp_ble_conn_update_params_t::bda (*C++ member*), 196
esp_ble_conn_update_params_t::latency (*C++ member*), 196
esp_ble_conn_update_params_t::max_int (*C++ member*), 196
esp_ble_conn_update_params_t::min_int (*C++ member*), 196
esp_ble_conn_update_params_t::timeout (*C++ member*), 196
ESP_BLE_CSR_KEY_MASK (*C macro*), 162
esp_ble_duplicate_exceptional_info_type_t (*C++ enum*), 226
esp_ble_duplicate_exceptional_info_type_t::ESP_BL (*C++ enumerator*), 226
esp_ble_duplicate_exceptional_info_type_t::ESP_BL (*C++ enumerator*), 226
esp_ble_duplicate_exceptional_info_type_t::ESP_BL (*C++ enumerator*), 226
esp_ble_duplicate_exceptional_info_type_t::ESP_BL (*C++ enumerator*), 226
esp_ble_duplicate_exceptional_info_type_t::ESP_BL (*C++ enumerator*), 226
ESP_BLE_ENC_KEY_MASK (*C macro*), 162
esp_ble_evt_type_t (*C++ enum*), 225
esp_ble_evt_type_t::ESP_BLE_EVT_CONN_ADV (*C++ enumerator*), 225
esp_ble_evt_type_t::ESP_BLE_EVT_CONN_DIR_ADV (*C++ enumerator*), 225
esp_ble_evt_type_t::ESP_BLE_EVT_DISC_ADV (*C++ enumerator*), 226
esp_ble_evt_type_t::ESP_BLE_EVT_NON_CONN_ADV (*C++ enumerator*), 226
esp_ble_evt_type_t::ESP_BLE_EVT_SCAN_RSP (*C++ enumerator*), 226
esp_ble_ext_adv_type_mask_t (*C++ type*), 215
esp_ble_ext_scan_cfg_mask_t (*C++ type*), 216
esp_ble_ext_scan_cfg_t (*C++ struct*), 202
esp_ble_ext_scan_cfg_t::scan_interval (*C++ member*), 202
esp_ble_ext_scan_cfg_t::scan_type (*C++ member*), 202
esp_ble_ext_scan_cfg_t::scan_window (*C++ member*), 202
esp_ble_ext_scan_params_t (*C++ struct*), 202
esp_ble_ext_scan_params_t::cfg_mask (*C++ member*), 202
esp_ble_ext_scan_params_t::coded_cfg (*C++ member*), 202
esp_ble_ext_scan_params_t::filter_policy (*C++ member*), 202
esp_ble_ext_scan_params_t::own_addr_type (*C++ member*), 202
esp_ble_ext_scan_params_t::scan_duplicate

(C++ *member*), 202
esp_ble_ext_scan_params_t::uncoded_cfg
(C++ *member*), 202
esp_ble_gap_add_duplicate_scan_exceptional_device
(C++ *function*), 169
esp_ble_gap_adv_type_t (C++ *type*), 216
esp_ble_gap_all_phys_t (C++ *type*), 215
esp_ble_gap_cb_param_t (C++ *union*), 177
esp_ble_gap_cb_param_t::adv_data_cmpl
(C++ *member*), 177
esp_ble_gap_cb_param_t::adv_data_raw_cmpl
(C++ *member*), 178
esp_ble_gap_cb_param_t::adv_start_cmpl
(C++ *member*), 178
esp_ble_gap_cb_param_t::adv_stop_cmpl
(C++ *member*), 178
esp_ble_gap_cb_param_t::adv_terminate
(C++ *member*), 180
esp_ble_gap_cb_param_t::ble_adv_data_cmpl_evt_param
(C++ *struct*), 181
esp_ble_gap_cb_param_t::ble_adv_data_cmpl_evt_param::status
(C++ *member*), 181
esp_ble_gap_cb_param_t::ble_adv_data_raw_cmpl_evt_param
(C++ *struct*), 181
esp_ble_gap_cb_param_t::ble_adv_data_raw_cmpl_evt_param::status
(C++ *member*), 181
esp_ble_gap_cb_param_t::ble_adv_start_cmpl_evt_param
(C++ *struct*), 181
esp_ble_gap_cb_param_t::ble_adv_start_cmpl_evt_param::status
(C++ *member*), 181
esp_ble_gap_cb_param_t::ble_adv_stop_cmpl_evt_param
(C++ *struct*), 181
esp_ble_gap_cb_param_t::ble_adv_stop_cmpl_evt_param::status
(C++ *member*), 181
esp_ble_gap_cb_param_t::ble_adv_terminate_param
(C++ *struct*), 181
esp_ble_gap_cb_param_t::ble_adv_terminate_param::adv_instance
(C++ *member*), 182
esp_ble_gap_cb_param_t::ble_adv_terminate_param::conn_idx
(C++ *member*), 182
esp_ble_gap_cb_param_t::ble_adv_terminate_param::status
(C++ *member*), 182
esp_ble_gap_cb_param_t::ble_channel_sel_alg_evt_param
(C++ *struct*), 182
esp_ble_gap_cb_param_t::ble_channel_sel_alg_evt_param::channel_sel_alg
(C++ *member*), 182
esp_ble_gap_cb_param_t::ble_channel_sel_alg_evt_param::conn_handle
(C++ *member*), 182
esp_ble_gap_cb_param_t::ble_clear_bond_dev_cmpl_evt_param
(C++ *struct*), 182
esp_ble_gap_cb_param_t::ble_clear_bond_dev_cmpl_evt_param::status
(C++ *member*), 182
esp_ble_gap_cb_param_t::ble_ext_adv_data_set_cmpl_evt_param
(C++ *struct*), 182
esp_ble_gap_cb_param_t::ble_ext_adv_data_set_cmpl_evt_param::status
(C++ *member*), 182
esp_ble_gap_cb_param_t::ble_ext_adv_report_param
(C++ *struct*), 182
esp_ble_gap_cb_param_t::ble_ext_adv_report_param::params
(C++ *member*), 183
esp_ble_gap_cb_param_t::ble_ext_adv_scan_rsp_set_cmpl_evt_param
(C++ *struct*), 183
esp_ble_gap_cb_param_t::ble_ext_adv_scan_rsp_set_cmpl_evt_param::status
(C++ *member*), 183
esp_ble_gap_cb_param_t::ble_ext_adv_set_clear_cmpl_evt_param
(C++ *struct*), 183
esp_ble_gap_cb_param_t::ble_ext_adv_set_clear_cmpl_evt_param::status
(C++ *member*), 183
esp_ble_gap_cb_param_t::ble_ext_adv_set_params_cmpl_evt_param
(C++ *struct*), 183
esp_ble_gap_cb_param_t::ble_ext_adv_set_params_cmpl_evt_param::status
(C++ *member*), 183
esp_ble_gap_cb_param_t::ble_ext_adv_set_rand_addr_evt_param
(C++ *struct*), 183
esp_ble_gap_cb_param_t::ble_ext_adv_set_rand_addr_evt_param::status
(C++ *member*), 183
esp_ble_gap_cb_param_t::ble_ext_adv_set_remove_cmpl_evt_param
(C++ *struct*), 183
esp_ble_gap_cb_param_t::ble_ext_adv_set_remove_cmpl_evt_param::status
(C++ *member*), 183
esp_ble_gap_cb_param_t::ble_ext_adv_start_cmpl_evt_param
(C++ *struct*), 183
esp_ble_gap_cb_param_t::ble_ext_adv_start_cmpl_evt_param::status
(C++ *member*), 184
esp_ble_gap_cb_param_t::ble_ext_adv_stop_cmpl_evt_param
(C++ *struct*), 184
esp_ble_gap_cb_param_t::ble_ext_adv_stop_cmpl_evt_param::status
(C++ *member*), 184
esp_ble_gap_cb_param_t::ble_ext_conn_params_set_cmpl_evt_param
(C++ *struct*), 184
esp_ble_gap_cb_param_t::ble_ext_conn_params_set_cmpl_evt_param::status
(C++ *member*), 184
esp_ble_gap_cb_param_t::ble_ext_scan_start_cmpl_param
(C++ *struct*), 184
esp_ble_gap_cb_param_t::ble_ext_scan_start_cmpl_param::status
(C++ *member*), 184
esp_ble_gap_cb_param_t::ble_ext_scan_stop_cmpl_param
(C++ *struct*), 184
esp_ble_gap_cb_param_t::ble_ext_scan_stop_cmpl_param::status
(C++ *member*), 184
esp_ble_gap_cb_param_t::ble_get_bond_dev_cmpl_evt_param
(C++ *struct*), 184
esp_ble_gap_cb_param_t::ble_get_bond_dev_cmpl_evt_param::bond_dev
(C++ *member*), 185
esp_ble_gap_cb_param_t::ble_get_bond_dev_cmpl_evt_param::num_dev
(C++ *member*), 185
esp_ble_gap_cb_param_t::ble_get_bond_dev_cmpl_evt_param::status
(C++ *member*), 185
esp_ble_gap_cb_param_t::ble_local_privacy_cmpl_evt_param
(C++ *struct*), 185
esp_ble_gap_cb_param_t::ble_local_privacy_cmpl_evt_param::status
(C++ *member*), 185
esp_ble_gap_cb_param_t::ble_periodic_adv_add_dev_cmpl_evt_param
(C++ *struct*), 185

esp_ble_gap_cb_param_t::ble_period_adv_esp_ble_gap_cb_param_t::ble_periodic_adv_sync_est
(C++ member), 185
esp_ble_gap_cb_param_t::ble_period_adv_esp_ble_gap_cb_param_t::ble_periodic_adv_sync_los
(C++ struct), 185
esp_ble_gap_cb_param_t::ble_period_adv_esp_ble_gap_cb_param_t::ble_periodic_adv_sync_los
(C++ member), 185
esp_ble_gap_cb_param_t::ble_period_adv_esp_ble_gap_cb_param_t::ble_phy_update_cmpl_param
(C++ struct), 185
esp_ble_gap_cb_param_t::ble_period_adv_esp_ble_gap_cb_param_t::ble_phy_update_cmpl_param
(C++ member), 185
esp_ble_gap_cb_param_t::ble_period_adv_esp_ble_gap_cb_param_t::ble_phy_update_cmpl_param
(C++ struct), 185
esp_ble_gap_cb_param_t::ble_period_adv_esp_ble_gap_cb_param_t::ble_phy_update_cmpl_param
(C++ member), 186
esp_ble_gap_cb_param_t::ble_period_adv_esp_ble_gap_cb_param_t::ble_phy_update_cmpl_param
(C++ struct), 186
esp_ble_gap_cb_param_t::ble_period_adv_esp_ble_gap_cb_param_t::ble_pkt_data_length_cmpl_
(C++ member), 186
esp_ble_gap_cb_param_t::ble_period_adv_esp_ble_gap_cb_param_t::ble_pkt_data_length_cmpl_
(C++ struct), 186
esp_ble_gap_cb_param_t::ble_period_adv_esp_ble_gap_cb_param_t::ble_pkt_data_length_cmpl_
(C++ member), 186
esp_ble_gap_cb_param_t::ble_periodic_adv_esp_ble_gap_cb_param_t::ble_read_phy_cmpl_evt_par
(C++ struct), 186
esp_ble_gap_cb_param_t::ble_periodic_adv_esp_ble_gap_cb_param_t::ble_read_phy_cmpl_evt_par
(C++ member), 186
esp_ble_gap_cb_param_t::ble_periodic_adv_esp_ble_gap_cb_param_t::ble_read_phy_cmpl_evt_par
(C++ struct), 186
esp_ble_gap_cb_param_t::ble_periodic_adv_esp_ble_gap_cb_param_t::ble_read_phy_cmpl_evt_par
(C++ member), 186
esp_ble_gap_cb_param_t::ble_periodic_adv_esp_ble_gap_cb_param_t::ble_read_phy_cmpl_evt_par
(C++ struct), 186
esp_ble_gap_cb_param_t::ble_periodic_adv_esp_ble_gap_cb_param_t::ble_read_rssi_cmpl_evt_pa
(C++ member), 186
esp_ble_gap_cb_param_t::ble_periodic_adv_esp_ble_gap_cb_param_t::ble_read_rssi_cmpl_evt_pa
(C++ struct), 186
esp_ble_gap_cb_param_t::ble_periodic_adv_esp_ble_gap_cb_param_t::ble_read_rssi_cmpl_evt_pa
(C++ member), 187
esp_ble_gap_cb_param_t::ble_periodic_adv_esp_ble_gap_cb_param_t::ble_read_rssi_cmpl_evt_pa
(C++ struct), 187
esp_ble_gap_cb_param_t::ble_periodic_adv_esp_ble_gap_cb_param_t::ble_remove_bond_dev_cmpl_
(C++ member), 187
esp_ble_gap_cb_param_t::ble_periodic_adv_esp_ble_gap_cb_param_t::ble_remove_bond_dev_cmpl_
(C++ struct), 187
esp_ble_gap_cb_param_t::ble_periodic_adv_esp_ble_gap_cb_param_t::ble_remove_bond_dev_cmpl_
(C++ member), 187
esp_ble_gap_cb_param_t::ble_periodic_adv_esp_ble_gap_cb_param_t::ble_scan_param_cmpl_evt_p
(C++ member), 187
esp_ble_gap_cb_param_t::ble_periodic_adv_esp_ble_gap_cb_param_t::ble_scan_param_cmpl_evt_p
(C++ member), 187
esp_ble_gap_cb_param_t::ble_periodic_adv_esp_ble_gap_cb_param_t::ble_scan_req_received_par
(C++ struct), 187
esp_ble_gap_cb_param_t::ble_periodic_adv_esp_ble_gap_cb_param_t::ble_scan_req_received_par
(C++ member

esp_ble_gap_cb_param_t::ble_scan_result_evt_param (C++ struct), 190
esp_ble_gap_cb_param_t::ble_scan_result_evt_param::adv_data_len (C++ member), 190
esp_ble_gap_cb_param_t::ble_scan_result_evt_param::adv_data_len (C++ member), 190
esp_ble_gap_cb_param_t::ble_scan_result_evt_param::addr_type (C++ member), 190
esp_ble_gap_cb_param_t::ble_scan_result_evt_param::ble_addr_type (C++ member), 190
esp_ble_gap_cb_param_t::ble_scan_result_evt_param::dev_type (C++ member), 190
esp_ble_gap_cb_param_t::ble_scan_result_evt_param::flag (C++ member), 190
esp_ble_gap_cb_param_t::ble_scan_result_evt_param::num_resps (C++ member), 190
esp_ble_gap_cb_param_t::ble_scan_result_evt_param::rssi (C++ member), 190
esp_ble_gap_cb_param_t::ble_scan_result_evt_param::scan_rsp_len (C++ member), 190
esp_ble_gap_cb_param_t::ble_scan_rsp_data_cmpl_evt_param (C++ struct), 190
esp_ble_gap_cb_param_t::ble_scan_rsp_data_cmpl_evt_param::status (C++ member), 191
esp_ble_gap_cb_param_t::ble_scan_rsp_data_set_evt_param (C++ struct), 191
esp_ble_gap_cb_param_t::ble_scan_rsp_data_set_evt_param::status (C++ member), 191
esp_ble_gap_cb_param_t::ble_scan_start_cmpl_evt_param (C++ struct), 191
esp_ble_gap_cb_param_t::ble_scan_start_cmpl_evt_param::status (C++ member), 191
esp_ble_gap_cb_param_t::ble_scan_stop_cmpl_evt_param (C++ struct), 191
esp_ble_gap_cb_param_t::ble_scan_stop_cmpl_evt_param::status (C++ member), 191
esp_ble_gap_cb_param_t::ble_security (C++ member), 178
esp_ble_gap_cb_param_t::ble_set_channels_evt_param (C++ struct), 191
esp_ble_gap_cb_param_t::ble_set_channels_evt_param::status (C++ member), 191
esp_ble_gap_cb_param_t::ble_set_ext_scan_params_cmpl_evt_param (C++ struct), 191
esp_ble_gap_cb_param_t::ble_set_ext_scan_params_cmpl_evt_param::status (C++ member), 191
esp_ble_gap_cb_param_t::ble_set_perf_default_para_evt_param (C++ struct), 191
esp_ble_gap_cb_param_t::ble_set_perf_default_para_evt_param::status (C++ member), 192
esp_ble_gap_cb_param_t::ble_set_perf_phy_cmpl_evt_param (C++ struct), 192
esp_ble_gap_cb_param_t::ble_set_perf_phy_cmpl_evt_param::status (C++ member), 192
esp_ble_gap_cb_param_t::ble_set_rand_cmpl_evt_param (C++ struct), 192
esp_ble_gap_cb_param_t::ble_set_rand_cmpl_evt_param::status (C++ member), 192
esp_ble_gap_cb_param_t::ble_update_conn_params_evt_param (C++ struct), 192
esp_ble_gap_cb_param_t::ble_update_conn_params_evt_param::addr_type (C++ member), 192
esp_ble_gap_cb_param_t::ble_update_conn_params_evt_param::bda (C++ member), 192
esp_ble_gap_cb_param_t::ble_update_conn_params_evt_param::conn_int (C++ member), 192
esp_ble_gap_cb_param_t::ble_update_conn_params_evt_param::latency (C++ member), 192
esp_ble_gap_cb_param_t::ble_update_conn_params_evt_param::min_int (C++ member), 192
esp_ble_gap_cb_param_t::ble_update_conn_params_evt_param::status (C++ member), 192
esp_ble_gap_cb_param_t::ble_update_conn_params_evt_param::supervision_tout (C++ member), 192
esp_ble_gap_cb_param_t::ble_update_duplicate_exceptional_list_cmpl_evt_param (C++ struct), 193
esp_ble_gap_cb_param_t::ble_update_duplicate_exceptional_list_cmpl_evt_param::status (C++ member), 193
esp_ble_gap_cb_param_t::ble_update_duplicate_exceptional_list_cmpl_evt_param::subcode (C++ member), 193
esp_ble_gap_cb_param_t::ble_update_duplicate_exceptional_list_cmpl_evt_param::type (C++ member), 193
esp_ble_gap_cb_param_t::ble_update_duplicate_exceptional_list_cmpl_evt_param::update_duplicate_exceptional_list_status (C++ member), 193
esp_ble_gap_cb_param_t::ble_update_whitelist_cmpl_evt_param (C++ struct), 193
esp_ble_gap_cb_param_t::ble_update_whitelist_cmpl_evt_param::status (C++ member), 193
esp_ble_gap_cb_param_t::ble_update_whitelist_cmpl_evt_param::wl_operation (C++ member), 193
esp_ble_gap_cb_param_t::channel_sel_alg (C++ member), 180
esp_ble_gap_cb_param_t::clear_bond_dev_cmpl (C++ member), 178
esp_ble_gap_cb_param_t::ext_adv_clear (C++ member), 179
esp_ble_gap_cb_param_t::ext_adv_data_set_evt_param (C++ struct), 179
esp_ble_gap_cb_param_t::ext_adv_remove_evt_param (C++ struct), 179
esp_ble_gap_cb_param_t::ext_adv_report_evt_param (C++ struct), 181
esp_ble_gap_cb_param_t::ext_adv_set_params_evt_param (C++ struct), 179
esp_ble_gap_cb_param_t::ext_adv_set_rand_addr_evt_param (C++ struct), 179
esp_ble_gap_cb_param_t::ext_adv_start_evt_param (C++ struct), 179

esp_ble_gap_cb_param_t::ext_adv_stop (C++ member), 179
esp_ble_gap_cb_param_t::ext_conn_params_set (C++ member), 180
esp_ble_gap_cb_param_t::ext_scan_start (C++ member), 180
esp_ble_gap_cb_param_t::ext_scan_stop (C++ member), 180
esp_ble_gap_cb_param_t::get_bond_dev_cmpl (C++ member), 178
esp_ble_gap_cb_param_t::local_privacy_cmpl (C++ member), 178
esp_ble_gap_cb_param_t::period_adv_add_dev (C++ member), 180
esp_ble_gap_cb_param_t::period_adv_clear_dev (C++ member), 180
esp_ble_gap_cb_param_t::period_adv_create_sync (C++ member), 180
esp_ble_gap_cb_param_t::period_adv_data_set (C++ member), 179
esp_ble_gap_cb_param_t::period_adv_remove_dev (C++ member), 180
esp_ble_gap_cb_param_t::period_adv_report (C++ member), 181
esp_ble_gap_cb_param_t::period_adv_start (C++ member), 180
esp_ble_gap_cb_param_t::period_adv_stop (C++ member), 180
esp_ble_gap_cb_param_t::period_adv_sync_cancel (C++ member), 180
esp_ble_gap_cb_param_t::period_adv_sync_term (C++ member), 180
esp_ble_gap_cb_param_t::periodic_adv_sync_estab (C++ member), 181
esp_ble_gap_cb_param_t::periodic_adv_sync_lost (C++ member), 180
esp_ble_gap_cb_param_t::peroid_adv_set_params (C++ member), 179
esp_ble_gap_cb_param_t::phy_update (C++ member), 181
esp_ble_gap_cb_param_t::pkt_data_lenth_cmpl (C++ member), 178
esp_ble_gap_cb_param_t::read_phy (C++ member), 179
esp_ble_gap_cb_param_t::read_rssi_cmpl (C++ member), 178
esp_ble_gap_cb_param_t::remove_bond_dev_cmpl (C++ member), 178
esp_ble_gap_cb_param_t::scan_param_cmpl (C++ member), 177
esp_ble_gap_cb_param_t::scan_req_received (C++ member), 180
esp_ble_gap_cb_param_t::scan_rsp_data_cmpl (C++ member), 177
esp_ble_gap_cb_param_t::scan_rsp_data_raw_cmpl (C++ member), 178
esp_ble_gap_cb_param_t::scan_rsp_set (C++ member), 179
esp_ble_gap_cb_param_t::scan_rst (C++ member), 178
esp_ble_gap_cb_param_t::scan_start_cmpl (C++ member), 178
esp_ble_gap_cb_param_t::scan_stop_cmpl (C++ member), 178
esp_ble_gap_cb_param_t::set_ext_scan_params (C++ member), 180
esp_ble_gap_cb_param_t::set_perf_def_phy (C++ member), 179
esp_ble_gap_cb_param_t::set_perf_phy (C++ member), 179
esp_ble_gap_cb_param_t::set_rand_addr_cmpl (C++ member), 178
esp_ble_gap_cb_param_t::update_conn_params (C++ member), 178
esp_ble_gap_cb_param_t::update_duplicate_exceptio (C++ member), 179
esp_ble_gap_cb_param_t::update_whitelist_cmpl (C++ member), 179
esp_ble_gap_clean_duplicate_scan_exceptional_list (C++ function), 170
esp_ble_gap_clear_rand_addr (C++ function), 167
esp_ble_gap_clear_whitelist (C++ function), 168
esp_ble_gap_config_adv_data (C++ function), 166
esp_ble_gap_config_adv_data_raw (C++ function), 169
esp_ble_gap_config_ext_adv_data_raw (C++ function), 173
esp_ble_gap_config_ext_scan_rsp_data_raw (C++ function), 173
esp_ble_gap_config_local_icon (C++ function), 168
esp_ble_gap_config_local_privacy (C++ function), 168
esp_ble_gap_config_periodic_adv_data_raw (C++ function), 174
esp_ble_gap_config_scan_rsp_data_raw (C++ function), 169
esp_ble_gap_conn_params_t (C++ struct), 202
esp_ble_gap_conn_params_t::interval_max (C++ member), 203
esp_ble_gap_conn_params_t::interval_min (C++ member), 203
esp_ble_gap_conn_params_t::latency (C++ member), 203
esp_ble_gap_conn_params_t::max_ce_len (C++ member), 203
esp_ble_gap_conn_params_t::min_ce_len (C++ member), 203
esp_ble_gap_conn_params_t::scan_interval (C++ member), 203
esp_ble_gap_conn_params_t::scan_window (C++ member), 203
esp_ble_gap_conn_params_t::supervision_timeout

(C++ *member*), 203
esp_ble_gap_disconnect (C++ *function*), 172
ESP_BLE_GAP_EXT_ADV_DATA_COMPLETE (C *macro*), 214
ESP_BLE_GAP_EXT_ADV_DATA_INCOMPLETE (C *macro*), 214
esp_ble_gap_ext_adv_data_status_t (C++ *type*), 216
ESP_BLE_GAP_EXT_ADV_DATA_TRUNCATED (C *macro*), 214
esp_ble_gap_ext_adv_params_t (C++ *struct*), 201
esp_ble_gap_ext_adv_params_t::channel_map (C++ *member*), 201
esp_ble_gap_ext_adv_params_t::filter_policy (C++ *member*), 201
esp_ble_gap_ext_adv_params_t::interval_max (C++ *member*), 201
esp_ble_gap_ext_adv_params_t::interval_min (C++ *member*), 201
esp_ble_gap_ext_adv_params_t::max_skip (C++ *member*), 201
esp_ble_gap_ext_adv_params_t::own_addr_type (C++ *member*), 201
esp_ble_gap_ext_adv_params_t::peer_addr (C++ *member*), 201
esp_ble_gap_ext_adv_params_t::peer_addr_type (C++ *member*), 201
esp_ble_gap_ext_adv_params_t::primary_phy (C++ *member*), 201
esp_ble_gap_ext_adv_params_t::scan_req_notif (C++ *member*), 202
esp_ble_gap_ext_adv_params_t::secondary_phy (C++ *member*), 201
esp_ble_gap_ext_adv_params_t::sid (C++ *member*), 201
esp_ble_gap_ext_adv_params_t::tx_power (C++ *member*), 201
esp_ble_gap_ext_adv_params_t::type (C++ *member*), 201
esp_ble_gap_ext_adv_reprot_t (C++ *struct*), 204
esp_ble_gap_ext_adv_reprot_t::addr (C++ *member*), 204
esp_ble_gap_ext_adv_reprot_t::addr_type (C++ *member*), 204
esp_ble_gap_ext_adv_reprot_t::adv_data (C++ *member*), 205
esp_ble_gap_ext_adv_reprot_t::adv_data_len (C++ *member*), 205
esp_ble_gap_ext_adv_reprot_t::data_status (C++ *member*), 205
esp_ble_gap_ext_adv_reprot_t::dir_addr (C++ *member*), 205
esp_ble_gap_ext_adv_reprot_t::dir_addr_type (C++ *member*), 205
esp_ble_gap_ext_adv_reprot_t::event_type (C++ *member*), 204
esp_ble_gap_ext_adv_reprot_t::per_adv_interval (C++ *member*), 205
esp_ble_gap_ext_adv_reprot_t::primary_phy (C++ *member*), 204
esp_ble_gap_ext_adv_reprot_t::rssi (C++ *member*), 205
esp_ble_gap_ext_adv_reprot_t::secondly_phy (C++ *member*), 204
esp_ble_gap_ext_adv_reprot_t::sid (C++ *member*), 205
esp_ble_gap_ext_adv_reprot_t::tx_power (C++ *member*), 205
esp_ble_gap_ext_adv_set_clear (C++ *function*), 174
esp_ble_gap_ext_adv_set_params (C++ *function*), 173
esp_ble_gap_ext_adv_set_rand_addr (C++ *function*), 173
esp_ble_gap_ext_adv_set_remove (C++ *function*), 174
esp_ble_gap_ext_adv_start (C++ *function*), 174
esp_ble_gap_ext_adv_stop (C++ *function*), 174
esp_ble_gap_ext_adv_t (C++ *struct*), 203
esp_ble_gap_ext_adv_t::duration (C++ *member*), 203
esp_ble_gap_ext_adv_t::instance (C++ *member*), 203
esp_ble_gap_ext_adv_t::max_events (C++ *member*), 203
ESP_BLE_GAP_EXT_SCAN_CFG_CODE_MASK (C *macro*), 214
ESP_BLE_GAP_EXT_SCAN_CFG_UNCODE_MASK (C *macro*), 214
esp_ble_gap_get_local_used_addr (C++ *function*), 169
esp_ble_gap_get_whitelist_size (C++ *function*), 168
ESP_BLE_GAP_NO_PREFER_RECEIVE_PHY (C *macro*), 213
ESP_BLE_GAP_NO_PREFER_TRANSMIT_PHY (C *macro*), 213
esp_ble_gap_periodic_adv_add_dev_to_list (C++ *function*), 175
esp_ble_gap_periodic_adv_clear_dev (C++ *function*), 176
esp_ble_gap_periodic_adv_create_sync (C++ *function*), 175
esp_ble_gap_periodic_adv_params_t (C++ *struct*), 203
esp_ble_gap_periodic_adv_params_t::interval_max (C++ *member*), 203
esp_ble_gap_periodic_adv_params_t::interval_min (C++ *member*), 203
esp_ble_gap_periodic_adv_params_t::properties (C++ *member*), 204
esp_ble_gap_periodic_adv_remove_dev_from_list

(*C++ function*), 176
esp_ble_gap_periodic_adv_report_t (*C++ struct*), 205
esp_ble_gap_periodic_adv_report_t::data (*C++ member*), 206
esp_ble_gap_periodic_adv_report_t::data_length (*C++ member*), 205
esp_ble_gap_periodic_adv_report_t::data_status (*C++ member*), 205
esp_ble_gap_periodic_adv_report_t::rssi (*C++ member*), 205
esp_ble_gap_periodic_adv_report_t::sync_handle (*C++ member*), 205
esp_ble_gap_periodic_adv_report_t::tx_power (*C++ member*), 205
esp_ble_gap_periodic_adv_set_params (*C++ function*), 174
esp_ble_gap_periodic_adv_start (*C++ function*), 175
esp_ble_gap_periodic_adv_stop (*C++ function*), 175
esp_ble_gap_periodic_adv_sync_cancel (*C++ function*), 175
esp_ble_gap_periodic_adv_sync_estab_t (*C++ struct*), 206
esp_ble_gap_periodic_adv_sync_estab_t::adv_addr (*C++ member*), 206
esp_ble_gap_periodic_adv_sync_estab_t::adv_addr_type (*C++ member*), 206
esp_ble_gap_periodic_adv_sync_estab_t::adv_clk_accuracy (*C++ member*), 206
esp_ble_gap_periodic_adv_sync_estab_t::adv_phy (*C++ member*), 206
esp_ble_gap_periodic_adv_sync_estab_t::interval (*C++ member*), 206
esp_ble_gap_periodic_adv_sync_estab_t::service_data (*C++ member*), 206
esp_ble_gap_periodic_adv_sync_estab_t::status (*C++ member*), 206
esp_ble_gap_periodic_adv_sync_estab_t::sync_handle (*C++ member*), 206
esp_ble_gap_periodic_adv_sync_params_t (*C++ struct*), 204
esp_ble_gap_periodic_adv_sync_params_t::cte_type (*C++ member*), 204
esp_ble_gap_periodic_adv_sync_params_t::filter_policy (*C++ member*), 204
esp_ble_gap_periodic_adv_sync_params_t::max_skip (*C++ member*), 204
esp_ble_gap_periodic_adv_sync_params_t::sync_timeout (*C++ member*), 204
esp_ble_gap_periodic_adv_sync_terminate (*C++ function*), 175
ESP_BLE_GAP_PHY_1M (*C macro*), 213
ESP_BLE_GAP_PHY_1M_PREF_MASK (*C macro*), 213
ESP_BLE_GAP_PHY_2M (*C macro*), 213
ESP_BLE_GAP_PHY_2M_PREF_MASK (*C macro*), 213
ESP_BLE_GAP_PHY_CODED (*C macro*), 213
ESP_BLE_GAP_PHY_CODED_PREF_MASK (*C macro*), 214
esp_ble_gap_phy_mask_t (*C++ type*), 215
ESP_BLE_GAP_PHY_OPTIONS_NO_PREF (*C macro*), 214
ESP_BLE_GAP_PHY_OPTIONS_PREF_S2_CODING (*C macro*), 214
ESP_BLE_GAP_PHY_OPTIONS_PREF_S8_CODING (*C macro*), 214
esp_ble_gap_phy_t (*C++ type*), 215
esp_ble_gap_prefer_ext_connect_params_set (*C++ function*), 176
esp_ble_gap_prefer_phy_options_t (*C++ type*), 215
ESP_BLE_GAP_PRI_PHY_1M (*C macro*), 213
ESP_BLE_GAP_PRI_PHY_CODED (*C macro*), 213
esp_ble_gap_pri_phy_t (*C++ type*), 215
esp_ble_gap_read_phy (*C++ function*), 172
esp_ble_gap_read_rssi (*C++ function*), 169
esp_ble_gap_register_callback (*C++ function*), 166
esp_ble_gap_remove_duplicate_scan_exceptional_dev (*C++ function*), 170
esp_ble_gap_security_rsp (*C++ function*), 171
esp_ble_gap_set_device_name (*C++ function*), 169
ESP_BLE_GAP_SET_EXT_ADV_PROP_ANON_ADV (*C macro*), 212
ESP_BLE_GAP_SET_EXT_ADV_PROP_CONNECTABLE (*C macro*), 212
ESP_BLE_GAP_SET_EXT_ADV_PROP_DIRECTED (*C macro*), 212
ESP_BLE_GAP_SET_EXT_ADV_PROP_HD_DIRECTED (*C macro*), 212
ESP_BLE_GAP_SET_EXT_ADV_PROP_INCLUDE_TX_PWR (*C macro*), 213
ESP_BLE_GAP_SET_EXT_ADV_PROP_LEGACY (*C macro*), 212
ESP_BLE_GAP_SET_EXT_ADV_PROP_LEGACY_HD_DIR (*C macro*), 213
ESP_BLE_GAP_SET_EXT_ADV_PROP_LEGACY_IND (*C macro*), 213
ESP_BLE_GAP_SET_EXT_ADV_PROP_LEGACY_LD_DIR (*C macro*), 213
ESP_BLE_GAP_SET_EXT_ADV_PROP_LEGACY_NONCONN (*C macro*), 213
ESP_BLE_GAP_SET_EXT_ADV_PROP_LEGACY_SCAN (*C macro*), 213
ESP_BLE_GAP_SET_EXT_ADV_PROP_MASK (*C macro*), 213
ESP_BLE_GAP_SET_EXT_ADV_PROP_NONCONN_NONSCANNABLE

(*C macro*), 212
ESP_BLE_GAP_SET_EXT_ADV_PROP_SCANNABLE (*C macro*), 212
esp_ble_gap_set_ext_scan_params (*C++ function*), 175
esp_ble_gap_set_pkt_data_len (*C++ function*), 167
esp_ble_gap_set_prefer_conn_params (*C++ function*), 168
esp_ble_gap_set_prefered_default_phy (*C++ function*), 172
esp_ble_gap_set_prefered_phy (*C++ function*), 173
esp_ble_gap_set_rand_addr (*C++ function*), 167
esp_ble_gap_set_scan_params (*C++ function*), 166
esp_ble_gap_set_security_param (*C++ function*), 170
esp_ble_gap_start_advertising (*C++ function*), 167
esp_ble_gap_start_ext_scan (*C++ function*), 175
esp_ble_gap_start_scanning (*C++ function*), 167
esp_ble_gap_stop_advertising (*C++ function*), 167
esp_ble_gap_stop_ext_scan (*C++ function*), 175
esp_ble_gap_stop_scanning (*C++ function*), 167
ESP_BLE_GAP_SYNC_POLICY_BY_ADV_INFO (*C macro*), 214
ESP_BLE_GAP_SYNC_POLICY_BY_PERIODIC_LIST (*C macro*), 214
esp_ble_gap_sync_t (*C++ type*), 216
esp_ble_gap_update_conn_params (*C++ function*), 167
esp_ble_gap_update_whitelist (*C++ function*), 168
esp_ble_gattc_app_register (*C++ function*), 257
esp_ble_gattc_app_unregister (*C++ function*), 257
esp_ble_gattc_aux_open (*C++ function*), 258
esp_ble_gattc_cache_assoc (*C++ function*), 264
esp_ble_gattc_cache_clean (*C++ function*), 265
esp_ble_gattc_cache_get_addr_list (*C++ function*), 264
esp_ble_gattc_cache_refresh (*C++ function*), 264
esp_ble_gattc_cb_param_t (*C++ union*), 265
esp_ble_gattc_cb_param_t::cfg_mtu (*C++ member*), 265
esp_ble_gattc_cb_param_t::close (*C++ member*), 265
esp_ble_gattc_cb_param_t::congest (*C++ member*), 266
esp_ble_gattc_cb_param_t::connect (*C++ member*), 266
esp_ble_gattc_cb_param_t::dis_srvc_cmpl (*C++ member*), 266
esp_ble_gattc_cb_param_t::disconnect (*C++ member*), 266
esp_ble_gattc_cb_param_t::exec_cmpl (*C++ member*), 265
esp_ble_gattc_cb_param_t::gattc_cfg_mtu_evt_param (*C++ struct*), 266
esp_ble_gattc_cb_param_t::gattc_cfg_mtu_evt_param (*C++ member*), 266
esp_ble_gattc_cb_param_t::gattc_cfg_mtu_evt_param (*C++ member*), 266
esp_ble_gattc_cb_param_t::gattc_cfg_mtu_evt_param (*C++ member*), 266
esp_ble_gattc_cb_param_t::gattc_close_evt_param (*C++ struct*), 266
esp_ble_gattc_cb_param_t::gattc_close_evt_param:: (*C++ member*), 267
esp_ble_gattc_cb_param_t::gattc_close_evt_param:: (*C++ member*), 267
esp_ble_gattc_cb_param_t::gattc_close_evt_param:: (*C++ member*), 267
esp_ble_gattc_cb_param_t::gattc_close_evt_param:: (*C++ member*), 267
esp_ble_gattc_cb_param_t::gattc_congest_evt_param (*C++ struct*), 267
esp_ble_gattc_cb_param_t::gattc_congest_evt_param (*C++ member*), 267
esp_ble_gattc_cb_param_t::gattc_congest_evt_param (*C++ member*), 267
esp_ble_gattc_cb_param_t::gattc_connect_evt_param (*C++ struct*), 267
esp_ble_gattc_cb_param_t::gattc_connect_evt_param (*C++ member*), 267
esp_ble_gattc_cb_param_t::gattc_connect_evt_param (*C++ member*), 267
esp_ble_gattc_cb_param_t::gattc_connect_evt_param (*C++ member*), 267
esp_ble_gattc_cb_param_t::gattc_connect_evt_param (*C++ member*), 267
esp_ble_gattc_cb_param_t::gattc_dis_srvc_cmpl_evt (*C++ struct*), 267
esp_ble_gattc_cb_param_t::gattc_dis_srvc_cmpl_evt (*C++ member*), 268
esp_ble_gattc_cb_param_t::gattc_dis_srvc_cmpl_evt (*C++ member*), 268
esp_ble_gattc_cb_param_t::gattc_disconnect_evt_pa (*C++ struct*), 268
esp_ble_gattc_cb_param_t::gattc_disconnect_evt_pa (*C++ member*), 268
esp_ble_gattc_cb_param_t::gattc_disconnect_evt_pa (*C++ member*), 268
esp_ble_gattc_cb_param_t::gattc_disconnect_evt_pa (*C++ member*), 268

esp_ble_gattc_cb_param_t::gattc_disconnect_cmpl_evt_param::conn_id (C++ member), 268
esp_ble_gattc_cb_param_t::gattc_exec_cmpl_evt_param (C++ struct), 268
esp_ble_gattc_cb_param_t::gattc_exec_cmpl_evt_param::conn_id (C++ member), 268
esp_ble_gattc_cb_param_t::gattc_exec_cmpl_evt_param::status (C++ member), 268
esp_ble_gattc_cb_param_t::gattc_get_addr_list_evt_param (C++ struct), 268
esp_ble_gattc_cb_param_t::gattc_get_addr_list_evt_param::addr_list (C++ member), 268
esp_ble_gattc_cb_param_t::gattc_get_addr_list_evt_param::addr_list_len (C++ member), 268
esp_ble_gattc_cb_param_t::gattc_get_addr_list_evt_param::status (C++ member), 268
esp_ble_gattc_cb_param_t::gattc_notify_evt_param (C++ struct), 269
esp_ble_gattc_cb_param_t::gattc_notify_evt_param::conn_id (C++ member), 269
esp_ble_gattc_cb_param_t::gattc_notify_evt_param::handle (C++ member), 269
esp_ble_gattc_cb_param_t::gattc_notify_evt_param::is_notify (C++ member), 269
esp_ble_gattc_cb_param_t::gattc_notify_evt_param::remote_bda (C++ member), 269
esp_ble_gattc_cb_param_t::gattc_notify_evt_param::value (C++ member), 269
esp_ble_gattc_cb_param_t::gattc_notify_evt_param::value_len (C++ member), 269
esp_ble_gattc_cb_param_t::gattc_open_evt_param (C++ struct), 269
esp_ble_gattc_cb_param_t::gattc_open_evt_param::conn_id (C++ member), 269
esp_ble_gattc_cb_param_t::gattc_open_evt_param::gatt_if (C++ member), 269
esp_ble_gattc_cb_param_t::gattc_open_evt_param::mtu (C++ member), 269
esp_ble_gattc_cb_param_t::gattc_open_evt_param::remote_bda (C++ member), 269
esp_ble_gattc_cb_param_t::gattc_open_evt_param::status (C++ member), 269
esp_ble_gattc_cb_param_t::gattc_queue_full_evt_param (C++ struct), 269
esp_ble_gattc_cb_param_t::gattc_queue_full_evt_param::conn_id (C++ member), 270
esp_ble_gattc_cb_param_t::gattc_queue_full_evt_param::is_full (C++ member), 270
esp_ble_gattc_cb_param_t::gattc_queue_full_evt_param::status (C++ member), 270
esp_ble_gattc_cb_param_t::gattc_read_char_evt_param (C++ struct), 270
esp_ble_gattc_cb_param_t::gattc_read_char_evt_param::conn_id (C++ member), 270
esp_ble_gattc_cb_param_t::gattc_read_char_evt_param::handle (C++ member), 270
esp_ble_gattc_cb_param_t::gattc_read_char_evt_param::status (C++ member), 270
esp_ble_gattc_cb_param_t::gattc_reg_evt_param (C++ struct), 270
esp_ble_gattc_cb_param_t::gattc_reg_evt_param::app_id (C++ member), 270
esp_ble_gattc_cb_param_t::gattc_reg_evt_param::status (C++ member), 270
esp_ble_gattc_cb_param_t::gattc_reg_for_notify_evt_param (C++ struct), 270
esp_ble_gattc_cb_param_t::gattc_reg_for_notify_evt_param::addr_list (C++ member), 271
esp_ble_gattc_cb_param_t::gattc_reg_for_notify_evt_param::num_addr (C++ member), 271
esp_ble_gattc_cb_param_t::gattc_search_cmpl_evt_param (C++ struct), 271
esp_ble_gattc_cb_param_t::gattc_search_cmpl_evt_param::conn_id (C++ member), 271
esp_ble_gattc_cb_param_t::gattc_search_cmpl_evt_param::searched_service_source (C++ member), 271
esp_ble_gattc_cb_param_t::gattc_search_cmpl_evt_param::status (C++ member), 271
esp_ble_gattc_cb_param_t::gattc_search_res_evt_param (C++ struct), 271
esp_ble_gattc_cb_param_t::gattc_search_res_evt_param::conn_id (C++ member), 271
esp_ble_gattc_cb_param_t::gattc_search_res_evt_param::end_handle (C++ member), 271
esp_ble_gattc_cb_param_t::gattc_search_res_evt_param::start_handle (C++ member), 271
esp_ble_gattc_cb_param_t::gattc_search_res_evt_param::srvc_id (C++ member), 271
esp_ble_gattc_cb_param_t::gattc_set_assoc_addr_cmpl_evt_param (C++ struct), 271
esp_ble_gattc_cb_param_t::gattc_set_assoc_addr_cmpl_evt_param::conn_id (C++ member), 272
esp_ble_gattc_cb_param_t::gattc_srvc_chg_evt_param (C++ struct), 272
esp_ble_gattc_cb_param_t::gattc_srvc_chg_evt_param::remote_bda (C++ member), 272
esp_ble_gattc_cb_param_t::gattc_unreg_for_notify_evt_param (C++ struct), 272
esp_ble_gattc_cb_param_t::gattc_unreg_for_notify_evt_param::conn_id (C++ member), 272
esp_ble_gattc_cb_param_t::gattc_unreg_for_notify_evt_param::handle (C++ member), 272
esp_ble_gattc_cb_param_t::gattc_unreg_for_notify_evt_param::status (C++ member), 272
esp_ble_gattc_cb_param_t::gattc_write_evt_param (C++ struct), 272
esp_ble_gattc_cb_param_t::gattc_write_evt_param::conn_id (C++ member), 272
esp_ble_gattc_cb_param_t::gattc_write_evt_param::handle (C++ member), 272
esp_ble_gattc_cb_param_t::gattc_write_evt_param::status (C++ member), 272
esp_ble_gattc_cb_param_t::gattc_write_evt_param::value_type (C++ member), 272

esp_ble_gattc_cb_param_t::get_addr_list (C++ member), 266
esp_ble_gattc_cb_param_t::notify (C++ member), 265
esp_ble_gattc_cb_param_t::open (C++ member), 265
esp_ble_gattc_cb_param_t::queue_full (C++ member), 266
esp_ble_gattc_cb_param_t::read (C++ member), 265
esp_ble_gattc_cb_param_t::reg (C++ member), 265
esp_ble_gattc_cb_param_t::reg_for_notify (C++ member), 266
esp_ble_gattc_cb_param_t::search_cmpl (C++ member), 265
esp_ble_gattc_cb_param_t::search_res (C++ member), 265
esp_ble_gattc_cb_param_t::set_assoc_cmp (C++ member), 266
esp_ble_gattc_cb_param_t::srvc_chg (C++ member), 266
esp_ble_gattc_cb_param_t::unreg_for_notify (C++ member), 266
esp_ble_gattc_cb_param_t::write (C++ member), 265
esp_ble_gattc_close (C++ function), 258
esp_ble_gattc_execute_write (C++ function), 263
esp_ble_gattc_get_all_char (C++ function), 259
esp_ble_gattc_get_all_descr (C++ function), 259
esp_ble_gattc_get_attr_count (C++ function), 261
esp_ble_gattc_get_char_by_uuid (C++ function), 259
esp_ble_gattc_get_db (C++ function), 261
esp_ble_gattc_get_descr_by_char_handle (C++ function), 260
esp_ble_gattc_get_descr_by_uuid (C++ function), 260
esp_ble_gattc_get_include_service (C++ function), 260
esp_ble_gattc_get_service (C++ function), 258
esp_ble_gattc_open (C++ function), 258
esp_ble_gattc_prepare_write (C++ function), 263
esp_ble_gattc_prepare_write_char_descr (C++ function), 263
esp_ble_gattc_read_by_type (C++ function), 262
esp_ble_gattc_read_char (C++ function), 261
esp_ble_gattc_read_char_descr (C++ function), 262
esp_ble_gattc_read_multiple (C++ function), 262
esp_ble_gattc_register_callback (C++ function), 257
esp_ble_gattc_register_for_notify (C++ function), 264
esp_ble_gattc_search_service (C++ function), 258
esp_ble_gattc_send_mtu_req (C++ function), 258
esp_ble_gattc_unregister_for_notify (C++ function), 264
esp_ble_gattc_write_char (C++ function), 262
esp_ble_gattc_write_char_descr (C++ function), 263
esp_ble_gatts_add_char (C++ function), 244
esp_ble_gatts_add_char_descr (C++ function), 244
esp_ble_gatts_add_included_service (C++ function), 243
esp_ble_gatts_app_register (C++ function), 243
esp_ble_gatts_app_unregister (C++ function), 243
esp_ble_gatts_cb_param_t (C++ union), 246
esp_ble_gatts_cb_param_t::add_attr_tab (C++ member), 247
esp_ble_gatts_cb_param_t::add_char (C++ member), 247
esp_ble_gatts_cb_param_t::add_char_descr (C++ member), 247
esp_ble_gatts_cb_param_t::add_incl_srvc (C++ member), 246
esp_ble_gatts_cb_param_t::cancel_open (C++ member), 247
esp_ble_gatts_cb_param_t::close (C++ member), 247
esp_ble_gatts_cb_param_t::conf (C++ member), 246
esp_ble_gatts_cb_param_t::congest (C++ member), 247
esp_ble_gatts_cb_param_t::connect (C++ member), 247
esp_ble_gatts_cb_param_t::create (C++ member), 246
esp_ble_gatts_cb_param_t::del (C++ member), 247
esp_ble_gatts_cb_param_t::disconnect (C++ member), 247
esp_ble_gatts_cb_param_t::exec_write (C++ member), 246
esp_ble_gatts_cb_param_t::gatts_add_attr_tab_evt_ (C++ struct), 247
esp_ble_gatts_cb_param_t::gatts_add_attr_tab_evt_ (C++ member), 248
esp_ble_gatts_cb_param_t::gatts_add_attr_tab_evt_ (C++ member), 248
esp_ble_gatts_cb_param_t::gatts_add_attr_tab_evt_ (C++ member), 248

esp_ble_gatts_cb_param_t::gatts_add_attr_tab_evt_param::num_handle (*C++ member*), 248
esp_ble_gatts_cb_param_t::gatts_add_attr_tab_evt_param::status (*C++ member*), 248
esp_ble_gatts_cb_param_t::gatts_add_char_10_32_evt_param (*C++ struct*), 248
esp_ble_gatts_cb_param_t::gatts_add_char_10_32_evt_param::attr_handle (*C++ member*), 248
esp_ble_gatts_cb_param_t::gatts_add_char_10_32_evt_param::char_uuid (*C++ member*), 248
esp_ble_gatts_cb_param_t::gatts_add_char_10_32_evt_param::service_handle (*C++ member*), 248
esp_ble_gatts_cb_param_t::gatts_add_char_10_32_evt_param::status (*C++ member*), 248
esp_ble_gatts_cb_param_t::gatts_add_char_evt_param (*C++ struct*), 248
esp_ble_gatts_cb_param_t::gatts_add_char_evt_param::attr_handle (*C++ member*), 248
esp_ble_gatts_cb_param_t::gatts_add_char_evt_param::char_uuid (*C++ member*), 248
esp_ble_gatts_cb_param_t::gatts_add_char_evt_param::service_handle (*C++ member*), 248
esp_ble_gatts_cb_param_t::gatts_add_char_evt_param::status (*C++ member*), 248
esp_ble_gatts_cb_param_t::gatts_add_incl_srvc_evt_param (*C++ struct*), 249
esp_ble_gatts_cb_param_t::gatts_add_incl_srvc_evt_param::attr_handle (*C++ member*), 249
esp_ble_gatts_cb_param_t::gatts_add_incl_srvc_evt_param::service_handle (*C++ member*), 249
esp_ble_gatts_cb_param_t::gatts_add_incl_srvc_evt_param::status (*C++ member*), 249
esp_ble_gatts_cb_param_t::gatts_cancel_open_evt_param (*C++ struct*), 249
esp_ble_gatts_cb_param_t::gatts_cancel_open_evt_param::status (*C++ member*), 249
esp_ble_gatts_cb_param_t::gatts_close_evt_param (*C++ struct*), 249
esp_ble_gatts_cb_param_t::gatts_close_evt_param::conn_id (*C++ member*), 249
esp_ble_gatts_cb_param_t::gatts_close_evt_param::status (*C++ member*), 249
esp_ble_gatts_cb_param_t::gatts_conf_evt_param (*C++ struct*), 249
esp_ble_gatts_cb_param_t::gatts_conf_evt_param::conn_id (*C++ member*), 249
esp_ble_gatts_cb_param_t::gatts_conf_evt_param::len (*C++ member*), 249
esp_ble_gatts_cb_param_t::gatts_conf_evt_param::status (*C++ member*), 249
esp_ble_gatts_cb_param_t::gatts_conf_evt_param::value (*C++ member*), 250
esp_ble_gatts_cb_param_t::gatts_congest_evt_param (*C++ struct*), 250
esp_ble_gatts_cb_param_t::gatts_congest_evt_param::conn_id (*C++ member*), 250
esp_ble_gatts_cb_param_t::gatts_congest_evt_param::congested (*C++ member*), 250
esp_ble_gatts_cb_param_t::gatts_connect_evt_param (*C++ struct*), 250
esp_ble_gatts_cb_param_t::gatts_connect_evt_param::conn_id (*C++ member*), 250
esp_ble_gatts_cb_param_t::gatts_connect_evt_param::link_role (*C++ member*), 250
esp_ble_gatts_cb_param_t::gatts_connect_evt_param::remote_bda (*C++ member*), 250
esp_ble_gatts_cb_param_t::gatts_create_evt_param (*C++ struct*), 250
esp_ble_gatts_cb_param_t::gatts_create_evt_param::service_handle (*C++ member*), 250
esp_ble_gatts_cb_param_t::gatts_create_evt_param::service_id (*C++ member*), 251
esp_ble_gatts_cb_param_t::gatts_delete_evt_param (*C++ struct*), 251
esp_ble_gatts_cb_param_t::gatts_delete_evt_param::service_handle (*C++ member*), 251
esp_ble_gatts_cb_param_t::gatts_delete_evt_param::status (*C++ member*), 251
esp_ble_gatts_cb_param_t::gatts_disconnect_evt_param (*C++ struct*), 251
esp_ble_gatts_cb_param_t::gatts_disconnect_evt_param::conn_id (*C++ member*), 251
esp_ble_gatts_cb_param_t::gatts_disconnect_evt_param::reason (*C++ member*), 251
esp_ble_gatts_cb_param_t::gatts_exec_write_evt_param (*C++ struct*), 251
esp_ble_gatts_cb_param_t::gatts_exec_write_evt_param::conn_id (*C++ member*), 251
esp_ble_gatts_cb_param_t::gatts_exec_write_evt_param::exec_write_flag (*C++ member*), 251
esp_ble_gatts_cb_param_t::gatts_exec_write_evt_param::status (*C++ member*), 251
esp_ble_gatts_cb_param_t::gatts_mtu_evt_param (*C++ struct*), 252
esp_ble_gatts_cb_param_t::gatts_mtu_evt_param::conn_id (*C++ member*), 252
esp_ble_gatts_cb_param_t::gatts_mtu_evt_param::mtu (*C++ member*), 252
esp_ble_gatts_cb_param_t::gatts_open_evt_param (*C++ struct*), 252
esp_ble_gatts_cb_param_t::gatts_open_evt_param::status (*C++ member*), 252
esp_ble_gatts_cb_param_t::gatts_read_evt_param (*C++ struct*), 252

esp_ble_gatts_cb_param_t::gatts_read_evt_param::handle (C++ member), 252
esp_ble_gatts_cb_param_t::gatts_read_evt_param::is_long (C++ member), 252
esp_ble_gatts_cb_param_t::gatts_read_evt_param::need_rsp (C++ member), 253
esp_ble_gatts_cb_param_t::gatts_read_evt_param::offset (C++ member), 252
esp_ble_gatts_cb_param_t::gatts_read_evt_param::trans_id (C++ member), 252
esp_ble_gatts_cb_param_t::gatts_reg_evt_param (C++ struct), 253
esp_ble_gatts_cb_param_t::gatts_reg_evt_param::app_id (C++ member), 253
esp_ble_gatts_cb_param_t::gatts_reg_evt_param::status (C++ member), 253
esp_ble_gatts_cb_param_t::gatts_rsp_evt_param (C++ struct), 253
esp_ble_gatts_cb_param_t::gatts_rsp_evt_param::handle (C++ member), 253
esp_ble_gatts_cb_param_t::gatts_rsp_evt_param::status (C++ member), 253
esp_ble_gatts_cb_param_t::gatts_send_service_change_evt_param (C++ struct), 253
esp_ble_gatts_cb_param_t::gatts_send_service_change_evt_param::status (C++ member), 253
esp_ble_gatts_cb_param_t::gatts_set_attr_val_evt_param (C++ struct), 253
esp_ble_gatts_cb_param_t::gatts_set_attr_val_evt_param::attr_handle (C++ member), 253
esp_ble_gatts_cb_param_t::gatts_set_attr_val_evt_param::status (C++ member), 253
esp_ble_gatts_cb_param_t::gatts_start_evt_param (C++ struct), 254
esp_ble_gatts_cb_param_t::gatts_start_evt_param::service_handle (C++ member), 254
esp_ble_gatts_cb_param_t::gatts_start_evt_param::status (C++ member), 254
esp_ble_gatts_cb_param_t::gatts_stop_evt_param (C++ struct), 254
esp_ble_gatts_cb_param_t::gatts_stop_evt_param::service_handle (C++ member), 254
esp_ble_gatts_cb_param_t::gatts_stop_evt_param::status (C++ member), 254
esp_ble_gatts_cb_param_t::gatts_write_evt_param (C++ struct), 254
esp_ble_gatts_cb_param_t::gatts_write_evt_param::handle (C++ member), 254
esp_ble_gatts_cb_param_t::gatts_write_evt_param::is_prep (C++ member), 254
esp_ble_gatts_cb_param_t::gatts_write_evt_param::len (C++ member), 254
esp_ble_gatts_cb_param_t::gatts_write_evt_param::need_rsp (C++ member), 254
esp_ble_gatts_cb_param_t::gatts_write_evt_param::offset (C++ member), 255
esp_ble_gatts_cb_param_t::gatts_write_evt_param::trans_id (C++ member), 255
esp_ble_gatts_cb_param_t::mtu (C++ member), 246
esp_ble_gatts_cb_param_t::open (C++ member), 247
esp_ble_gatts_cb_param_t::read (C++ member), 246
esp_ble_gatts_cb_param_t::reg (C++ member), 246
esp_ble_gatts_cb_param_t::rsp (C++ member), 247
esp_ble_gatts_cb_param_t::service_change (C++ member), 247
esp_ble_gatts_cb_param_t::set_attr_val (C++ member), 247
esp_ble_gatts_cb_param_t::start (C++ member), 247
esp_ble_gatts_cb_param_t::stop (C++ member), 247
esp_ble_gatts_cb_param_t::write (C++ member), 246
esp_ble_gatts_set_attr_value (C++ function), 246
esp_ble_gatts_create_attr_tab (C++ function), 243
esp_ble_gatts_create_service (C++ function), 243
esp_ble_gatts_delete_service (C++ function), 244
esp_ble_gatts_get_attr_value (C++ function), 245
esp_ble_gatts_open (C++ function), 245
esp_ble_gatts_register_callback (C++ function), 243
esp_ble_gatts_send_indicate (C++ function), 244
esp_ble_gatts_send_response (C++ function), 245
esp_ble_gatts_send_service_change_indication (C++ function), 246
esp_ble_gatts_set_attr_value (C++ function), 245
esp_ble_gatts_start_service (C++ function), 244
esp_ble_gatts_stop_service (C++ function), 244
esp_ble_gattc_cb_param_t::disconnect (C++ member), 254
esp_ble_gattc_cb_param_t::dis_srvc_cmpl (C++ member), 254
esp_ble_gattc_cb_param_t::event_ble_device_list (C++ function), 171

esp_ble_get_bond_device_num (*C++ function*), 171
esp_ble_get_current_conn_params (*C++ function*), 172
ESP_BLE_ID_KEY_MASK (*C macro*), 162
esp_ble_io_cap_t (*C++ type*), 215
ESP_BLE_IS_VALID_PARAM (*C macro*), 161
esp_ble_key_mask_t (*C++ type*), 162
esp_ble_key_t (*C++ struct*), 199
esp_ble_key_t::bd_addr (*C++ member*), 199
esp_ble_key_t::key_type (*C++ member*), 199
esp_ble_key_t::p_key_value (*C++ member*), 200
esp_ble_key_type_t (*C++ type*), 215
esp_ble_key_value_t (*C++ union*), 176
esp_ble_key_value_t::lcsrk_key (*C++ member*), 177
esp_ble_key_value_t::lenc_key (*C++ member*), 177
esp_ble_key_value_t::pcsrk_key (*C++ member*), 177
esp_ble_key_value_t::penc_key (*C++ member*), 177
esp_ble_key_value_t::pid_key (*C++ member*), 177
esp_ble_lcsrk_keys (*C++ struct*), 198
esp_ble_lcsrk_keys::counter (*C++ member*), 198
esp_ble_lcsrk_keys::csrk (*C++ member*), 198
esp_ble_lcsrk_keys::div (*C++ member*), 198
esp_ble_lcsrk_keys::sec_level (*C++ member*), 198
ESP_BLE_LEGACY_ADV_TYPE_DIRECT_IND (*C macro*), 215
ESP_BLE_LEGACY_ADV_TYPE_IND (*C macro*), 215
ESP_BLE_LEGACY_ADV_TYPE_NONCON_IND (*C macro*), 215
ESP_BLE_LEGACY_ADV_TYPE_SCAN_IND (*C macro*), 215
ESP_BLE_LEGACY_ADV_TYPE_SCAN_RSP_TO_ADV_IND (*C macro*), 215
ESP_BLE_LEGACY_ADV_TYPE_SCAN_RSP_TO_ADV_SCAN_IND (*C macro*), 215
esp_ble_lenc_keys_t (*C++ struct*), 198
esp_ble_lenc_keys_t::div (*C++ member*), 198
esp_ble_lenc_keys_t::key_size (*C++ member*), 198
esp_ble_lenc_keys_t::ltk (*C++ member*), 198
esp_ble_lenc_keys_t::sec_level (*C++ member*), 198
ESP_BLE_LINK_KEY_MASK (*C macro*), 162
esp_ble_local_id_keys_t (*C++ struct*), 200
esp_ble_local_id_keys_t::dhk (*C++ member*), 200
esp_ble_local_id_keys_t::ir (*C++ member*), 200
esp_ble_local_id_keys_t::irk (*C++ member*), 200
ESP_BLE_MESH_ACTUATOR_BLOCKED_ERROR (*C macro*), 519
ESP_BLE_MESH_ACTUATOR_BLOCKED_WARNING (*C macro*), 519
ESP_BLE_MESH_ADDR_ALL_NODES (*C macro*), 426
ESP_BLE_MESH_ADDR_FRIENDS (*C macro*), 426
ESP_BLE_MESH_ADDR_IS_GROUP (*C macro*), 427
ESP_BLE_MESH_ADDR_IS_RFU (*C macro*), 427
ESP_BLE_MESH_ADDR_IS_UNICAST (*C macro*), 427
ESP_BLE_MESH_ADDR_IS_VIRTUAL (*C macro*), 427
ESP_BLE_MESH_ADDR_PROXIES (*C macro*), 426
ESP_BLE_MESH_ADDR_RELAYS (*C macro*), 426
ESP_BLE_MESH_ADDR_TYPE_PUBLIC (*C macro*), 429
ESP_BLE_MESH_ADDR_TYPE_RANDOM (*C macro*), 429
ESP_BLE_MESH_ADDR_TYPE_RPA_PUBLIC (*C macro*), 429
ESP_BLE_MESH_ADDR_TYPE_RPA_RANDOM (*C macro*), 429
esp_ble_mesh_addr_type_t (*C++ type*), 448
ESP_BLE_MESH_ADDR_UNASSIGNED (*C macro*), 426
ESP_BLE_MESH_BATTERY_LOW_ERROR (*C macro*), 518
ESP_BLE_MESH_BATTERY_LOW_WARNING (*C macro*), 518
esp_ble_mesh_bd_addr_t (*C++ type*), 448
ESP_BLE_MESH_BEACON_DISABLED (*C macro*), 427
ESP_BLE_MESH_BEACON_ENABLED (*C macro*), 427
esp_ble_mesh_cb_t (*C++ type*), 448
esp_ble_mesh_cb_type_t (*C++ enum*), 450
esp_ble_mesh_cb_type_t::ESP_BLE_MESH_TYPE_COMPLET (*C++ enumerator*), 450
esp_ble_mesh_cb_type_t::ESP_BLE_MESH_TYPE_INTPUT_ (*C++ enumerator*), 450
esp_ble_mesh_cb_type_t::ESP_BLE_MESH_TYPE_LINK_CL (*C++ enumerator*), 450
esp_ble_mesh_cb_type_t::ESP_BLE_MESH_TYPE_LINK_OP (*C++ enumerator*), 450
esp_ble_mesh_cb_type_t::ESP_BLE_MESH_TYPE_OUTPUT_ (*C++ enumerator*), 450
esp_ble_mesh_cb_type_t::ESP_BLE_MESH_TYPE_OUTPUT_ (*C++ enumerator*), 450
esp_ble_mesh_cb_type_t::ESP_BLE_MESH_TYPE_PROV_CB (*C++ enumerator*), 450
esp_ble_mesh_cb_type_t::ESP_BLE_MESH_TYPE_RESET_C (*C++ enumerator*), 450
esp_ble_mesh_cfg_app_key_add_t (*C++*

struct), 489
esp_ble_mesh_cfg_app_key_add_t::app_idx (*C++ member*), 490
esp_ble_mesh_cfg_app_key_add_t::app_key (*C++ member*), 490
esp_ble_mesh_cfg_app_key_add_t::net_idx (*C++ member*), 490
esp_ble_mesh_cfg_app_key_delete_t (*C++ struct*), 495
esp_ble_mesh_cfg_app_key_delete_t::app_idx (*C++ member*), 495
esp_ble_mesh_cfg_app_key_delete_t::net_idx (*C++ member*), 495
esp_ble_mesh_cfg_app_key_get_t (*C++ struct*), 487
esp_ble_mesh_cfg_app_key_get_t::net_idx (*C++ member*), 487
esp_ble_mesh_cfg_app_key_list_cb_t (*C++ struct*), 502
esp_ble_mesh_cfg_app_key_list_cb_t::app_idx (*C++ member*), 502
esp_ble_mesh_cfg_app_key_list_cb_t::net_idx (*C++ member*), 502
esp_ble_mesh_cfg_app_key_list_cb_t::status (*C++ member*), 502
esp_ble_mesh_cfg_app_key_status_cb_t (*C++ struct*), 499
esp_ble_mesh_cfg_app_key_status_cb_t::app_idx (*C++ member*), 500
esp_ble_mesh_cfg_app_key_status_cb_t::net_idx (*C++ member*), 500
esp_ble_mesh_cfg_app_key_status_cb_t::status (*C++ member*), 499
esp_ble_mesh_cfg_app_key_update_t (*C++ struct*), 495
esp_ble_mesh_cfg_app_key_update_t::app_idx (*C++ member*), 495
esp_ble_mesh_cfg_app_key_update_t::app_key (*C++ member*), 495
esp_ble_mesh_cfg_app_key_update_t::net_idx (*C++ member*), 495
esp_ble_mesh_cfg_beacon_set_t (*C++ struct*), 488
esp_ble_mesh_cfg_beacon_set_t::beacon (*C++ member*), 488
esp_ble_mesh_cfg_beacon_status_cb_t (*C++ struct*), 497
esp_ble_mesh_cfg_beacon_status_cb_t::beacon (*C++ member*), 497
esp_ble_mesh_cfg_client_cb_event_t (*C++ enum*), 509
esp_ble_mesh_cfg_client_cb_event_t::ESP_BLE_MESH_CFG_CLIENT_EVT_MAX (*C++ enumerator*), 509
esp_ble_mesh_cfg_client_cb_event_t::ESP_BLE_MESH_CFG_CLIENT_GET_STATE_EVT (*C++ enumerator*), 509
esp_ble_mesh_cfg_client_cb_event_t::ESP_BLE_MESH_CFG_CLIENT_PUBLISH_EVT (*C++ enumerator*), 509
esp_ble_mesh_cfg_client_cb_event_t::ESP_BLE_MESH_CFG_CLIENT_SET_STATE_EVT (*C++ enumerator*), 509
esp_ble_mesh_cfg_client_cb_param_t (*C++ struct*), 504
esp_ble_mesh_cfg_client_cb_param_t::error_code (*C++ member*), 504
esp_ble_mesh_cfg_client_cb_param_t::params (*C++ member*), 504
esp_ble_mesh_cfg_client_cb_param_t::status_cb (*C++ member*), 504
esp_ble_mesh_cfg_client_cb_t (*C++ type*), 509
esp_ble_mesh_cfg_client_common_cb_param_t (*C++ union*), 482
esp_ble_mesh_cfg_client_common_cb_param_t::appkey (*C++ member*), 483
esp_ble_mesh_cfg_client_common_cb_param_t::appkey (*C++ member*), 483
esp_ble_mesh_cfg_client_common_cb_param_t::beacon (*C++ member*), 482
esp_ble_mesh_cfg_client_common_cb_param_t::comp_d (*C++ member*), 482
esp_ble_mesh_cfg_client_common_cb_param_t::defaul (*C++ member*), 482
esp_ble_mesh_cfg_client_common_cb_param_t::friend (*C++ member*), 483
esp_ble_mesh_cfg_client_common_cb_param_t::gatt_p (*C++ member*), 482
esp_ble_mesh_cfg_client_common_cb_param_t::heartb (*C++ member*), 483
esp_ble_mesh_cfg_client_common_cb_param_t::heartb (*C++ member*), 483
esp_ble_mesh_cfg_client_common_cb_param_t::kr_pha (*C++ member*), 483
esp_ble_mesh_cfg_client_common_cb_param_t::lpn_ti (*C++ member*), 484
esp_ble_mesh_cfg_client_common_cb_param_t::model_ (*C++ member*), 483
esp_ble_mesh_cfg_client_common_cb_param_t::model_ (*C++ member*), 483
esp_ble_mesh_cfg_client_common_cb_param_t::model_ (*C++ member*), 483
esp_ble_mesh_cfg_client_common_cb_param_t::model_ (*C++ member*), 483
esp_ble_mesh_cfg_client_common_cb_param_t::model_ (*C++ member*), 483
esp_ble_mesh_cfg_client_common_cb_param_t::net_tr (*C++ member*), 483
esp_ble_mesh_cfg_client_common_cb_param_t::netkey (*C++ member*), 483
esp_ble_mesh_cfg_client_common_cb_param_t::netkey (*C++ member*), 483
esp_ble_mesh_cfg_client_common_cb_param_t::node_i (*C++ member*), 483
esp_ble_mesh_cfg_client_common_cb_param_t::relay_ (*C++ member*), 483

(C++ union), 479
esp_ble_mesh_cfg_client_get_state_t::app_key_get (C++ member), 480
esp_ble_mesh_cfg_client_get_state_t::comp_data_get (C++ member), 480
esp_ble_mesh_cfg_client_get_state_t::krp_get (C++ member), 480
esp_ble_mesh_cfg_client_get_state_t::lpn_poll_timeout_get (C++ member), 480
esp_ble_mesh_cfg_client_get_state_t::model_pub_get (C++ member), 480
esp_ble_mesh_cfg_client_get_state_t::node_identity_get (C++ member), 480
esp_ble_mesh_cfg_client_get_state_t::sig_model_app_get (C++ member), 480
esp_ble_mesh_cfg_client_get_state_t::sig_model_sub_get (C++ member), 480
esp_ble_mesh_cfg_client_get_state_t::vnd_model_app_get (C++ member), 480
esp_ble_mesh_cfg_client_get_state_t::vnd_model_sub_get (C++ member), 480
esp_ble_mesh_cfg_client_set_state_t (C++ union), 480
esp_ble_mesh_cfg_client_set_state_t::app_key_add (C++ member), 481
esp_ble_mesh_cfg_client_set_state_t::app_key_delete (C++ member), 482
esp_ble_mesh_cfg_client_set_state_t::app_key_update (C++ member), 482
esp_ble_mesh_cfg_client_set_state_t::beacon_set (C++ member), 481
esp_ble_mesh_cfg_client_set_state_t::default_ttl_set (C++ member), 481
esp_ble_mesh_cfg_client_set_state_t::friend_set (C++ member), 481
esp_ble_mesh_cfg_client_set_state_t::gatt_proxy_set (C++ member), 481
esp_ble_mesh_cfg_client_set_state_t::heartbeat_pub_set (C++ member), 481
esp_ble_mesh_cfg_client_set_state_t::krp_set (C++ member), 482
esp_ble_mesh_cfg_client_set_state_t::model_app_bind (C++ member), 481
esp_ble_mesh_cfg_client_set_state_t::model_app_unbind (C++ member), 482
esp_ble_mesh_cfg_client_set_state_t::model_pub_set (C++ member), 481
esp_ble_mesh_cfg_client_set_state_t::model_sub_add (C++ member), 481
esp_ble_mesh_cfg_client_set_state_t::model_sub_delete (C++ member), 481
esp_ble_mesh_cfg_client_set_state_t::model_sub_delete_all (C++ member), 482
esp_ble_mesh_cfg_client_set_state_t::model_sub_overwrite (C++ member), 481
esp_ble_mesh_cfg_client_set_state_t::model_sub_va
esp_ble_mesh_cfg_client_set_state_t::model_sub_va
esp_ble_mesh_cfg_client_set_state_t::model_sub_va
esp_ble_mesh_cfg_client_set_state_t::net_key_add
esp_ble_mesh_cfg_client_set_state_t::net_key_dele
esp_ble_mesh_cfg_client_set_state_t::net_key_upda
esp_ble_mesh_cfg_client_set_state_t::net_transmit
esp_ble_mesh_cfg_client_set_state_t::node_identit
esp_ble_mesh_cfg_client_set_state_t::relay_set
esp_ble_mesh_cfg_comp_data_status_cb_t (C++ struct), 497
esp_ble_mesh_cfg_comp_data_status_cb_t::compositi (C++ member), 497
esp_ble_mesh_cfg_comp_data_status_cb_t::page (C++ member), 497
esp_ble_mesh_cfg_composition_data_get_t (C++ struct), 486
esp_ble_mesh_cfg_composition_data_get_t::page (C++ member), 486
esp_ble_mesh_cfg_default_ttl_set_t (C++ struct), 488
esp_ble_mesh_cfg_default_ttl_set_t::ttl (C++ member), 489
esp_ble_mesh_cfg_default_ttl_status_cb_t (C++ struct), 497
esp_ble_mesh_cfg_default_ttl_status_cb_t::default (C++ member), 497
esp_ble_mesh_cfg_friend_set_t (C++ struct), 489
esp_ble_mesh_cfg_friend_set_t::friend_state (C++ member), 489
esp_ble_mesh_cfg_friend_status_cb_t (C++ struct), 500
esp_ble_mesh_cfg_friend_status_cb_t::friend_state (C++ member), 500
esp_ble_mesh_cfg_gatt_proxy_set_t (C++ struct), 489
esp_ble_mesh_cfg_gatt_proxy_set_t::gatt_proxy (C++ member), 489
esp_ble_mesh_cfg_gatt_proxy_status_cb_t (C++ struct), 497
esp_ble_mesh_cfg_gatt_proxy_status_cb_t::gatt_pro (C++ member), 498
esp_ble_mesh_cfg_hb_pub_status_cb_t (C++ struct), 500
esp_ble_mesh_cfg_hb_pub_status_cb_t::count (C++ member), 501
esp_ble_mesh_cfg_hb_pub_status_cb_t::dst

(C++ member), 500
esp_ble_mesh_cfg_hb_pub_status_cb_t::feature (C++ member), 501
esp_ble_mesh_cfg_hb_pub_status_cb_t::net_idx (C++ member), 501
esp_ble_mesh_cfg_hb_pub_status_cb_t::period (C++ member), 501
esp_ble_mesh_cfg_hb_pub_status_cb_t::status (C++ member), 500
esp_ble_mesh_cfg_hb_pub_status_cb_t::ttl (C++ member), 501
esp_ble_mesh_cfg_hb_sub_status_cb_t (C++ struct), 501
esp_ble_mesh_cfg_hb_sub_status_cb_t::count (C++ member), 501
esp_ble_mesh_cfg_hb_sub_status_cb_t::dst (C++ member), 501
esp_ble_mesh_cfg_hb_sub_status_cb_t::max_hops (C++ member), 501
esp_ble_mesh_cfg_hb_sub_status_cb_t::min_hops (C++ member), 501
esp_ble_mesh_cfg_hb_sub_status_cb_t::period (C++ member), 501
esp_ble_mesh_cfg_hb_sub_status_cb_t::src (C++ member), 501
esp_ble_mesh_cfg_hb_sub_status_cb_t::status (C++ member), 501
esp_ble_mesh_cfg_heartbeat_pub_set_t (C++ struct), 496
esp_ble_mesh_cfg_heartbeat_pub_set_t::count (C++ member), 496
esp_ble_mesh_cfg_heartbeat_pub_set_t::dst (C++ member), 496
esp_ble_mesh_cfg_heartbeat_pub_set_t::feature (C++ member), 496
esp_ble_mesh_cfg_heartbeat_pub_set_t::net_idx (C++ member), 497
esp_ble_mesh_cfg_heartbeat_pub_set_t::period (C++ member), 496
esp_ble_mesh_cfg_heartbeat_pub_set_t::ttl (C++ member), 496
esp_ble_mesh_cfg_heartbeat_sub_set_t (C++ struct), 497
esp_ble_mesh_cfg_heartbeat_sub_set_t::dst (C++ member), 497
esp_ble_mesh_cfg_heartbeat_sub_set_t::period (C++ member), 497
esp_ble_mesh_cfg_heartbeat_sub_set_t::src (C++ member), 497
esp_ble_mesh_cfg_kr_phase_get_t (C++ struct), 488
esp_ble_mesh_cfg_kr_phase_get_t::net_idx (C++ member), 488
esp_ble_mesh_cfg_kr_phase_set_t (C++ struct), 496
esp_ble_mesh_cfg_kr_phase_set_t::net_idx (C++ member), 496
esp_ble_mesh_cfg_kr_phase_set_t::transition (C++ member), 496
esp_ble_mesh_cfg_kr_phase_status_cb_t (C++ struct), 503
esp_ble_mesh_cfg_kr_phase_status_cb_t::net_idx (C++ member), 503
esp_ble_mesh_cfg_kr_phase_status_cb_t::phase (C++ member), 504
esp_ble_mesh_cfg_kr_phase_status_cb_t::status (C++ member), 503
esp_ble_mesh_cfg_lpn_polltimeout_get_t (C++ struct), 488
esp_ble_mesh_cfg_lpn_polltimeout_get_t::lpn_addr (C++ member), 488
esp_ble_mesh_cfg_lpn_pollto_status_cb_t (C++ struct), 504
esp_ble_mesh_cfg_lpn_pollto_status_cb_t::lpn_addr (C++ member), 504
esp_ble_mesh_cfg_lpn_pollto_status_cb_t::poll_timeout (C++ member), 504
esp_ble_mesh_cfg_mod_app_status_cb_t (C++ struct), 500
esp_ble_mesh_cfg_mod_app_status_cb_t::app_idx (C++ member), 500
esp_ble_mesh_cfg_mod_app_status_cb_t::company_id (C++ member), 500
esp_ble_mesh_cfg_mod_app_status_cb_t::element_addr (C++ member), 500
esp_ble_mesh_cfg_mod_app_status_cb_t::model_id (C++ member), 500
esp_ble_mesh_cfg_mod_app_status_cb_t::status (C++ member), 500
esp_ble_mesh_cfg_model_app_bind_t (C++ struct), 490
esp_ble_mesh_cfg_model_app_bind_t::company_id (C++ member), 490
esp_ble_mesh_cfg_model_app_bind_t::element_addr (C++ member), 490
esp_ble_mesh_cfg_model_app_bind_t::model_app_idx (C++ member), 490
esp_ble_mesh_cfg_model_app_bind_t::model_id (C++ member), 490
esp_ble_mesh_cfg_model_app_list_cb_t (C++ struct), 503
esp_ble_mesh_cfg_model_app_list_cb_t::app_idx (C++ member), 503
esp_ble_mesh_cfg_model_app_list_cb_t::company_id (C++ member), 503
esp_ble_mesh_cfg_model_app_list_cb_t::element_addr (C++ member), 503
esp_ble_mesh_cfg_model_app_list_cb_t::model_id (C++ member), 503
esp_ble_mesh_cfg_model_app_list_cb_t::status (C++ member), 503
esp_ble_mesh_cfg_model_app_unbind_t (C++ struct), 495
esp_ble_mesh_cfg_model_app_unbind_t::company_id (C++ member), 496
esp_ble_mesh_cfg_model_app_unbind_t::element_addr

(C++ member), 495
esp_ble_mesh_cfg_model_app_unbind_t::model_app_idx (C++ member), 495
esp_ble_mesh_cfg_model_app_unbind_t::model_id (C++ member), 496
esp_ble_mesh_cfg_model_pub_get_t (C++ struct), 486
esp_ble_mesh_cfg_model_pub_get_t::company_id (C++ member), 486
esp_ble_mesh_cfg_model_pub_get_t::element_addr (C++ member), 486
esp_ble_mesh_cfg_model_pub_get_t::model_id (C++ member), 486
esp_ble_mesh_cfg_model_pub_set_t (C++ struct), 490
esp_ble_mesh_cfg_model_pub_set_t::company_id (C++ member), 491
esp_ble_mesh_cfg_model_pub_set_t::cred_flag (C++ member), 490
esp_ble_mesh_cfg_model_pub_set_t::element_addr (C++ member), 490
esp_ble_mesh_cfg_model_pub_set_t::model_id (C++ member), 491
esp_ble_mesh_cfg_model_pub_set_t::publish_addr (C++ member), 490
esp_ble_mesh_cfg_model_pub_set_t::publish_app_idx (C++ member), 490
esp_ble_mesh_cfg_model_pub_set_t::publish_period (C++ member), 491
esp_ble_mesh_cfg_model_pub_set_t::publish_retransmit (C++ member), 491
esp_ble_mesh_cfg_model_pub_set_t::publish_ttl (C++ member), 491
esp_ble_mesh_cfg_model_pub_status_cb_t (C++ struct), 498
esp_ble_mesh_cfg_model_pub_status_cb_t::app_idx (C++ member), 498
esp_ble_mesh_cfg_model_pub_status_cb_t::company_id (C++ member), 499
esp_ble_mesh_cfg_model_pub_status_cb_t::cred_flag (C++ member), 498
esp_ble_mesh_cfg_model_pub_status_cb_t::element_addr (C++ member), 498
esp_ble_mesh_cfg_model_pub_status_cb_t::model_id (C++ member), 499
esp_ble_mesh_cfg_model_pub_status_cb_t::period (C++ member), 498
esp_ble_mesh_cfg_model_pub_status_cb_t::publish_addr (C++ member), 498
esp_ble_mesh_cfg_model_pub_status_cb_t::publish_ttl (C++ member), 498
esp_ble_mesh_cfg_model_pub_status_cb_t::retransmit (C++ member), 498
esp_ble_mesh_cfg_model_pub_status_cb_t::status (C++ member), 498
esp_ble_mesh_cfg_model_pub_va_set_t (C++ struct), 493
esp_ble_mesh_cfg_model_pub_va_set_t::company_id (C++ member), 494
esp_ble_mesh_cfg_model_pub_va_set_t::cred_flag (C++ member), 493
esp_ble_mesh_cfg_model_pub_va_set_t::element_addr (C++ member), 493
esp_ble_mesh_cfg_model_pub_va_set_t::label_uuid (C++ member), 493
esp_ble_mesh_cfg_model_pub_va_set_t::model_id (C++ member), 494
esp_ble_mesh_cfg_model_pub_va_set_t::publish_app_idx (C++ member), 493
esp_ble_mesh_cfg_model_pub_va_set_t::publish_period (C++ member), 494
esp_ble_mesh_cfg_model_pub_va_set_t::publish_retransmit (C++ member), 494
esp_ble_mesh_cfg_model_pub_va_set_t::publish_ttl (C++ member), 493
esp_ble_mesh_cfg_model_sub_add_t (C++ struct), 491
esp_ble_mesh_cfg_model_sub_add_t::company_id (C++ member), 491
esp_ble_mesh_cfg_model_sub_add_t::element_addr (C++ member), 491
esp_ble_mesh_cfg_model_sub_add_t::model_id (C++ member), 491
esp_ble_mesh_cfg_model_sub_add_t::sub_addr (C++ member), 491
esp_ble_mesh_cfg_model_sub_delete_all_t (C++ struct), 494
esp_ble_mesh_cfg_model_sub_delete_all_t::company_id (C++ member), 494
esp_ble_mesh_cfg_model_sub_delete_all_t::element_addr (C++ member), 494
esp_ble_mesh_cfg_model_sub_delete_all_t::model_id (C++ member), 494
esp_ble_mesh_cfg_model_sub_delete_t (C++ struct), 491
esp_ble_mesh_cfg_model_sub_delete_t::company_id (C++ member), 492
esp_ble_mesh_cfg_model_sub_delete_t::element_addr (C++ member), 491
esp_ble_mesh_cfg_model_sub_delete_t::model_id (C++ member), 491
esp_ble_mesh_cfg_model_sub_delete_t::sub_addr (C++ member), 491
esp_ble_mesh_cfg_model_sub_list_cb_t (C++ struct), 502
esp_ble_mesh_cfg_model_sub_list_cb_t::company_id (C++ member), 502
esp_ble_mesh_cfg_model_sub_list_cb_t::element_addr (C++ member), 502
esp_ble_mesh_cfg_model_sub_list_cb_t::model_id (C++ member), 502
esp_ble_mesh_cfg_model_sub_list_cb_t::status (C++ member), 502
esp_ble_mesh_cfg_model_sub_list_cb_t::sub_addr (C++ member), 502
esp_ble_mesh_cfg_model_sub_overwrite_t

(C++ *struct*), 492
esp_ble_mesh_cfg_model_sub_overwrite_t::company_id (C++ *member*), 492
esp_ble_mesh_cfg_model_sub_overwrite_t::element_addr (C++ *member*), 492
esp_ble_mesh_cfg_model_sub_overwrite_t::model_id (C++ *member*), 492
esp_ble_mesh_cfg_model_sub_overwrite_t::sub_addr (C++ *member*), 492
esp_ble_mesh_cfg_model_sub_status_cb_t (C++ *struct*), 499
esp_ble_mesh_cfg_model_sub_status_cb_t::company_id (C++ *member*), 499
esp_ble_mesh_cfg_model_sub_status_cb_t::element_addr (C++ *member*), 499
esp_ble_mesh_cfg_model_sub_status_cb_t::model_id (C++ *member*), 499
esp_ble_mesh_cfg_model_sub_status_cb_t::status (C++ *member*), 499
esp_ble_mesh_cfg_model_sub_status_cb_t::sub_addr (C++ *member*), 499
esp_ble_mesh_cfg_model_sub_va_add_t (C++ *struct*), 492
esp_ble_mesh_cfg_model_sub_va_add_t::company_id (C++ *member*), 492
esp_ble_mesh_cfg_model_sub_va_add_t::element_addr (C++ *member*), 492
esp_ble_mesh_cfg_model_sub_va_add_t::label_uuid (C++ *member*), 492
esp_ble_mesh_cfg_model_sub_va_add_t::model_id (C++ *member*), 492
esp_ble_mesh_cfg_model_sub_va_delete_t (C++ *struct*), 492
esp_ble_mesh_cfg_model_sub_va_delete_t::company_id (C++ *member*), 493
esp_ble_mesh_cfg_model_sub_va_delete_t::element_addr (C++ *member*), 492
esp_ble_mesh_cfg_model_sub_va_delete_t::label_uuid (C++ *member*), 493
esp_ble_mesh_cfg_model_sub_va_delete_t::model_id (C++ *member*), 493
esp_ble_mesh_cfg_model_sub_va_overwrite_t (C++ *struct*), 493
esp_ble_mesh_cfg_model_sub_va_overwrite_t::company_id (C++ *member*), 493
esp_ble_mesh_cfg_model_sub_va_overwrite_t::element_addr (C++ *member*), 493
esp_ble_mesh_cfg_model_sub_va_overwrite_t::label_uuid (C++ *member*), 493
esp_ble_mesh_cfg_model_sub_va_overwrite_t::model_id (C++ *member*), 493
esp_ble_mesh_cfg_net_key_add_t (C++ *struct*), 489
esp_ble_mesh_cfg_net_key_add_t::net_idx (C++ *member*), 489
esp_ble_mesh_cfg_net_key_add_t::net_key (C++ *member*), 489
esp_ble_mesh_cfg_net_key_delete_t (C++ *struct*), 494
esp_ble_mesh_cfg_net_key_delete_t::net_idx (C++ *member*), 494
esp_ble_mesh_cfg_net_key_list_cb_t (C++ *struct*), 502
esp_ble_mesh_cfg_net_key_list_cb_t::net_idx (C++ *member*), 502
esp_ble_mesh_cfg_net_key_status_cb_t (C++ *struct*), 499
esp_ble_mesh_cfg_net_key_status_cb_t::net_idx (C++ *member*), 499
esp_ble_mesh_cfg_net_key_status_cb_t::status (C++ *member*), 499
esp_ble_mesh_cfg_net_key_update_t (C++ *struct*), 494
esp_ble_mesh_cfg_net_key_update_t::net_idx (C++ *member*), 494
esp_ble_mesh_cfg_net_key_update_t::net_key (C++ *member*), 494
esp_ble_mesh_cfg_net_trans_status_cb_t (C++ *struct*), 501
esp_ble_mesh_cfg_net_trans_status_cb_t::net_trans (C++ *member*), 502
esp_ble_mesh_cfg_net_trans_status_cb_t::net_trans (C++ *member*), 502
esp_ble_mesh_cfg_net_transmit_set_t (C++ *struct*), 496
esp_ble_mesh_cfg_net_transmit_set_t::net_transmit (C++ *member*), 496
esp_ble_mesh_cfg_node_id_status_cb_t (C++ *struct*), 503
esp_ble_mesh_cfg_node_id_status_cb_t::identity (C++ *member*), 503
esp_ble_mesh_cfg_node_id_status_cb_t::net_idx (C++ *member*), 503
esp_ble_mesh_cfg_node_id_status_cb_t::status (C++ *member*), 503
esp_ble_mesh_cfg_node_identity_get_t (C++ *struct*), 487
esp_ble_mesh_cfg_node_identity_get_t::net_idx (C++ *member*), 487
esp_ble_mesh_cfg_node_identity_set_t (C++ *struct*), 495
esp_ble_mesh_cfg_node_identity_set_t::identity (C++ *member*), 495
esp_ble_mesh_cfg_node_identity_set_t::net_idx (C++ *member*), 495
esp_ble_mesh_cfg_relay_set_t (C++ *struct*), 489
esp_ble_mesh_cfg_relay_set_t::relay (C++ *member*), 489
esp_ble_mesh_cfg_relay_set_t::relay_retransmit (C++ *member*), 489
esp_ble_mesh_cfg_relay_status_cb_t (C++ *struct*), 498
esp_ble_mesh_cfg_relay_status_cb_t::relay (C++ *member*), 498
esp_ble_mesh_cfg_relay_status_cb_t::retransmit

(C++ *member*), 498
esp_ble_mesh_cfg_server_cb_event_t (C++ *enum*), 509
esp_ble_mesh_cfg_server_cb_event_t::ESP_BLE_MESH_CFG_SERVER_EVT_MAX (C++ *enumerator*), 510
esp_ble_mesh_cfg_server_cb_event_t::ESP_BLE_MESH_CFG_SERVER_STATE_CHANGE_EVT (C++ *enumerator*), 509
esp_ble_mesh_cfg_server_cb_param_t (C++ *struct*), 508
esp_ble_mesh_cfg_server_cb_param_t::ctx (C++ *member*), 508
esp_ble_mesh_cfg_server_cb_param_t::model (C++ *member*), 508
esp_ble_mesh_cfg_server_cb_param_t::value (C++ *member*), 508
esp_ble_mesh_cfg_server_cb_t (C++ *type*), 509
esp_ble_mesh_cfg_server_cb_value_t (C++ *union*), 484
esp_ble_mesh_cfg_server_cb_value_t::state_change (C++ *member*), 485
esp_ble_mesh_cfg_server_state_change_t (C++ *union*), 484
esp_ble_mesh_cfg_server_state_change_t::appkey_add (C++ *member*), 484
esp_ble_mesh_cfg_server_state_change_t::appkey_delete (C++ *member*), 484
esp_ble_mesh_cfg_server_state_change_t::appkey_update (C++ *member*), 484
esp_ble_mesh_cfg_server_state_change_t::kr_phase_set (C++ *member*), 484
esp_ble_mesh_cfg_server_state_change_t::mod_app_bind (C++ *member*), 484
esp_ble_mesh_cfg_server_state_change_t::mod_app_unbind (C++ *member*), 484
esp_ble_mesh_cfg_server_state_change_t::mod_pub_set (C++ *member*), 484
esp_ble_mesh_cfg_server_state_change_t::mod_sub_add (C++ *member*), 484
esp_ble_mesh_cfg_server_state_change_t::mod_sub_delete (C++ *member*), 484
esp_ble_mesh_cfg_server_state_change_t::netkey_add (C++ *member*), 484
esp_ble_mesh_cfg_server_state_change_t::netkey_delete (C++ *member*), 484
esp_ble_mesh_cfg_server_state_change_t::netkey_update (C++ *member*), 484
esp_ble_mesh_cfg_sig_model_app_get_t (C++ *struct*), 487
esp_ble_mesh_cfg_sig_model_app_get_t::element_addr (C++ *member*), 488
esp_ble_mesh_cfg_sig_model_app_get_t::model_id (C++ *member*), 488
esp_ble_mesh_cfg_sig_model_sub_get_t (C++ *struct*), 487
esp_ble_mesh_cfg_sig_model_sub_get_t::element_addr (C++ *member*), 487
esp_ble_mesh_cfg_sig_model_sub_get_t::model_id (C++ *member*), 487
esp_ble_mesh_cfg_srv (C++ *struct*), 485
esp_ble_mesh_cfg_srv::beacon (C++ *member*), 485
esp_ble_mesh_cfg_srv::count (C++ *member*), 485
esp_ble_mesh_cfg_srv::default_ttl (C++ *member*), 485
esp_ble_mesh_cfg_srv::dst (C++ *member*), 485
esp_ble_mesh_cfg_srv::expiry (C++ *member*), 486
esp_ble_mesh_cfg_srv::feature (C++ *member*), 486
esp_ble_mesh_cfg_srv::friend_state (C++ *member*), 485
esp_ble_mesh_cfg_srv::gatt_proxy (C++ *member*), 485
esp_ble_mesh_cfg_srv::heartbeat_pub (C++ *member*), 486
esp_ble_mesh_cfg_srv::heartbeat_recv_cb (C++ *member*), 486
esp_ble_mesh_cfg_srv::heartbeat_sub (C++ *member*), 486
esp_ble_mesh_cfg_srv::max_hops (C++ *member*), 486
esp_ble_mesh_cfg_srv::min_hops (C++ *member*), 486
esp_ble_mesh_cfg_srv::model (C++ *member*), 485
esp_ble_mesh_cfg_srv::net_idx (C++ *member*), 486
esp_ble_mesh_cfg_srv::net_transmit (C++ *member*), 485
esp_ble_mesh_cfg_srv::period (C++ *member*), 485
esp_ble_mesh_cfg_srv::relay (C++ *member*), 485
esp_ble_mesh_cfg_srv::relay_retransmit (C++ *member*), 485
esp_ble_mesh_cfg_srv::src (C++ *member*), 485
esp_ble_mesh_cfg_srv::timer (C++ *member*), 485
esp_ble_mesh_cfg_srv::ttl (C++ *member*), 485
esp_ble_mesh_cfg_srv_t (C++ *type*), 509
ESP_BLE_MESH_CFG_STATUS_CANNOT_BIND (C *macro*), 437
ESP_BLE_MESH_CFG_STATUS_CANNOT_REMOVE (C *macro*), 437
ESP_BLE_MESH_CFG_STATUS_CANNOT_SET (C *macro*), 437
ESP_BLE_MESH_CFG_STATUS_CANNOT_UPDATE (C *macro*), 437
ESP_BLE_MESH_CFG_STATUS_FEATURE_NOT_SUPPORTED (C *macro*), 437
ESP_BLE_MESH_CFG_STATUS_INSUFFICIENT_RESOURCES

(*C macro*), 437
ESP_BLE_MESH_CFG_STATUS_INVALID_ADDRESS (*C macro*), 437
ESP_BLE_MESH_CFG_STATUS_INVALID_APPKEY (*C macro*), 437
ESP_BLE_MESH_CFG_STATUS_INVALID_BINDING (*C macro*), 438
ESP_BLE_MESH_CFG_STATUS_INVALID_MODEL (*C macro*), 437
ESP_BLE_MESH_CFG_STATUS_INVALID_NETKEY (*C macro*), 437
ESP_BLE_MESH_CFG_STATUS_INVALID_PUBLISH_PARAMETERS (*C macro*), 437
ESP_BLE_MESH_CFG_STATUS_KEY_INDEX_ALREADY_STORED (*C macro*), 437
ESP_BLE_MESH_CFG_STATUS_NOT_A_SUBSCRIBE_MODEL (*C macro*), 437
ESP_BLE_MESH_CFG_STATUS_STORAGE_FAILURE (*C macro*), 437
ESP_BLE_MESH_CFG_STATUS_SUCCESS (*C macro*), 437
esp_ble_mesh_cfg_status_t (*C++ type*), 449
ESP_BLE_MESH_CFG_STATUS_TEMP_UNABLE_TO_CHANGE_STATE (*C macro*), 437
ESP_BLE_MESH_CFG_STATUS_UNSPECIFIED_ERROR (*C macro*), 438
esp_ble_mesh_cfg_vnd_model_app_get_t (*C++ struct*), 488
esp_ble_mesh_cfg_vnd_model_app_get_t::company_id (*C++ member*), 488
esp_ble_mesh_cfg_vnd_model_app_get_t::element_addr (*C++ member*), 488
esp_ble_mesh_cfg_vnd_model_app_get_t::model_id (*C++ member*), 488
esp_ble_mesh_cfg_vnd_model_sub_get_t (*C++ struct*), 487
esp_ble_mesh_cfg_vnd_model_sub_get_t::company_id (*C++ member*), 487
esp_ble_mesh_cfg_vnd_model_sub_get_t::element_addr (*C++ member*), 487
esp_ble_mesh_cfg_vnd_model_sub_get_t::model_id (*C++ member*), 487
ESP_BLE_MESH_CID_NVAL (*C macro*), 426
esp_ble_mesh_client_common_param_t (*C++ struct*), 423
esp_ble_mesh_client_common_param_t::ctx (*C++ member*), 423
esp_ble_mesh_client_common_param_t::model (*C++ member*), 423
esp_ble_mesh_client_common_param_t::msg_role (*C++ member*), 423
esp_ble_mesh_client_common_param_t::msg_timeout (*C++ member*), 423
esp_ble_mesh_client_common_param_t::opcode (*C++ member*), 423
esp_ble_mesh_client_model_deinit (*C++ function*), 464
esp_ble_mesh_client_model_init (*C++ function*), 464
esp_ble_mesh_client_model_send_msg (*C++ function*), 465
esp_ble_mesh_client_op_pair_t (*C++ struct*), 422
esp_ble_mesh_client_op_pair_t::cli_op (*C++ member*), 422
esp_ble_mesh_client_op_pair_t::status_op (*C++ member*), 422
esp_ble_mesh_client_t (*C++ struct*), 423
esp_ble_mesh_client_t::internal_data (*C++ member*), 423
esp_ble_mesh_client_t::model (*C++ member*), 423
esp_ble_mesh_client_t::msg_role (*C++ member*), 423
esp_ble_mesh_client_t::op_pair (*C++ member*), 423
esp_ble_mesh_client_t::op_pair_size (*C++ member*), 423
esp_ble_mesh_client_t::publish_status (*C++ member*), 423
esp_ble_mesh_comp_t (*C++ struct*), 419
esp_ble_mesh_comp_t::cid (*C++ member*), 419
esp_ble_mesh_comp_t::element_count (*C++ member*), 419
esp_ble_mesh_comp_t::elements (*C++ member*), 419
esp_ble_mesh_comp_t::pid (*C++ member*), 419
esp_ble_mesh_comp_t::vid (*C++ member*), 419
ESP_BLE_MESH_CONDENSATION_ERROR (*C macro*), 518
ESP_BLE_MESH_CONDENSATION_WARNING (*C macro*), 518
esp_ble_mesh_config_client_get_state (*C++ function*), 479
esp_ble_mesh_config_client_set_state (*C++ function*), 479
ESP_BLE_MESH_CONFIGURATION_ERROR (*C macro*), 518
ESP_BLE_MESH_CONFIGURATION_WARNING (*C macro*), 518
esp_ble_mesh_deinit (*C++ function*), 460
esp_ble_mesh_deinit_param_t (*C++ struct*), 415
esp_ble_mesh_deinit_param_t::erase_flash (*C++ member*), 415
esp_ble_mesh_dev_add_flag_t (*C++ type*), 448
esp_ble_mesh_dev_role_t (*C++ enum*), 452
esp_ble_mesh_dev_role_t::ROLE_FAST_PROV (*C++ enumerator*), 452
esp_ble_mesh_dev_role_t::ROLE_NODE (*C++ enumerator*), 452
esp_ble_mesh_dev_role_t::ROLE_PROVISIONER

(C++ *enumerator*), 452
esp_ble_mesh_device_delete_t (C++ *struct*), 420
esp_ble_mesh_device_delete_t::addr (C++ *member*), 420
esp_ble_mesh_device_delete_t::addr_type (C++ *member*), 420
esp_ble_mesh_device_delete_t::flag (C++ *member*), 420
esp_ble_mesh_device_delete_t::uuid (C++ *member*), 420
ESP_BLE_MESH_DEVICE_DROPPED_ERROR (C *macro*), 519
ESP_BLE_MESH_DEVICE_DROPPED_WARNING (C *macro*), 519
ESP_BLE_MESH_DEVICE_MOVED_ERROR (C *macro*), 519
ESP_BLE_MESH_DEVICE_MOVED_WARNING (C *macro*), 519
ESP_BLE_MESH_DEVICE_NAME_MAX_LEN (C *macro*), 426
esp_ble_mesh_elem_t (C++ *struct*), 415
esp_ble_mesh_elem_t::element_addr (C++ *member*), 415
esp_ble_mesh_elem_t::location (C++ *member*), 415
esp_ble_mesh_elem_t::sig_model_count (C++ *member*), 415
esp_ble_mesh_elem_t::sig_models (C++ *member*), 415
esp_ble_mesh_elem_t::vnd_model_count (C++ *member*), 415
esp_ble_mesh_elem_t::vnd_models (C++ *member*), 415
ESP_BLE_MESH_ELEMENT (C *macro*), 429
ESP_BLE_MESH_ELEMENT_NOT_CALIBRATED_ERROR (C *macro*), 519
ESP_BLE_MESH_ELEMENT_NOT_CALIBRATED_WARNING (C *macro*), 518
ESP_BLE_MESH_EMPTY_ERROR (C *macro*), 520
ESP_BLE_MESH_EMPTY_WARNING (C *macro*), 520
esp_ble_mesh_fast_prov_action_t (C++ *enum*), 452
esp_ble_mesh_fast_prov_action_t::FAST_PROV_ACT_ENTER (C++ *enumerator*), 452
esp_ble_mesh_fast_prov_action_t::FAST_PROV_ACT_EXIT (C++ *enumerator*), 452
esp_ble_mesh_fast_prov_action_t::FAST_PROV_ACT_MAX (C++ *enumerator*), 452
esp_ble_mesh_fast_prov_action_t::FAST_PROV_ACT_NONE (C++ *enumerator*), 452
esp_ble_mesh_fast_prov_action_t::FAST_PROV_ACT_SUSPEND (C++ *enumerator*), 452
esp_ble_mesh_fast_prov_info_t (C++ *struct*), 421
esp_ble_mesh_fast_prov_info_t::flags (C++ *member*), 422
esp_ble_mesh_fast_prov_info_t::iv_index (C++ *member*), 422
esp_ble_mesh_fast_prov_info_t::match_len (C++ *member*), 422
esp_ble_mesh_fast_prov_info_t::match_val (C++ *member*), 422
esp_ble_mesh_fast_prov_info_t::net_idx (C++ *member*), 422
esp_ble_mesh_fast_prov_info_t::offset (C++ *member*), 422
esp_ble_mesh_fast_prov_info_t::unicast_max (C++ *member*), 422
esp_ble_mesh_fast_prov_info_t::unicast_min (C++ *member*), 422
ESP_BLE_MESH_FEATURE_ALL_SUPPORTED (C *macro*), 427
ESP_BLE_MESH_FEATURE_FRIEND (C *macro*), 427
ESP_BLE_MESH_FEATURE_LOW_POWER (C *macro*), 427
ESP_BLE_MESH_FEATURE_PROXY (C *macro*), 427
ESP_BLE_MESH_FEATURE_RELAY (C *macro*), 427
esp_ble_mesh_find_element (C++ *function*), 461
esp_ble_mesh_find_sig_model (C++ *function*), 461
esp_ble_mesh_find_vendor_model (C++ *function*), 461
ESP_BLE_MESH_FRIEND_DISABLED (C *macro*), 427
ESP_BLE_MESH_FRIEND_ENABLED (C *macro*), 427
ESP_BLE_MESH_FRIEND_NOT_SUPPORTED (C *macro*), 427
ESP_BLE_MESH_GATT_PROXY_DISABLED (C *macro*), 427
ESP_BLE_MESH_GATT_PROXY_ENABLED (C *macro*), 427
ESP_BLE_MESH_GATT_PROXY_NOT_SUPPORTED (C *macro*), 427
esp_ble_mesh_gen_admin_prop_access_t (C++ *enum*), 560
esp_ble_mesh_gen_admin_prop_access_t::ESP_BLE_MESH_GEN_ADMIN_PROP_ACCESS_ADMIN (C++ *enumerator*), 560
esp_ble_mesh_gen_admin_prop_access_t::ESP_BLE_MESH_GEN_ADMIN_PROP_ACCESS_MANUFACTURER (C++ *enumerator*), 561
esp_ble_mesh_gen_admin_prop_access_t::ESP_BLE_MESH_GEN_ADMIN_PROP_ACCESS_NONE (C++ *enumerator*), 561
esp_ble_mesh_gen_admin_prop_srv_t (C++ *struct*), 544
esp_ble_mesh_gen_admin_prop_srv_t::model (C++ *member*), 545
esp_ble_mesh_gen_admin_prop_srv_t::properties (C++ *member*), 545
esp_ble_mesh_gen_admin_prop_srv_t::property_count (C++ *member*), 545
esp_ble_mesh_gen_admin_prop_srv_t::rsp_ctrl

(C++ member), 545
esp_ble_mesh_gen_admin_properties_status_cb_t (C++ struct), 536
esp_ble_mesh_gen_admin_properties_status_cb_t::properties (C++ member), 536
esp_ble_mesh_gen_admin_property_get_t (C++ struct), 531
esp_ble_mesh_gen_admin_property_get_t::property_id (C++ member), 531
esp_ble_mesh_gen_admin_property_set_t (C++ struct), 531
esp_ble_mesh_gen_admin_property_set_t::property_id (C++ member), 532
esp_ble_mesh_gen_admin_property_set_t::property_value (C++ member), 532
esp_ble_mesh_gen_admin_property_set_t::user_access (C++ member), 532
esp_ble_mesh_gen_admin_property_status_cb_t (C++ struct), 536
esp_ble_mesh_gen_admin_property_status_cb_t::admin_property_id (C++ member), 536
esp_ble_mesh_gen_admin_property_status_cb_t::property_id (C++ member), 536
esp_ble_mesh_gen_admin_property_status_cb_t::property_value (C++ member), 536
esp_ble_mesh_gen_admin_property_status_cb_t::user_access (C++ member), 536
esp_ble_mesh_gen_battery_srv_t (C++ struct), 542
esp_ble_mesh_gen_battery_srv_t::model (C++ member), 542
esp_ble_mesh_gen_battery_srv_t::rsp_ctrl (C++ member), 542
esp_ble_mesh_gen_battery_srv_t::state (C++ member), 542
esp_ble_mesh_gen_battery_state_t (C++ struct), 542
esp_ble_mesh_gen_battery_state_t::battery_flags (C++ member), 542
esp_ble_mesh_gen_battery_state_t::battery_level (C++ member), 542
esp_ble_mesh_gen_battery_state_t::time_to_charge (C++ member), 542
esp_ble_mesh_gen_battery_state_t::time_to_discharge (C++ member), 542
esp_ble_mesh_gen_battery_status_cb_t (C++ struct), 534
esp_ble_mesh_gen_battery_status_cb_t::battery_level (C++ member), 535
esp_ble_mesh_gen_battery_status_cb_t::flags (C++ member), 535
esp_ble_mesh_gen_battery_status_cb_t::time_to_charge (C++ member), 535
esp_ble_mesh_gen_battery_status_cb_t::time_to_discharge (C++ member), 535
esp_ble_mesh_gen_client_prop_srv_t (C++ struct), 545
esp_ble_mesh_gen_client_prop_srv_t::id (C++ member), 545
esp_ble_mesh_gen_client_prop_srv_t::model (C++ member), 545
esp_ble_mesh_gen_client_prop_srv_t::property_ids (C++ member), 546
esp_ble_mesh_gen_client_prop_srv_t::rsp_ctrl (C++ member), 545
esp_ble_mesh_gen_client_properties_get_t (C++ struct), 532
esp_ble_mesh_gen_client_properties_get_t::property_id (C++ member), 532
esp_ble_mesh_gen_client_properties_status_cb_t (C++ struct), 537
esp_ble_mesh_gen_client_properties_status_cb_t::property_ids (C++ member), 537
esp_ble_mesh_gen_client_status_cb_t (C++ union), 523
esp_ble_mesh_gen_client_status_cb_t::admin_property (C++ member), 524
esp_ble_mesh_gen_client_status_cb_t::admin_property_id (C++ member), 524
esp_ble_mesh_gen_client_status_cb_t::battery_state (C++ member), 524
esp_ble_mesh_gen_client_status_cb_t::client_property_id (C++ member), 524
esp_ble_mesh_gen_client_status_cb_t::def_trans_time (C++ member), 524
esp_ble_mesh_gen_client_status_cb_t::level_status (C++ member), 523
esp_ble_mesh_gen_client_status_cb_t::location_global (C++ member), 524
esp_ble_mesh_gen_client_status_cb_t::location_local (C++ member), 524
esp_ble_mesh_gen_client_status_cb_t::manufacturer_name (C++ member), 524
esp_ble_mesh_gen_client_status_cb_t::manufacturer_property (C++ member), 524
esp_ble_mesh_gen_client_status_cb_t::onoff_status (C++ member), 523
esp_ble_mesh_gen_client_status_cb_t::onpowerup_state (C++ member), 524
esp_ble_mesh_gen_client_status_cb_t::power_default (C++ member), 524
esp_ble_mesh_gen_client_status_cb_t::power_last_status (C++ member), 524
esp_ble_mesh_gen_client_status_cb_t::power_level_status (C++ member), 524
esp_ble_mesh_gen_client_status_cb_t::power_range_status (C++ member), 524
esp_ble_mesh_gen_client_status_cb_t::user_property_ids (C++ member), 524
esp_ble_mesh_gen_client_status_cb_t::user_property_value (C++ member), 524
esp_ble_mesh_gen_def_trans_time_set_t (C++ struct), 529
esp_ble_mesh_gen_def_trans_time_set_t::trans_time (C++ member), 529
esp_ble_mesh_gen_def_trans_time_srv_t

(C++ *struct*), 539
esp_ble_mesh_gen_def_trans_time_srv_t::model (C++ *member*), 540
esp_ble_mesh_gen_def_trans_time_srv_t::rsp_ctrl (C++ *member*), 540
esp_ble_mesh_gen_def_trans_time_srv_t::state (C++ *member*), 540
esp_ble_mesh_gen_def_trans_time_state_t (C++ *struct*), 539
esp_ble_mesh_gen_def_trans_time_state_t::trans_time (C++ *member*), 539
esp_ble_mesh_gen_def_trans_time_status_cb_t (C++ *struct*), 533
esp_ble_mesh_gen_def_trans_time_status_cb_t::trans_time (C++ *member*), 533
esp_ble_mesh_gen_delta_set_t (C++ *struct*), 528
esp_ble_mesh_gen_delta_set_t::delay (C++ *member*), 528
esp_ble_mesh_gen_delta_set_t::level (C++ *member*), 528
esp_ble_mesh_gen_delta_set_t::op_en (C++ *member*), 528
esp_ble_mesh_gen_delta_set_t::tid (C++ *member*), 528
esp_ble_mesh_gen_delta_set_t::trans_time (C++ *member*), 528
esp_ble_mesh_gen_level_set_t (C++ *struct*), 528
esp_ble_mesh_gen_level_set_t::delay (C++ *member*), 528
esp_ble_mesh_gen_level_set_t::level (C++ *member*), 528
esp_ble_mesh_gen_level_set_t::op_en (C++ *member*), 528
esp_ble_mesh_gen_level_set_t::tid (C++ *member*), 528
esp_ble_mesh_gen_level_set_t::trans_time (C++ *member*), 528
esp_ble_mesh_gen_level_srv_t (C++ *struct*), 539
esp_ble_mesh_gen_level_srv_t::last (C++ *member*), 539
esp_ble_mesh_gen_level_srv_t::model (C++ *member*), 539
esp_ble_mesh_gen_level_srv_t::rsp_ctrl (C++ *member*), 539
esp_ble_mesh_gen_level_srv_t::state (C++ *member*), 539
esp_ble_mesh_gen_level_srv_t::transition (C++ *member*), 539
esp_ble_mesh_gen_level_srv_t::tt_delta_level (C++ *member*), 539
esp_ble_mesh_gen_level_state_t (C++ *struct*), 538
esp_ble_mesh_gen_level_state_t::last_delta (C++ *member*), 539
esp_ble_mesh_gen_level_state_t::last_level (C++ *member*), 538
esp_ble_mesh_gen_level_state_t::level (C++ *member*), 538
esp_ble_mesh_gen_level_state_t::move_start (C++ *member*), 539
esp_ble_mesh_gen_level_state_t::positive (C++ *member*), 539
esp_ble_mesh_gen_level_state_t::target_level (C++ *member*), 538
esp_ble_mesh_gen_level_status_cb_t (C++ *struct*), 533
esp_ble_mesh_gen_level_status_cb_t::op_en (C++ *member*), 533
esp_ble_mesh_gen_level_status_cb_t::present_level (C++ *member*), 533
esp_ble_mesh_gen_level_status_cb_t::remain_time (C++ *member*), 533
esp_ble_mesh_gen_level_status_cb_t::target_level (C++ *member*), 533
esp_ble_mesh_gen_loc_global_set_t (C++ *struct*), 530
esp_ble_mesh_gen_loc_global_set_t::global_altitud (C++ *member*), 530
esp_ble_mesh_gen_loc_global_set_t::global_latitud (C++ *member*), 530
esp_ble_mesh_gen_loc_global_set_t::global_longitu (C++ *member*), 530
esp_ble_mesh_gen_loc_global_status_cb_t (C++ *struct*), 535
esp_ble_mesh_gen_loc_global_status_cb_t::global_a (C++ *member*), 535
esp_ble_mesh_gen_loc_global_status_cb_t::global_l (C++ *member*), 535
esp_ble_mesh_gen_loc_global_status_cb_t::global_l (C++ *member*), 535
esp_ble_mesh_gen_loc_local_set_t (C++ *struct*), 530
esp_ble_mesh_gen_loc_local_set_t::floor_number (C++ *member*), 531
esp_ble_mesh_gen_loc_local_set_t::local_altitude (C++ *member*), 531
esp_ble_mesh_gen_loc_local_set_t::local_east (C++ *member*), 531
esp_ble_mesh_gen_loc_local_set_t::local_north (C++ *member*), 531
esp_ble_mesh_gen_loc_local_set_t::uncertainty (C++ *member*), 531
esp_ble_mesh_gen_loc_local_status_cb_t (C++ *struct*), 535
esp_ble_mesh_gen_loc_local_status_cb_t::floor_num (C++ *member*), 535
esp_ble_mesh_gen_loc_local_status_cb_t::local_alt (C++ *member*), 535
esp_ble_mesh_gen_loc_local_status_cb_t::local_eas (C++ *member*), 535
esp_ble_mesh_gen_loc_local_status_cb_t::local_nor (C++ *member*), 535
esp_ble_mesh_gen_loc_local_status_cb_t::uncertain

(C++ *member*), 535
esp_ble_mesh_gen_location_setup_srv_t (C++ *struct*), 543
esp_ble_mesh_gen_location_setup_srv_t::model (C++ *member*), 544
esp_ble_mesh_gen_location_setup_srv_t::rsp_ctrl (C++ *member*), 544
esp_ble_mesh_gen_location_setup_srv_t::state (C++ *member*), 544
esp_ble_mesh_gen_location_srv_t (C++ *struct*), 543
esp_ble_mesh_gen_location_srv_t::model (C++ *member*), 543
esp_ble_mesh_gen_location_srv_t::rsp_ctrl (C++ *member*), 543
esp_ble_mesh_gen_location_srv_t::state (C++ *member*), 543
esp_ble_mesh_gen_location_state_t (C++ *struct*), 543
esp_ble_mesh_gen_location_state_t::floor_number (C++ *member*), 543
esp_ble_mesh_gen_location_state_t::global_altitude (C++ *member*), 543
esp_ble_mesh_gen_location_state_t::global_latitude (C++ *member*), 543
esp_ble_mesh_gen_location_state_t::global_longitude (C++ *member*), 543
esp_ble_mesh_gen_location_state_t::local_altitude (C++ *member*), 543
esp_ble_mesh_gen_location_state_t::local_east (C++ *member*), 543
esp_ble_mesh_gen_location_state_t::local_north (C++ *member*), 543
esp_ble_mesh_gen_location_state_t::uncertainty (C++ *member*), 543
esp_ble_mesh_gen_manu_prop_access_t (C++ *enum*), 561
esp_ble_mesh_gen_manu_prop_access_t::ESP_BLE_MESH_GEN_MANU_ACCESS_READ (C++ *enumerator*), 561
esp_ble_mesh_gen_manu_prop_access_t::ESP_BLE_MESH_GEN_MANU_NOT_USER_PROP (C++ *enumerator*), 561
esp_ble_mesh_gen_manu_prop_srv_t (C++ *struct*), 545
esp_ble_mesh_gen_manu_prop_srv_t::model (C++ *member*), 545
esp_ble_mesh_gen_manu_prop_srv_t::properties (C++ *member*), 545
esp_ble_mesh_gen_manu_prop_srv_t::property_count (C++ *member*), 545
esp_ble_mesh_gen_manu_prop_srv_t::rsp_ctrl (C++ *member*), 545
esp_ble_mesh_gen_manufacturer_properties_state_t (C++ *struct*), 537
esp_ble_mesh_gen_manufacturer_properties_state_t::properties (C++ *member*), 537
esp_ble_mesh_gen_manufacturer_property_set_t (C++ *struct*), 532
esp_ble_mesh_gen_manufacturer_property_set_t::id (C++ *member*), 532
esp_ble_mesh_gen_manufacturer_property_set_t::property_id (C++ *member*), 532
esp_ble_mesh_gen_manufacturer_property_set_t::user_access (C++ *member*), 532
esp_ble_mesh_gen_manufacturer_property_status_cb_t (C++ *struct*), 537
esp_ble_mesh_gen_manufacturer_property_status_cb_t::id (C++ *member*), 537
esp_ble_mesh_gen_manufacturer_property_status_cb_t::length (C++ *member*), 537
esp_ble_mesh_gen_manufacturer_property_status_cb_t::property_id (C++ *member*), 537
esp_ble_mesh_gen_manufacturer_property_status_cb_t::user_access (C++ *member*), 537
esp_ble_mesh_gen_move_set_t (C++ *struct*), 529
esp_ble_mesh_gen_move_set_t::delay (C++ *member*), 529
esp_ble_mesh_gen_move_set_t::delta_level (C++ *member*), 529
esp_ble_mesh_gen_move_set_t::op_en (C++ *member*), 529
esp_ble_mesh_gen_move_set_t::tid (C++ *member*), 529
esp_ble_mesh_gen_move_set_t::trans_time (C++ *member*), 529
esp_ble_mesh_gen_onoff_set_t (C++ *struct*), 527
esp_ble_mesh_gen_onoff_set_t::delay (C++ *member*), 528
esp_ble_mesh_gen_onoff_set_t::onoff (C++ *member*), 527
esp_ble_mesh_gen_onoff_set_t::op_en (C++ *member*), 527
esp_ble_mesh_gen_onoff_set_t::tid (C++ *member*), 528
esp_ble_mesh_gen_onoff_set_t::trans_time (C++ *member*), 528
esp_ble_mesh_gen_onoff_srv_t (C++ *struct*), 538
esp_ble_mesh_gen_onoff_srv_t::last (C++ *member*), 538
esp_ble_mesh_gen_onoff_srv_t::model (C++ *member*), 538
esp_ble_mesh_gen_onoff_srv_t::rsp_ctrl (C++ *member*), 538
esp_ble_mesh_gen_onoff_srv_t::state (C++ *member*), 538
esp_ble_mesh_gen_onoff_srv_t::transition (C++ *member*), 538
esp_ble_mesh_gen_onoff_state_t (C++ *struct*), 538
esp_ble_mesh_gen_onoff_state_t::onoff (C++ *member*), 538
esp_ble_mesh_gen_onoff_state_t::target_onoff

(C++ member), 538
esp_ble_mesh_gen_onoff_status_cb_t (C++ struct), 532
esp_ble_mesh_gen_onoff_status_cb_t::op_en (C++ member), 532
esp_ble_mesh_gen_onoff_status_cb_t::present_onoff (C++ member), 533
esp_ble_mesh_gen_onoff_status_cb_t::remain_time (C++ member), 533
esp_ble_mesh_gen_onoff_status_cb_t::target_onoff (C++ member), 533
esp_ble_mesh_gen_onpowerup_set_t (C++ struct), 529
esp_ble_mesh_gen_onpowerup_set_t::onpowerup (C++ member), 529
esp_ble_mesh_gen_onpowerup_state_t (C++ struct), 540
esp_ble_mesh_gen_onpowerup_state_t::onpowerup (C++ member), 540
esp_ble_mesh_gen_onpowerup_status_cb_t (C++ struct), 533
esp_ble_mesh_gen_onpowerup_status_cb_t::onpowerup (C++ member), 533
esp_ble_mesh_gen_power_default_set_t (C++ struct), 530
esp_ble_mesh_gen_power_default_set_t::power (C++ member), 530
esp_ble_mesh_gen_power_default_status_cb_t (C++ struct), 534
esp_ble_mesh_gen_power_default_status_cb_t::power (C++ member), 534
esp_ble_mesh_gen_power_last_status_cb_t (C++ struct), 534
esp_ble_mesh_gen_power_last_status_cb_t::power (C++ member), 534
esp_ble_mesh_gen_power_level_set_t (C++ struct), 529
esp_ble_mesh_gen_power_level_set_t::delay (C++ member), 530
esp_ble_mesh_gen_power_level_set_t::op_en (C++ member), 529
esp_ble_mesh_gen_power_level_set_t::power (C++ member), 529
esp_ble_mesh_gen_power_level_set_t::tid (C++ member), 530
esp_ble_mesh_gen_power_level_set_t::trans_time (C++ member), 530
esp_ble_mesh_gen_power_level_setup_srv_t (C++ struct), 542
esp_ble_mesh_gen_power_level_setup_srv_t::model (C++ member), 542
esp_ble_mesh_gen_power_level_setup_srv_t::rsp_ctrl (C++ member), 542
esp_ble_mesh_gen_power_level_setup_srv_t::state (C++ member), 542
esp_ble_mesh_gen_power_level_srv_t (C++ struct), 541
esp_ble_mesh_gen_power_level_srv_t::last (C++ member), 541
esp_ble_mesh_gen_power_level_srv_t::model (C++ member), 541
esp_ble_mesh_gen_power_level_srv_t::rsp_ctrl (C++ member), 541
esp_ble_mesh_gen_power_level_srv_t::state (C++ member), 541
esp_ble_mesh_gen_power_level_srv_t::transition (C++ member), 541
esp_ble_mesh_gen_power_level_srv_t::tt_delta_level (C++ member), 541
esp_ble_mesh_gen_power_level_state_t (C++ struct), 540
esp_ble_mesh_gen_power_level_state_t::power_actual (C++ member), 541
esp_ble_mesh_gen_power_level_state_t::power_default (C++ member), 541
esp_ble_mesh_gen_power_level_state_t::power_last (C++ member), 541
esp_ble_mesh_gen_power_level_state_t::power_range_max (C++ member), 541
esp_ble_mesh_gen_power_level_state_t::power_range_min (C++ member), 541
esp_ble_mesh_gen_power_level_state_t::status_code (C++ member), 541
esp_ble_mesh_gen_power_level_state_t::target_power (C++ member), 541
esp_ble_mesh_gen_power_level_status_cb_t (C++ struct), 533
esp_ble_mesh_gen_power_level_status_cb_t::op_en (C++ member), 534
esp_ble_mesh_gen_power_level_status_cb_t::present_power (C++ member), 534
esp_ble_mesh_gen_power_level_status_cb_t::remain_time (C++ member), 534
esp_ble_mesh_gen_power_level_status_cb_t::target_power (C++ member), 534
esp_ble_mesh_gen_power_onoff_setup_srv_t (C++ struct), 540
esp_ble_mesh_gen_power_onoff_setup_srv_t::model (C++ member), 540
esp_ble_mesh_gen_power_onoff_setup_srv_t::rsp_ctrl (C++ member), 540
esp_ble_mesh_gen_power_onoff_setup_srv_t::state (C++ member), 540
esp_ble_mesh_gen_power_onoff_srv_t (C++ struct), 540
esp_ble_mesh_gen_power_onoff_srv_t::model (C++ member), 540
esp_ble_mesh_gen_power_onoff_srv_t::rsp_ctrl (C++ member), 540
esp_ble_mesh_gen_power_onoff_srv_t::state (C++ member), 540
esp_ble_mesh_gen_power_range_set_t (C++ struct), 530
esp_ble_mesh_gen_power_range_set_t::range_max (C++ member), 530
esp_ble_mesh_gen_power_range_set_t::range_min

(C++ *member*), 530
esp_ble_mesh_gen_power_range_status_cb_t (C++ *struct*), 534
esp_ble_mesh_gen_power_range_status_cb_t::range_max (C++ *member*), 534
esp_ble_mesh_gen_power_range_status_cb_t::range_min (C++ *member*), 534
esp_ble_mesh_gen_power_range_status_cb_t::status_code (C++ *member*), 534
esp_ble_mesh_gen_user_prop_access_t (C++ *enum*), 560
esp_ble_mesh_gen_user_prop_access_t::ESP_BLE_MESH_GEN_USER_ACCESS_PROHIBIT (C++ *enumerator*), 560
esp_ble_mesh_gen_user_prop_access_t::ESP_BLE_MESH_GEN_USER_ACCESS_READ (C++ *enumerator*), 560
esp_ble_mesh_gen_user_prop_access_t::ESP_BLE_MESH_GEN_USER_ACCESS_READ_WRITE (C++ *enumerator*), 560
esp_ble_mesh_gen_user_prop_access_t::ESP_BLE_MESH_GEN_USER_ACCESS_WRITE (C++ *enumerator*), 560
esp_ble_mesh_gen_user_prop_srv_t (C++ *struct*), 544
esp_ble_mesh_gen_user_prop_srv_t::model (C++ *member*), 544
esp_ble_mesh_gen_user_prop_srv_t::properties (C++ *member*), 544
esp_ble_mesh_gen_user_prop_srv_t::property_count (C++ *member*), 544
esp_ble_mesh_gen_user_prop_srv_t::rsp_ctrl (C++ *member*), 544
esp_ble_mesh_gen_user_properties_status_cb_t (C++ *struct*), 535
esp_ble_mesh_gen_user_properties_status_cb_t::properties (C++ *member*), 536
esp_ble_mesh_gen_user_property_get_t (C++ *struct*), 531
esp_ble_mesh_gen_user_property_get_t::property_id (C++ *member*), 531
esp_ble_mesh_gen_user_property_set_t (C++ *struct*), 531
esp_ble_mesh_gen_user_property_set_t::property_id (C++ *member*), 531
esp_ble_mesh_gen_user_property_set_t::property_value (C++ *member*), 531
esp_ble_mesh_gen_user_property_status_cb_t (C++ *struct*), 536
esp_ble_mesh_gen_user_property_status_cb_t::access (C++ *member*), 536
esp_ble_mesh_gen_user_property_status_cb_t::property_id (C++ *member*), 536
esp_ble_mesh_gen_user_property_status_cb_t::user_access (C++ *member*), 536
esp_ble_mesh_generic_client_cb_event_t (C++ *enum*), 560
esp_ble_mesh_generic_client_cb_event_t::ESP_BLE_MESH_GENERIC_CLIENT_EVT_MAX (C++ *enumerator*), 560
esp_ble_mesh_generic_client_cb_event_t::ESP_BLE_MESH_GENERIC_CLIENT_GET_STATE_EVT (C++ *enumerator*), 560
esp_ble_mesh_generic_client_cb_event_t::ESP_BLE_MESH_GENERIC_CLIENT_PUBLISH_EVT (C++ *enumerator*), 560
esp_ble_mesh_generic_client_cb_event_t::ESP_BLE_MESH_GENERIC_CLIENT_SET_STATE_EVT (C++ *enumerator*), 560
esp_ble_mesh_generic_client_cb_param_t (C++ *struct*), 537
esp_ble_mesh_generic_client_cb_param_t::error_code (C++ *member*), 537
esp_ble_mesh_generic_client_cb_param_t::params (C++ *member*), 537
esp_ble_mesh_generic_client_cb_param_t::status_cb (C++ *member*), 537
esp_ble_mesh_generic_client_get_state_t (C++ *type*), 559
esp_ble_mesh_generic_client_get_state_t (C++ *union*), 522
esp_ble_mesh_generic_client_get_state_t::admin_prop (C++ *member*), 522
esp_ble_mesh_generic_client_get_state_t::client_prop (C++ *member*), 522
esp_ble_mesh_generic_client_get_state_t::manufacturer_prop (C++ *member*), 522
esp_ble_mesh_generic_client_get_state_t::user_prop (C++ *member*), 522
esp_ble_mesh_generic_client_set_state (C++ *function*), 521
esp_ble_mesh_generic_client_set_state_t (C++ *union*), 522
esp_ble_mesh_generic_client_set_state_t::admin_prop (C++ *member*), 523
esp_ble_mesh_generic_client_set_state_t::def_trans_time (C++ *member*), 523
esp_ble_mesh_generic_client_set_state_t::delta_set (C++ *member*), 522
esp_ble_mesh_generic_client_set_state_t::level_set (C++ *member*), 522
esp_ble_mesh_generic_client_set_state_t::loc_global (C++ *member*), 523
esp_ble_mesh_generic_client_set_state_t::loc_local (C++ *member*), 523
esp_ble_mesh_generic_client_set_state_t::manufacturer_prop (C++ *member*), 523
esp_ble_mesh_generic_client_set_state_t::move_set (C++ *member*), 522
esp_ble_mesh_generic_client_set_state_t::onoff_set (C++ *member*), 522
esp_ble_mesh_generic_client_set_state_t::power_default (C++ *member*), 523
esp_ble_mesh_generic_client_set_state_t::power_level (C++ *member*), 523
esp_ble_mesh_generic_client_set_state_t::power_range_set (C++ *member*), 523
esp_ble_mesh_generic_client_set_state_t::power_set (C++ *member*), 523

(*C++ member*), 523
esp_ble_mesh_generic_client_set_state_t::user_property_set (*C++ member*), 523
esp_ble_mesh_generic_message_opcode_t (*C++ type*), 449
esp_ble_mesh_generic_property_t (*C++ struct*), 544
esp_ble_mesh_generic_property_t::admin_access (*C++ member*), 544
esp_ble_mesh_generic_property_t::id (*C++ member*), 544
esp_ble_mesh_generic_property_t::manu_access (*C++ member*), 544
esp_ble_mesh_generic_property_t::user_access (*C++ member*), 544
esp_ble_mesh_generic_property_t::val (*C++ member*), 544
esp_ble_mesh_generic_server_cb_event_t (*C++ enum*), 561
esp_ble_mesh_generic_server_cb_event_t::ESP_BLE_MESH_GENERIC_SERVER_EVT_MAX (*C++ enumerator*), 561
esp_ble_mesh_generic_server_cb_event_t::ESP_BLE_MESH_GENERIC_SERVER_RECV_GET_MSG_EVT (*C++ enumerator*), 561
esp_ble_mesh_generic_server_cb_event_t::ESP_BLE_MESH_GENERIC_SERVER_RECV_SET_MSG_EVT (*C++ enumerator*), 561
esp_ble_mesh_generic_server_cb_event_t::ESP_BLE_MESH_GENERIC_SERVER_STATE_CHANGE_EVT (*C++ enumerator*), 561
esp_ble_mesh_generic_server_cb_param_t (*C++ struct*), 554
esp_ble_mesh_generic_server_cb_param_t::ctx (*C++ member*), 554
esp_ble_mesh_generic_server_cb_param_t::model (*C++ member*), 554
esp_ble_mesh_generic_server_cb_param_t::value (*C++ member*), 554
esp_ble_mesh_generic_server_cb_t (*C++ type*), 560
esp_ble_mesh_generic_server_cb_value_t (*C++ union*), 527
esp_ble_mesh_generic_server_cb_value_t::get (*C++ member*), 527
esp_ble_mesh_generic_server_cb_value_t::set (*C++ member*), 527
esp_ble_mesh_generic_server_cb_value_t::state_change (*C++ member*), 527
esp_ble_mesh_generic_server_recv_get_msg_t (*C++ union*), 526
esp_ble_mesh_generic_server_recv_get_msg_t::admin_property (*C++ member*), 526
esp_ble_mesh_generic_server_recv_get_msg_t::client_properties (*C++ member*), 526
esp_ble_mesh_generic_server_recv_get_msg_t::manu_property (*C++ member*), 526
esp_ble_mesh_generic_server_recv_get_msg_t::user_property (*C++ member*), 526
esp_ble_mesh_generic_server_recv_set_msg_t (*C++ union*), 526
esp_ble_mesh_generic_server_recv_set_msg_t::admin_property (*C++ member*), 527
esp_ble_mesh_generic_server_recv_set_msg_t::def_t (*C++ member*), 526
esp_ble_mesh_generic_server_recv_set_msg_t::delta (*C++ member*), 526
esp_ble_mesh_generic_server_recv_set_msg_t::level (*C++ member*), 526
esp_ble_mesh_generic_server_recv_set_msg_t::locat (*C++ member*), 527
esp_ble_mesh_generic_server_recv_set_msg_t::locat (*C++ member*), 527
esp_ble_mesh_generic_server_recv_set_msg_t::manu_ (*C++ member*), 527
esp_ble_mesh_generic_server_recv_set_msg_t::move (*C++ member*), 526
esp_ble_mesh_generic_server_recv_set_msg_t::onoff (*C++ member*), 526
esp_ble_mesh_generic_server_recv_set_msg_t::onpow (*C++ member*), 526
esp_ble_mesh_generic_server_recv_set_msg_t::power (*C++ member*), 526
esp_ble_mesh_generic_server_recv_set_msg_t::power (*C++ member*), 526
esp_ble_mesh_generic_server_recv_set_msg_t::power (*C++ member*), 527
esp_ble_mesh_generic_server_recv_set_msg_t::user_ (*C++ member*), 527
esp_ble_mesh_generic_server_state_change_t (*C++ union*), 525
esp_ble_mesh_generic_server_state_change_t::admin (*C++ member*), 525
esp_ble_mesh_generic_server_state_change_t::def_t (*C++ member*), 525
esp_ble_mesh_generic_server_state_change_t::delta (*C++ member*), 525
esp_ble_mesh_generic_server_state_change_t::level (*C++ member*), 525
esp_ble_mesh_generic_server_state_change_t::loc_g (*C++ member*), 525
esp_ble_mesh_generic_server_state_change_t::loc_l (*C++ member*), 525
esp_ble_mesh_generic_server_state_change_t::manu_ (*C++ member*), 525
esp_ble_mesh_generic_server_state_change_t::move_ (*C++ member*), 525
esp_ble_mesh_generic_server_state_change_t::onoff (*C++ member*), 525
esp_ble_mesh_generic_server_state_change_t::onpow (*C++ member*), 525
esp_ble_mesh_generic_server_state_change_t::power (*C++ member*), 525
esp_ble_mesh_generic_server_state_change_t::power (*C++ member*), 525
esp_ble_mesh_generic_server_state_change_t::power (*C++ member*), 525
esp_ble_mesh_generic_server_state_change_t::user_ (*C++ member*), 525
esp_ble_mesh_generic_server_state_change_t::composition_data

(C++ *function*), 461
esp_ble_mesh_get_element_count (C++ *function*), 461
esp_ble_mesh_get_fast_prov_app_key (C++ *function*), 471
esp_ble_mesh_get_model_publish_period (C++ *function*), 460
esp_ble_mesh_get_primary_element_address (C++ *function*), 460
ESP_BLE_MESH_GET_PUBLISH_TRANSMIT_COUNT (C *macro*), 428
ESP_BLE_MESH_GET_PUBLISH_TRANSMIT_INTERVAL (C *macro*), 428
ESP_BLE_MESH_GET_SENSOR_DATA_FORMAT (C *macro*), 578
ESP_BLE_MESH_GET_SENSOR_DATA_LENGTH (C *macro*), 579
ESP_BLE_MESH_GET_SENSOR_DATA_PROPERTY_ID (C *macro*), 579
ESP_BLE_MESH_GET_TRANSMIT_COUNT (C *macro*), 428
ESP_BLE_MESH_GET_TRANSMIT_INTERVAL (C *macro*), 428
esp_ble_mesh_health_attention_off_cb_t (C++ *struct*), 517
esp_ble_mesh_health_attention_off_cb_t::model (C++ *member*), 517
esp_ble_mesh_health_attention_on_cb_t (C++ *struct*), 516
esp_ble_mesh_health_attention_on_cb_t::model (C++ *member*), 517
esp_ble_mesh_health_attention_on_cb_t::time (C++ *member*), 517
esp_ble_mesh_health_attention_set_t (C++ *struct*), 514
esp_ble_mesh_health_attention_set_t::attention (C++ *member*), 514
esp_ble_mesh_health_attention_status_cb (C++ *struct*), 515
esp_ble_mesh_health_attention_status_cb::attention (C++ *member*), 515
esp_ble_mesh_health_client_cb_event_t (C++ *enum*), 520
esp_ble_mesh_health_client_cb_event_t::ESP_BLE_MESH_HEALTH_CLIENT_EVT_MAX (C++ *enumerator*), 520
esp_ble_mesh_health_client_cb_event_t::ESP_BLE_MESH_HEALTH_CLIENT_GET_STATE_EVT (C++ *enumerator*), 520
esp_ble_mesh_health_client_cb_event_t::ESP_BLE_MESH_HEALTH_CLIENT_PUBLISH_EVT (C++ *enumerator*), 520
esp_ble_mesh_health_client_cb_event_t::ESP_BLE_MESH_HEALTH_CLIENT_SET_STATE_EVT (C++ *enumerator*), 520
esp_ble_mesh_health_client_cb_event_t::ESP_BLE_MESH_HEALTH_CLIENT_TIMEOUT_EVT (C++ *enumerator*), 520
esp_ble_mesh_health_client_cb_param_t (C++ *struct*), 515
esp_ble_mesh_health_client_cb_param_t::error_code (C++ *member*), 516
esp_ble_mesh_health_client_cb_param_t::params (C++ *member*), 516
esp_ble_mesh_health_client_cb_param_t::status_cb (C++ *member*), 516
esp_ble_mesh_health_client_cb_t (C++ *type*), 520
esp_ble_mesh_health_client_common_cb_param_t (C++ *union*), 511
esp_ble_mesh_health_client_common_cb_param_t::att (C++ *member*), 512
esp_ble_mesh_health_client_common_cb_param_t::cur (C++ *member*), 511
esp_ble_mesh_health_client_common_cb_param_t::fau (C++ *member*), 511
esp_ble_mesh_health_client_common_cb_param_t::per (C++ *member*), 512
esp_ble_mesh_health_client_get_state (C++ *function*), 510
esp_ble_mesh_health_client_get_state_t (C++ *union*), 511
esp_ble_mesh_health_client_get_state_t::fault_get (C++ *member*), 511
esp_ble_mesh_health_client_set_state (C++ *function*), 510
esp_ble_mesh_health_client_set_state_t (C++ *union*), 511
esp_ble_mesh_health_client_set_state_t::attention (C++ *member*), 511
esp_ble_mesh_health_client_set_state_t::fault_cle (C++ *member*), 511
esp_ble_mesh_health_client_set_state_t::fault_tes (C++ *member*), 511
esp_ble_mesh_health_client_set_state_t::period_se (C++ *member*), 511
esp_ble_mesh_health_current_status_cb_t (C++ *struct*), 514
esp_ble_mesh_health_current_status_cb_t::company_ (C++ *member*), 515
esp_ble_mesh_health_current_status_cb_t::fault_ar (C++ *member*), 515
esp_ble_mesh_health_current_status_cb_t::test_id (C++ *member*), 515
ESP_BLE_MESH_HEALTH_FAULT_ARRAY_SIZE (C *macro*), 520
esp_ble_mesh_health_fault_get_t (C++ *struct*), 513
esp_ble_mesh_health_fault_get_t::company_id (C++ *member*), 514
esp_ble_mesh_health_fault_status_cb_t

(C++ *struct*), 515
esp_ble_mesh_health_fault_status_cb_t::company_id (C++ *member*), 515
esp_ble_mesh_health_fault_status_cb_t::fault_array_len (C++ *member*), 515
esp_ble_mesh_health_fault_status_cb_t::test_id (C++ *member*), 515
esp_ble_mesh_health_fault_test_cb_t (C++ *struct*), 516
esp_ble_mesh_health_fault_test_cb_t::company_id (C++ *member*), 516
esp_ble_mesh_health_fault_test_cb_t::model_op (C++ *member*), 516
esp_ble_mesh_health_fault_test_cb_t::test_id (C++ *member*), 516
esp_ble_mesh_health_fault_test_t (C++ *struct*), 514
esp_ble_mesh_health_fault_test_t::company_id (C++ *member*), 514
esp_ble_mesh_health_fault_test_t::test_id (C++ *member*), 514
esp_ble_mesh_health_fault_update_comp_data_t (C++ *struct*), 516
esp_ble_mesh_health_fault_update_comp_cb_t::element_num (C++ *member*), 516
esp_ble_mesh_health_fault_update_comp_cb_t::model_op (C++ *member*), 516
esp_ble_mesh_health_model_status_t (C++ *type*), 449
esp_ble_mesh_health_period_set_t (C++ *struct*), 514
esp_ble_mesh_health_period_set_t::fast_period_divisor (C++ *member*), 514
esp_ble_mesh_health_period_status_cb_t (C++ *struct*), 515
esp_ble_mesh_health_period_status_cb_t::fast_period_divisor (C++ *member*), 515
ESP_BLE_MESH_HEALTH_PUB_DEFINE (C *macro*), 517
esp_ble_mesh_health_server_cb_event_t (C++ *enum*), 520
esp_ble_mesh_health_server_cb_event_t::ESP_BLE_MESH_HEALTH_SERVER_ATTENTION_OFF_EVT (C++ *enumerator*), 521
esp_ble_mesh_health_server_cb_event_t::ESP_BLE_MESH_HEALTH_SERVER_ATTENTION_ON_EVT (C++ *enumerator*), 521
esp_ble_mesh_health_server_cb_event_t::ESP_BLE_MESH_HEALTH_SERVER_EVT_MAX (C++ *enumerator*), 521
esp_ble_mesh_health_server_cb_event_t::ESP_BLE_MESH_HEALTH_SERVER_FAULT_CLEAR_EVT (C++ *enumerator*), 521
esp_ble_mesh_health_server_cb_event_t::ESP_BLE_MESH_HEALTH_SERVER_FAULT_TEST_EVT (C++ *enumerator*), 521
esp_ble_mesh_health_server_cb_event_t::ESP_BLE_MESH_HEALTH_SERVER_FAULT_UPDATE_COMP_EVT (C++ *enumerator*), 521
esp_ble_mesh_health_server_cb_param_t (C++ *union*), 512
esp_ble_mesh_health_server_cb_param_t::attention_off (C++ *member*), 512
esp_ble_mesh_health_server_cb_param_t::attention_on (C++ *member*), 512
esp_ble_mesh_health_server_cb_param_t::fault_clear (C++ *member*), 512
esp_ble_mesh_health_server_cb_param_t::fault_test (C++ *member*), 512
esp_ble_mesh_health_server_cb_param_t::fault_update (C++ *member*), 512
esp_ble_mesh_health_server_cb_t (C++ *type*), 520
esp_ble_mesh_health_server_fault_update (C++ *function*), 510
esp_ble_mesh_health_srv_cb_t (C++ *struct*), 512
esp_ble_mesh_health_srv_cb_t::attention_off (C++ *member*), 512
esp_ble_mesh_health_srv_cb_t::attention_on (C++ *member*), 512
esp_ble_mesh_health_srv_cb_t::fault_clear (C++ *member*), 512
esp_ble_mesh_health_srv_cb_t::fault_test (C++ *member*), 512
esp_ble_mesh_health_srv_t (C++ *struct*), 513
esp_ble_mesh_health_srv_t::attention_timer (C++ *member*), 513
esp_ble_mesh_health_srv_t::attention_timer_start (C++ *member*), 513
esp_ble_mesh_health_srv_t::health_cb (C++ *member*), 513
esp_ble_mesh_health_srv_t::health_test (C++ *member*), 513
esp_ble_mesh_health_srv_t::model (C++ *member*), 513
ESP_BLE_MESH_HEALTH_STANDARD_TEST (C *macro*), 517
esp_ble_mesh_health_test_t (C++ *struct*), 512
esp_ble_mesh_health_test_t::company_id (C++ *member*), 513
esp_ble_mesh_health_test_t::current_faults (C++ *member*), 513
esp_ble_mesh_health_test_t::id_count (C++ *member*), 513
esp_ble_mesh_health_test_t::prev_test_id (C++ *member*), 513
esp_ble_mesh_health_test_t::registered_faults (C++ *member*), 513
esp_ble_mesh_health_test_t::test_ids (C++ *member*), 513
ESP_BLE_MESH_HEARTBEAT_FILTER_ACCEPTLIST (C *macro*), 430
ESP_BLE_MESH_HEARTBEAT_FILTER_ADD (C *macro*), 430
esp_ble_mesh_heartbeat_filter_info_t (C++ *struct*), 422
esp_ble_mesh_heartbeat_filter_info_t::hb_dst (C++ *member*), 422
esp_ble_mesh_heartbeat_filter_info_t::hb_src (C++ *member*), 422

ESP_BLE_MESH_HEARTBEAT_FILTER_REJECTLIST (C macro), 430
ESP_BLE_MESH_HEARTBEAT_FILTER_REMOVE (C macro), 430
ESP_BLE_MESH_HOUSING_OPENED_ERROR (C macro), 519
ESP_BLE_MESH_HOUSING_OPENED_WARNING (C macro), 519
esp_ble_mesh_init (C++ function), 460
esp_ble_mesh_input_action_t (C++ enum), 451
esp_ble_mesh_input_action_t::ESP_BLE_MESH_ENTER_NUMBER (C++ enumerator), 451
esp_ble_mesh_input_action_t::ESP_BLE_MESH_ENTER_STRING (C++ enumerator), 451
esp_ble_mesh_input_action_t::ESP_BLE_MESH_NO_INPUT (C++ enumerator), 451
esp_ble_mesh_input_action_t::ESP_BLE_MESH_PUSH (C++ enumerator), 451
esp_ble_mesh_input_action_t::ESP_BLE_MESH_TWIST (C++ enumerator), 451
ESP_BLE_MESH_INPUT_NO_CHANGE_ERROR (C macro), 519
ESP_BLE_MESH_INPUT_NO_CHANGE_WARNING (C macro), 519
ESP_BLE_MESH_INPUT_TOO_HIGH_ERROR (C macro), 519
ESP_BLE_MESH_INPUT_TOO_HIGH_WARNING (C macro), 519
ESP_BLE_MESH_INPUT_TOO_LOW_ERROR (C macro), 519
ESP_BLE_MESH_INPUT_TOO_LOW_WARNING (C macro), 519
ESP_BLE_MESH_INTERNAL_BUS_ERROR (C macro), 520
ESP_BLE_MESH_INTERNAL_BUS_WARNING (C macro), 520
ESP_BLE_MESH_INVALID_NODE_INDEX (C macro), 427
ESP_BLE_MESH_INVALID_SCENE_NUMBER (C macro), 607
ESP_BLE_MESH_INVALID_SENSOR_PROPERTY_ID (C macro), 577
ESP_BLE_MESH_INVALID_SENSOR_SETTING_PROPERTY_ID (C macro), 577
ESP_BLE_MESH_INVALID_SETTINGS_IDX (C macro), 426
esp_ble_mesh_is_model_subscribed_to_group (C++ function), 460
ESP_BLE_MESH_KEY_ANY (C macro), 426
ESP_BLE_MESH_KEY_DEV (C macro), 426
ESP_BLE_MESH_KEY_PRIMARY (C macro), 426
ESP_BLE_MESH_KEY_UNUSED (C macro), 426
esp_ble_mesh_last_msg_info_t (C++ struct), 424
esp_ble_mesh_last_msg_info_t::dst (C++ member), 425
esp_ble_mesh_last_msg_info_t::src (C++ member), 425
esp_ble_mesh_last_msg_info_t::tid (C++ member), 424
esp_ble_mesh_last_msg_info_t::timestamp (C++ member), 425
esp_ble_mesh_lc_state_t (C++ enum), 664
esp_ble_mesh_lc_state_t::ESP_BLE_MESH_LC_FADE (C++ enumerator), 665
esp_ble_mesh_lc_state_t::ESP_BLE_MESH_LC_FADE_ON (C++ enumerator), 665
esp_ble_mesh_lc_state_t::ESP_BLE_MESH_LC_FADE_STA (C++ enumerator), 665
esp_ble_mesh_lc_state_t::ESP_BLE_MESH_LC_FADE_STA (C++ enumerator), 665
esp_ble_mesh_lc_state_t::ESP_BLE_MESH_LC_OFF (C++ enumerator), 664
esp_ble_mesh_lc_state_t::ESP_BLE_MESH_LC_PROLONG (C++ enumerator), 665
esp_ble_mesh_lc_state_t::ESP_BLE_MESH_LC_RUN (C++ enumerator), 665
esp_ble_mesh_lc_state_t::ESP_BLE_MESH_LC_STANDBY (C++ enumerator), 665
esp_ble_mesh_light_client_cb_event_t (C++ enum), 664
esp_ble_mesh_light_client_cb_event_t::ESP_BLE_MES (C++ enumerator), 664
esp_ble_mesh_light_client_cb_event_t::ESP_BLE_MES (C++ enumerator), 664
esp_ble_mesh_light_client_cb_event_t::ESP_BLE_MES (C++ enumerator), 664
esp_ble_mesh_light_client_cb_event_t::ESP_BLE_MES (C++ enumerator), 664
esp_ble_mesh_light_client_cb_event_t::ESP_BLE_MES (C++ enumerator), 664
esp_ble_mesh_light_client_cb_param_t (C++ struct), 633
esp_ble_mesh_light_client_cb_param_t::error_code (C++ member), 633
esp_ble_mesh_light_client_cb_param_t::params (C++ member), 633
esp_ble_mesh_light_client_cb_param_t::status_cb (C++ member), 633
esp_ble_mesh_light_client_cb_t (C++ type), 664
esp_ble_mesh_light_client_get_state (C++ function), 610
esp_ble_mesh_light_client_get_state_t (C++ union), 611
esp_ble_mesh_light_client_get_state_t::lc_propert (C++ member), 611
esp_ble_mesh_light_client_set_state (C++ function), 610
esp_ble_mesh_light_client_set_state_t (C++ union), 611
esp_ble_mesh_light_client_set_state_t::ctl_defaul (C++ member), 611
esp_ble_mesh_light_client_set_state_t::ctl_set (C++ member), 611

esp_ble_mesh_light_client_set_state_t::esp_ble_mesh_lightness_client_status_cb_t::lc_light_o
(C++ member), 611 (C++ member), 614
esp_ble_mesh_light_client_set_state_t::esp_ble_mesh_lightness_client_status_cb_t::lc_mode_st
(C++ member), 611 (C++ member), 614
esp_ble_mesh_light_client_set_state_t::esp_ble_mesh_light_client_status_cb_t::lc_om_stat
(C++ member), 612 (C++ member), 614
esp_ble_mesh_light_client_set_state_t::esp_ble_mesh_light_client_status_cb_t::lc_propert
(C++ member), 611 (C++ member), 614
esp_ble_mesh_light_client_set_state_t::esp_ble_mesh_lightness_client_status_cb_t::lightness_
(C++ member), 612 (C++ member), 613
esp_ble_mesh_light_client_set_state_t::esp_ble_mesh_lightness_client_status_cb_t::lightness_
(C++ member), 612 (C++ member), 613
esp_ble_mesh_light_client_set_state_t::esp_ble_mesh_lightness_client_status_cb_t::lightness_
(C++ member), 611 (C++ member), 612
esp_ble_mesh_light_client_set_state_t::esp_ble_mesh_lightness_client_status_cb_t::lightness_
(C++ member), 612 (C++ member), 613
esp_ble_mesh_light_client_set_state_t::esp_ble_mesh_lightness_client_status_cb_t::lightness_
(C++ member), 612 (C++ member), 612
esp_ble_mesh_light_client_set_state_t::esp_ble_mesh_light_client_status_cb_t::xyl_defaul
(C++ member), 612 (C++ member), 613
esp_ble_mesh_light_client_set_state_t::esp_ble_mesh_light_client_status_cb_t::xyl_range_
(C++ member), 612 (C++ member), 614
esp_ble_mesh_light_client_set_state_t::esp_ble_mesh_light_client_status_cb_t::xyl_status
(C++ member), 611 (C++ member), 613
esp_ble_mesh_light_client_set_state_t::esp_ble_mesh_light_client_status_cb_t::xyl_target
(C++ member), 611 (C++ member), 613
esp_ble_mesh_light_client_set_state_t::esp_ble_mesh_light_control_t (C++ struct),
(C++ member), 611 645
esp_ble_mesh_light_client_set_state_t::esp_ble_mesh_light_control_t::prop_state
(C++ member), 611 (C++ member), 645
esp_ble_mesh_light_client_set_state_t::esp_ble_mesh_light_control_t::state
(C++ member), 612 (C++ member), 645
esp_ble_mesh_light_client_set_state_t::esp_ble_mesh_light_control_t::state_machine
(C++ member), 612 (C++ member), 645
esp_ble_mesh_light_client_set_state_t::esp_ble_mesh_light_ctl_default_set_t
(C++ member), 612 (C++ struct), 620
esp_ble_mesh_light_client_status_cb_t esp_ble_mesh_light_ctl_default_set_t::delta_uv
(C++ union), 612 (C++ member), 620
esp_ble_mesh_light_client_status_cb_t::esp_ble_mesh_light_ctl_default_set_t::lightness
(C++ member), 613 (C++ member), 620
esp_ble_mesh_light_client_status_cb_t::esp_ble_mesh_light_ctl_default_set_t::temperature
(C++ member), 613 (C++ member), 620
esp_ble_mesh_light_client_status_cb_t::esp_ble_mesh_light_ctl_default_status_cb_t
(C++ member), 613 (C++ struct), 628
esp_ble_mesh_light_client_status_cb_t::esp_ble_mesh_light_ctl_default_status_cb_t::delta
(C++ member), 613 (C++ member), 628
esp_ble_mesh_light_client_status_cb_t::esp_ble_mesh_light_ctl_default_status_cb_t::light
(C++ member), 613 (C++ member), 628
esp_ble_mesh_light_client_status_cb_t::esp_ble_mesh_light_ctl_default_status_cb_t::tempe
(C++ member), 613 (C++ member), 628
esp_ble_mesh_light_client_status_cb_t::esp_ble_mesh_light_ctl_set_t (C++ struct),
(C++ member), 613 619
esp_ble_mesh_light_client_status_cb_t::esp_ble_mesh_light_ctl_set_t::ctl_delta_uv
(C++ member), 613 (C++ member), 619
esp_ble_mesh_light_client_status_cb_t::esp_ble_mesh_light_ctl_set_t::ctl_lightness
(C++ member), 613 (C++ member), 619
esp_ble_mesh_light_client_status_cb_t::esp_ble_mesh_light_ctl_set_t::ctl_temperatrue
(C++ member), 613 (C++ member), 619

esp_ble_mesh_light_ctl_set_t::delay (C++ member), 619
esp_ble_mesh_light_ctl_set_t::op_en (C++ member), 619
esp_ble_mesh_light_ctl_set_t::tid (C++ member), 619
esp_ble_mesh_light_ctl_set_t::trans_time (C++ member), 619
esp_ble_mesh_light_ctl_setup_srv_t (C++ struct), 636
esp_ble_mesh_light_ctl_setup_srv_t::model (C++ member), 636
esp_ble_mesh_light_ctl_setup_srv_t::rsp_ctrl (C++ member), 636
esp_ble_mesh_light_ctl_setup_srv_t::state (C++ member), 636
esp_ble_mesh_light_ctl_srv_t (C++ struct), 635
esp_ble_mesh_light_ctl_srv_t::last (C++ member), 636
esp_ble_mesh_light_ctl_srv_t::model (C++ member), 636
esp_ble_mesh_light_ctl_srv_t::rsp_ctrl (C++ member), 636
esp_ble_mesh_light_ctl_srv_t::state (C++ member), 636
esp_ble_mesh_light_ctl_srv_t::transition (C++ member), 636
esp_ble_mesh_light_ctl_srv_t::tt_delta_delta (C++ member), 636
esp_ble_mesh_light_ctl_srv_t::tt_delta_temp (C++ member), 636
esp_ble_mesh_light_ctl_srv_t::tt_delta_uv (C++ member), 636
esp_ble_mesh_light_ctl_state_t (C++ struct), 635
esp_ble_mesh_light_ctl_state_t::delta_uv (C++ member), 635
esp_ble_mesh_light_ctl_state_t::delta_uv_default (C++ member), 635
esp_ble_mesh_light_ctl_state_t::lightness (C++ member), 635
esp_ble_mesh_light_ctl_state_t::lightness_default (C++ member), 635
esp_ble_mesh_light_ctl_state_t::status_code (C++ member), 635
esp_ble_mesh_light_ctl_state_t::target_delta_uv (C++ member), 635
esp_ble_mesh_light_ctl_state_t::target_lightness (C++ member), 635
esp_ble_mesh_light_ctl_state_t::target_temperature (C++ member), 635
esp_ble_mesh_light_ctl_state_t::temperature (C++ member), 635
esp_ble_mesh_light_ctl_state_t::temperature_default (C++ member), 635
esp_ble_mesh_light_ctl_state_t::temperature_max (C++ member), 635
esp_ble_mesh_light_ctl_state_t::temperature_range (C++ member), 635
esp_ble_mesh_light_ctl_status_cb_t (C++ struct), 626
esp_ble_mesh_light_ctl_status_cb_t::op_en (C++ member), 626
esp_ble_mesh_light_ctl_status_cb_t::present_ctl_l (C++ member), 626
esp_ble_mesh_light_ctl_status_cb_t::present_ctl_t (C++ member), 626
esp_ble_mesh_light_ctl_status_cb_t::remain_time (C++ member), 627
esp_ble_mesh_light_ctl_status_cb_t::target_ctl_li (C++ member), 627
esp_ble_mesh_light_ctl_status_cb_t::target_ctl_te (C++ member), 627
esp_ble_mesh_light_ctl_temp_srv_t (C++ struct), 636
esp_ble_mesh_light_ctl_temp_srv_t::last (C++ member), 637
esp_ble_mesh_light_ctl_temp_srv_t::model (C++ member), 636
esp_ble_mesh_light_ctl_temp_srv_t::rsp_ctrl (C++ member), 636
esp_ble_mesh_light_ctl_temp_srv_t::state (C++ member), 637
esp_ble_mesh_light_ctl_temp_srv_t::transition (C++ member), 637
esp_ble_mesh_light_ctl_temp_srv_t::tt_delta_delta (C++ member), 637
esp_ble_mesh_light_ctl_temp_srv_t::tt_delta_tempe (C++ member), 637
esp_ble_mesh_light_ctl_temperature_range_set_t (C++ struct), 620
esp_ble_mesh_light_ctl_temperature_range_set_t::r (C++ member), 620
esp_ble_mesh_light_ctl_temperature_range_set_t::r (C++ member), 620
esp_ble_mesh_light_ctl_temperature_range_status_c (C++ struct), 627
esp_ble_mesh_light_ctl_temperature_range_status_c (C++ member), 627
esp_ble_mesh_light_ctl_temperature_range_status_c (C++ member), 627
esp_ble_mesh_light_ctl_temperature_range_status_c (C++ member), 627
esp_ble_mesh_light_ctl_temperature_set_t (C++ struct), 619
esp_ble_mesh_light_ctl_temperature_set_t::ctl_del (C++ member), 619
esp_ble_mesh_light_ctl_temperature_set_t::ctl_tem (C++ member), 619
esp_ble_mesh_light_ctl_temperature_set_t::delay (C++ member), 620
esp_ble_mesh_light_ctl_temperature_set_t::op_en (C++ member), 619
esp_ble_mesh_light_ctl_temperature_set_t::tid (C++ member), 619

esp_ble_mesh_light_ctl_temperature_set_t::trans_time (C++ member), 620
esp_ble_mesh_light_ctl_temperature_status_cb_t (C++ struct), 627
esp_ble_mesh_light_ctl_temperature_status_cb_t::op_en (C++ member), 627
esp_ble_mesh_light_ctl_temperature_status_cb_t::present_temperature (C++ member), 627
esp_ble_mesh_light_ctl_temperature_status_cb_t::present_temperature_delta (C++ member), 627
esp_ble_mesh_light_ctl_temperature_status_cb_t::remain_time (C++ member), 627
esp_ble_mesh_light_ctl_temperature_status_cb_t::target_temperature (C++ member), 627
esp_ble_mesh_light_ctl_temperature_status_cb_t::target_temperature_delta (C++ member), 627
esp_ble_mesh_light_hsl_default_set_t (C++ struct), 622
esp_ble_mesh_light_hsl_default_set_t::hue (C++ member), 622
esp_ble_mesh_light_hsl_default_set_t::lightness (C++ member), 622
esp_ble_mesh_light_hsl_default_set_t::saturation (C++ member), 622
esp_ble_mesh_light_hsl_default_status_cb_t (C++ struct), 629
esp_ble_mesh_light_hsl_default_status_cb_t::hue (C++ member), 630
esp_ble_mesh_light_hsl_default_status_cb_t::lightness (C++ member), 630
esp_ble_mesh_light_hsl_default_status_cb_t::saturation (C++ member), 630
esp_ble_mesh_light_hsl_hue_set_t (C++ struct), 621
esp_ble_mesh_light_hsl_hue_set_t::delay (C++ member), 621
esp_ble_mesh_light_hsl_hue_set_t::hue (C++ member), 621
esp_ble_mesh_light_hsl_hue_set_t::op_en (C++ member), 621
esp_ble_mesh_light_hsl_hue_set_t::tid (C++ member), 621
esp_ble_mesh_light_hsl_hue_set_t::trans_time (C++ member), 621
esp_ble_mesh_light_hsl_hue_srv_t (C++ struct), 639
esp_ble_mesh_light_hsl_hue_srv_t::last (C++ member), 639
esp_ble_mesh_light_hsl_hue_srv_t::model (C++ member), 639
esp_ble_mesh_light_hsl_hue_srv_t::rsp_ctrl (C++ member), 639
esp_ble_mesh_light_hsl_hue_srv_t::state (C++ member), 639
esp_ble_mesh_light_hsl_hue_srv_t::transition (C++ member), 639
esp_ble_mesh_light_hsl_hue_srv_t::tt_delta_hue (C++ member), 639
esp_ble_mesh_light_hsl_hue_status_cb_t (C++ struct), 629
esp_ble_mesh_light_hsl_hue_status_cb_t::op_en (C++ member), 629
esp_ble_mesh_light_hsl_hue_status_cb_t::present_hue (C++ member), 629
esp_ble_mesh_light_hsl_hue_status_cb_t::remain_time (C++ member), 629
esp_ble_mesh_light_hsl_hue_status_cb_t::target_hue (C++ member), 629
esp_ble_mesh_light_hsl_range_set_t (C++ struct), 622
esp_ble_mesh_light_hsl_range_set_t::hue_range_max (C++ member), 622
esp_ble_mesh_light_hsl_range_set_t::hue_range_min (C++ member), 622
esp_ble_mesh_light_hsl_range_set_t::saturation_range_max (C++ member), 622
esp_ble_mesh_light_hsl_range_set_t::saturation_range_min (C++ member), 622
esp_ble_mesh_light_hsl_range_status_cb_t (C++ struct), 630
esp_ble_mesh_light_hsl_range_status_cb_t::hue_range_max (C++ member), 630
esp_ble_mesh_light_hsl_range_status_cb_t::hue_range_min (C++ member), 630
esp_ble_mesh_light_hsl_range_status_cb_t::saturation_range_max (C++ member), 630
esp_ble_mesh_light_hsl_range_status_cb_t::saturation_range_min (C++ member), 630
esp_ble_mesh_light_hsl_range_status_cb_t::status_code (C++ member), 630
esp_ble_mesh_light_hsl_sat_srv_t (C++ struct), 639
esp_ble_mesh_light_hsl_sat_srv_t::last (C++ member), 639
esp_ble_mesh_light_hsl_sat_srv_t::model (C++ member), 639
esp_ble_mesh_light_hsl_sat_srv_t::rsp_ctrl (C++ member), 639
esp_ble_mesh_light_hsl_sat_srv_t::state (C++ member), 639
esp_ble_mesh_light_hsl_sat_srv_t::transition (C++ member), 640
esp_ble_mesh_light_hsl_sat_srv_t::tt_delta_saturation (C++ member), 640
esp_ble_mesh_light_hsl_saturation_set_t (C++ struct), 621
esp_ble_mesh_light_hsl_saturation_set_t::delay (C++ member), 622
esp_ble_mesh_light_hsl_saturation_set_t::op_en (C++ member), 621
esp_ble_mesh_light_hsl_saturation_set_t::saturation (C++ member), 621
esp_ble_mesh_light_hsl_saturation_set_t::tid (C++ member), 621
esp_ble_mesh_light_hsl_saturation_set_t::trans_time (C++ member), 622

esp_ble_mesh_light_hsl_saturation_status_cb_t (C++ struct), 629
esp_ble_mesh_light_hsl_saturation_status_cb_t::hsl_saturation (C++ member), 629
esp_ble_mesh_light_hsl_saturation_status_cb_t::op_en (C++ member), 629
esp_ble_mesh_light_hsl_saturation_status_cb_t::remain_time (C++ member), 629
esp_ble_mesh_light_hsl_saturation_status_cb_t::target_hsl_saturation (C++ member), 629
esp_ble_mesh_light_hsl_set_t (C++ struct), 620
esp_ble_mesh_light_hsl_set_t::delay (C++ member), 621
esp_ble_mesh_light_hsl_set_t::hsl_hue (C++ member), 620
esp_ble_mesh_light_hsl_set_t::hsl_lightness (C++ member), 620
esp_ble_mesh_light_hsl_set_t::hsl_saturation (C++ member), 621
esp_ble_mesh_light_hsl_set_t::op_en (C++ member), 620
esp_ble_mesh_light_hsl_set_t::tid (C++ member), 621
esp_ble_mesh_light_hsl_set_t::trans_time (C++ member), 621
esp_ble_mesh_light_hsl_setup_srv_t (C++ struct), 638
esp_ble_mesh_light_hsl_setup_srv_t::model (C++ member), 639
esp_ble_mesh_light_hsl_setup_srv_t::rsp_ctrl (C++ member), 639
esp_ble_mesh_light_hsl_setup_srv_t::state (C++ member), 639
esp_ble_mesh_light_hsl_srv_t (C++ struct), 638
esp_ble_mesh_light_hsl_srv_t::last (C++ member), 638
esp_ble_mesh_light_hsl_srv_t::model (C++ member), 638
esp_ble_mesh_light_hsl_srv_t::rsp_ctrl (C++ member), 638
esp_ble_mesh_light_hsl_srv_t::state (C++ member), 638
esp_ble_mesh_light_hsl_srv_t::transition (C++ member), 638
esp_ble_mesh_light_hsl_srv_t::tt_delta_hue (C++ member), 638
esp_ble_mesh_light_hsl_srv_t::tt_delta_lightness (C++ member), 638
esp_ble_mesh_light_hsl_srv_t::tt_delta_saturation (C++ member), 638
esp_ble_mesh_light_hsl_state_t (C++ struct), 637
esp_ble_mesh_light_hsl_state_t::hue (C++ member), 637
esp_ble_mesh_light_hsl_state_t::hue_default (C++ member), 637
esp_ble_mesh_light_hsl_state_t::hue_range_max (C++ member), 638
esp_ble_mesh_light_hsl_state_t::hue_range_min (C++ member), 638
esp_ble_mesh_light_hsl_state_t::lightness (C++ member), 637
esp_ble_mesh_light_hsl_state_t::lightness_default (C++ member), 637
esp_ble_mesh_light_hsl_state_t::saturation (C++ member), 637
esp_ble_mesh_light_hsl_state_t::saturation_default (C++ member), 637
esp_ble_mesh_light_hsl_state_t::saturation_range_max (C++ member), 638
esp_ble_mesh_light_hsl_state_t::saturation_range_min (C++ member), 638
esp_ble_mesh_light_hsl_state_t::status_code (C++ member), 638
esp_ble_mesh_light_hsl_state_t::target_hue (C++ member), 637
esp_ble_mesh_light_hsl_state_t::target_lightness (C++ member), 637
esp_ble_mesh_light_hsl_state_t::target_saturation (C++ member), 637
esp_ble_mesh_light_hsl_status_cb_t (C++ struct), 628
esp_ble_mesh_light_hsl_status_cb_t::hsl_hue (C++ member), 628
esp_ble_mesh_light_hsl_status_cb_t::hsl_lightness (C++ member), 628
esp_ble_mesh_light_hsl_status_cb_t::hsl_saturation (C++ member), 628
esp_ble_mesh_light_hsl_status_cb_t::op_en (C++ member), 628
esp_ble_mesh_light_hsl_status_cb_t::remain_time (C++ member), 628
esp_ble_mesh_light_hsl_target_status_cb_t (C++ struct), 628
esp_ble_mesh_light_hsl_target_status_cb_t::hsl_hue (C++ member), 629
esp_ble_mesh_light_hsl_target_status_cb_t::hsl_lightness (C++ member), 628
esp_ble_mesh_light_hsl_target_status_cb_t::hsl_saturation (C++ member), 629
esp_ble_mesh_light_hsl_target_status_cb_t::op_en (C++ member), 628
esp_ble_mesh_light_hsl_target_status_cb_t::remain_time (C++ member), 629
esp_ble_mesh_light_lc_light_onoff_set_t (C++ struct), 624
esp_ble_mesh_light_lc_light_onoff_set_t::delay (C++ member), 624
esp_ble_mesh_light_lc_light_onoff_set_t::light_on_off (C++ member), 624
esp_ble_mesh_light_lc_light_onoff_set_t::op_en (C++ member), 624
esp_ble_mesh_light_lc_light_onoff_set_t::tid (C++ member), 624

esp_ble_mesh_light_lc_light_onoff_set_t::trans_time (C++ member), 624
esp_ble_mesh_light_lc_light_onoff_status_cb_t (C++ struct), 632
esp_ble_mesh_light_lc_light_onoff_status_cb_t::remain_time (C++ member), 632
esp_ble_mesh_light_lc_light_onoff_status_cb_t::present_light_onoff (C++ member), 632
esp_ble_mesh_light_lc_light_onoff_status_cb_t::remain_time (C++ member), 632
esp_ble_mesh_light_lc_light_onoff_status_cb_t::target_light_onoff (C++ member), 632
esp_ble_mesh_light_lc_mode_set_t (C++ struct), 624
esp_ble_mesh_light_lc_mode_set_t::mode (C++ member), 624
esp_ble_mesh_light_lc_mode_status_cb_t (C++ struct), 632
esp_ble_mesh_light_lc_mode_status_cb_t::mode (C++ member), 632
esp_ble_mesh_light_lc_om_set_t (C++ struct), 624
esp_ble_mesh_light_lc_om_set_t::mode (C++ member), 624
esp_ble_mesh_light_lc_om_status_cb_t (C++ struct), 632
esp_ble_mesh_light_lc_om_status_cb_t::mode (C++ member), 632
esp_ble_mesh_light_lc_property_get_t (C++ struct), 624
esp_ble_mesh_light_lc_property_get_t::property_id (C++ member), 625
esp_ble_mesh_light_lc_property_set_t (C++ struct), 625
esp_ble_mesh_light_lc_property_set_t::property_id (C++ member), 625
esp_ble_mesh_light_lc_property_set_t::property_value (C++ member), 625
esp_ble_mesh_light_lc_property_state_t (C++ struct), 642
esp_ble_mesh_light_lc_property_state_t::ambient_lux_level_on (C++ member), 643
esp_ble_mesh_light_lc_property_state_t::ambient_lux_level_prolong (C++ member), 643
esp_ble_mesh_light_lc_property_state_t::ambient_lux_level_standby (C++ member), 643
esp_ble_mesh_light_lc_property_state_t::lightness_on (C++ member), 643
esp_ble_mesh_light_lc_property_state_t::lightness_prolong (C++ member), 643
esp_ble_mesh_light_lc_property_state_t::lightness_standby (C++ member), 643
esp_ble_mesh_light_lc_property_state_t::regulator_accuracy (C++ member), 644
esp_ble_mesh_light_lc_property_state_t::regulator_kid (C++ member), 644
esp_ble_mesh_light_lc_property_state_t::regulator_kiu (C++ member), 644
esp_ble_mesh_light_lc_property_state_t::regulator_kp (C++ member), 644
esp_ble_mesh_light_lc_property_state_t::regulator_ki (C++ member), 644
esp_ble_mesh_light_lc_property_state_t::set_occupancy (C++ member), 644
esp_ble_mesh_light_lc_property_state_t::time_fade (C++ member), 643
esp_ble_mesh_light_lc_property_state_t::time_fade_on (C++ member), 643
esp_ble_mesh_light_lc_property_state_t::time_fade_standby_auto (C++ member), 643
esp_ble_mesh_light_lc_property_state_t::time_fade_standby_manual (C++ member), 643
esp_ble_mesh_light_lc_property_state_t::time_occupancy_delay (C++ member), 642
esp_ble_mesh_light_lc_property_state_t::time_prolong (C++ member), 643
esp_ble_mesh_light_lc_property_state_t::time_run_on (C++ member), 643
esp_ble_mesh_light_lc_property_status_cb_t (C++ struct), 632
esp_ble_mesh_light_lc_property_status_cb_t::property_id (C++ member), 633
esp_ble_mesh_light_lc_property_status_cb_t::property_value (C++ member), 633
esp_ble_mesh_light_lc_setup_srv_t (C++ struct), 646
esp_ble_mesh_light_lc_setup_srv_t::lc (C++ member), 646
esp_ble_mesh_light_lc_setup_srv_t::model (C++ member), 646
esp_ble_mesh_light_lc_setup_srv_t::rsp_ctrl (C++ member), 646
esp_ble_mesh_light_lc_srv_t (C++ struct), 645
esp_ble_mesh_light_lc_srv_t::last (C++ member), 645
esp_ble_mesh_light_lc_srv_t::lc (C++ member), 645
esp_ble_mesh_light_lc_srv_t::model (C++ member), 645
esp_ble_mesh_light_lc_srv_t::rsp_ctrl (C++ member), 645
esp_ble_mesh_light_lc_srv_t::transition (C++ member), 645
esp_ble_mesh_light_lightness_srv_t (C++ struct), 644
esp_ble_mesh_light_lightness_srv_t::fade (C++ member), 644
esp_ble_mesh_light_lightness_srv_t::fade_on (C++ member), 644
esp_ble_mesh_light_lightness_srv_t::fade_standby (C++ member), 644
esp_ble_mesh_light_lightness_srv_t::fade_standby_auto (C++ member), 644
esp_ble_mesh_light_lightness_srv_t::last (C++ member), 645
esp_ble_mesh_light_lightness_srv_t::state (C++ member), 645

esp_ble_mesh_light_lc_state_machine_t::timer (C++ member), 645
esp_ble_mesh_light_lc_state_machine_t::tt_delta (C++ member), 645
esp_ble_mesh_light_lc_state_t (C++ struct), 642
esp_ble_mesh_light_lc_state_t::ambient_luxlevel (C++ member), 642
esp_ble_mesh_light_lc_state_t::light_onoff (C++ member), 642
esp_ble_mesh_light_lc_state_t::linear_output (C++ member), 642
esp_ble_mesh_light_lc_state_t::mode (C++ member), 642
esp_ble_mesh_light_lc_state_t::occupancy (C++ member), 642
esp_ble_mesh_light_lc_state_t::occupancy_mode (C++ member), 642
esp_ble_mesh_light_lc_state_t::target_lightness_onoff (C++ member), 642
esp_ble_mesh_light_lightness_default_set_t (C++ struct), 618
esp_ble_mesh_light_lightness_default_set_t::lightness (C++ member), 618
esp_ble_mesh_light_lightness_default_status_cb_t (C++ struct), 626
esp_ble_mesh_light_lightness_default_status_cb_t::lightness (C++ member), 626
esp_ble_mesh_light_lightness_last_status_cb_t (C++ struct), 626
esp_ble_mesh_light_lightness_last_status_cb_t::lightness (C++ member), 626
esp_ble_mesh_light_lightness_linear_set_t (C++ struct), 618
esp_ble_mesh_light_lightness_linear_set_t::delay (C++ member), 618
esp_ble_mesh_light_lightness_linear_set_t::lightness (C++ member), 618
esp_ble_mesh_light_lightness_linear_set_t::op_en (C++ member), 618
esp_ble_mesh_light_lightness_linear_set_t::tid (C++ member), 618
esp_ble_mesh_light_lightness_linear_set_t::trans_time (C++ member), 618
esp_ble_mesh_light_lightness_linear_status_cb_t (C++ struct), 625
esp_ble_mesh_light_lightness_linear_status_cb_t::set (C++ member), 625
esp_ble_mesh_light_lightness_linear_status_cb_t::set_lightness (C++ member), 625
esp_ble_mesh_light_lightness_linear_status_cb_t::remain_time (C++ member), 626
esp_ble_mesh_light_lightness_linear_status_cb_t::target_lightness (C++ member), 625
esp_ble_mesh_light_lightness_range_set_t (C++ struct), 618
esp_ble_mesh_light_lightness_range_set_t::range_max (C++ member), 619
esp_ble_mesh_light_lightness_range_set_t::range_min (C++ member), 619
esp_ble_mesh_light_lightness_range_status_cb_t (C++ struct), 626
esp_ble_mesh_light_lightness_range_status_cb_t::range_max (C++ member), 626
esp_ble_mesh_light_lightness_range_status_cb_t::range_min (C++ member), 626
esp_ble_mesh_light_lightness_range_status_cb_t::status_code (C++ member), 626
esp_ble_mesh_light_lightness_set_t (C++ struct), 617
esp_ble_mesh_light_lightness_set_t::delay (C++ member), 618
esp_ble_mesh_light_lightness_set_t::lightness (C++ member), 618
esp_ble_mesh_light_lightness_set_t::op_en (C++ member), 617
esp_ble_mesh_light_lightness_set_t::tid (C++ member), 618
esp_ble_mesh_light_lightness_set_t::trans_time (C++ member), 618
esp_ble_mesh_light_lightness_setup_srv_t (C++ struct), 634
esp_ble_mesh_light_lightness_setup_srv_t::model (C++ member), 634
esp_ble_mesh_light_lightness_setup_srv_t::rsp_ctrl (C++ member), 634
esp_ble_mesh_light_lightness_setup_srv_t::state (C++ member), 634
esp_ble_mesh_light_lightness_srv_t (C++ struct), 634
esp_ble_mesh_light_lightness_srv_t::actual_transi (C++ member), 634
esp_ble_mesh_light_lightness_srv_t::last (C++ member), 634
esp_ble_mesh_light_lightness_srv_t::linear_transi (C++ member), 634
esp_ble_mesh_light_lightness_srv_t::model (C++ member), 634
esp_ble_mesh_light_lightness_srv_t::rsp_ctrl (C++ member), 634
esp_ble_mesh_light_lightness_srv_t::state (C++ member), 634
esp_ble_mesh_light_lightness_srv_t::tt_delta_ligh (C++ member), 634
esp_ble_mesh_light_lightness_srv_t::tt_delta_ligh (C++ member), 634
esp_ble_mesh_light_lightness_state_t (C++ struct), 633
esp_ble_mesh_light_lightness_state_t::lightness_a (C++ member), 633
esp_ble_mesh_light_lightness_state_t::lightness_d (C++ member), 633
esp_ble_mesh_light_lightness_state_t::lightness_l (C++ member), 633
esp_ble_mesh_light_lightness_state_t::lightness_l (C++ member), 633

esp_ble_mesh_light_lightness_state_t::lightness_max (C++ member), 634
esp_ble_mesh_light_lightness_state_t::lightness_min (C++ member), 633
esp_ble_mesh_light_lightness_state_t::status_code (C++ member), 633
esp_ble_mesh_light_lightness_state_t::target_lightness (C++ member), 633
esp_ble_mesh_light_lightness_state_t::tid (C++ member), 633
esp_ble_mesh_light_lightness_status_cb_t (C++ struct), 625
esp_ble_mesh_light_lightness_status_cb_t::lightness (C++ member), 625
esp_ble_mesh_light_lightness_status_cb_t::remain_time (C++ member), 625
esp_ble_mesh_light_lightness_status_cb_t::target_lightness (C++ member), 625
esp_ble_mesh_light_message_opcode_t (C++ type), 449
esp_ble_mesh_light_xyl_default_set_t (C++ struct), 623
esp_ble_mesh_light_xyl_default_set_t::lightness (C++ member), 623
esp_ble_mesh_light_xyl_default_set_t::xyl_x (C++ member), 623
esp_ble_mesh_light_xyl_default_set_t::xyl_y (C++ member), 623
esp_ble_mesh_light_xyl_default_status_cb_t (C++ struct), 631
esp_ble_mesh_light_xyl_default_status_cb_t::lightness (C++ member), 631
esp_ble_mesh_light_xyl_default_status_cb_t::xyl_x (C++ member), 631
esp_ble_mesh_light_xyl_default_status_cb_t::xyl_y (C++ member), 631
esp_ble_mesh_light_xyl_range_set_t (C++ struct), 623
esp_ble_mesh_light_xyl_range_set_t::xyl_x_range_max (C++ member), 623
esp_ble_mesh_light_xyl_range_set_t::xyl_x_range_min (C++ member), 623
esp_ble_mesh_light_xyl_range_set_t::xyl_y_range_max (C++ member), 624
esp_ble_mesh_light_xyl_range_set_t::xyl_y_range_min (C++ member), 623
esp_ble_mesh_light_xyl_range_status_cb_t (C++ struct), 631
esp_ble_mesh_light_xyl_range_status_cb_t::status_code (C++ member), 631
esp_ble_mesh_light_xyl_range_status_cb_t::xyl_x_range_max (C++ member), 632
esp_ble_mesh_light_xyl_range_status_cb_t::xyl_x_range_min (C++ member), 631
esp_ble_mesh_light_xyl_range_status_cb_t::xyl_y_range_max (C++ member), 632
esp_ble_mesh_light_xyl_range_status_cb_t::xyl_y_range_min (C++ member), 632
esp_ble_mesh_light_xyl_set_t (C++ struct), 622
esp_ble_mesh_light_xyl_set_t::delay (C++ member), 623
esp_ble_mesh_light_xyl_set_t::op_en (C++ member), 622
esp_ble_mesh_light_xyl_set_t::tid (C++ member), 623
esp_ble_mesh_light_xyl_set_t::trans_time (C++ member), 623
esp_ble_mesh_light_xyl_set_t::xyl_lightness (C++ member), 623
esp_ble_mesh_light_xyl_set_t::xyl_x (C++ member), 623
esp_ble_mesh_light_xyl_set_t::xyl_y (C++ member), 623
esp_ble_mesh_light_xyl_setup_srv_t (C++ struct), 641
esp_ble_mesh_light_xyl_setup_srv_t::model (C++ member), 641
esp_ble_mesh_light_xyl_setup_srv_t::rsp_ctrl (C++ member), 641
esp_ble_mesh_light_xyl_setup_srv_t::state (C++ member), 642
esp_ble_mesh_light_xyl_srv_t (C++ struct), 641
esp_ble_mesh_light_xyl_srv_t::last (C++ member), 641
esp_ble_mesh_light_xyl_srv_t::model (C++ member), 641
esp_ble_mesh_light_xyl_srv_t::rsp_ctrl (C++ member), 641
esp_ble_mesh_light_xyl_srv_t::state (C++ member), 641
esp_ble_mesh_light_xyl_srv_t::transition (C++ member), 641
esp_ble_mesh_light_xyl_srv_t::tt_delta_lightness (C++ member), 641
esp_ble_mesh_light_xyl_srv_t::tt_delta_x (C++ member), 641
esp_ble_mesh_light_xyl_srv_t::tt_delta_y (C++ member), 641
esp_ble_mesh_light_xyl_state_t (C++ struct), 640
esp_ble_mesh_light_xyl_state_t::lightness (C++ member), 640
esp_ble_mesh_light_xyl_state_t::lightness_default (C++ member), 640
esp_ble_mesh_light_xyl_state_t::status_code (C++ member), 640
esp_ble_mesh_light_xyl_state_t::target_lightness (C++ member), 640
esp_ble_mesh_light_xyl_state_t::target_x (C++ member), 640
esp_ble_mesh_light_xyl_state_t::target_y (C++ member), 640

esp_ble_mesh_light_xyl_state_t::x (C++ member), 640
esp_ble_mesh_light_xyl_state_t::x_default (C++ member), 640
esp_ble_mesh_light_xyl_state_t::x_range (C++ member), 640
esp_ble_mesh_light_xyl_state_t::x_range::max (C++ member), 640
esp_ble_mesh_light_xyl_state_t::x_range::min (C++ member), 640
esp_ble_mesh_light_xyl_state_t::y (C++ member), 640
esp_ble_mesh_light_xyl_state_t::y_default (C++ member), 640
esp_ble_mesh_light_xyl_state_t::y_range (C++ member), 641
esp_ble_mesh_light_xyl_state_t::y_range::max (C++ member), 641
esp_ble_mesh_light_xyl_state_t::y_range::min (C++ member), 641
esp_ble_mesh_light_xyl_status_cb_t (C++ struct), 630
esp_ble_mesh_light_xyl_status_cb_t::op_en (C++ member), 630
esp_ble_mesh_light_xyl_status_cb_t::remain_time (C++ member), 630
esp_ble_mesh_light_xyl_status_cb_t::xyl_lightness (C++ member), 630
esp_ble_mesh_light_xyl_status_cb_t::xyl_x (C++ member), 630
esp_ble_mesh_light_xyl_status_cb_t::xyl_y (C++ member), 630
esp_ble_mesh_light_xyl_target_status_cb (C++ struct), 631
esp_ble_mesh_light_xyl_target_status_cb::lightness (C++ member), 631
esp_ble_mesh_light_xyl_target_status_cb::remain_time (C++ member), 631
esp_ble_mesh_light_xyl_target_status_cb::target_xyl_lightness (C++ member), 631
esp_ble_mesh_light_xyl_target_status_cb::target_xyl_x (C++ member), 631
esp_ble_mesh_light_xyl_target_status_cb::target_xyl_y (C++ member), 631
esp_ble_mesh_lighting_server_cb_event_t (C++ enum), 665
esp_ble_mesh_lighting_server_cb_event_t::ESP_BLE_MESH_LIGHTING_SERVER_RECV_SET_MSG_EVT (C++ enumerator), 665
esp_ble_mesh_lighting_server_cb_event_t::ESP_BLE_MESH_LIGHTING_SERVER_RECV_GET_MSG_EVT (C++ enumerator), 665
esp_ble_mesh_lighting_server_cb_event_t::ESP_BLE_MESH_LIGHTING_SERVER_RECV_STATUS_MSG_EVT (C++ enumerator), 665
esp_ble_mesh_lighting_server_cb_event_t::ESP_BLE_MESH_LIGHTING_SERVER_STATE_CHANGE_EVT (C++ enumerator), 665
esp_ble_mesh_lighting_server_cb_param_t (C++ struct), 659
esp_ble_mesh_lighting_server_cb_param_t::ctx (C++ member), 659
esp_ble_mesh_lighting_server_cb_param_t::model (C++ member), 659
esp_ble_mesh_lighting_server_cb_param_t::value (C++ member), 659
esp_ble_mesh_lighting_server_cb_t (C++ type), 664
esp_ble_mesh_lighting_server_cb_value_t (C++ union), 617
esp_ble_mesh_lighting_server_cb_value_t::get (C++ member), 617
esp_ble_mesh_lighting_server_cb_value_t::set (C++ member), 617
esp_ble_mesh_lighting_server_cb_value_t::state_change (C++ member), 617
esp_ble_mesh_lighting_server_cb_value_t::status (C++ member), 617
esp_ble_mesh_lighting_server_recv_get_msg_t (C++ union), 615
esp_ble_mesh_lighting_server_recv_get_msg_t::lc_property (C++ member), 615
esp_ble_mesh_lighting_server_recv_set_msg_t (C++ union), 615
esp_ble_mesh_lighting_server_recv_set_msg_t::ctl (C++ member), 616
esp_ble_mesh_lighting_server_recv_set_msg_t::ctl_lightness (C++ member), 616
esp_ble_mesh_lighting_server_recv_set_msg_t::ctl_temperature (C++ member), 616
esp_ble_mesh_lighting_server_recv_set_msg_t::ctl_uv (C++ member), 616
esp_ble_mesh_lighting_server_recv_set_msg_t::hsl (C++ member), 616
esp_ble_mesh_lighting_server_recv_set_msg_t::hsl_hue (C++ member), 616
esp_ble_mesh_lighting_server_recv_set_msg_t::hsl_saturation (C++ member), 616
esp_ble_mesh_lighting_server_recv_set_msg_t::hsl_target_lightness (C++ member), 616
esp_ble_mesh_lighting_server_recv_set_msg_t::hsl_target_hue (C++ member), 616
esp_ble_mesh_lighting_server_recv_set_msg_t::lc_light_onoff (C++ member), 617
esp_ble_mesh_lighting_server_recv_set_msg_t::lc_mode (C++ member), 616
esp_ble_mesh_lighting_server_recv_set_msg_t::lc_occupancy (C++ member), 617
esp_ble_mesh_lighting_server_recv_set_msg_t::light (C++ member), 616
esp_ble_mesh_lighting_server_recv_set_msg_t::xyl (C++ member), 616
esp_ble_mesh_lighting_server_recv_set_msg_t::xyl_x (C++ member), 616

esp_ble_mesh_lighting_server_recv_set_msg_t::xyL_range_set (C++ member), 616
esp_ble_mesh_lighting_server_recv_status_msg_t (C++ union), 617
esp_ble_mesh_lighting_server_recv_status_msg_t::xyl_status (C++ member), 617
esp_ble_mesh_lighting_server_state_change_t (C++ union), 614
esp_ble_mesh_lighting_server_state_change_t::ctl_default_set (C++ member), 614
esp_ble_mesh_lighting_server_state_change_t::ctl_range_set (C++ member), 614
esp_ble_mesh_lighting_server_state_change_t::ctl_temp_set (C++ member), 614
esp_ble_mesh_lighting_server_state_change_t::hsl_default_set (C++ member), 615
esp_ble_mesh_lighting_server_state_change_t::hsl_hue_set (C++ member), 615
esp_ble_mesh_lighting_server_state_change_t::hsl_range_set (C++ member), 615
esp_ble_mesh_lighting_server_state_change_t::hsl_saturation_set (C++ member), 615
esp_ble_mesh_lighting_server_state_change_t::hsl_set (C++ member), 614
esp_ble_mesh_lighting_server_state_change_t::light_onoff_set (C++ member), 615
esp_ble_mesh_lighting_server_state_change_t::lightness_set (C++ member), 615
esp_ble_mesh_lighting_server_state_change_t::lightness_setup (C++ member), 615
esp_ble_mesh_lighting_server_state_change_t::xyl_default_set (C++ member), 615
esp_ble_mesh_lighting_server_state_change_t::xyl_range_set (C++ member), 615
esp_ble_mesh_lighting_server_state_change_t::xyl_set (C++ member), 615
esp_ble_mesh_lpn_disable (C++ function), 463
esp_ble_mesh_lpn_enable (C++ function), 463
esp_ble_mesh_lpn_poll (C++ function), 463
ESP_BLE_MESH_MECHANISM_JAMMED_ERROR (C macro), 520
ESP_BLE_MESH_MECHANISM_JAMMED_WARNING (C macro), 520
ESP_BLE_MESH_MEMORY_ERROR (C macro), 519
ESP_BLE_MESH_MEMORY_WARNING (C macro), 519
ESP_BLE_MESH_MIC_LONG (C macro), 425
ESP_BLE_MESH_MIC_SHORT (C macro), 425
esp_ble_mesh_model (C++ struct), 417
esp_ble_mesh_model::cb (C++ member), 418
esp_ble_mesh_model::company_id (C++ member), 417
esp_ble_mesh_model::element (C++ member), 418
esp_ble_mesh_model::element_idx (C++ member), 417
esp_ble_mesh_model::flags (C++ member), 417
esp_ble_mesh_model::groups (C++ member), 418
esp_ble_mesh_model::keys (C++ member), 418
esp_ble_mesh_model::model_id (C++ member), 417
esp_ble_mesh_model::model_idx (C++ member), 417
esp_ble_mesh_model::op (C++ member), 418
esp_ble_mesh_model::pub (C++ member), 418
esp_ble_mesh_model::user_data (C++ member), 418
esp_ble_mesh_model::vnd (C++ member), 417
esp_ble_mesh_model::[anonymous] (C++ member), 417
esp_ble_mesh_model_cb_event_t (C++ enum), 459
esp_ble_mesh_model_cb_event_t::ESP_BLE_MESH_CLIENT_MODEL_SET_PUBLICATION_COMP_EVT (C++ enumerator), 459
esp_ble_mesh_model_cb_event_t::ESP_BLE_MESH_CLIENT_MODEL_SUBSCRIBE_ADDR_COMP_EVT (C++ enumerator), 459
esp_ble_mesh_model_cb_event_t::ESP_BLE_MESH_MODEL_PUBLISH_COMP_EVT (C++ enumerator), 459
esp_ble_mesh_model_cb_event_t::ESP_BLE_MESH_MODEL_SET_ADDR_COMP_EVT (C++ enumerator), 459
esp_ble_mesh_model_cb_event_t::ESP_BLE_MESH_MODEL_SET_APP_COMP_EVT (C++ enumerator), 459
esp_ble_mesh_model_cb_event_t::ESP_BLE_MESH_MODEL_SET_PUB_PERIOD_COMP_EVT (C++ enumerator), 459
esp_ble_mesh_model_cb_event_t::ESP_BLE_MESH_MODEL_SET_RETRANSMIT_COMP_EVT (C++ enumerator), 459
esp_ble_mesh_model_cb_event_t::ESP_BLE_MESH_MODEL_SUBSCRIBE_ADDR_COMP_EVT (C++ enumerator), 459
esp_ble_mesh_model_cb_event_t::ESP_BLE_MESH_MODEL_UNSUBSCRIBE_ADDR_COMP_EVT (C++ enumerator), 459
esp_ble_mesh_model_cb_event_t::ESP_BLE_MESH_SERVER_MODEL_UPDATE_STATE_COMP_EVT (C++ enumerator), 459
esp_ble_mesh_model_cb_param_t (C++ union), 412
esp_ble_mesh_model_cb_param_t::ble_mesh_client_model_cb_param_t::[anonymous] (C++ struct), 412
esp_ble_mesh_model_cb_param_t::ble_mesh_client_model_cb_param_t::[anonymous] (C++ member), 413
esp_ble_mesh_model_cb_param_t::ble_mesh_client_model_cb_param_t::error_code (C++ member), 412
esp_ble_mesh_model_cb_param_t::ble_mesh_client_model_cb_param_t::model (C++ member), 412

esp_ble_mesh_model_cb_param_t::ble_mesh_model_publish_comp (C++ struct), 413
esp_ble_mesh_model_cb_param_t::ble_mesh_model_publish_comp (C++ member), 412
esp_ble_mesh_model_cb_param_t::ble_mesh_model_publish_upda (C++ member), 413
esp_ble_mesh_model_cb_param_t::ble_mesh_model_publish_upda::model (C++ member), 412
esp_ble_mesh_model_cb_param_t::ble_mesh_model_send_comp (C++ member), 413
esp_ble_mesh_model_cb_param_t::ble_mesh_model_send_comp::model (C++ member), 412
esp_ble_mesh_model_cb_param_t::ble_mesh_model_update_comp (C++ member), 413
esp_ble_mesh_model_cb_param_t::ble_mesh_model_update_comp::model (C++ member), 412
esp_ble_mesh_model_cb_param_t::ble_mesh_server_model_updat (C++ member), 413
esp_ble_mesh_model_cb_param_t::ble_mesh_server_model_updat::model (C++ member), 412
esp_ble_mesh_model_cb_param_t::ble_mesh_set_heartbeat_filter_type (C++ member), 413
esp_ble_mesh_model_cb_param_t::client_recv_publish_msg (C++ member), 412
esp_ble_mesh_model_cb_param_t::client_send_timeout (C++ member), 412
esp_ble_mesh_model_cb_param_t::model_operation (C++ member), 412
esp_ble_mesh_model_cb_param_t::model_operation::model (C++ member), 412
esp_ble_mesh_model_cb_param_t::model_operation::opcode (C++ member), 412
esp_ble_mesh_model_cb_param_t::model_operation::params (C++ member), 412
esp_ble_mesh_model_cb_param_t::model_publish_comp (C++ member), 412
esp_ble_mesh_model_cb_param_t::model_publish_update (C++ member), 412
esp_ble_mesh_model_cb_param_t::model_send_comp (C++ member), 412
esp_ble_mesh_model_cb_param_t::model_update_comp (C++ member), 412
esp_ble_mesh_model_cb_param_t::server_model_update (C++ member), 412
esp_ble_mesh_model_cb_t (C++ type), 471
esp_ble_mesh_model_cbs_t (C++ struct), 417
esp_ble_mesh_model_cbs_t::publish_update (C++ member), 417
ESP_BLE_MESH_MODEL_CFG_CLI_PARAM (C macro), 509
ESP_BLE_MESH_MODEL_CFG_SRV (C macro), 508
ESP_BLE_MESH_MODEL_GEN_ADMIN_PROP_SRV (C macro), 559
ESP_BLE_MESH_MODEL_GEN_BATTERY_CLI (C macro), 555
ESP_BLE_MESH_MODEL_GEN_BATTERY_SRV (C macro), 558
ESP_BLE_MESH_MODEL_GEN_CLIENT_PROP_SRV (C macro), 559
ESP_BLE_MESH_MODEL_GEN_DEF_TRANS_TIME_CLI (C macro), 555
ESP_BLE_MESH_MODEL_GEN_DEF_TRANS_TIME_SRV (C macro), 556
ESP_BLE_MESH_MODEL_GEN_LEVEL_CLI (C macro), 554
ESP_BLE_MESH_MODEL_GEN_LEVEL_SRV (C macro), 556
ESP_BLE_MESH_MODEL_GEN_LOCATION_CLI (C macro), 556
ESP_BLE_MESH_MODEL_GEN_LOCATION_SETUP_SRV (C macro), 558
ESP_BLE_MESH_MODEL_GEN_LOCATION_SRV (C macro), 558
ESP_BLE_MESH_MODEL_GEN_MANUFACTURER_PROP_SRV (C macro), 559
ESP_BLE_MESH_MODEL_GEN_ONOFF_CLI (C macro), 554
ESP_BLE_MESH_MODEL_GEN_ONOFF_SRV (C macro), 556
ESP_BLE_MESH_MODEL_GEN_POWER_LEVEL_CLI (C macro), 555
ESP_BLE_MESH_MODEL_GEN_POWER_LEVEL_SETUP_SRV (C macro), 557
ESP_BLE_MESH_MODEL_GEN_POWER_LEVEL_SRV (C macro), 557
ESP_BLE_MESH_MODEL_GEN_POWER_ONOFF_CLI (C macro), 555
ESP_BLE_MESH_MODEL_GEN_POWER_ONOFF_SETUP_SRV (C macro), 557
ESP_BLE_MESH_MODEL_GEN_POWER_ONOFF_SRV (C macro), 557
ESP_BLE_MESH_MODEL_GEN_PROPERTY_CLI (C macro), 556
ESP_BLE_MESH_MODEL_GEN_USER_PROP_SRV (C macro), 558

ESP_BLE_MESH_MODEL_HEALTH_CLI (*C macro*), 517
ESP_BLE_MESH_MODEL_HEALTH_SRV (*C macro*), 517
ESP_BLE_MESH_MODEL_ID_CONFIG_CLI (*C macro*), 430
ESP_BLE_MESH_MODEL_ID_CONFIG_SRV (*C macro*), 430
ESP_BLE_MESH_MODEL_ID_GEN_ADMIN_PROP_SRV (*C macro*), 431
ESP_BLE_MESH_MODEL_ID_GEN_BATTERY_CLI (*C macro*), 431
ESP_BLE_MESH_MODEL_ID_GEN_BATTERY_SRV (*C macro*), 431
ESP_BLE_MESH_MODEL_ID_GEN_CLIENT_PROP_SRV (*C macro*), 431
ESP_BLE_MESH_MODEL_ID_GEN_DEF_TRANS_TIME_CLI (*C macro*), 431
ESP_BLE_MESH_MODEL_ID_GEN_DEF_TRANS_TIME_SRV (*C macro*), 431
ESP_BLE_MESH_MODEL_ID_GEN_LEVEL_CLI (*C macro*), 431
ESP_BLE_MESH_MODEL_ID_GEN_LEVEL_SRV (*C macro*), 431
ESP_BLE_MESH_MODEL_ID_GEN_LOCATION_CLI (*C macro*), 431
ESP_BLE_MESH_MODEL_ID_GEN_LOCATION_SETUP_SRV (*C macro*), 431
ESP_BLE_MESH_MODEL_ID_GEN_LOCATION_SRV (*C macro*), 431
ESP_BLE_MESH_MODEL_ID_GEN_MANUFACTURER_PROP_SRV (*C macro*), 431
ESP_BLE_MESH_MODEL_ID_GEN_ONOFF_CLI (*C macro*), 431
ESP_BLE_MESH_MODEL_ID_GEN_ONOFF_SRV (*C macro*), 431
ESP_BLE_MESH_MODEL_ID_GEN_POWER_LEVEL_CLI (*C macro*), 431
ESP_BLE_MESH_MODEL_ID_GEN_POWER_LEVEL_SETUP_SRV (*C macro*), 431
ESP_BLE_MESH_MODEL_ID_GEN_POWER_LEVEL_SRV (*C macro*), 431
ESP_BLE_MESH_MODEL_ID_GEN_POWER_ONOFF_CLI (*C macro*), 431
ESP_BLE_MESH_MODEL_ID_GEN_POWER_ONOFF_SETUP_SRV (*C macro*), 431
ESP_BLE_MESH_MODEL_ID_GEN_POWER_ONOFF_SRV (*C macro*), 431
ESP_BLE_MESH_MODEL_ID_GEN_PROP_CLI (*C macro*), 432
ESP_BLE_MESH_MODEL_ID_GEN_USER_PROP_SRV (*C macro*), 431
ESP_BLE_MESH_MODEL_ID_HEALTH_CLI (*C macro*), 431
ESP_BLE_MESH_MODEL_ID_HEALTH_SRV (*C macro*), 430
ESP_BLE_MESH_MODEL_ID_LIGHT_CTL_CLI (*C macro*), 432
ESP_BLE_MESH_MODEL_ID_LIGHT_CTL_SETUP_SRV (*C macro*), 432
ESP_BLE_MESH_MODEL_ID_LIGHT_CTL_SRV (*C macro*), 432
ESP_BLE_MESH_MODEL_ID_LIGHT_CTL_TEMP_SRV (*C macro*), 432
ESP_BLE_MESH_MODEL_ID_LIGHT_HSL_CLI (*C macro*), 432
ESP_BLE_MESH_MODEL_ID_LIGHT_HSL_HUE_SRV (*C macro*), 433
ESP_BLE_MESH_MODEL_ID_LIGHT_HSL_SAT_SRV (*C macro*), 433
ESP_BLE_MESH_MODEL_ID_LIGHT_HSL_SETUP_SRV (*C macro*), 432
ESP_BLE_MESH_MODEL_ID_LIGHT_HSL_SRV (*C macro*), 432
ESP_BLE_MESH_MODEL_ID_LIGHT_LC_CLI (*C macro*), 433
ESP_BLE_MESH_MODEL_ID_LIGHT_LC_SETUP_SRV (*C macro*), 433
ESP_BLE_MESH_MODEL_ID_LIGHT_LC_SRV (*C macro*), 433
ESP_BLE_MESH_MODEL_ID_LIGHT_LIGHTNESS_CLI (*C macro*), 432
ESP_BLE_MESH_MODEL_ID_LIGHT_LIGHTNESS_SETUP_SRV (*C macro*), 432
ESP_BLE_MESH_MODEL_ID_LIGHT_LIGHTNESS_SRV (*C macro*), 432
ESP_BLE_MESH_MODEL_ID_LIGHT_XYL_CLI (*C macro*), 433
ESP_BLE_MESH_MODEL_ID_LIGHT_XYL_SETUP_SRV (*C macro*), 433
ESP_BLE_MESH_MODEL_ID_LIGHT_XYL_SRV (*C macro*), 433
ESP_BLE_MESH_MODEL_ID_SCENE_CLI (*C macro*), 432
ESP_BLE_MESH_MODEL_ID_SCENE_SETUP_SRV (*C macro*), 432
ESP_BLE_MESH_MODEL_ID_SCENE_SRV (*C macro*), 432
ESP_BLE_MESH_MODEL_ID_SCHEDULER_CLI (*C macro*), 432
ESP_BLE_MESH_MODEL_ID_SCHEDULER_SETUP_SRV (*C macro*), 432
ESP_BLE_MESH_MODEL_ID_SCHEDULER_SRV (*C macro*), 432
ESP_BLE_MESH_MODEL_ID_SENSOR_CLI (*C macro*), 432
ESP_BLE_MESH_MODEL_ID_SENSOR_SETUP_SRV (*C macro*), 432
ESP_BLE_MESH_MODEL_ID_SENSOR_SRV (*C macro*), 432
ESP_BLE_MESH_MODEL_ID_TIME_CLI (*C macro*), 432
ESP_BLE_MESH_MODEL_ID_TIME_SETUP_SRV (*C macro*), 432
ESP_BLE_MESH_MODEL_ID_TIME_SRV (*C macro*), 432

ESP_BLE_MESH_MODEL_LIGHT_CTL_CLI (*C macro*), 659
ESP_BLE_MESH_MODEL_LIGHT_CTL_SETUP_SRV (*C macro*), 661
ESP_BLE_MESH_MODEL_LIGHT_CTL_SRV (*C macro*), 661
ESP_BLE_MESH_MODEL_LIGHT_CTL_TEMP_SRV (*C macro*), 661
ESP_BLE_MESH_MODEL_LIGHT_HSL_CLI (*C macro*), 660
ESP_BLE_MESH_MODEL_LIGHT_HSL_HUE_SRV (*C macro*), 662
ESP_BLE_MESH_MODEL_LIGHT_HSL_SAT_SRV (*C macro*), 662
ESP_BLE_MESH_MODEL_LIGHT_HSL_SETUP_SRV (*C macro*), 662
ESP_BLE_MESH_MODEL_LIGHT_HSL_SRV (*C macro*), 662
ESP_BLE_MESH_MODEL_LIGHT_LC_CLI (*C macro*), 660
ESP_BLE_MESH_MODEL_LIGHT_LC_SETUP_SRV (*C macro*), 664
ESP_BLE_MESH_MODEL_LIGHT_LC_SRV (*C macro*), 663
ESP_BLE_MESH_MODEL_LIGHT_LIGHTNESS_CLI (*C macro*), 659
ESP_BLE_MESH_MODEL_LIGHT_LIGHTNESS_SETUP_SRV (*C macro*), 661
ESP_BLE_MESH_MODEL_LIGHT_LIGHTNESS_SRV (*C macro*), 660
ESP_BLE_MESH_MODEL_LIGHT_XYL_CLI (*C macro*), 660
ESP_BLE_MESH_MODEL_LIGHT_XYL_SETUP_SRV (*C macro*), 663
ESP_BLE_MESH_MODEL_LIGHT_XYL_SRV (*C macro*), 663
esp_ble_mesh_model_msg_opcode_init (*C++ function*), 464
ESP_BLE_MESH_MODEL_NONE (*C macro*), 430
ESP_BLE_MESH_MODEL_OP (*C macro*), 429
ESP_BLE_MESH_MODEL_OP_1 (*C macro*), 429
ESP_BLE_MESH_MODEL_OP_2 (*C macro*), 429
ESP_BLE_MESH_MODEL_OP_3 (*C macro*), 429
ESP_BLE_MESH_MODEL_OP_APP_KEY_ADD (*C macro*), 435
ESP_BLE_MESH_MODEL_OP_APP_KEY_DELETE (*C macro*), 435
ESP_BLE_MESH_MODEL_OP_APP_KEY_GET (*C macro*), 433
ESP_BLE_MESH_MODEL_OP_APP_KEY_LIST (*C macro*), 436
ESP_BLE_MESH_MODEL_OP_APP_KEY_STATUS (*C macro*), 436
ESP_BLE_MESH_MODEL_OP_APP_KEY_UPDATE (*C macro*), 435
ESP_BLE_MESH_MODEL_OP_ATTENTION_GET (*C macro*), 438
ESP_BLE_MESH_MODEL_OP_ATTENTION_SET (*C macro*), 438
ESP_BLE_MESH_MODEL_OP_ATTENTION_SET_UNACK (*C macro*), 438
ESP_BLE_MESH_MODEL_OP_ATTENTION_STATUS (*C macro*), 438
ESP_BLE_MESH_MODEL_OP_BEACON_GET (*C macro*), 433
ESP_BLE_MESH_MODEL_OP_BEACON_SET (*C macro*), 434
ESP_BLE_MESH_MODEL_OP_BEACON_STATUS (*C macro*), 436
ESP_BLE_MESH_MODEL_OP_COMPOSITION_DATA_GET (*C macro*), 433
ESP_BLE_MESH_MODEL_OP_COMPOSITION_DATA_STATUS (*C macro*), 436
ESP_BLE_MESH_MODEL_OP_DEFAULT_TTL_GET (*C macro*), 433
ESP_BLE_MESH_MODEL_OP_DEFAULT_TTL_SET (*C macro*), 434
ESP_BLE_MESH_MODEL_OP_DEFAULT_TTL_STATUS (*C macro*), 436
ESP_BLE_MESH_MODEL_OP_END (*C macro*), 430
ESP_BLE_MESH_MODEL_OP_FRIEND_GET (*C macro*), 433
ESP_BLE_MESH_MODEL_OP_FRIEND_SET (*C macro*), 435
ESP_BLE_MESH_MODEL_OP_FRIEND_STATUS (*C macro*), 437
ESP_BLE_MESH_MODEL_OP_GATT_PROXY_GET (*C macro*), 433
ESP_BLE_MESH_MODEL_OP_GATT_PROXY_SET (*C macro*), 434
ESP_BLE_MESH_MODEL_OP_GATT_PROXY_STATUS (*C macro*), 436
ESP_BLE_MESH_MODEL_OP_GEN_ADMIN_PROPERTIES_GET (*C macro*), 441
ESP_BLE_MESH_MODEL_OP_GEN_ADMIN_PROPERTIES_STATUS (*C macro*), 441
ESP_BLE_MESH_MODEL_OP_GEN_ADMIN_PROPERTY_GET (*C macro*), 441
ESP_BLE_MESH_MODEL_OP_GEN_ADMIN_PROPERTY_SET (*C macro*), 441
ESP_BLE_MESH_MODEL_OP_GEN_ADMIN_PROPERTY_SET_UNAC (*C macro*), 441
ESP_BLE_MESH_MODEL_OP_GEN_ADMIN_PROPERTY_STATUS (*C macro*), 441
ESP_BLE_MESH_MODEL_OP_GEN_BATTERY_GET (*C macro*), 440
ESP_BLE_MESH_MODEL_OP_GEN_BATTERY_STATUS (*C macro*), 440
ESP_BLE_MESH_MODEL_OP_GEN_CLIENT_PROPERTIES_GET (*C macro*), 441
ESP_BLE_MESH_MODEL_OP_GEN_CLIENT_PROPERTIES_STATU (*C macro*), 441
ESP_BLE_MESH_MODEL_OP_GEN_DEF_TRANS_TIME_GET (*C macro*), 439
ESP_BLE_MESH_MODEL_OP_GEN_DEF_TRANS_TIME_SET (*C macro*), 439

ESP_BLE_MESH_MODEL_OP_GEN_DEF_TRANS_TIME_GET (*C macro*), 439
ESP_BLE_MESH_MODEL_OP_GEN_DEF_TRANS_TIME_SET (*C macro*), 439
ESP_BLE_MESH_MODEL_OP_GEN_DEF_TRANS_TIME_SET_UNACK (*C macro*), 439
ESP_BLE_MESH_MODEL_OP_GEN_DEF_TRANS_TIME_STATUS (*C macro*), 439
ESP_BLE_MESH_MODEL_OP_GEN_DELTA_SET (*C macro*), 439
ESP_BLE_MESH_MODEL_OP_GEN_DELTA_SET_UNACK (*C macro*), 439
ESP_BLE_MESH_MODEL_OP_GEN_LEVEL_GET (*C macro*), 439
ESP_BLE_MESH_MODEL_OP_GEN_LEVEL_SET (*C macro*), 439
ESP_BLE_MESH_MODEL_OP_GEN_LEVEL_SET_UNACK (*C macro*), 439
ESP_BLE_MESH_MODEL_OP_GEN_LEVEL_STATUS (*C macro*), 439
ESP_BLE_MESH_MODEL_OP_GEN_LOC_GLOBAL_GET (*C macro*), 440
ESP_BLE_MESH_MODEL_OP_GEN_LOC_GLOBAL_SET (*C macro*), 440
ESP_BLE_MESH_MODEL_OP_GEN_LOC_GLOBAL_SET_UNACK (*C macro*), 440
ESP_BLE_MESH_MODEL_OP_GEN_LOC_GLOBAL_STATUS (*C macro*), 440
ESP_BLE_MESH_MODEL_OP_GEN_LOC_LOCAL_GET (*C macro*), 440
ESP_BLE_MESH_MODEL_OP_GEN_LOC_LOCAL_SET (*C macro*), 440
ESP_BLE_MESH_MODEL_OP_GEN_LOC_LOCAL_SET_UNACK (*C macro*), 441
ESP_BLE_MESH_MODEL_OP_GEN_LOC_LOCAL_STATUS (*C macro*), 440
ESP_BLE_MESH_MODEL_OP_GEN_MANUFACTURER_PROPERTIES_GET (*C macro*), 441
ESP_BLE_MESH_MODEL_OP_GEN_MANUFACTURER_PROPERTIES_STATUS (*C macro*), 441
ESP_BLE_MESH_MODEL_OP_GEN_MANUFACTURER_PROPERTY_GET (*C macro*), 441
ESP_BLE_MESH_MODEL_OP_GEN_MANUFACTURER_PROPERTY_SET (*C macro*), 441
ESP_BLE_MESH_MODEL_OP_GEN_MANUFACTURER_PROPERTY_SET_UNACK (*C macro*), 441
ESP_BLE_MESH_MODEL_OP_GEN_MOVE_SET (*C macro*), 439
ESP_BLE_MESH_MODEL_OP_GEN_MOVE_SET_UNACK (*C macro*), 439
ESP_BLE_MESH_MODEL_OP_GEN_ONOFF_GET (*C macro*), 438
ESP_BLE_MESH_MODEL_OP_GEN_ONOFF_SET (*C macro*), 439
ESP_BLE_MESH_MODEL_OP_GEN_ONOFF_SET_UNACK (*C macro*), 439
ESP_BLE_MESH_MODEL_OP_GEN_ONOFF_STATUS (*C macro*), 439
ESP_BLE_MESH_MODEL_OP_GEN_ONPOWERUP_GET (*C macro*), 439
ESP_BLE_MESH_MODEL_OP_GEN_ONPOWERUP_SET (*C macro*), 439
ESP_BLE_MESH_MODEL_OP_GEN_ONPOWERUP_SET_UNACK (*C macro*), 439
ESP_BLE_MESH_MODEL_OP_GEN_ONPOWERUP_STATUS (*C macro*), 439
ESP_BLE_MESH_MODEL_OP_GEN_POWER_DEFAULT_GET (*C macro*), 440
ESP_BLE_MESH_MODEL_OP_GEN_POWER_DEFAULT_SET (*C macro*), 440
ESP_BLE_MESH_MODEL_OP_GEN_POWER_DEFAULT_SET_UNACK (*C macro*), 440
ESP_BLE_MESH_MODEL_OP_GEN_POWER_DEFAULT_STATUS (*C macro*), 440
ESP_BLE_MESH_MODEL_OP_GEN_POWER_LAST_GET (*C macro*), 440
ESP_BLE_MESH_MODEL_OP_GEN_POWER_LAST_STATUS (*C macro*), 440
ESP_BLE_MESH_MODEL_OP_GEN_POWER_LEVEL_GET (*C macro*), 439
ESP_BLE_MESH_MODEL_OP_GEN_POWER_LEVEL_SET (*C macro*), 439
ESP_BLE_MESH_MODEL_OP_GEN_POWER_LEVEL_SET_UNACK (*C macro*), 440
ESP_BLE_MESH_MODEL_OP_GEN_POWER_LEVEL_STATUS (*C macro*), 440
ESP_BLE_MESH_MODEL_OP_GEN_POWER_RANGE_GET (*C macro*), 440
ESP_BLE_MESH_MODEL_OP_GEN_POWER_RANGE_SET (*C macro*), 440
ESP_BLE_MESH_MODEL_OP_GEN_POWER_RANGE_SET_UNACK (*C macro*), 440
ESP_BLE_MESH_MODEL_OP_GEN_POWER_RANGE_STATUS (*C macro*), 440
ESP_BLE_MESH_MODEL_OP_GEN_USER_PROPERTIES_GET (*C macro*), 441
ESP_BLE_MESH_MODEL_OP_GEN_USER_PROPERTIES_STATUS (*C macro*), 441
ESP_BLE_MESH_MODEL_OP_GEN_USER_PROPERTY_GET (*C macro*), 441
ESP_BLE_MESH_MODEL_OP_GEN_USER_PROPERTY_SET (*C macro*), 441
ESP_BLE_MESH_MODEL_OP_GEN_USER_PROPERTY_SET_UNACK (*C macro*), 441
ESP_BLE_MESH_MODEL_OP_GEN_USER_PROPERTY_STATUS (*C macro*), 441
ESP_BLE_MESH_MODEL_OP_HEALTH_CURRENT_STATUS (*C macro*), 438
ESP_BLE_MESH_MODEL_OP_HEALTH_FAULT_CLEAR (*C macro*), 438
ESP_BLE_MESH_MODEL_OP_HEALTH_FAULT_CLEAR_UNACK (*C macro*), 438
ESP_BLE_MESH_MODEL_OP_HEALTH_FAULT_GET (*C macro*), 438
ESP_BLE_MESH_MODEL_OP_HEALTH_FAULT_STATUS (*C macro*), 438
ESP_BLE_MESH_MODEL_OP_HEALTH_FAULT_TEST (*C macro*), 438

ESP_BLE_MESH_MODEL_OP_HEALTH_FAULT_TEST_UNACK (*C macro*), 438
ESP_BLE_MESH_MODEL_OP_HEALTH_PERIOD_GET (*C macro*), 438
ESP_BLE_MESH_MODEL_OP_HEALTH_PERIOD_SET (*C macro*), 438
ESP_BLE_MESH_MODEL_OP_HEALTH_PERIOD_SET_UNACK (*C macro*), 438
ESP_BLE_MESH_MODEL_OP_HEALTH_PERIOD_STATUS (*C macro*), 438
ESP_BLE_MESH_MODEL_OP_HEARTBEAT_PUB_GET (*C macro*), 433
ESP_BLE_MESH_MODEL_OP_HEARTBEAT_PUB_SET (*C macro*), 435
ESP_BLE_MESH_MODEL_OP_HEARTBEAT_PUB_STATUS (*C macro*), 437
ESP_BLE_MESH_MODEL_OP_HEARTBEAT_SUB_GET (*C macro*), 433
ESP_BLE_MESH_MODEL_OP_HEARTBEAT_SUB_SET (*C macro*), 435
ESP_BLE_MESH_MODEL_OP_HEARTBEAT_SUB_STATUS (*C macro*), 437
ESP_BLE_MESH_MODEL_OP_KEY_REFRESH_PHASE_GET (*C macro*), 434
ESP_BLE_MESH_MODEL_OP_KEY_REFRESH_PHASE_SET (*C macro*), 435
ESP_BLE_MESH_MODEL_OP_KEY_REFRESH_PHASE_STATUS (*C macro*), 437
ESP_BLE_MESH_MODEL_OP_LIGHT_CTL_DEFAULT_GET (*C macro*), 445
ESP_BLE_MESH_MODEL_OP_LIGHT_CTL_DEFAULT_SET (*C macro*), 445
ESP_BLE_MESH_MODEL_OP_LIGHT_CTL_DEFAULT_SET_UNACK (*C macro*), 445
ESP_BLE_MESH_MODEL_OP_LIGHT_CTL_DEFAULT_STATUS (*C macro*), 445
ESP_BLE_MESH_MODEL_OP_LIGHT_CTL_GET (*C macro*), 444
ESP_BLE_MESH_MODEL_OP_LIGHT_CTL_SET (*C macro*), 444
ESP_BLE_MESH_MODEL_OP_LIGHT_CTL_SET_UNACK (*C macro*), 445
ESP_BLE_MESH_MODEL_OP_LIGHT_CTL_STATUS (*C macro*), 445
ESP_BLE_MESH_MODEL_OP_LIGHT_CTL_TEMPERATURE_GET (*C macro*), 445
ESP_BLE_MESH_MODEL_OP_LIGHT_CTL_TEMPERATURE_RANGE_GET (*C macro*), 445
ESP_BLE_MESH_MODEL_OP_LIGHT_CTL_TEMPERATURE_RANGE_SET (*C macro*), 445
ESP_BLE_MESH_MODEL_OP_LIGHT_CTL_TEMPERATURE_RANGE_SET_UNACK (*C macro*), 445
ESP_BLE_MESH_MODEL_OP_LIGHT_CTL_TEMPERATURE_RANGE_STATUS (*C macro*), 445
ESP_BLE_MESH_MODEL_OP_LIGHT_CTL_TEMPERATURE_SET (*C macro*), 445
ESP_BLE_MESH_MODEL_OP_LIGHT_CTL_TEMPERATURE_SET_UNACK (*C macro*), 445
ESP_BLE_MESH_MODEL_OP_LIGHT_CTL_TEMPERATURE_STATUS (*C macro*), 445
ESP_BLE_MESH_MODEL_OP_LIGHT_HSL_DEFAULT_GET (*C macro*), 446
ESP_BLE_MESH_MODEL_OP_LIGHT_HSL_DEFAULT_SET (*C macro*), 446
ESP_BLE_MESH_MODEL_OP_LIGHT_HSL_DEFAULT_SET_UNACK (*C macro*), 446
ESP_BLE_MESH_MODEL_OP_LIGHT_HSL_DEFAULT_STATUS (*C macro*), 446
ESP_BLE_MESH_MODEL_OP_LIGHT_HSL_GET (*C macro*), 445
ESP_BLE_MESH_MODEL_OP_LIGHT_HSL_HUE_GET (*C macro*), 445
ESP_BLE_MESH_MODEL_OP_LIGHT_HSL_HUE_SET (*C macro*), 445
ESP_BLE_MESH_MODEL_OP_LIGHT_HSL_HUE_SET_UNACK (*C macro*), 445
ESP_BLE_MESH_MODEL_OP_LIGHT_HSL_HUE_STATUS (*C macro*), 445
ESP_BLE_MESH_MODEL_OP_LIGHT_HSL_RANGE_GET (*C macro*), 446
ESP_BLE_MESH_MODEL_OP_LIGHT_HSL_RANGE_SET (*C macro*), 446
ESP_BLE_MESH_MODEL_OP_LIGHT_HSL_RANGE_SET_UNACK (*C macro*), 446
ESP_BLE_MESH_MODEL_OP_LIGHT_HSL_RANGE_STATUS (*C macro*), 446
ESP_BLE_MESH_MODEL_OP_LIGHT_HSL_SATURATION_GET (*C macro*), 445
ESP_BLE_MESH_MODEL_OP_LIGHT_HSL_SATURATION_SET (*C macro*), 445
ESP_BLE_MESH_MODEL_OP_LIGHT_HSL_SATURATION_SET_UNACK (*C macro*), 445
ESP_BLE_MESH_MODEL_OP_LIGHT_HSL_SATURATION_STATUS (*C macro*), 446
ESP_BLE_MESH_MODEL_OP_LIGHT_HSL_SET (*C macro*), 446
ESP_BLE_MESH_MODEL_OP_LIGHT_HSL_SET_UNACK (*C macro*), 446
ESP_BLE_MESH_MODEL_OP_LIGHT_HSL_STATUS (*C macro*), 446
ESP_BLE_MESH_MODEL_OP_LIGHT_HSL_TARGET_GET (*C macro*), 446
ESP_BLE_MESH_MODEL_OP_LIGHT_HSL_TARGET_STATUS (*C macro*), 446
ESP_BLE_MESH_MODEL_OP_LIGHT_LC_LIGHT_ONOFF_GET (*C macro*), 447
ESP_BLE_MESH_MODEL_OP_LIGHT_LC_LIGHT_ONOFF_SET (*C macro*), 447
ESP_BLE_MESH_MODEL_OP_LIGHT_LC_LIGHT_ONOFF_SET_UNACK (*C macro*), 447
ESP_BLE_MESH_MODEL_OP_LIGHT_LC_LIGHT_ONOFF_STATUS (*C macro*), 447
ESP_BLE_MESH_MODEL_OP_LIGHT_LC_MODE_GET (*C macro*), 447
ESP_BLE_MESH_MODEL_OP_LIGHT_LC_MODE_SET (*C macro*), 447

ESP_BLE_MESH_MODEL_OP_LIGHT_LC_MODE_SET_UNACK (*C macro*), 447
ESP_BLE_MESH_MODEL_OP_LIGHT_LC_MODE_STATUS (*C macro*), 447
ESP_BLE_MESH_MODEL_OP_LIGHT_LC_OM_GET (*C macro*), 447
ESP_BLE_MESH_MODEL_OP_LIGHT_LC_OM_SET (*C macro*), 447
ESP_BLE_MESH_MODEL_OP_LIGHT_LC_OM_SET_UNACK (*C macro*), 447
ESP_BLE_MESH_MODEL_OP_LIGHT_LC_OM_STATUS (*C macro*), 447
ESP_BLE_MESH_MODEL_OP_LIGHT_LC_PROPERTY_GET (*C macro*), 447
ESP_BLE_MESH_MODEL_OP_LIGHT_LC_PROPERTY_SET (*C macro*), 447
ESP_BLE_MESH_MODEL_OP_LIGHT_LC_PROPERTY_SET_UNACK (*C macro*), 447
ESP_BLE_MESH_MODEL_OP_LIGHT_LC_PROPERTY_STATUS (*C macro*), 447
ESP_BLE_MESH_MODEL_OP_LIGHT_LIGHTNESS_DEFAULT_GET (*C macro*), 444
ESP_BLE_MESH_MODEL_OP_LIGHT_LIGHTNESS_DEFAULT_SET (*C macro*), 444
ESP_BLE_MESH_MODEL_OP_LIGHT_LIGHTNESS_DEFAULT_SET_UNACK (*C macro*), 444
ESP_BLE_MESH_MODEL_OP_LIGHT_LIGHTNESS_DEFAULT_STATUS (*C macro*), 444
ESP_BLE_MESH_MODEL_OP_LIGHT_LIGHTNESS_GET (*C macro*), 444
ESP_BLE_MESH_MODEL_OP_LIGHT_LIGHTNESS_LAST_GET (*C macro*), 444
ESP_BLE_MESH_MODEL_OP_LIGHT_LIGHTNESS_LAST_STATUS (*C macro*), 444
ESP_BLE_MESH_MODEL_OP_LIGHT_LIGHTNESS_LINEAR_GET (*C macro*), 444
ESP_BLE_MESH_MODEL_OP_LIGHT_LIGHTNESS_LINEAR_SET (*C macro*), 444
ESP_BLE_MESH_MODEL_OP_LIGHT_LIGHTNESS_LINEAR_SET_UNACK (*C macro*), 444
ESP_BLE_MESH_MODEL_OP_LIGHT_LIGHTNESS_LINEAR_STATUS (*C macro*), 444
ESP_BLE_MESH_MODEL_OP_LIGHT_LIGHTNESS_RANGE_GET (*C macro*), 444
ESP_BLE_MESH_MODEL_OP_LIGHT_LIGHTNESS_RANGE_SET (*C macro*), 444
ESP_BLE_MESH_MODEL_OP_LIGHT_LIGHTNESS_RANGE_SET_UNACK (*C macro*), 444
ESP_BLE_MESH_MODEL_OP_LIGHT_LIGHTNESS_RANGE_STATUS (*C macro*), 444
ESP_BLE_MESH_MODEL_OP_LIGHT_LIGHTNESS_SET (*C macro*), 444
ESP_BLE_MESH_MODEL_OP_LIGHT_LIGHTNESS_SET_UNACK (*C macro*), 444
ESP_BLE_MESH_MODEL_OP_LIGHT_LIGHTNESS_STATUS (*C macro*), 444
ESP_BLE_MESH_MODEL_OP_LIGHT_XYL_DEFAULT_GET (*C macro*), 446
ESP_BLE_MESH_MODEL_OP_LIGHT_XYL_DEFAULT_SET (*C macro*), 447
ESP_BLE_MESH_MODEL_OP_LIGHT_XYL_DEFAULT_SET_UNACK (*C macro*), 447
ESP_BLE_MESH_MODEL_OP_LIGHT_XYL_DEFAULT_STATUS (*C macro*), 446
ESP_BLE_MESH_MODEL_OP_LIGHT_XYL_GET (*C macro*), 446
ESP_BLE_MESH_MODEL_OP_LIGHT_XYL_RANGE_GET (*C macro*), 447
ESP_BLE_MESH_MODEL_OP_LIGHT_XYL_RANGE_SET (*C macro*), 447
ESP_BLE_MESH_MODEL_OP_LIGHT_XYL_RANGE_SET_UNACK (*C macro*), 447
ESP_BLE_MESH_MODEL_OP_LIGHT_XYL_RANGE_STATUS (*C macro*), 447
ESP_BLE_MESH_MODEL_OP_LIGHT_XYL_SET (*C macro*), 446
ESP_BLE_MESH_MODEL_OP_LIGHT_XYL_SET_UNACK (*C macro*), 446
ESP_BLE_MESH_MODEL_OP_LIGHT_XYL_STATUS (*C macro*), 446
ESP_BLE_MESH_MODEL_OP_LIGHT_XYL_TARGET_GET (*C macro*), 446
ESP_BLE_MESH_MODEL_OP_LIGHT_XYL_TARGET_STATUS (*C macro*), 446
ESP_BLE_MESH_MODEL_OP_LPN_POLLTIMEOUT_GET (*C macro*), 434
ESP_BLE_MESH_MODEL_OP_LPN_POLLTIMEOUT_STATUS (*C macro*), 437
ESP_BLE_MESH_MODEL_OP_MODEL_APP_BIND (*C macro*), 435
ESP_BLE_MESH_MODEL_OP_MODEL_APP_STATUS (*C macro*), 436
ESP_BLE_MESH_MODEL_OP_MODEL_APP_UNBIND (*C macro*), 436
ESP_BLE_MESH_MODEL_OP_MODEL_PUB_GET (*C macro*), 433
ESP_BLE_MESH_MODEL_OP_MODEL_PUB_SET (*C macro*), 434
ESP_BLE_MESH_MODEL_OP_MODEL_PUB_STATUS (*C macro*), 436
ESP_BLE_MESH_MODEL_OP_MODEL_PUB_VIRTUAL_ADDR_SET (*C macro*), 436
ESP_BLE_MESH_MODEL_OP_MODEL_SUB_ADD (*C macro*), 434
ESP_BLE_MESH_MODEL_OP_MODEL_SUB_DELETE (*C macro*), 434
ESP_BLE_MESH_MODEL_OP_MODEL_SUB_DELETE_ALL (*C macro*), 436
ESP_BLE_MESH_MODEL_OP_MODEL_SUB_OVERWRITE (*C macro*), 435
ESP_BLE_MESH_MODEL_OP_MODEL_SUB_STATUS (*C macro*), 436
ESP_BLE_MESH_MODEL_OP_MODEL_SUB_VIRTUAL_ADDR_ADD (*C macro*), 434
ESP_BLE_MESH_MODEL_OP_MODEL_SUB_VIRTUAL_ADDR_DELE (*C macro*), 435

ESP_BLE_MESH_MODEL_OP_MODEL_SUB_VIRTUAL_ADDR_OVERWRITE (*C macro*), 435
ESP_BLE_MESH_MODEL_OP_NET_KEY_ADD (*C macro*), 435
ESP_BLE_MESH_MODEL_OP_NET_KEY_DELETE (*C macro*), 435
ESP_BLE_MESH_MODEL_OP_NET_KEY_GET (*C macro*), 433
ESP_BLE_MESH_MODEL_OP_NET_KEY_LIST (*C macro*), 436
ESP_BLE_MESH_MODEL_OP_NET_KEY_STATUS (*C macro*), 436
ESP_BLE_MESH_MODEL_OP_NET_KEY_UPDATE (*C macro*), 435
ESP_BLE_MESH_MODEL_OP_NETWORK_TRANSMIT_GET (*C macro*), 434
ESP_BLE_MESH_MODEL_OP_NETWORK_TRANSMIT_SET (*C macro*), 436
ESP_BLE_MESH_MODEL_OP_NETWORK_TRANSMIT_STATUS (*C macro*), 437
ESP_BLE_MESH_MODEL_OP_NODE_IDENTITY_GET (*C macro*), 434
ESP_BLE_MESH_MODEL_OP_NODE_IDENTITY_SET (*C macro*), 435
ESP_BLE_MESH_MODEL_OP_NODE_IDENTITY_STATUS (*C macro*), 436
ESP_BLE_MESH_MODEL_OP_NODE_RESET (*C macro*), 435
ESP_BLE_MESH_MODEL_OP_NODE_RESET_STATUS (*C macro*), 437
ESP_BLE_MESH_MODEL_OP_RELAY_GET (*C macro*), 433
ESP_BLE_MESH_MODEL_OP_RELAY_SET (*C macro*), 434
ESP_BLE_MESH_MODEL_OP_RELAY_STATUS (*C macro*), 436
ESP_BLE_MESH_MODEL_OP_SCENE_DELETE (*C macro*), 443
ESP_BLE_MESH_MODEL_OP_SCENE_DELETE_UNACK (*C macro*), 443
ESP_BLE_MESH_MODEL_OP_SCENE_GET (*C macro*), 443
ESP_BLE_MESH_MODEL_OP_SCENE_RECALL (*C macro*), 443
ESP_BLE_MESH_MODEL_OP_SCENE_RECALL_UNACK (*C macro*), 443
ESP_BLE_MESH_MODEL_OP_SCENE_REGISTER_GET (*C macro*), 443
ESP_BLE_MESH_MODEL_OP_SCENE_REGISTER_STATUS (*C macro*), 443
ESP_BLE_MESH_MODEL_OP_SCENE_STATUS (*C macro*), 443
ESP_BLE_MESH_MODEL_OP_SCENE_STORE (*C macro*), 443
ESP_BLE_MESH_MODEL_OP_SCENE_STORE_UNACK (*C macro*), 443
ESP_BLE_MESH_MODEL_OP_SCHEDULER_ACT_GET (*C macro*), 443
ESP_BLE_MESH_MODEL_OP_SCHEDULER_ACT_SET (*C macro*), 444
ESP_BLE_MESH_MODEL_OP_SCHEDULER_ACT_SET_UNACK (*C macro*), 444
ESP_BLE_MESH_MODEL_OP_SCHEDULER_ACT_STATUS (*C macro*), 443
ESP_BLE_MESH_MODEL_OP_SCHEDULER_GET (*C macro*), 443
ESP_BLE_MESH_MODEL_OP_SCHEDULER_STATUS (*C macro*), 443
ESP_BLE_MESH_MODEL_OP_SENSOR_CADENCE_GET (*C macro*), 442
ESP_BLE_MESH_MODEL_OP_SENSOR_CADENCE_SET (*C macro*), 442
ESP_BLE_MESH_MODEL_OP_SENSOR_CADENCE_SET_UNACK (*C macro*), 442
ESP_BLE_MESH_MODEL_OP_SENSOR_CADENCE_STATUS (*C macro*), 442
ESP_BLE_MESH_MODEL_OP_SENSOR_COLUMN_GET (*C macro*), 442
ESP_BLE_MESH_MODEL_OP_SENSOR_COLUMN_STATUS (*C macro*), 442
ESP_BLE_MESH_MODEL_OP_SENSOR_DESCRIPTOR_GET (*C macro*), 442
ESP_BLE_MESH_MODEL_OP_SENSOR_DESCRIPTOR_STATUS (*C macro*), 442
ESP_BLE_MESH_MODEL_OP_SENSOR_GET (*C macro*), 442
ESP_BLE_MESH_MODEL_OP_SENSOR_SERIES_GET (*C macro*), 442
ESP_BLE_MESH_MODEL_OP_SENSOR_SERIES_STATUS (*C macro*), 442
ESP_BLE_MESH_MODEL_OP_SENSOR_SETTING_GET (*C macro*), 442
ESP_BLE_MESH_MODEL_OP_SENSOR_SETTING_SET (*C macro*), 442
ESP_BLE_MESH_MODEL_OP_SENSOR_SETTING_SET_UNACK (*C macro*), 442
ESP_BLE_MESH_MODEL_OP_SENSOR_SETTING_STATUS (*C macro*), 442
ESP_BLE_MESH_MODEL_OP_SENSOR_SETTINGS_GET (*C macro*), 442
ESP_BLE_MESH_MODEL_OP_SENSOR_SETTINGS_STATUS (*C macro*), 442
ESP_BLE_MESH_MODEL_OP_SENSOR_STATUS (*C macro*), 442
ESP_BLE_MESH_MODEL_OP_SIG_MODEL_APP_GET (*C macro*), 434
ESP_BLE_MESH_MODEL_OP_SIG_MODEL_APP_LIST (*C macro*), 436
ESP_BLE_MESH_MODEL_OP_SIG_MODEL_SUB_GET (*C macro*), 434
ESP_BLE_MESH_MODEL_OP_SIG_MODEL_SUB_LIST (*C macro*), 436
esp_ble_mesh_model_op_t (*C++ struct*), 416
esp_ble_mesh_model_op_t::min_len (*C++ member*), 417
esp_ble_mesh_model_op_t::opcode (*C++*

member), 417
esp_ble_mesh_model_op_t::param_cb (*C++ member*), 417
ESP_BLE_MESH_MODEL_OP_TAI_UTC_DELTA_GET (*C macro*), 443
ESP_BLE_MESH_MODEL_OP_TAI_UTC_DELTA_SET (*C macro*), 443
ESP_BLE_MESH_MODEL_OP_TAI_UTC_DELTA_STATUS (*C macro*), 443
ESP_BLE_MESH_MODEL_OP_TIME_GET (*C macro*), 442
ESP_BLE_MESH_MODEL_OP_TIME_ROLE_GET (*C macro*), 442
ESP_BLE_MESH_MODEL_OP_TIME_ROLE_SET (*C macro*), 443
ESP_BLE_MESH_MODEL_OP_TIME_ROLE_STATUS (*C macro*), 443
ESP_BLE_MESH_MODEL_OP_TIME_SET (*C macro*), 442
ESP_BLE_MESH_MODEL_OP_TIME_STATUS (*C macro*), 442
ESP_BLE_MESH_MODEL_OP_TIME_ZONE_GET (*C macro*), 443
ESP_BLE_MESH_MODEL_OP_TIME_ZONE_SET (*C macro*), 443
ESP_BLE_MESH_MODEL_OP_TIME_ZONE_STATUS (*C macro*), 443
ESP_BLE_MESH_MODEL_OP_VENDOR_MODEL_APP_GET (*C macro*), 434
ESP_BLE_MESH_MODEL_OP_VENDOR_MODEL_APP_LIST (*C macro*), 436
ESP_BLE_MESH_MODEL_OP_VENDOR_MODEL_SUB_GET (*C macro*), 434
ESP_BLE_MESH_MODEL_OP_VENDOR_MODEL_SUB_LIST (*C macro*), 436
ESP_BLE_MESH_MODEL_PUB_DEFINE (*C macro*), 429
esp_ble_mesh_model_pub_t (*C++ struct*), 415
esp_ble_mesh_model_pub_t::app_idx (*C++ member*), 415
esp_ble_mesh_model_pub_t::count (*C++ member*), 416
esp_ble_mesh_model_pub_t::cred (*C++ member*), 415
esp_ble_mesh_model_pub_t::dev_role (*C++ member*), 416
esp_ble_mesh_model_pub_t::fast_period (*C++ member*), 416
esp_ble_mesh_model_pub_t::model (*C++ member*), 415
esp_ble_mesh_model_pub_t::msg (*C++ member*), 416
esp_ble_mesh_model_pub_t::period (*C++ member*), 416
esp_ble_mesh_model_pub_t::period_div (*C++ member*), 416
esp_ble_mesh_model_pub_t::period_start (*C++ member*), 416
esp_ble_mesh_model_pub_t::publish_addr (*C++ member*), 415
esp_ble_mesh_model_pub_t::retransmit (*C++ member*), 416
esp_ble_mesh_model_pub_t::send_rel (*C++ member*), 416
esp_ble_mesh_model_pub_t::timer (*C++ member*), 416
esp_ble_mesh_model_pub_t::ttl (*C++ member*), 416
esp_ble_mesh_model_pub_t::update (*C++ member*), 416
esp_ble_mesh_model_publish (*C++ function*), 465
ESP_BLE_MESH_MODEL_SCENE_CLI (*C macro*), 604
ESP_BLE_MESH_MODEL_SCENE_SETUP_SRV (*C macro*), 606
ESP_BLE_MESH_MODEL_SCENE_SRV (*C macro*), 605
ESP_BLE_MESH_MODEL_SCHEDULER_CLI (*C macro*), 604
ESP_BLE_MESH_MODEL_SCHEDULER_SETUP_SRV (*C macro*), 606
ESP_BLE_MESH_MODEL_SCHEDULER_SRV (*C macro*), 606
ESP_BLE_MESH_MODEL_SENSOR_CLI (*C macro*), 576
ESP_BLE_MESH_MODEL_SENSOR_SETUP_SRV (*C macro*), 577
ESP_BLE_MESH_MODEL_SENSOR_SRV (*C macro*), 577
ESP_BLE_MESH_MODEL_STATUS_CANNOT_SET_RANGE_MAX (*C macro*), 448
ESP_BLE_MESH_MODEL_STATUS_CANNOT_SET_RANGE_MIN (*C macro*), 448
ESP_BLE_MESH_MODEL_STATUS_SUCCESS (*C macro*), 448
esp_ble_mesh_model_status_t (*C++ type*), 450
esp_ble_mesh_model_subscribe_group_addr (*C++ function*), 461
esp_ble_mesh_model_t (*C++ type*), 448
ESP_BLE_MESH_MODEL_TIME_CLI (*C macro*), 604
ESP_BLE_MESH_MODEL_TIME_SETUP_SRV (*C macro*), 605
ESP_BLE_MESH_MODEL_TIME_SRV (*C macro*), 605
esp_ble_mesh_model_unsubscribe_group_addr (*C++ function*), 461
esp_ble_mesh_msg_ctx_t (*C++ struct*), 418
esp_ble_mesh_msg_ctx_t::addr (*C++ member*), 418
esp_ble_mesh_msg_ctx_t::app_idx (*C++ member*), 418
esp_ble_mesh_msg_ctx_t::model (*C++ member*), 419

esp_ble_mesh_msg_ctx_t::net_idx (C++ member), 418
esp_ble_mesh_msg_ctx_t::recv_dst (C++ member), 418
esp_ble_mesh_msg_ctx_t::recv_op (C++ member), 419
esp_ble_mesh_msg_ctx_t::recv_rssi (C++ member), 418
esp_ble_mesh_msg_ctx_t::recv_ttl (C++ member), 418
esp_ble_mesh_msg_ctx_t::send_rel (C++ member), 418
esp_ble_mesh_msg_ctx_t::send_ttl (C++ member), 419
esp_ble_mesh_msg_ctx_t::srv_send (C++ member), 419
ESP_BLE_MESH_NET_PRIMARY (C macro), 426
ESP_BLE_MESH_NO_FAULT (C macro), 518
ESP_BLE_MESH_NO_LOAD_ERROR (C macro), 518
ESP_BLE_MESH_NO_LOAD_WARNING (C macro), 518
esp_ble_mesh_node_add_local_app_key (C++ function), 462
esp_ble_mesh_node_add_local_net_key (C++ function), 462
esp_ble_mesh_node_bind_app_key_to_local_model (C++ function), 462
esp_ble_mesh_node_get_local_app_key (C++ function), 462
esp_ble_mesh_node_get_local_net_key (C++ function), 462
ESP_BLE_MESH_NODE_IDENTITY_NOT_SUPPORTED (C macro), 427
ESP_BLE_MESH_NODE_IDENTITY_RUNNING (C macro), 427
ESP_BLE_MESH_NODE_IDENTITY_STOPPED (C macro), 427
esp_ble_mesh_node_input_number (C++ function), 472
esp_ble_mesh_node_input_string (C++ function), 472
esp_ble_mesh_node_is_provisioned (C++ function), 472
esp_ble_mesh_node_local_reset (C++ function), 465
ESP_BLE_MESH_NODE_NAME_MAX_LEN (C macro), 425
esp_ble_mesh_node_prov_disable (C++ function), 472
esp_ble_mesh_node_prov_enable (C++ function), 472
esp_ble_mesh_node_set_oob_pub_key (C++ function), 472
esp_ble_mesh_node_t (C++ struct), 420
esp_ble_mesh_node_t::addr (C++ member), 421
esp_ble_mesh_node_t::addr_type (C++ member), 421
esp_ble_mesh_node_t::comp_data (C++ member), 421
esp_ble_mesh_node_t::comp_length (C++ member), 421
esp_ble_mesh_node_t::dev_key (C++ member), 421
esp_ble_mesh_node_t::dev_uuid (C++ member), 421
esp_ble_mesh_node_t::element_num (C++ member), 421
esp_ble_mesh_node_t::flags (C++ member), 421
esp_ble_mesh_node_t::iv_index (C++ member), 421
esp_ble_mesh_node_t::name (C++ member), 421
esp_ble_mesh_node_t::net_idx (C++ member), 421
esp_ble_mesh_node_t::oob_info (C++ member), 421
esp_ble_mesh_node_t::unicast_addr (C++ member), 421
ESP_BLE_MESH_OCTET16_LEN (C macro), 426
esp_ble_mesh_octet16_t (C++ type), 448
ESP_BLE_MESH_OCTET8_LEN (C macro), 426
esp_ble_mesh_octet8_t (C++ type), 448
esp_ble_mesh_oob_method_t (C++ enum), 450
esp_ble_mesh_oob_method_t::ESP_BLE_MESH_INPUT_OOB (C++ enumerator), 450
esp_ble_mesh_oob_method_t::ESP_BLE_MESH_NO_OOB (C++ enumerator), 450
esp_ble_mesh_oob_method_t::ESP_BLE_MESH_OUTPUT_OO (C++ enumerator), 450
esp_ble_mesh_oob_method_t::ESP_BLE_MESH_STATIC_OO (C++ enumerator), 450
esp_ble_mesh_opcode_config_client_get_t (C++ type), 448
esp_ble_mesh_opcode_config_client_set_t (C++ type), 449
esp_ble_mesh_opcode_config_status_t (C++ type), 449
esp_ble_mesh_opcode_health_client_get_t (C++ type), 449
esp_ble_mesh_opcode_health_client_set_t (C++ type), 449
esp_ble_mesh_opcode_t (C++ type), 450
esp_ble_mesh_output_action_t (C++ enum), 450
esp_ble_mesh_output_action_t::ESP_BLE_MESH_BEEP (C++ enumerator), 450
esp_ble_mesh_output_action_t::ESP_BLE_MESH_BLINK (C++ enumerator), 450
esp_ble_mesh_output_action_t::ESP_BLE_MESH_DISPLA (C++ enumerator), 451
esp_ble_mesh_output_action_t::ESP_BLE_MESH_DISPLA (C++ enumerator), 451
esp_ble_mesh_output_action_t::ESP_BLE_MESH_NO_OUT (C++ enumerator), 450

esp_ble_mesh_output_action_t::ESP_BLE_MESH_BLINK (*C++ enumerator*), 451
ESP_BLE_MESH_OVERFLOW_ERROR (*C macro*), 519
ESP_BLE_MESH_OVERFLOW_WARNING (*C macro*), 519
ESP_BLE_MESH_OVERHEAT_ERROR (*C macro*), 518
ESP_BLE_MESH_OVERHEAT_WARNING (*C macro*), 518
ESP_BLE_MESH_OVERLOAD_ERROR (*C macro*), 518
ESP_BLE_MESH_OVERLOAD_WARNING (*C macro*), 518
ESP_BLE_MESH_POWER_SUPPLY_INTERRUPTED_ERROR (*C macro*), 518
ESP_BLE_MESH_POWER_SUPPLY_INTERRUPTED_WARNING (*C macro*), 518
ESP_BLE_MESH_PROV (*C macro*), 429
esp_ble_mesh_prov_adv_cb_t (*C++ type*), 477
esp_ble_mesh_prov_bearer_t (*C++ enum*), 451
esp_ble_mesh_prov_bearer_t::ESP_BLE_MESH_PROV_ADV (*C++ enumerator*), 451
esp_ble_mesh_prov_bearer_t::ESP_BLE_MESH_PROV_GATT (*C++ enumerator*), 451
esp_ble_mesh_prov_cb_event_t (*C++ enum*), 452
esp_ble_mesh_prov_cb_event_t::ESP_BLE_MESH_CLOSE_EVT (*C++ enumerator*), 458
esp_ble_mesh_prov_cb_event_t::ESP_BLE_MESH_LINK_CLOSE_EVT (*C++ enumerator*), 457
esp_ble_mesh_prov_cb_event_t::ESP_BLE_MESH_LINK_OPEN_EVT (*C++ enumerator*), 457
esp_ble_mesh_prov_cb_event_t::ESP_BLE_MESH_PB_ADV_CLOSE_EVT (*C++ enumerator*), 456
esp_ble_mesh_prov_cb_event_t::ESP_BLE_MESH_PB_ADV_OPEN_EVT (*C++ enumerator*), 456
esp_ble_mesh_prov_cb_event_t::ESP_BLE_MESH_PB_GATT_CLOSE_EVT (*C++ enumerator*), 456
esp_ble_mesh_prov_cb_event_t::ESP_BLE_MESH_PB_GATT_OPEN_EVT (*C++ enumerator*), 457
esp_ble_mesh_prov_cb_event_t::ESP_BLE_MESH_PROV_COMP_EVT (*C++ enumerator*), 456
esp_ble_mesh_prov_cb_event_t::ESP_BLE_MESH_PROV_REGISTER_COMP_EVT (*C++ enumerator*), 457
esp_ble_mesh_prov_cb_event_t::ESP_BLE_MESH_SET_DEVICE_PUBLIC_KEY_COMP_EVT (*C++ enumerator*), 454
esp_ble_mesh_prov_cb_event_t::ESP_BLE_MESH_SET_NODE_NAME_COMP_EVT (*C++ enumerator*), 453
esp_ble_mesh_prov_cb_event_t::ESP_BLE_MESH_SET_OOB_PUB_KEY_COMP_EVT (*C++ enumerator*), 454
esp_ble_mesh_prov_cb_event_t::ESP_BLE_MESH_SET_UNPROV_DEV_NAME_COMP_EVT (*C++ enumerator*), 453
esp_ble_mesh_prov_cb_event_t::ESP_BLE_MESH_NODE_PROV_COMPLETE_EVT (*C++ enumerator*), 453
esp_ble_mesh_prov_cb_event_t::ESP_BLE_MESH_NODE_PROV_DISABLE_COMP_EVT (*C++ enumerator*), 453
esp_ble_mesh_prov_cb_event_t::ESP_BLE_MESH_NODE_PROV_ENABLE_COMP_EVT (*C++ enumerator*), 453
esp_ble_mesh_prov_cb_event_t::ESP_BLE_MESH_NODE_PROV_ESTABLISH_LINK_COMP_EVT (*C++ enumerator*), 453
esp_ble_mesh_prov_cb_event_t::ESP_BLE_MESH_NODE_PROV_INPUT_EVT (*C++ enumerator*), 453
esp_ble_mesh_prov_cb_event_t::ESP_BLE_MESH_NODE_PROV_LINK_CLOSE_EVT (*C++ enumerator*), 453
esp_ble_mesh_prov_cb_event_t::ESP_BLE_MESH_NODE_PROV_LINK_OPEN_EVT (*C++ enumerator*), 453
esp_ble_mesh_prov_cb_event_t::ESP_BLE_MESH_NODE_PROV_OUTPUT_EVT (*C++ enumerator*), 453
esp_ble_mesh_prov_cb_event_t::ESP_BLE_MESH_NODE_PROV_RESET_EVT (*C++ enumerator*), 453
esp_ble_mesh_prov_cb_event_t::ESP_BLE_MESH_NODE_PROV_SET_OOB_PUB_KEY_COMP_EVT (*C++ enumerator*), 453
esp_ble_mesh_prov_cb_event_t::ESP_BLE_MESH_NODE_PROV_UNPROV_DEV_REPORT_EVT (*C++ enumerator*), 452
esp_ble_mesh_prov_cb_event_t::ESP_BLE_MESH_PROV_REGISTER_COMP_EVT (*C++ enumerator*), 452
esp_ble_mesh_prov_cb_event_t::ESP_BLE_MESH_PROXY_CLIENT_RECV_PUBLISH_MSG_EVT (*C++ enumerator*), 452
esp_ble_mesh_prov_cb_event_t::ESP_BLE_MESH_PROXY_CLIENT_SEND_COMP_EVT (*C++ enumerator*), 455
esp_ble_mesh_prov_cb_event_t::ESP_BLE_MESH_PROXY_CLIENT_SET_FILTER_TYPE_COMP_EVT (*C++ enumerator*), 455
esp_ble_mesh_prov_cb_event_t::ESP_BLE_MESH_PROXY_CONFIG_ADV_CLEAR_COMP_EVT (*C++ enumerator*), 455
esp_ble_mesh_prov_cb_event_t::ESP_BLE_MESH_PROXY_CONFIG_ADV_SET_COMP_EVT (*C++ enumerator*), 455
esp_ble_mesh_prov_cb_event_t::ESP_BLE_MESH_PROXY_CONFIG_FILTER_CLEAR_COMP_EVT (*C++ enumerator*), 454
esp_ble_mesh_prov_cb_event_t::ESP_BLE_MESH_PROXY_CONFIG_FILTER_SET_COMP_EVT (*C++ enumerator*), 455
esp_ble_mesh_prov_cb_event_t::ESP_BLE_MESH_PROXY_CONFIG_FILTER_STATUS_EVT (*C++ enumerator*), 455
esp_ble_mesh_prov_cb_event_t::ESP_BLE_MESH_PROXY_CONFIG_PROXY_PDU_RECV_EVT (*C++ enumerator*), 456
esp_ble_mesh_prov_cb_event_t::ESP_BLE_MESH_PROXY_CONFIG_PROXY_PDU_SEND_COMP_EVT (*C++ enumerator*), 456

esp_ble_mesh_prov_cb_event_t::ESP_BLE_MESH_PROVISIONER_PROV_DEV_ERASE_SETTINGS_COMP_EVT (C++ enumerator), 456
esp_ble_mesh_prov_cb_event_t::ESP_BLE_MESH_PROVISIONER_PROV_DEV_ERASE_START_EVT (C++ enumerator), 457
esp_ble_mesh_prov_cb_event_t::ESP_BLE_MESH_PROVISIONER_PROV_ENABLE_COMP_EVT (C++ enumerator), 455
esp_ble_mesh_prov_cb_event_t::ESP_BLE_MESH_PROVISIONER_PROV_ENABLE_START_EVT (C++ enumerator), 457
esp_ble_mesh_prov_cb_event_t::ESP_BLE_MESH_PROVISIONER_PROV_OPEN_SETTINGS_EVT (C++ enumerator), 456
esp_ble_mesh_prov_cb_event_t::ESP_BLE_MESH_PROVISIONER_PROV_OPEN_SETTINGS_EVT (C++ enumerator), 457
esp_ble_mesh_prov_cb_event_t::ESP_BLE_MESH_PROVISIONER_PROV_READ_COMP_EVT (C++ enumerator), 454
esp_ble_mesh_prov_cb_event_t::ESP_BLE_MESH_PROVISIONER_PROV_READ_COMP_EVT (C++ enumerator), 457
esp_ble_mesh_prov_cb_event_t::ESP_BLE_MESH_PROVISIONER_PROV_READ_WITH_ADDR_COMP_EVT (C++ enumerator), 454
esp_ble_mesh_prov_cb_event_t::ESP_BLE_MESH_PROVISIONER_PROV_READ_WITH_ADDR_COMP_EVT (C++ enumerator), 457
esp_ble_mesh_prov_cb_event_t::ESP_BLE_MESH_PROVISIONER_PROV_SET_COMP_EVT (C++ enumerator), 454
esp_ble_mesh_prov_cb_event_t::ESP_BLE_MESH_PROVISIONER_PROV_SET_COMP_EVT (C++ enumerator), 457
esp_ble_mesh_prov_cb_event_t::ESP_BLE_MESH_PROVISIONER_PROV_SET_DEV_KEY_COMP_EVT (C++ enumerator), 454
esp_ble_mesh_prov_cb_event_t::ESP_BLE_MESH_PROVISIONER_PROV_SET_DEV_KEY_COMP_EVT (C++ enumerator), 457
esp_ble_mesh_prov_cb_event_t::ESP_BLE_MESH_PROVISIONER_PROV_SET_NODE_NAME_COMP_EVT (C++ enumerator), 455
esp_ble_mesh_prov_cb_event_t::ESP_BLE_MESH_PROVISIONER_PROV_SET_NODE_NAME_COMP_EVT (C++ enumerator), 457
esp_ble_mesh_prov_cb_event_t::ESP_BLE_MESH_PROVISIONER_PROV_SET_OOB_PUB_KEY_COMP_EVT (C++ enumerator), 455
esp_ble_mesh_prov_cb_event_t::ESP_BLE_MESH_PROVISIONER_PROV_SET_OOB_PUB_KEY_COMP_EVT (C++ enumerator), 456
esp_ble_mesh_prov_cb_event_t::ESP_BLE_MESH_PROVISIONER_PROV_SET_STATIC_OOB_VAL_COMP_EVT (C++ enumerator), 454
esp_ble_mesh_prov_cb_event_t::ESP_BLE_MESH_PROVISIONER_PROV_SET_STATIC_OOB_VAL_COMP_EVT (C++ enumerator), 456
esp_ble_mesh_prov_cb_event_t::ESP_BLE_MESH_PROVISIONER_PROV_UNPROV_DEV_ADD_COMP_EVT (C++ enumerator), 454
esp_ble_mesh_prov_cb_event_t::ESP_BLE_MESH_PROVISIONER_PROV_UNPROV_DEV_ADD_COMP_EVT (C++ union), 384
esp_ble_mesh_prov_cb_event_t::ESP_BLE_MESH_PROVISIONER_PROV_UNPROV_DEV_ADD_EVT (C++ enumerator), 454
esp_ble_mesh_prov_cb_event_t::ESP_BLE_MESH_PROVISIONER_PROV_UNPROV_DEV_ADD_EVT (C++ struct), 392
esp_ble_mesh_prov_cb_event_t::ESP_BLE_MESH_PROVISIONER_PROV_UNPROV_DEV_ADD_COMP_EVT_ctx (C++ enumerator), 455
esp_ble_mesh_prov_cb_event_t::ESP_BLE_MESH_PROVISIONER_PROV_UNPROV_DEV_ADD_COMP_EVT_ctx (C++ member), 392
esp_ble_mesh_prov_cb_event_t::ESP_BLE_MESH_PROVISIONER_PROV_UNPROV_DEV_ADD_EVT_ctx (C++ enumerator), 454
esp_ble_mesh_prov_cb_event_t::ESP_BLE_MESH_PROVISIONER_PROV_UNPROV_DEV_ADD_EVT_ctx (C++ struct), 392
esp_ble_mesh_prov_cb_event_t::ESP_BLE_MESH_PROVISIONER_RECV_HEARTBEAT_MESSAGE_EVT (C++ enumerator), 456
esp_ble_mesh_prov_cb_event_t::ESP_BLE_MESH_PROVISIONER_RECV_HEARTBEAT_MESSAGE_EVT (C++ member), 392
esp_ble_mesh_prov_cb_event_t::ESP_BLE_MESH_PROVISIONER_RECV_UNPROV_ADV_PKT_EVT (C++ enumerator), 454
esp_ble_mesh_prov_cb_event_t::ESP_BLE_MESH_PROVISIONER_RECV_UNPROV_ADV_PKT_EVT (C++ struct), 392
esp_ble_mesh_prov_cb_event_t::ESP_BLE_MESH_PROVISIONER_SET_DEV_UUID_MATCH_COMP_EVT (C++ enumerator), 454
esp_ble_mesh_prov_cb_event_t::ESP_BLE_MESH_PROVISIONER_SET_DEV_UUID_MATCH_COMP_EVT (C++ member), 393
esp_ble_mesh_prov_cb_event_t::ESP_BLE_MESH_PROVISIONER_SET_HEARTBEAT_FILTER_COMP_EVT (C++ enumerator), 456
esp_ble_mesh_prov_cb_event_t::ESP_BLE_MESH_PROVISIONER_SET_HEARTBEAT_FILTER_COMP_EVT (C++ member), 393
esp_ble_mesh_prov_cb_event_t::ESP_BLE_MESH_PROVISIONER_SET_HEARTBEAT_FILTER_COMP_EVT (C++ enum), 392
esp_ble_mesh_prov_cb_event_t::ESP_BLE_MESH_PROVISIONER_SET_NODE_NAME_COMP_EVT (C++ enumerator), 455
esp_ble_mesh_prov_cb_event_t::ESP_BLE_MESH_PROVISIONER_SET_NODE_NAME_COMP_EVT (C++ enumerator), 392
esp_ble_mesh_prov_cb_event_t::ESP_BLE_MESH_PROVISIONER_SET_PRIMARY_ELEM_ADDR_COMP_EVT (C++ enumerator), 455
esp_ble_mesh_prov_cb_event_t::ESP_BLE_MESH_PROVISIONER_SET_PRIMARY_ELEM_ADDR_COMP_EVT (C++ enumerator), 392
esp_ble_mesh_prov_cb_event_t::ESP_BLE_MESH_PROVISIONER_SET_PROV_DATA_INFO_COMP_EVT (C++ enumerator), 454
esp_ble_mesh_prov_cb_event_t::ESP_BLE_MESH_PROVISIONER_SET_PROV_DATA_INFO_COMP_EVT (C++ enumerator), 392
esp_ble_mesh_prov_cb_event_t::ESP_BLE_MESH_PROVISIONER_SET_STATIC_OOB_VALUE_COMP_EVT (C++ enumerator), 455
esp_ble_mesh_prov_cb_event_t::ESP_BLE_MESH_PROVISIONER_SET_STATIC_OOB_VALUE_COMP_EVT (C++ enumerator), 392
esp_ble_mesh_prov_cb_event_t::ESP_BLE_MESH_PROVISIONER_STORE_NODE_COMP_DATA_COMP_EVT (C++ enumerator), 455
esp_ble_mesh_prov_cb_event_t::ESP_BLE_MESH_PROVISIONER_STORE_NODE_COMP_DATA_COMP_EVT (C++ enumerator), 392
esp_ble_mesh_prov_cb_event_t::ESP_BLE_MESH_PROVISIONER_UPDATE_LOCAL_APP_KEY_COMP_EVT (C++ enumerator), 455
esp_ble_mesh_prov_cb_event_t::ESP_BLE_MESH_PROVISIONER_UPDATE_LOCAL_APP_KEY_COMP_EVT (C++ struct), 393
esp_ble_mesh_prov_cb_event_t::ESP_BLE_MESH_PROVISIONER_UPDATE_LOCAL_NET_KEY_COMP_EVT (C++ enumerator), 455
esp_ble_mesh_prov_cb_event_t::ESP_BLE_MESH_PROVISIONER_UPDATE_LOCAL_NET_KEY_COMP_EVT (C++ member), 393
esp_ble_mesh_prov_cb_event_t::ESP_BLE_MESH_PROXY_CLIENT_ADV_PKT_EVT (C++ enumerator), 457
esp_ble_mesh_prov_cb_event_t::ESP_BLE_MESH_PROXY_CLIENT_ADV_PKT_EVT (C++ member), 393

esp_ble_mesh_prov_cb_param_t::ble_mesh_input_evt_param (C++ struct), 393
esp_ble_mesh_prov_cb_param_t::ble_mesh_model_unsub_group_addr_comp_param (C++ member), 395
esp_ble_mesh_prov_cb_param_t::ble_mesh_input_evt_param::action (C++ member), 393
esp_ble_mesh_prov_cb_param_t::ble_mesh_model_unsub_group_addr_comp_param::err_code (C++ member), 395
esp_ble_mesh_prov_cb_param_t::ble_mesh_input_evt_param::size (C++ member), 393
esp_ble_mesh_prov_cb_param_t::ble_mesh_model_unsub_group_addr_comp_param::group_addr (C++ member), 396
esp_ble_mesh_prov_cb_param_t::ble_mesh_input_number_prov_data_param (C++ struct), 393
esp_ble_mesh_prov_cb_param_t::ble_mesh_model_unsub_group_addr_comp_param::model_handle (C++ member), 396
esp_ble_mesh_prov_cb_param_t::ble_mesh_input_number_prov_data_param::number (C++ member), 393
esp_ble_mesh_prov_cb_param_t::ble_mesh_node_add_local_app_key_comp_param (C++ struct), 396
esp_ble_mesh_prov_cb_param_t::ble_mesh_input_string_prov_data_param (C++ struct), 393
esp_ble_mesh_prov_cb_param_t::ble_mesh_node_add_local_app_key_comp_param::app_idx (C++ member), 396
esp_ble_mesh_prov_cb_param_t::ble_mesh_input_string_prov_data_param::number (C++ member), 394
esp_ble_mesh_prov_cb_param_t::ble_mesh_node_add_local_app_key_comp_param::err_code (C++ member), 396
esp_ble_mesh_prov_cb_param_t::ble_mesh_link_close_prov_data_param (C++ struct), 394
esp_ble_mesh_prov_cb_param_t::ble_mesh_node_add_local_net_key_comp_param (C++ member), 396
esp_ble_mesh_prov_cb_param_t::ble_mesh_link_close_prov_data_param::bearer (C++ member), 394
esp_ble_mesh_prov_cb_param_t::ble_mesh_node_add_local_net_key_comp_param::err_code (C++ struct), 396
esp_ble_mesh_prov_cb_param_t::ble_mesh_link_open_prov_data_param (C++ struct), 394
esp_ble_mesh_prov_cb_param_t::ble_mesh_node_add_local_net_key_comp_param::net_idx (C++ member), 396
esp_ble_mesh_prov_cb_param_t::ble_mesh_link_open_prov_data_param::bearer (C++ member), 394
esp_ble_mesh_prov_cb_param_t::ble_mesh_node_bind_app_key_to_model_comp_param (C++ struct), 396
esp_ble_mesh_prov_cb_param_t::ble_mesh_node_bind_app_key_to_model_comp_param::err_code (C++ member), 394
esp_ble_mesh_prov_cb_param_t::ble_mesh_node_bind_app_key_to_model_comp_param::model_handle (C++ member), 396
esp_ble_mesh_prov_cb_param_t::ble_mesh_node_bind_app_key_to_model_comp_param::ret_code (C++ struct), 394
esp_ble_mesh_prov_cb_param_t::ble_mesh_node_enable_mesh_node_comp_param (C++ member), 397
esp_ble_mesh_prov_cb_param_t::ble_mesh_node_bind_app_key_to_model_comp_param::status_code (C++ member), 394
esp_ble_mesh_prov_cb_param_t::ble_mesh_node_enable_mesh_node_comp_param::err_code (C++ member), 396
esp_ble_mesh_prov_cb_param_t::ble_mesh_node_bind_app_key_to_model_comp_param::status_model (C++ struct), 394
esp_ble_mesh_prov_cb_param_t::ble_mesh_node_prov_complete_param (C++ struct), 396
esp_ble_mesh_prov_cb_param_t::ble_mesh_node_bind_app_key_to_model_comp_param::status_publish (C++ member), 394
esp_ble_mesh_prov_cb_param_t::ble_mesh_node_prov_complete_param::addr (C++ member), 396
esp_ble_mesh_prov_cb_param_t::ble_mesh_node_bind_app_key_to_model_comp_param::status_vnd_model (C++ struct), 394
esp_ble_mesh_prov_cb_param_t::ble_mesh_node_prov_complete_param::flags (C++ member), 396
esp_ble_mesh_prov_cb_param_t::ble_mesh_node_bind_app_key_to_model_comp_param::status_vnd_publish (C++ member), 394
esp_ble_mesh_prov_cb_param_t::ble_mesh_node_prov_complete_param::iv_index (C++ member), 396
esp_ble_mesh_prov_cb_param_t::ble_mesh_node_bind_app_key_to_model_comp_param::status_vnd_publish::model_id (C++ member), 394
esp_ble_mesh_prov_cb_param_t::ble_mesh_node_prov_complete_param::net_idx (C++ member), 396
esp_ble_mesh_prov_cb_param_t::ble_mesh_node_bind_app_key_to_model_comp_param::status_vnd_publish::publish_addr (C++ member), 394
esp_ble_mesh_prov_cb_param_t::ble_mesh_node_prov_complete_param::uuid (C++ member), 396
esp_ble_mesh_prov_cb_param_t::ble_mesh_node_bind_app_key_to_model_comp_param::status_vnd_publish::vnd_model_id (C++ member), 394
esp_ble_mesh_prov_cb_param_t::ble_mesh_node_reset_local_mesh_node_comp_param (C++ struct), 396
esp_ble_mesh_prov_cb_param_t::ble_mesh_node_bind_app_key_to_model_comp_param::status_vnd_publish::vnd_publish_addr (C++ member), 394
esp_ble_mesh_prov_cb_param_t::ble_mesh_output_num_prov_data_param (C++ struct), 397
esp_ble_mesh_prov_cb_param_t::ble_mesh_node_reset_local_mesh_node_comp_param::err_code (C++ member), 396
esp_ble_mesh_prov_cb_param_t::ble_mesh_output_num_prov_data_param::action (C++ member), 394
esp_ble_mesh_prov_cb_param_t::ble_mesh_output_num_prov_data_param::number (C++ member), 397
esp_ble_mesh_prov_cb_param_t::ble_mesh_output_str_prov_data_param (C++ struct), 397
esp_ble_mesh_prov_cb_param_t::ble_mesh_output_str_prov_data_param::action (C++ member), 395
esp_ble_mesh_prov_cb_param_t::ble_mesh_output_str_prov_data_param::string (C++ member), 397
esp_ble_mesh_prov_cb_param_t::ble_mesh_provisioner_add_local_app_key_comp_param (C++ struct), 397
esp_ble_mesh_prov_cb_param_t::ble_mesh_provisioner_add_local_app_key_comp_param::app_idx (C++ member), 395
esp_ble_mesh_prov_cb_param_t::ble_mesh_provisioner_add_local_app_key_comp_param::err_code (C++ member), 397
esp_ble_mesh_prov_cb_param_t::ble_mesh_provisioner_add_local_net_key_comp_param (C++ struct), 397
esp_ble_mesh_prov_cb_param_t::ble_mesh_provisioner_add_local_net_key_comp_param::err_code (C++ member), 395
esp_ble_mesh_prov_cb_param_t::ble_mesh_provisioner_add_local_net_key_comp_param::net_idx (C++ member), 397
esp_ble_mesh_prov_cb_param_t::ble_mesh_provisioner_bind_app_key_to_model_comp_param (C++ struct), 397
esp_ble_mesh_prov_cb_param_t::ble_mesh_provisioner_bind_app_key_to_model_comp_param::err_code (C++ member), 395
esp_ble_mesh_prov_cb_param_t::ble_mesh_provisioner_bind_app_key_to_model_comp_param::model_handle (C++ member), 397
esp_ble_mesh_prov_cb_param_t::ble_mesh_provisioner_bind_app_key_to_model_comp_param::ret_code (C++ struct), 395
esp_ble_mesh_prov_cb_param_t::ble_mesh_provisioner_delete_local_app_key_comp_param (C++ struct), 397
esp_ble_mesh_prov_cb_param_t::ble_mesh_provisioner_bind_app_key_to_model_comp_param::status_code (C++ member), 395
esp_ble_mesh_prov_cb_param_t::ble_mesh_provisioner_delete_local_app_key_comp_param::app_idx (C++ member), 397
esp_ble_mesh_prov_cb_param_t::ble_mesh_provisioner_bind_app_key_to_model_comp_param::status_model (C++ struct), 395
esp_ble_mesh_prov_cb_param_t::ble_mesh_provisioner_delete_local_app_key_comp_param::err_code (C++ member), 397
esp_ble_mesh_prov_cb_param_t::ble_mesh_provisioner_bind_app_key_to_model_comp_param::status_publish (C++ member), 395
esp_ble_mesh_prov_cb_param_t::ble_mesh_provisioner_delete_local_net_key_comp_param (C++ struct), 397
esp_ble_mesh_prov_cb_param_t::ble_mesh_provisioner_bind_app_key_to_model_comp_param::status_vnd_model (C++ struct), 395
esp_ble_mesh_prov_cb_param_t::ble_mesh_provisioner_delete_local_net_key_comp_param::err_code (C++ member), 397
esp_ble_mesh_prov_cb_param_t::ble_mesh_provisioner_bind_app_key_to_model_comp_param::status_vnd_publish (C++ member), 395
esp_ble_mesh_prov_cb_param_t::ble_mesh_provisioner_delete_local_net_key_comp_param::net_idx (C++ member), 397
esp_ble_mesh_prov_cb_param_t::ble_mesh_provisioner_bind_app_key_to_model_comp_param::status_vnd_publish::model_id (C++ member), 395
esp_ble_mesh_prov_cb_param_t::ble_mesh_provisioner_prov_disable_comp_param (C++ struct), 397
esp_ble_mesh_prov_cb_param_t::ble_mesh_provisioner_bind_app_key_to_model_comp_param::status_vnd_publish::publish_addr (C++ member), 395
esp_ble_mesh_prov_cb_param_t::ble_mesh_provisioner_prov_disable_comp_param::err_code (C++ member), 397
esp_ble_mesh_prov_cb_param_t::ble_mesh_provisioner_bind_app_key_to_model_comp_param::status_vnd_publish::vnd_model_id (C++ member), 395
esp_ble_mesh_prov_cb_param_t::ble_mesh_provisioner_prov_enable_comp_param (C++ struct), 397
esp_ble_mesh_prov_cb_param_t::ble_mesh_provisioner_bind_app_key_to_model_comp_param::status_vnd_publish::vnd_publish_addr (C++ member), 395
esp_ble_mesh_prov_cb_param_t::ble_mesh_provisioner_prov_enable_comp_param::err_code (C++ member), 397
esp_ble_mesh_prov_cb_param_t::ble_mesh_output_num_prov_data_param (C++ struct), 395
esp_ble_mesh_prov_cb_param_t::ble_mesh_provisioner_prov_read_oob_pub_key_comp_param (C++ struct), 397
esp_ble_mesh_prov_cb_param_t::ble_mesh_output_num_prov_data_param::action (C++ member), 395
esp_ble_mesh_prov_cb_param_t::ble_mesh_provisioner_prov_read_oob_pub_key_comp_param::err_code (C++ member), 397
esp_ble_mesh_prov_cb_param_t::ble_mesh_output_num_prov_data_param::number (C++ member), 395
esp_ble_mesh_prov_cb_param_t::ble_mesh_provisioner_prov_read_oob_pub_key_comp_param::oob_pub_key_len (C++ member), 397
esp_ble_mesh_prov_cb_param_t::ble_mesh_output_str_prov_data_param (C++ struct), 395
esp_ble_mesh_prov_cb_param_t::ble_mesh_provisioner_prov_read_oob_pub_key_comp_param::oob_pub_key_x (C++ member), 397
esp_ble_mesh_prov_cb_param_t::ble_mesh_output_str_prov_data_param::action (C++ member), 395
esp_ble_mesh_prov_cb_param_t::ble_mesh_provisioner_prov_read_oob_pub_key_comp_param::oob_pub_key_y (C++ member), 397
esp_ble_mesh_prov_cb_param_t::ble_mesh_output_str_prov_data_param::string (C++ member), 395
esp_ble_mesh_prov_cb_param_t::ble_mesh_provisioner_set_dev_uuid_match_comp_param (C++ struct), 397
esp_ble_mesh_prov_cb_param_t::ble_mesh_provisioner_add_unprov_dev_comp_param (C++ struct), 397
esp_ble_mesh_prov_cb_param_t::ble_mesh_provisioner_set_dev_uuid_match_comp_param::err_code (C++ member), 397
esp_ble_mesh_prov_cb_param_t::ble_mesh_provisioner_add_unprov_dev_comp_param::err_code (C++ member), 398
esp_ble_mesh_prov_cb_param_t::ble_mesh_provisioner_set_dev_uuid_match_comp_param::match_len (C++ member), 397
esp_ble_mesh_prov_cb_param_t::ble_mesh_provisioner_add_unprov_dev_comp_param::mesh_prov_version (C++ struct), 398

esp_ble_mesh_prov_cb_param_t::ble_mesh_provisioner_prov_read_oob_pub_key_comp_t::oob_pub_key_x (C++ member), 398
esp_ble_mesh_prov_cb_param_t::ble_mesh_provisioner_prov_read_oob_pub_key_comp_t::oob_pub_key_y (C++ member), 398
esp_ble_mesh_prov_cb_param_t::ble_mesh_provisioner_recv_unprov_adv_pkt_t (C++ struct), 398
esp_ble_mesh_prov_cb_param_t::ble_mesh_provisioner_recv_unprov_adv_pkt_t::addr (C++ member), 398
esp_ble_mesh_prov_cb_param_t::ble_mesh_provisioner_recv_unprov_adv_pkt_t::adv_type (C++ member), 398
esp_ble_mesh_prov_cb_param_t::ble_mesh_provisioner_recv_unprov_adv_pkt_t::addr_type (C++ member), 398
esp_ble_mesh_prov_cb_param_t::ble_mesh_provisioner_recv_unprov_adv_pkt_t::dev_uuid (C++ member), 398
esp_ble_mesh_prov_cb_param_t::ble_mesh_provisioner_recv_unprov_adv_pkt_t::oob_info (C++ member), 398
esp_ble_mesh_prov_cb_param_t::ble_mesh_provisioner_recv_unprov_adv_pkt_t::oob_type (C++ member), 398
esp_ble_mesh_prov_cb_param_t::ble_mesh_provisioner_set_dev_uuid_match_t (C++ struct), 398
esp_ble_mesh_prov_cb_param_t::ble_mesh_provisioner_set_dev_uuid_match_t::dev_uuid (C++ member), 398
esp_ble_mesh_prov_cb_param_t::ble_mesh_provisioner_set_dev_uuid_match_t::len (C++ member), 398
esp_ble_mesh_prov_cb_param_t::ble_mesh_provisioner_set_dev_uuid_match_t::offset (C++ member), 398
esp_ble_mesh_prov_cb_param_t::ble_mesh_provisioner_set_dev_uuid_match_t::prov_after_match (C++ member), 398
esp_ble_mesh_prov_cb_param_t::ble_mesh_provisioner_set_static_oob_val_t (C++ struct), 398
esp_ble_mesh_prov_cb_param_t::ble_mesh_provisioner_set_static_oob_val_t::len (C++ member), 398
esp_ble_mesh_prov_cb_param_t::ble_mesh_provisioner_set_static_oob_val_t::value (C++ member), 398
esp_ble_mesh_prov_cb_param_t::ble_mesh_provisioner_stop_prov_t (C++ struct), 398
esp_ble_mesh_prov_cb_param_t::ble_mesh_provisioner_stop_prov_t::flag (C++ member), 398
esp_ble_mesh_prov_cb_param_t::ble_mesh_provisioner_stop_prov_t::provisioner_stop_reason (C++ member), 398
esp_ble_mesh_prov_cb_param_t::ble_mesh_set_oob_pub_key_comp_t (C++ struct), 398
esp_ble_mesh_prov_cb_param_t::ble_mesh_set_oob_pub_key_comp_t::status (C++ member), 398
esp_ble_mesh_prov_cb_param_t::ble_mesh_set_unprov_dev_name_comp_t (C++ struct), 399
esp_ble_mesh_prov_cb_param_t::ble_mesh_set_unprov_dev_name_comp_t::err_code (C++ member), 399
esp_ble_mesh_prov_cb_param_t::ble_mesh_set_unprov_dev_name_comp_t::status (C++ member), 399
esp_ble_mesh_prov_cb_param_t::ble_mesh_unprov_beacon_recv_t (C++ struct), 399
esp_ble_mesh_prov_cb_param_t::ble_mesh_unprov_beacon_recv_t::oob_info (C++ member), 399
esp_ble_mesh_prov_cb_param_t::ble_mesh_unprov_beacon_recv_t::oob_type (C++ member), 399
esp_ble_mesh_prov_cb_param_t::ble_mesh_unprov_beacon_recv_t::uri_hash (C++ member), 399
esp_ble_mesh_prov_cb_param_t::ble_mesh_unprov_beacon_recv_t::uri_hash_present (C++ member), 399
esp_ble_mesh_prov_cb_param_t::ble_mesh_unprov_beacon_recv_t::uuid (C++ member), 399
esp_ble_mesh_prov_cb_param_t::ble_mesh_unprov_dev_add_t (C++ struct), 399
esp_ble_mesh_prov_cb_param_t::ble_mesh_unprov_dev_add_t::addr (C++ member), 399
esp_ble_mesh_prov_cb_param_t::ble_mesh_unprov_dev_add_t::addr_type (C++ member), 399
esp_ble_mesh_prov_cb_param_t::ble_mesh_unprov_dev_add_t::dev_uuid (C++ member), 399
esp_ble_mesh_prov_cb_param_t::ble_mesh_unprov_dev_add_t::flag (C++ member), 399
esp_ble_mesh_prov_cb_param_t::ble_mesh_unprov_dev_add_t::nppi (C++ member), 399
esp_ble_mesh_prov_cb_param_t::ble_mesh_unprov_dev_add_t::oob_info (C++ member), 399
esp_ble_mesh_prov_cb_param_t::ble_mesh_unprov_dev_add_t::oob_type (C++ member), 399
esp_ble_mesh_prov_cb_param_t::ble_mesh_unprov_dev_add_t::unicast (C++ member), 399
esp_ble_mesh_prov_cb_param_t::ble_mesh_unprov_dev_add_t::uri_hash (C++ member), 399
esp_ble_mesh_prov_cb_param_t::ble_mesh_unprov_dev_add_t::uri_hash_present (C++ member), 399
esp_ble_mesh_prov_cb_param_t::ble_mesh_unprov_dev_add_t::uuid (C++ member), 399
esp_ble_mesh_prov_cb_param_t::ble_mesh_unprov_dev_reset_t (C++ struct), 399
esp_ble_mesh_prov_cb_param_t::ble_mesh_unprov_dev_reset_t::addr (C++ member), 399
esp_ble_mesh_prov_cb_param_t::ble_mesh_unprov_dev_reset_t::addr_type (C++ member), 399
esp_ble_mesh_prov_cb_param_t::ble_mesh_unprov_dev_reset_t::node_index (C++ member), 399
esp_ble_mesh_prov_cb_param_t::ble_mesh_unprov_dev_reset_t::reason (C++ member), 399
esp_ble_mesh_prov_cb_param_t::ble_mesh_unprov_dev_reset_t::uuid (C++ member), 399
esp_ble_mesh_prov_cb_param_t::ble_mesh_unprov_dev_reset_t::uuid_match (C++ member), 399
esp_ble_mesh_prov_cb_param_t::ble_mesh_unprov_dev_reset_t::uuid_match_len (C++ member), 400
esp_ble_mesh_prov_cb_param_t::ble_mesh_unprov_dev_reset_t::uuid_match_offset (C++ member), 400
esp_ble_mesh_prov_cb_param_t::ble_mesh_unprov_dev_reset_t::uuid_match_prov_after_match (C++ member), 400
esp_ble_mesh_prov_cb_param_t::ble_mesh_unprov_dev_reset_t::uuid_match_set (C++ member), 400
esp_ble_mesh_prov_cb_param_t::ble_mesh_unprov_dev_reset_t::uuid_match_set_flag (C++ member), 400
esp_ble_mesh_prov_cb_param_t::ble_mesh_unprov_dev_reset_t::uuid_match_set_flag_bit (C++ member), 400
esp_ble_mesh_prov_cb_param_t::ble_mesh_unprov_dev_reset_t::uuid_match_set_flag_bit_offset (C++ member), 400
esp_ble_mesh_prov_cb_param_t::ble_mesh_unprov_dev_reset_t::uuid_match_set_flag_bit_offset_len (C++ member), 400
esp_ble_mesh_prov_cb_param_t::ble_mesh_unprov_dev_reset_t::uuid_match_set_flag_bit_offset_len_offset (C++ member), 400
esp_ble_mesh_prov_cb_param_t::ble_mesh_unprov_dev_reset_t::uuid_match_set_flag_bit_offset_len_offset_len (C++ member), 400
esp_ble_mesh_prov_cb_param_t::ble_mesh_unprov_dev_reset_t::uuid_match_set_flag_bit_offset_len_offset_len_offset (C++ member), 400
esp_ble_mesh_prov_cb_param_t::ble_mesh_unprov_dev_reset_t::uuid_match_set_flag_bit_offset_len_offset_len_offset_len (C++ member), 400
esp_ble_mesh_prov_cb_param_t::ble_mesh_unprov_dev_reset_t::uuid_match_set_flag_bit_offset_len_offset_len_offset_len_offset (C++ member), 400
esp_ble_mesh_prov_cb_param_t::ble_mesh_unprov_dev_reset_t::uuid_match_set_flag_bit_offset_len_offset_len_offset_len_offset_len (C++ member), 400
esp_ble_mesh_prov_cb_param_t::ble_mesh_unprov_dev_reset_t::uuid_match_set_flag_bit_offset_len_offset_len_offset_len_offset_len_offset (C++ member), 400
esp_ble_mesh_prov_cb_param_t::ble_mesh_unprov_dev_reset_t::uuid_match_set_flag_bit_offset_len_offset_len_offset_len_offset_len_offset_len (C++ member), 400
esp_ble_mesh_prov_cb_param_t::ble_mesh_unprov_dev_reset_t::uuid_match_set_flag_bit_offset_len_offset_len_offset_len_offset_len_offset_len_offset (C++ member), 400
esp_ble_mesh_prov_cb_param_t::ble_mesh_unprov_dev_reset_t::uuid_match_set_flag_bit_offset_len_offset_len_offset_len_offset_len_offset_len_offset_len (C++ member), 400
esp_ble_mesh_prov_cb_param_t::ble_mesh_unprov_dev_reset_t::uuid_match_set_flag_bit_offset_len_offset_len_offset_len_offset_len_offset_len_offset_len_offset (C++ member), 400
esp_ble_mesh_prov_cb_param_t::ble_mesh_unprov_dev_reset_t::uuid_match_set_flag_bit_offset_len_offset_len_offset_len_offset_len_offset_len_offset_len_offset_len (C++ member), 400
esp_ble_mesh_prov_cb_param_t::ble_mesh_unprov_dev_reset_t::uuid_match_set_flag_bit_offset_len_offset_len_offset_len_offset_len_offset_len_offset_len_offset_len_offset (C++ member), 400
esp_ble_mesh_prov_cb_param_t::ble_mesh_unprov_dev_reset_t::uuid_match_set_flag_bit_offset_len_offset_len_offset_len_offset_len_offset_len_offset_len_offset_len_offset_len (C++ member), 400
esp_ble_mesh_prov_cb_param_t::ble_mesh_unprov_dev_reset_t::uuid_match_set_flag_bit_offset_len_offset_len_offset_len_offset_len_offset_len_offset_len_offset_len_offset_len_offset (C++ member), 400
esp_ble_mesh_prov_cb_param_t::ble_mesh_unprov_dev_reset_t::uuid_match_set_flag_bit_offset_len_offset_len_offset_len_offset_len_offset_len_offset_len_offset_len_offset_len_offset_len (C++ member), 400
esp_ble_mesh_prov_cb_param_t::ble_mesh_unprov_dev_reset_t::uuid_match_set_flag_bit_offset_len_offset_len_offset_len_offset_len_offset_len_offset_len_offset_len_offset_len_offset_len_offset (C++ member), 400
esp_ble_mesh_prov_cb_param_t::ble_mesh_unprov_dev_reset_t::uuid_match_set_flag_bit_offset_len_offset_len_offset_len_offset_len_offset_len_offset_len_offset_len_offset_len_offset_len_offset_len (C++ member), 400
esp_ble_mesh_prov_cb_param_t::ble_mesh_unprov_dev_reset_t::uuid_match_set_flag_bit_offset_len_offset_len_offset_len_offset_len_offset_len_offset_len_offset_len_offset_len_offset_len_offset_len_offset (C++ member), 400
esp_ble_mesh_prov_cb_param_t::ble_mesh_unprov_dev_reset_t::uuid_match_set_flag_bit_offset_len_offset_len_offset_len_offset_len_offset_len_offset_len_offset_len_offset_len_offset_len_offset_len_offset_len (C++ member), 400
esp_ble_mesh_prov_cb_param_t::ble_mesh_unprov_dev_reset_t::uuid_match_set_flag_bit_offset_len_offset_len_offset_len_offset_len_offset_len_offset_len_offset_len_offset_len_offset_len_offset_len_offset_len_offset (C++ member), 400
esp_ble_mesh_prov_cb_param_t::ble_mesh_unprov_dev_reset_t::uuid_match_set_flag_bit_offset_len_offset_len_offset_len_offset_len_offset_len_offset_len_offset_len_offset_len_offset_len_offset_len_offset_len_offset_len (C++ member), 400
esp_ble_mesh_prov_cb_param_t::ble_mesh_unprov_dev_reset_t::uuid_match_set_flag_bit_offset_len_offset_len_offset_len_offset_len_offset_len_offset_len_offset_len_offset_len_offset_len_offset_len_offset_len_offset_len_offset

esp_ble_mesh_prov_cb_param_t::ble_mesh_esp_ble_mesh_prov_output_param_t::num_provisioner
(C++ member), 402
esp_ble_mesh_prov_cb_param_t::ble_mesh_esp_ble_mesh_prov_output_param_t::num_provisioner
(C++ member), 402
esp_ble_mesh_prov_cb_param_t::ble_mesh_esp_ble_mesh_prov_output_param_t::oob_size_provisioner
(C++ member), 402
esp_ble_mesh_prov_cb_param_t::ble_mesh_esp_ble_mesh_prov_output_param_t::output_num_provisioner
(C++ member), 402
esp_ble_mesh_prov_cb_param_t::ble_mesh_esp_ble_mesh_prov_output_param_t::output_size_provisioner
(C++ member), 402
esp_ble_mesh_prov_cb_param_t::ble_mesh_esp_ble_mesh_prov_read_oob_pub_key_param_t::key_provisioner
(C++ struct), 403
esp_ble_mesh_prov_cb_param_t::ble_mesh_esp_ble_mesh_prov_read_oob_pub_key_param_t::key_provisioner
(C++ member), 403
esp_ble_mesh_prov_cb_param_t::ble_mesh_esp_ble_mesh_prov_read_oob_pub_key_param_t::key_provisioner
(C++ struct), 403
esp_ble_mesh_prov_cb_param_t::ble_mesh_esp_ble_mesh_prov_read_oob_pub_key_param_t::key_provisioner
(C++ member), 403
esp_ble_mesh_prov_cb_param_t::ble_mesh_esp_ble_mesh_rpr_prov_link_param_t::pkt_type_mesh_proxy_client
(C++ struct), 403
esp_ble_mesh_prov_cb_param_t::ble_mesh_esp_ble_mesh_rpr_prov_link_param_t::pkt_type_mesh_proxy_client
(C++ member), 403
esp_ble_mesh_prov_cb_param_t::ble_mesh_esp_ble_mesh_rpr_prov_link_param_t::pkt_type_mesh_proxy_type
(C++ member), 403
esp_ble_mesh_prov_cb_param_t::ble_mesh_esp_ble_mesh_rpr_prov_link_param_t::pkt_type_mesh_proxy_type
(C++ member), 403
esp_ble_mesh_prov_cb_param_t::ble_mesh_esp_ble_mesh_rpr_prov_link_param_t::pkt_type_mesh_provision_client
(C++ member), 403
esp_ble_mesh_prov_cb_param_t::ble_mesh_esp_ble_mesh_rpr_prov_link_param_t::pkt_type_mesh_provision_client
(C++ struct), 405
esp_ble_mesh_prov_cb_param_t::ble_mesh_esp_ble_mesh_rpr_prov_link_param_t::pkt_type_mesh_provision_client
(C++ member), 403
esp_ble_mesh_prov_cb_param_t::ble_mesh_esp_ble_mesh_rpr_prov_link_param_t::pkt_type_mesh_provision_client
(C++ member), 406
esp_ble_mesh_prov_cb_param_t::ble_mesh_esp_ble_mesh_rpr_prov_link_param_t::pkt_type_mesh_proxy_info
(C++ member), 403
(C++ member), 406
esp_ble_mesh_prov_cb_param_t::ble_mesh_esp_ble_mesh_rpr_prov_link_param_t::pkt_type_mesh_proxy_client
(C++ member), 403
(C++ member), 406
esp_ble_mesh_prov_cb_param_t::ble_mesh_esp_ble_mesh_set_oob_pub_key_param_t::ble_mesh_proxy_client
(C++ struct), 403
(C++ member), 406
esp_ble_mesh_prov_cb_param_t::ble_mesh_esp_ble_mesh_set_oob_pub_key_param_t::ble_mesh_proxy_client
(C++ member), 404
(C++ struct), 406
esp_ble_mesh_prov_cb_param_t::ble_mesh_esp_ble_mesh_set_node_name_param_t::mesh_proxy_client
(C++ struct), 404
(C++ member), 406
esp_ble_mesh_prov_cb_param_t::ble_mesh_esp_ble_mesh_set_node_name_param_t::proxy_client
(C++ member), 404
(C++ member), 406
esp_ble_mesh_prov_cb_param_t::ble_mesh_esp_ble_mesh_set_node_name_param_t::proxy_info
(C++ member), 404
(C++ member), 406
esp_ble_mesh_prov_cb_param_t::ble_mesh_esp_ble_mesh_set_prov_dev_param_t::add_mesh_proxy_client
(C++ struct), 404
(C++ member), 406
esp_ble_mesh_prov_cb_param_t::ble_mesh_esp_ble_mesh_set_prov_dev_param_t::add_mesh_proxy_client
(C++ member), 404
(C++ struct), 406
esp_ble_mesh_prov_cb_param_t::ble_mesh_esp_ble_mesh_set_prov_dev_param_t::ble_mesh_proxy_client
(C++ struct), 404
(C++ member), 406
esp_ble_mesh_prov_cb_param_t::ble_mesh_esp_ble_mesh_set_prov_dev_param_t::ble_mesh_proxy_client
(C++ member), 404
(C++ member), 406
esp_ble_mesh_prov_cb_param_t::ble_mesh_esp_ble_mesh_set_static_oob_value_param_t::ble_mesh_proxy_client
(C++ struct), 404
(C++ struct), 406
esp_ble_mesh_prov_cb_param_t::ble_mesh_esp_ble_mesh_set_static_oob_value_param_t::ble_mesh_proxy_client
(C++ member), 404
(C++ member), 407
esp_ble_mesh_prov_cb_param_t::ble_mesh_esp_ble_mesh_store_node_comp_data_param_t::mesh_proxy_client
(C++ struct), 404
(C++ member), 407

esp_ble_mesh_prov_cb_param_t::ble_mesh_proxy_client_recv_adv_pkt_param (*C++ member*), 407
esp_ble_mesh_prov_cb_param_t::ble_mesh_proxy_client_recv_adv_pkt_param::addr (*C++ member*), 407
esp_ble_mesh_prov_cb_param_t::ble_mesh_proxy_client_recv_adv_pkt_param::addr_type (*C++ member*), 407
esp_ble_mesh_prov_cb_param_t::ble_mesh_proxy_client_recv_adv_pkt_param::adv_type (*C++ member*), 407
esp_ble_mesh_prov_cb_param_t::ble_mesh_proxy_client_recv_adv_pkt_param::net_idx (*C++ member*), 407
esp_ble_mesh_prov_cb_param_t::ble_mesh_proxy_client_recv_adv_pkt_param::rssi (*C++ member*), 407
esp_ble_mesh_prov_cb_param_t::ble_mesh_proxy_client_recv_adv_pkt_param::service_data (*C++ member*), 407
esp_ble_mesh_prov_cb_param_t::ble_mesh_proxy_client_recv_adv_pkt_param::service_uuid (*C++ member*), 407
esp_ble_mesh_prov_cb_param_t::ble_mesh_proxy_client_recv_adv_pkt_param::service_uuid_len (*C++ member*), 407
esp_ble_mesh_prov_cb_param_t::ble_mesh_proxy_client_recv_adv_pkt_param::value (*C++ member*), 407
esp_ble_mesh_prov_cb_param_t::ble_mesh_proxy_client_recv_adv_pkt_param::value_len (*C++ member*), 407
esp_ble_mesh_prov_cb_param_t::ble_mesh_proxy_client_recv_filter_status_param (*C++ struct*), 407
esp_ble_mesh_prov_cb_param_t::ble_mesh_proxy_client_recv_filter_status_param::client_list_size (*C++ member*), 407
esp_ble_mesh_prov_cb_param_t::ble_mesh_proxy_client_recv_filter_status_param::conn_handle (*C++ member*), 407
esp_ble_mesh_prov_cb_param_t::ble_mesh_proxy_client_recv_filter_status_param::filter_type (*C++ member*), 408
esp_ble_mesh_prov_cb_param_t::ble_mesh_proxy_client_recv_filter_status_param::list_size (*C++ member*), 408
esp_ble_mesh_prov_cb_param_t::ble_mesh_proxy_client_recv_filter_status_param::net_idx (*C++ member*), 407
esp_ble_mesh_prov_cb_param_t::ble_mesh_proxy_client_recv_filter_status_param::server_opcode (*C++ member*), 407
esp_ble_mesh_prov_cb_param_t::ble_mesh_proxy_client_removed_filter_addr_param (*C++ struct*), 408
esp_ble_mesh_prov_cb_param_t::ble_mesh_proxy_client_removed_filter_addr_param::addr (*C++ member*), 408
esp_ble_mesh_prov_cb_param_t::ble_mesh_proxy_client_removed_filter_addr_param::conn_handle (*C++ member*), 408
esp_ble_mesh_prov_cb_param_t::ble_mesh_proxy_client_removed_filter_addr_param::err_code (*C++ member*), 408
esp_ble_mesh_prov_cb_param_t::ble_mesh_proxy_client_removed_filter_addr_param::net_idx (*C++ member*), 408
esp_ble_mesh_prov_cb_param_t::ble_mesh_proxy_server_adv_pkt_param (*C++ struct*), 408
esp_ble_mesh_prov_cb_param_t::ble_mesh_proxy_server_adv_pkt_param::addr (*C++ member*), 408
esp_ble_mesh_prov_cb_param_t::ble_mesh_proxy_server_adv_pkt_param::addr_type (*C++ member*), 408
esp_ble_mesh_prov_cb_param_t::ble_mesh_proxy_server_adv_pkt_param::adv_type (*C++ member*), 408
esp_ble_mesh_prov_cb_param_t::ble_mesh_proxy_server_adv_pkt_param::length (*C++ member*), 408
esp_ble_mesh_prov_cb_param_t::ble_mesh_proxy_server_adv_pkt_param::net_idx (*C++ member*), 408
esp_ble_mesh_prov_cb_param_t::ble_mesh_proxy_server_adv_pkt_param::rssi (*C++ member*), 408
esp_ble_mesh_prov_cb_param_t::ble_mesh_proxy_server_adv_pkt_param::service_data (*C++ member*), 408
esp_ble_mesh_prov_cb_param_t::ble_mesh_proxy_server_adv_pkt_param::service_uuid (*C++ member*), 408
esp_ble_mesh_prov_cb_param_t::ble_mesh_proxy_server_adv_pkt_param::service_uuid_len (*C++ member*), 408
esp_ble_mesh_prov_cb_param_t::ble_mesh_proxy_server_adv_pkt_param::value (*C++ member*), 408
esp_ble_mesh_prov_cb_param_t::ble_mesh_proxy_server_adv_pkt_param::value_len (*C++ member*), 408
esp_ble_mesh_prov_cb_param_t::ble_mesh_proxy_server_connected_param (*C++ struct*), 408
esp_ble_mesh_prov_cb_param_t::ble_mesh_proxy_server_connected_param::conn_handle (*C++ member*), 408
esp_ble_mesh_prov_cb_param_t::ble_mesh_proxy_server_connected_param::net_idx (*C++ member*), 408
esp_ble_mesh_prov_cb_param_t::ble_mesh_proxy_server_disconnected_param (*C++ struct*), 408
esp_ble_mesh_prov_cb_param_t::ble_mesh_proxy_server_disconnected_param::conn_handle (*C++ member*), 408
esp_ble_mesh_prov_cb_param_t::ble_mesh_proxy_server_disconnected_param::net_idx (*C++ member*), 408
esp_ble_mesh_prov_cb_param_t::ble_mesh_proxy_server_disconnected_param::reason (*C++ member*), 408
esp_ble_mesh_prov_cb_param_t::ble_mesh_provisioner_add_unprov_dev_comp_param (*C++ struct*), 408
esp_ble_mesh_prov_cb_param_t::ble_mesh_provisioner_add_unprov_dev_comp_param::err_code (*C++ member*), 408
esp_ble_mesh_prov_cb_param_t::ble_mesh_provisioner_add_unprov_dev_comp_param::node_idx (*C++ member*), 409
esp_ble_mesh_prov_cb_param_t::ble_mesh_provisioner_add_unprov_dev_comp_param::oob_info (*C++ member*), 409
esp_ble_mesh_prov_cb_param_t::ble_mesh_provisioner_add_unprov_dev_comp_param::source (*C++ member*), 409
esp_ble_mesh_prov_cb_param_t::ble_mesh_provisioner_delete_dev_comp_param (*C++ struct*), 409
esp_ble_mesh_prov_cb_param_t::ble_mesh_provisioner_delete_dev_comp_param::err_code (*C++ member*), 409
esp_ble_mesh_prov_cb_param_t::ble_mesh_provisioner_delete_dev_comp_param::flag (*C++ member*), 409
esp_ble_mesh_prov_cb_param_t::ble_mesh_provisioner_delete_dev_comp_param::net_idx (*C++ member*), 409
esp_ble_mesh_prov_cb_param_t::ble_mesh_provisioner_delete_dev_comp_param::node_num (*C++ member*), 409
esp_ble_mesh_prov_cb_param_t::ble_mesh_provisioner_delete_dev_comp_param::nodes (*C++ member*), 409
esp_ble_mesh_prov_cb_param_t::ble_mesh_provisioner_prov_complete_param (*C++ struct*), 409
esp_ble_mesh_prov_cb_param_t::ble_mesh_provisioner_prov_complete_param::addr (*C++ member*), 409
esp_ble_mesh_prov_cb_param_t::ble_mesh_provisioner_prov_complete_param::dev_type (*C++ member*), 409
esp_ble_mesh_prov_cb_param_t::ble_mesh_provisioner_prov_complete_param::flags (*C++ member*), 409
esp_ble_mesh_prov_cb_param_t::ble_mesh_provisioner_prov_complete_param::iv_index (*C++ member*), 409
esp_ble_mesh_prov_cb_param_t::ble_mesh_provisioner_prov_complete_param::net_idx (*C++ member*), 409
esp_ble_mesh_prov_cb_param_t::ble_mesh_provisioner_prov_complete_param::node_idx (*C++ member*), 409
esp_ble_mesh_prov_cb_param_t::ble_mesh_provisioner_prov_disable_comp_param (*C++ struct*), 409
esp_ble_mesh_prov_cb_param_t::ble_mesh_provisioner_prov_disable_comp_param::err_code (*C++ member*), 409
esp_ble_mesh_prov_cb_param_t::ble_mesh_provisioner_prov_enable_comp_param (*C++ struct*), 409
esp_ble_mesh_prov_cb_param_t::ble_mesh_provisioner_prov_enable_comp_param::err_code (*C++ member*), 409

esp_ble_mesh_prov_cb_param_t::lpn_friendship_establish_comp (C++ member), 390
esp_ble_mesh_prov_cb_param_t::lpn_friendship_terminate_comp (C++ member), 390
esp_ble_mesh_prov_cb_param_t::lpn_poll_comp (C++ member), 390
esp_ble_mesh_prov_cb_param_t::model_sub_add_comp (C++ member), 391
esp_ble_mesh_prov_cb_param_t::model_unsub_group_addr_comp (C++ member), 392
esp_ble_mesh_prov_cb_param_t::node_add_app_key_comp (C++ member), 385
esp_ble_mesh_prov_cb_param_t::node_add_net_key_comp (C++ member), 385
esp_ble_mesh_prov_cb_param_t::node_bind_app_key_to_model_comp (C++ member), 385
esp_ble_mesh_prov_cb_param_t::node_prov_complete (C++ member), 385
esp_ble_mesh_prov_cb_param_t::node_prov_disable_comp (C++ member), 384
esp_ble_mesh_prov_cb_param_t::node_prov_enable_comp (C++ member), 384
esp_ble_mesh_prov_cb_param_t::node_prov_input (C++ member), 385
esp_ble_mesh_prov_cb_param_t::node_prov_input_num_comp (C++ member), 385
esp_ble_mesh_prov_cb_param_t::node_prov_input_str_comp (C++ member), 385
esp_ble_mesh_prov_cb_param_t::node_prov_link_close (C++ member), 384
esp_ble_mesh_prov_cb_param_t::node_prov_link_open (C++ member), 384
esp_ble_mesh_prov_cb_param_t::node_prov_output_num (C++ member), 385
esp_ble_mesh_prov_cb_param_t::node_prov_output_str (C++ member), 385
esp_ble_mesh_prov_cb_param_t::node_prov_reset (C++ member), 385
esp_ble_mesh_prov_cb_param_t::node_prov_set_node_name_comp (C++ member), 384
esp_ble_mesh_prov_cb_param_t::op (C++ member), 388
esp_ble_mesh_prov_cb_param_t::prov_register_comp (C++ member), 384
esp_ble_mesh_prov_cb_param_t::provisioner_add_app_key_comp (C++ member), 387
esp_ble_mesh_prov_cb_param_t::provisioner_add_local_app_key_comp (C++ member), 387
esp_ble_mesh_prov_cb_param_t::provisioner_add_local_net_key_comp (C++ member), 386
esp_ble_mesh_prov_cb_param_t::provisioner_add_net_key_comp (C++ member), 387
esp_ble_mesh_prov_cb_param_t::provisioner_add_unprov_dev_comp (C++ member), 386
esp_ble_mesh_prov_cb_param_t::provisioner_bind_app_key_to_model_comp (C++ member), 387
esp_ble_mesh_prov_cb_param_t::provisioner_close_stream_comp (C++ member), 389
esp_ble_mesh_prov_cb_param_t::provisioner_close_stream_ind (C++ member), 390
esp_ble_mesh_prov_cb_param_t::provisioner_delete_dev_comp (C++ member), 386
esp_ble_mesh_prov_cb_param_t::provisioner_delete_local_app_key_comp (C++ member), 388
esp_ble_mesh_prov_cb_param_t::provisioner_delete_local_net_key_comp (C++ member), 388
esp_ble_mesh_prov_cb_param_t::provisioner_delete_node_with_addr_comp (C++ member), 388
esp_ble_mesh_prov_cb_param_t::provisioner_delete_node_with_uuid_comp (C++ member), 390
esp_ble_mesh_prov_cb_param_t::provisioner_direct_bind_app_key_to_model_comp (C++ member), 389
esp_ble_mesh_prov_cb_param_t::provisioner_enable_comp (C++ member), 388
esp_ble_mesh_prov_cb_param_t::provisioner_open_stream_comp (C++ member), 389
esp_ble_mesh_prov_cb_param_t::provisioner_open_stream_ind (C++ member), 389
esp_ble_mesh_prov_cb_param_t::provisioner_prov_complete (C++ member), 386
esp_ble_mesh_prov_cb_param_t::provisioner_prov_delete_comp (C++ member), 386
esp_ble_mesh_prov_cb_param_t::provisioner_prov_disable_comp (C++ member), 386
esp_ble_mesh_prov_cb_param_t::provisioner_prov_enable_comp (C++ member), 386
esp_ble_mesh_prov_cb_param_t::provisioner_prov_input (C++ member), 386
esp_ble_mesh_prov_cb_param_t::provisioner_prov_input_num (C++ member), 386
esp_ble_mesh_prov_cb_param_t::provisioner_prov_input_str (C++ member), 387
esp_ble_mesh_prov_cb_param_t::provisioner_prov_read_oob_pub_key_comp (C++ member), 386
esp_ble_mesh_prov_cb_param_t::provisioner_prov_set_dev_uuid_match_comp (C++ member), 386
esp_ble_mesh_prov_cb_param_t::provisioner_prov_set_node_name_comp (C++ member), 387
esp_ble_mesh_prov_cb_param_t::provisioner_recv_heartbeat (C++ member), 389
esp_ble_mesh_prov_cb_param_t::provisioner_recv_unprov_adv_pkt (C++ member), 386
esp_ble_mesh_prov_cb_param_t::provisioner_set_dev_uuid_match_comp (C++ member), 386
esp_ble_mesh_prov_cb_param_t::provisioner_set_heartbeat_filter_comp (C++ member), 389
esp_ble_mesh_prov_cb_param_t::provisioner_set_heartbeat_filter_comp (C++ member), 388

esp_ble_mesh_prov_cb_param_t::provisioner_set_node_name_comp_param (*C++ member*), 420
esp_ble_mesh_prov_cb_param_t::provisioner_set_oob_pub_key_comp_param (*C++ member*), 387
esp_ble_mesh_prov_cb_param_t::provisioner_set_static_oob_val_comp_param (*C++ member*), 387
esp_ble_mesh_prov_cb_param_t::provisioner_store_node_comp_data_comp_param (*C++ member*), 387
esp_ble_mesh_prov_cb_param_t::provisioner_update_comp_param (*C++ member*), 387
esp_ble_mesh_prov_cb_param_t::provisioner_update_net_key_comp_param (*C++ member*), 387
esp_ble_mesh_prov_cb_param_t::proxy_client_add_filter_comp_param (*C++ member*), 391
esp_ble_mesh_prov_cb_param_t::proxy_client_connect_comp_param (*C++ member*), 391
esp_ble_mesh_prov_cb_param_t::proxy_client_disconnect_comp_param (*C++ member*), 391
esp_ble_mesh_prov_cb_param_t::proxy_client_recv_adv_pkt_param (*C++ member*), 391
esp_ble_mesh_prov_cb_param_t::proxy_client_recv_filter_status_param (*C++ member*), 391
esp_ble_mesh_prov_cb_param_t::proxy_client_set_filter_type_comp_param (*C++ member*), 391
esp_ble_mesh_prov_cb_param_t::proxy_server_connected_param (*C++ member*), 391
esp_ble_mesh_prov_cb_param_t::proxy_server_disconnected_param (*C++ member*), 391
esp_ble_mesh_prov_cb_param_t::rssi (*C++ member*), 389
esp_ble_mesh_prov_cb_param_t::rx_ttl (*C++ member*), 389
esp_ble_mesh_prov_cb_param_t::set_fast_prov_action_comp_param (*C++ member*), 390
esp_ble_mesh_prov_cb_param_t::set_fast_prov_info_comp_param (*C++ member*), 390
esp_ble_mesh_prov_cb_param_t::type (*C++ member*), 388
esp_ble_mesh_prov_cb_param_t::uid (*C++ member*), 389
esp_ble_mesh_prov_cb_t (*C++ type*), 477
esp_ble_mesh_prov_data_info_t (*C++ struct*), 420
esp_ble_mesh_prov_data_info_t::flag (*C++ member*), 420
esp_ble_mesh_prov_data_info_t::flags (*C++ member*), 420
esp_ble_mesh_prov_data_info_t::iv_index (*C++ member*), 420
esp_ble_mesh_prov_data_info_t::net_idx (*C++ member*), 420
ESP_BLE_MESH_PROV_INPUT_OOB_MAX_LEN (*C macro*), 429
esp_ble_mesh_prov_oob_info_t (*C++ enum*), 451
esp_ble_mesh_prov_oob_info_t::ESP_BLE_MESH_PROV_OOB_ALPHA (*C++ enumerator*), 451
esp_ble_mesh_prov_oob_info_t::ESP_BLE_MESH_PROV_OOB_BLINK (*C++ enumerator*), 451
esp_ble_mesh_prov_oob_info_t::ESP_BLE_MESH_PROV_OOB_BOX (*C++ enumerator*), 451
esp_ble_mesh_prov_oob_info_t::ESP_BLE_MESH_PROV_OOB_DIAL (*C++ enumerator*), 452
esp_ble_mesh_prov_oob_info_t::ESP_BLE_MESH_PROV_OOB_DISPLAY (*C++ enumerator*), 451
esp_ble_mesh_prov_oob_info_t::ESP_BLE_MESH_PROV_OOB_ENTER (*C++ enumerator*), 451
esp_ble_mesh_prov_oob_info_t::ESP_BLE_MESH_PROV_OOB_FLASH (*C++ enumerator*), 452
esp_ble_mesh_prov_oob_info_t::ESP_BLE_MESH_PROV_OOB_KEYPAD (*C++ enumerator*), 452
esp_ble_mesh_prov_oob_info_t::ESP_BLE_MESH_PROV_OOB_MOVE (*C++ enumerator*), 451
esp_ble_mesh_prov_oob_info_t::ESP_BLE_MESH_PROV_OOB_NUMBER (*C++ enumerator*), 451
esp_ble_mesh_prov_oob_info_t::ESP_BLE_MESH_PROV_OOB_OTHER (*C++ enumerator*), 451
esp_ble_mesh_prov_oob_info_t::ESP_BLE_MESH_PROV_OOB_PUSH (*C++ enumerator*), 451
esp_ble_mesh_prov_oob_info_t::ESP_BLE_MESH_PROV_OOB_STRING (*C++ enumerator*), 451
ESP_BLE_MESH_PROV_OUTPUT_OOB_MAX_LEN (*C macro*), 428
ESP_BLE_MESH_PROV_STATIC_OOB_MAX_LEN (*C macro*), 428
esp_ble_mesh_prov_t (*C++ struct*), 419
esp_ble_mesh_provisioner_add_local_app_key (*C++ function*), 467
esp_ble_mesh_provisioner_add_local_net_key (*C++ function*), 468
esp_ble_mesh_provisioner_add_unprov_dev (*C++ function*), 474
esp_ble_mesh_provisioner_bind_app_key_to_local_mo (*C++ function*), 468
esp_ble_mesh_provisioner_close_settings_with_inde (*C++ function*), 470
esp_ble_mesh_provisioner_close_settings_with_uid (*C++ function*), 470
esp_ble_mesh_provisioner_delete_dev (*C++ function*), 475
esp_ble_mesh_provisioner_delete_node_with_addr (*C++ function*), 467
esp_ble_mesh_provisioner_delete_node_with_uuid (*C++ function*), 467
esp_ble_mesh_provisioner_delete_settings_with_ind (*C++ function*), 471
esp_ble_mesh_provisioner_delete_settings_with_uid (*C++ function*), 471
esp_ble_mesh_provisioner_direct_erase_settings (*C++ function*), 469

esp_ble_mesh_provisioner_get_free_settings_count (C++ function), 471
esp_ble_mesh_provisioner_get_local_app_key (C++ function), 467
esp_ble_mesh_provisioner_get_local_net_key (C++ function), 468
esp_ble_mesh_provisioner_get_node_index (C++ function), 466
esp_ble_mesh_provisioner_get_node_name (C++ function), 466
esp_ble_mesh_provisioner_get_node_table_entry (C++ function), 467
esp_ble_mesh_provisioner_get_node_with_addr (C++ function), 466
esp_ble_mesh_provisioner_get_node_with_name (C++ function), 466
esp_ble_mesh_provisioner_get_node_with_uuid (C++ function), 466
esp_ble_mesh_provisioner_get_prov_node_count (C++ function), 466
esp_ble_mesh_provisioner_get_settings_index (C++ function), 471
esp_ble_mesh_provisioner_get_settings_uuid (C++ function), 471
esp_ble_mesh_provisioner_input_number (C++ function), 473
esp_ble_mesh_provisioner_input_string (C++ function), 473
esp_ble_mesh_provisioner_open_settings_with_index (C++ function), 470
esp_ble_mesh_provisioner_open_settings_with_uuid (C++ function), 470
esp_ble_mesh_provisioner_prov_device_with_addr (C++ function), 475
esp_ble_mesh_provisioner_prov_disable (C++ function), 474
esp_ble_mesh_provisioner_prov_enable (C++ function), 473
esp_ble_mesh_provisioner_read_oob_pub_key (C++ function), 473
esp_ble_mesh_provisioner_recv_heartbeat (C++ function), 468
esp_ble_mesh_provisioner_set_dev_uuid_match (C++ function), 475
esp_ble_mesh_provisioner_set_heartbeat_filter_info (C++ function), 469
esp_ble_mesh_provisioner_set_heartbeat_filter_type (C++ function), 469
esp_ble_mesh_provisioner_set_node_name (C++ function), 466
esp_ble_mesh_provisioner_set_primary_elem_addr (C++ function), 476
esp_ble_mesh_provisioner_set_prov_data_info (C++ function), 476
esp_ble_mesh_provisioner_set_static_oob_value (C++ function), 476
esp_ble_mesh_provisioner_store_node_comp_data (C++ function), 466
esp_ble_mesh_provisioner_update_local_app_key (C++ function), 467
esp_ble_mesh_provisioner_update_local_net_key (C++ function), 468
esp_ble_mesh_proxy_client_add_filter_addr (C++ function), 478
esp_ble_mesh_proxy_client_connect (C++ function), 477
esp_ble_mesh_proxy_client_disconnect (C++ function), 478
esp_ble_mesh_proxy_client_remove_filter_addr (C++ function), 478
esp_ble_mesh_proxy_client_set_filter_type (C++ function), 478
esp_ble_mesh_proxy_filter_type_t (C++ enum), 452
esp_ble_mesh_proxy_filter_type_t::PROXY_FILTER_BL (C++ enumerator), 452
esp_ble_mesh_proxy_filter_type_t::PROXY_FILTER_WH (C++ enumerator), 452
esp_ble_mesh_proxy_gatt_disable (C++ function), 477
esp_ble_mesh_proxy_gatt_enable (C++ function), 477
esp_ble_mesh_proxy_identity_enable (C++ function), 477
ESP_BLE_MESH_PUBLISH_TRANSMIT (C macro), 428
esp_ble_mesh_register_config_client_callback (C++ function), 479
esp_ble_mesh_register_config_server_callback (C++ function), 479
esp_ble_mesh_register_custom_model_callback (C++ function), 463
esp_ble_mesh_register_generic_client_callback (C++ function), 521
esp_ble_mesh_register_generic_server_callback (C++ function), 522
esp_ble_mesh_register_health_client_callback (C++ function), 510
esp_ble_mesh_register_health_server_callback (C++ function), 510
esp_ble_mesh_register_light_client_callback (C++ function), 610
esp_ble_mesh_register_lighting_server_callback (C++ function), 610
esp_ble_mesh_register_prov_callback (C++ function), 472
esp_ble_mesh_register_sensor_client_callback (C++ function), 561
esp_ble_mesh_register_sensor_server_callback (C++ function), 562
esp_ble_mesh_register_time_scene_client_callback (C++ function), 581
esp_ble_mesh_register_time_scene_server_callback (C++ function), 582
ESP_BLE_MESH_RELAY_DISABLED (C macro), 426

ESP_BLE_MESH_RELAY_ENABLED (*C macro*), 426
ESP_BLE_MESH_RELAY_NOT_SUPPORTED (*C macro*), 427
esp_ble_mesh_scene_delete_t (*C++ struct*), 587
esp_ble_mesh_scene_delete_t::scene_number (*C++ member*), 588
ESP_BLE_MESH_SCENE_NOT_FOUND (*C macro*), 608
ESP_BLE_MESH_SCENE_NUMBER_LEN (*C macro*), 607
esp_ble_mesh_scene_recall_t (*C++ struct*), 587
esp_ble_mesh_scene_recall_t::delay (*C++ member*), 587
esp_ble_mesh_scene_recall_t::op_en (*C++ member*), 587
esp_ble_mesh_scene_recall_t::scene_number (*C++ member*), 587
esp_ble_mesh_scene_recall_t::tid (*C++ member*), 587
esp_ble_mesh_scene_recall_t::trans_time (*C++ member*), 587
ESP_BLE_MESH_SCENE_REG_FULL (*C macro*), 608
esp_ble_mesh_scene_register_status_cb_t (*C++ struct*), 590
esp_ble_mesh_scene_register_status_cb_t::current_scene (*C++ member*), 591
esp_ble_mesh_scene_register_status_cb_t::scenes (*C++ member*), 591
esp_ble_mesh_scene_register_status_cb_t::status_code (*C++ member*), 591
esp_ble_mesh_scene_register_t (*C++ struct*), 593
esp_ble_mesh_scene_register_t::scene_number (*C++ member*), 594
esp_ble_mesh_scene_register_t::scene_type (*C++ member*), 594
esp_ble_mesh_scene_register_t::scene_value (*C++ member*), 594
esp_ble_mesh_scene_setup_srv_t (*C++ struct*), 595
esp_ble_mesh_scene_setup_srv_t::model (*C++ member*), 596
esp_ble_mesh_scene_setup_srv_t::rsp_ctrl (*C++ member*), 596
esp_ble_mesh_scene_setup_srv_t::state (*C++ member*), 596
esp_ble_mesh_scene_srv_t (*C++ struct*), 595
esp_ble_mesh_scene_srv_t::last (*C++ member*), 595
esp_ble_mesh_scene_srv_t::model (*C++ member*), 595
esp_ble_mesh_scene_srv_t::rsp_ctrl (*C++ member*), 595
esp_ble_mesh_scene_srv_t::state (*C++ member*), 595
esp_ble_mesh_scene_srv_t::transition (*C++ member*), 595
esp_ble_mesh_scene_status_cb_t (*C++ struct*), 590
esp_ble_mesh_scene_status_cb_t::current_scene (*C++ member*), 590
esp_ble_mesh_scene_status_cb_t::op_en (*C++ member*), 590
esp_ble_mesh_scene_status_cb_t::remain_time (*C++ member*), 590
esp_ble_mesh_scene_status_cb_t::status_code (*C++ member*), 590
esp_ble_mesh_scene_status_cb_t::target_scene (*C++ member*), 590
esp_ble_mesh_scene_store_t (*C++ struct*), 587
esp_ble_mesh_scene_store_t::scene_number (*C++ member*), 587
ESP_BLE_MESH_SCENE_SUCCESS (*C macro*), 608
esp_ble_mesh_scenes_state_t (*C++ struct*), 594
esp_ble_mesh_scenes_state_t::current_scene (*C++ member*), 594
esp_ble_mesh_scenes_state_t::in_progress (*C++ member*), 595
esp_ble_mesh_scenes_state_t::scene_count (*C++ member*), 594
esp_ble_mesh_scenes_state_t::scenes (*C++ member*), 594
esp_ble_mesh_scenes_state_t::status_code (*C++ member*), 595
esp_ble_mesh_scenes_state_t::target_scene (*C++ member*), 595
ESP_BLE_MESH_SCHEDULE_ACT_NO_ACTION (*C macro*), 608
ESP_BLE_MESH_SCHEDULE_ACT_SCENE_RECALL (*C macro*), 608
ESP_BLE_MESH_SCHEDULE_ACT_TURN_OFF (*C macro*), 608
ESP_BLE_MESH_SCHEDULE_ACT_TURN_ON (*C macro*), 608
ESP_BLE_MESH_SCHEDULE_DAY_ANY_DAY (*C macro*), 607
ESP_BLE_MESH_SCHEDULE_ENTRY_MAX_INDEX (*C macro*), 608
ESP_BLE_MESH_SCHEDULE_HOUR_ANY_HOUR (*C macro*), 607
ESP_BLE_MESH_SCHEDULE_HOUR_ONCE_A_DAY (*C macro*), 607
esp_ble_mesh_schedule_register_t (*C++ struct*), 596
esp_ble_mesh_schedule_register_t::action (*C++ member*), 596
esp_ble_mesh_schedule_register_t::day (*C++ member*), 596
esp_ble_mesh_schedule_register_t::day_of_week (*C++ member*), 596
esp_ble_mesh_schedule_register_t::hour

(C++ *member*), 596
esp_ble_mesh_schedule_register_t::in_use (C++ *member*), 596
esp_ble_mesh_schedule_register_t::minute (C++ *member*), 596
esp_ble_mesh_schedule_register_t::month (C++ *member*), 596
esp_ble_mesh_schedule_register_t::scene_number (C++ *member*), 596
esp_ble_mesh_schedule_register_t::second (C++ *member*), 596
esp_ble_mesh_schedule_register_t::trans_time (C++ *member*), 596
esp_ble_mesh_schedule_register_t::year (C++ *member*), 596
ESP_BLE_MESH_SCHEDULE_SCENE_NO_SCENE (*C macro*), 608
ESP_BLE_MESH_SCHEDULE_SEC_ANY_OF_HOUR (*C macro*), 607
ESP_BLE_MESH_SCHEDULE_SEC_ANY_OF_MIN (*C macro*), 607
ESP_BLE_MESH_SCHEDULE_SEC_EVERY_15_MIN (*C macro*), 607
ESP_BLE_MESH_SCHEDULE_SEC_EVERY_15_SEC (*C macro*), 607
ESP_BLE_MESH_SCHEDULE_SEC_EVERY_20_MIN (*C macro*), 607
ESP_BLE_MESH_SCHEDULE_SEC_EVERY_20_SEC (*C macro*), 607
ESP_BLE_MESH_SCHEDULE_SEC_ONCE_AN_HOUR (*C macro*), 607
ESP_BLE_MESH_SCHEDULE_SEC_ONCE_AN_MIN (*C macro*), 608
ESP_BLE_MESH_SCHEDULE_YEAR_ANY_YEAR (*C macro*), 607
esp_ble_mesh_scheduler_act_get_t (*C++ struct*), 588
esp_ble_mesh_scheduler_act_get_t::index (C++ *member*), 588
esp_ble_mesh_scheduler_act_set_t (*C++ struct*), 588
esp_ble_mesh_scheduler_act_set_t::action (C++ *member*), 588
esp_ble_mesh_scheduler_act_set_t::day (C++ *member*), 588
esp_ble_mesh_scheduler_act_set_t::day_of_week (C++ *member*), 588
esp_ble_mesh_scheduler_act_set_t::hour (C++ *member*), 588
esp_ble_mesh_scheduler_act_set_t::index (C++ *member*), 588
esp_ble_mesh_scheduler_act_set_t::minute (C++ *member*), 588
esp_ble_mesh_scheduler_act_set_t::month (C++ *member*), 588
esp_ble_mesh_scheduler_act_set_t::scene_number (C++ *member*), 588
esp_ble_mesh_scheduler_act_set_t::second (C++ *member*), 588
esp_ble_mesh_scheduler_act_set_t::trans_time (C++ *member*), 588
esp_ble_mesh_scheduler_act_set_t::year (C++ *member*), 588
esp_ble_mesh_scheduler_act_status_cb_t (*C++ struct*), 591
esp_ble_mesh_scheduler_act_status_cb_t::action (C++ *member*), 591
esp_ble_mesh_scheduler_act_status_cb_t::day (C++ *member*), 591
esp_ble_mesh_scheduler_act_status_cb_t::day_of_week (C++ *member*), 591
esp_ble_mesh_scheduler_act_status_cb_t::hour (C++ *member*), 591
esp_ble_mesh_scheduler_act_status_cb_t::index (C++ *member*), 591
esp_ble_mesh_scheduler_act_status_cb_t::minute (C++ *member*), 591
esp_ble_mesh_scheduler_act_status_cb_t::month (C++ *member*), 591
esp_ble_mesh_scheduler_act_status_cb_t::scene_num (C++ *member*), 592
esp_ble_mesh_scheduler_act_status_cb_t::second (C++ *member*), 591
esp_ble_mesh_scheduler_act_status_cb_t::trans_tim (C++ *member*), 592
esp_ble_mesh_scheduler_act_status_cb_t::year (C++ *member*), 591
esp_ble_mesh_scheduler_setup_srv_t (*C++ struct*), 597
esp_ble_mesh_scheduler_setup_srv_t::model (C++ *member*), 597
esp_ble_mesh_scheduler_setup_srv_t::rsp_ctrl (C++ *member*), 597
esp_ble_mesh_scheduler_setup_srv_t::state (C++ *member*), 597
esp_ble_mesh_scheduler_srv_t (*C++ struct*), 597
esp_ble_mesh_scheduler_srv_t::model (C++ *member*), 597
esp_ble_mesh_scheduler_srv_t::rsp_ctrl (C++ *member*), 597
esp_ble_mesh_scheduler_srv_t::state (C++ *member*), 597
esp_ble_mesh_scheduler_state_t (*C++ struct*), 596
esp_ble_mesh_scheduler_state_t::schedule_count (C++ *member*), 597
esp_ble_mesh_scheduler_state_t::schedules (C++ *member*), 597
esp_ble_mesh_scheduler_status_cb_t (*C++ struct*), 591
esp_ble_mesh_scheduler_status_cb_t::schedules (C++ *member*), 591
ESP_BLE_MESH_SDU_MAX_LEN (*C macro*), 425
ESP_BLE_MESH_SELF_TEST_ERROR (*C macro*), 519

ESP_BLE_MESH_SELF_TEST_WARNING (C macro), 519
esp_ble_mesh_sensor_cadence_get_t (C++ struct), 565
esp_ble_mesh_sensor_cadence_get_t::property_id (C++ member), 565
esp_ble_mesh_sensor_cadence_set_t (C++ struct), 565
esp_ble_mesh_sensor_cadence_set_t::fast_cadence_high (C++ member), 566
esp_ble_mesh_sensor_cadence_set_t::fast_cadence_low (C++ member), 566
esp_ble_mesh_sensor_cadence_set_t::fast_cadence_period_divisor (C++ member), 566
esp_ble_mesh_sensor_cadence_set_t::property_id (C++ member), 566
esp_ble_mesh_sensor_cadence_set_t::status_trigger_delta_down (C++ member), 566
esp_ble_mesh_sensor_cadence_set_t::status_trigger_delta_up (C++ member), 566
esp_ble_mesh_sensor_cadence_set_t::status_trigger_type (C++ member), 566
esp_ble_mesh_sensor_cadence_status_cb_t (C++ struct), 568
esp_ble_mesh_sensor_cadence_status_cb_t::property_id (C++ member), 568
esp_ble_mesh_sensor_cadence_status_cb_t::sensor_cadence_value (C++ member), 568
esp_ble_mesh_sensor_cadence_t (C++ struct), 570
esp_ble_mesh_sensor_cadence_t::fast_cadence_high (C++ member), 571
esp_ble_mesh_sensor_cadence_t::fast_cadence_low (C++ member), 571
esp_ble_mesh_sensor_cadence_t::min_interval (C++ member), 571
esp_ble_mesh_sensor_cadence_t::period_divisor (C++ member), 571
esp_ble_mesh_sensor_cadence_t::trigger_delta_down (C++ member), 571
esp_ble_mesh_sensor_cadence_t::trigger_delta_up (C++ member), 571
esp_ble_mesh_sensor_cadence_t::trigger_type (C++ member), 571
esp_ble_mesh_sensor_client_cb_event_t (C++ enum), 580
esp_ble_mesh_sensor_client_cb_event_t::ESP_BLE_MESH_SENSOR_CLIENT_EVT_MAX (C++ enumerator), 580
esp_ble_mesh_sensor_client_cb_event_t::ESP_BLE_MESH_SENSOR_CLIENT_GET_STATE_EVT (C++ enumerator), 580
esp_ble_mesh_sensor_client_cb_event_t::ESP_BLE_MESH_SENSOR_CLIENT_PUBLISH_EVT (C++ enumerator), 580
esp_ble_mesh_sensor_client_cb_event_t::ESP_BLE_MESH_SENSOR_CLIENT_SET_STATE_EVT (C++ enumerator), 580
esp_ble_mesh_sensor_client_cb_event_t::ESP_BLE_MESH_SENSOR_CLIENT_TIMEOUT_EVT (C++ enumerator), 580
esp_ble_mesh_sensor_client_cb_param_t (C++ struct), 569
esp_ble_mesh_sensor_client_cb_param_t::error_code (C++ member), 569
esp_ble_mesh_sensor_client_cb_param_t::params (C++ member), 570
esp_ble_mesh_sensor_client_cb_param_t::status_cb (C++ member), 570
esp_ble_mesh_sensor_client_cb_t (C++ type), 580
esp_ble_mesh_sensor_client_get_state (C++ function), 561
esp_ble_mesh_sensor_client_get_state_t (C++ union), 562
esp_ble_mesh_sensor_client_get_state_t::cadence_get (C++ member), 562
esp_ble_mesh_sensor_client_get_state_t::column_get (C++ member), 563
esp_ble_mesh_sensor_client_get_state_t::descriptor_get (C++ member), 562
esp_ble_mesh_sensor_client_get_state_t::sensor_get (C++ member), 563
esp_ble_mesh_sensor_client_get_state_t::series_get (C++ member), 563
esp_ble_mesh_sensor_client_get_state_t::setting_get (C++ member), 562
esp_ble_mesh_sensor_client_get_state_t::settings_get (C++ member), 562
esp_ble_mesh_sensor_client_set_state (C++ function), 562
esp_ble_mesh_sensor_client_set_state_t (C++ union), 563
esp_ble_mesh_sensor_client_set_state_t::cadence_set (C++ member), 563
esp_ble_mesh_sensor_client_set_state_t::setting_set (C++ member), 563
esp_ble_mesh_sensor_client_status_cb_t (C++ union), 563
esp_ble_mesh_sensor_client_status_cb_t::cadence_status (C++ member), 563
esp_ble_mesh_sensor_client_status_cb_t::column_status (C++ member), 563
esp_ble_mesh_sensor_client_status_cb_t::descriptor_status (C++ member), 563
esp_ble_mesh_sensor_client_status_cb_t::sensor_status (C++ member), 563
esp_ble_mesh_sensor_client_status_cb_t::series_status (C++ member), 563
esp_ble_mesh_sensor_client_status_cb_t::setting_status (C++ member), 563
esp_ble_mesh_sensor_client_status_cb_t::settings_status (C++ member), 563
esp_ble_mesh_sensor_client_timeout_param_t (C++ struct), 567
esp_ble_mesh_sensor_client_timeout_param_t::opcode (C++ member), 567
esp_ble_mesh_sensor_client_timeout_param_t::property_id (C++ member), 567
esp_ble_mesh_sensor_client_timeout_param_t::value_x (C++ member), 567

esp_ble_mesh_sensor_column_status_cb_t (C++ struct), 569
esp_ble_mesh_sensor_column_status_cb_t::property_id (C++ member), 569
esp_ble_mesh_sensor_column_status_cb_t::sensor_column_value (C++ member), 569
ESP_BLE_MESH_SENSOR_DATA_FORMAT_A (C macro), 578
ESP_BLE_MESH_SENSOR_DATA_FORMAT_A_MPID (C macro), 579
ESP_BLE_MESH_SENSOR_DATA_FORMAT_A_MPID_LEN (C macro), 578
ESP_BLE_MESH_SENSOR_DATA_FORMAT_B (C macro), 578
ESP_BLE_MESH_SENSOR_DATA_FORMAT_B_MPID (C macro), 579
ESP_BLE_MESH_SENSOR_DATA_FORMAT_B_MPID_LEN (C macro), 578
esp_ble_mesh_sensor_data_t (C++ struct), 571
esp_ble_mesh_sensor_data_t::format (C++ member), 571
esp_ble_mesh_sensor_data_t::length (C++ member), 571
esp_ble_mesh_sensor_data_t::raw_value (C++ member), 571
ESP_BLE_MESH_SENSOR_DATA_ZERO_LEN (C macro), 578
esp_ble_mesh_sensor_descriptor_get_t (C++ struct), 565
esp_ble_mesh_sensor_descriptor_get_t::op_en (C++ member), 565
esp_ble_mesh_sensor_descriptor_get_t::property_id (C++ member), 565
ESP_BLE_MESH_SENSOR_DESCRIPTOR_LEN (C macro), 577
esp_ble_mesh_sensor_descriptor_status_cb_t (C++ struct), 568
esp_ble_mesh_sensor_descriptor_status_cb_t::descriptor (C++ member), 568
esp_ble_mesh_sensor_descriptor_t (C++ struct), 570
esp_ble_mesh_sensor_descriptor_t::measure_period (C++ member), 570
esp_ble_mesh_sensor_descriptor_t::negative_tolerance (C++ member), 570
esp_ble_mesh_sensor_descriptor_t::positive_tolerance (C++ member), 570
esp_ble_mesh_sensor_descriptor_t::sampling_function (C++ member), 570
esp_ble_mesh_sensor_descriptor_t::update_interval (C++ member), 570
ESP_BLE_MESH_SENSOR_DIVISOR_TRIGGER_TYPE_LEN (C macro), 578
esp_ble_mesh_sensor_get_t (C++ struct), 567
esp_ble_mesh_sensor_get_t::op_en (C++ member), 567
esp_ble_mesh_sensor_get_t::property_id (C++ member), 567
esp_ble_mesh_sensor_message_opcode_t (C++ type), 449
ESP_BLE_MESH_SENSOR_NOT_APPL_MEASURE_PERIOD (C macro), 577
ESP_BLE_MESH_SENSOR_NOT_APPL_UPDATE_INTERVAL (C macro), 577
ESP_BLE_MESH_SENSOR_PERIOD_DIVISOR_MAX_VALUE (C macro), 578
ESP_BLE_MESH_SENSOR_PROPERTY_ID_LEN (C macro), 577
esp_ble_mesh_sensor_sample_func (C++ enum), 580
esp_ble_mesh_sensor_sample_func::ESP_BLE_MESH_SAM (C++ enumerator), 581
esp_ble_mesh_sensor_sample_func::ESP_BLE_MESH_SAM (C++ enumerator), 581
esp_ble_mesh_sensor_sample_func::ESP_BLE_MESH_SAM (C++ enumerator), 581
esp_ble_mesh_sensor_sample_func::ESP_BLE_MESH_SAM (C++ enumerator), 580
esp_ble_mesh_sensor_sample_func::ESP_BLE_MESH_SAM (C++ enumerator), 581
esp_ble_mesh_sensor_sample_func::ESP_BLE_MESH_SAM (C++ enumerator), 581
esp_ble_mesh_sensor_sample_func::ESP_BLE_MESH_SAM (C++ enumerator), 581
esp_ble_mesh_sensor_sample_func::ESP_BLE_MESH_SAM (C++ enumerator), 580
esp_ble_mesh_sensor_series_column_t (C++ struct), 571
esp_ble_mesh_sensor_series_column_t::column_width (C++ member), 572
esp_ble_mesh_sensor_series_column_t::raw_value_x (C++ member), 571
esp_ble_mesh_sensor_series_column_t::raw_value_y (C++ member), 572
esp_ble_mesh_sensor_series_get_t (C++ struct), 567
esp_ble_mesh_sensor_series_get_t::op_en (C++ member), 567
esp_ble_mesh_sensor_series_get_t::property_id (C++ member), 567
esp_ble_mesh_sensor_series_get_t::raw_value_x1 (C++ member), 567
esp_ble_mesh_sensor_series_get_t::raw_value_x2 (C++ member), 567
esp_ble_mesh_sensor_series_status_cb_t (C++ struct), 569
esp_ble_mesh_sensor_series_status_cb_t::property_ (C++ member), 569
esp_ble_mesh_sensor_series_status_cb_t::sensor_se (C++ member), 569
esp_ble_mesh_sensor_server_cb_event_t (C++ enum), 581
esp_ble_mesh_sensor_server_cb_event_t::ESP_BLE_ME (C++ enumerator), 581
esp_ble_mesh_sensor_server_cb_event_t::ESP_BLE_ME

(C++ *enumerator*), 581
esp_ble_mesh_sensor_server_cb_event_t::ESP_BLE_MESH_SENSOR_SERVER_RECV_GET_MSG_EVT
(C++ *enumerator*), 581
esp_ble_mesh_sensor_server_cb_event_t::ESP_BLE_MESH_SENSOR_SERVER_RECV_SET_MSG_EVT
(C++ *enumerator*), 581
esp_ble_mesh_sensor_server_cb_event_t::ESP_BLE_MESH_SENSOR_SERVER_STATE_CHANGE_EVT
(C++ *enumerator*), 581
esp_ble_mesh_sensor_server_cb_param_t (C++ *struct*), 576
esp_ble_mesh_sensor_server_cb_param_t::ctx (C++ *member*), 576
esp_ble_mesh_sensor_server_cb_param_t::model (C++ *member*), 576
esp_ble_mesh_sensor_server_cb_param_t::value (C++ *member*), 576
esp_ble_mesh_sensor_server_cb_t (C++ *type*), 580
esp_ble_mesh_sensor_server_cb_value_t (C++ *union*), 565
esp_ble_mesh_sensor_server_cb_value_t::get (C++ *member*), 565
esp_ble_mesh_sensor_server_cb_value_t::set (C++ *member*), 565
esp_ble_mesh_sensor_server_cb_value_t::state_change (C++ *member*), 565
esp_ble_mesh_sensor_server_recv_get_msg_t (C++ *union*), 564
esp_ble_mesh_sensor_server_recv_get_msg_t::sensor_setting (C++ *member*), 564
esp_ble_mesh_sensor_server_recv_get_msg_t::sensor_state (C++ *member*), 564
esp_ble_mesh_sensor_server_recv_get_msg_t::settings_get (C++ *member*), 564
esp_ble_mesh_sensor_server_recv_get_msg_t::state (C++ *member*), 564
esp_ble_mesh_sensor_server_recv_set_msg_t (C++ *union*), 564
esp_ble_mesh_sensor_server_recv_set_msg_t::sensor_setting (C++ *member*), 564
esp_ble_mesh_sensor_server_recv_set_msg_t::settings_set (C++ *member*), 565
esp_ble_mesh_sensor_server_state_change_t (C++ *union*), 564
esp_ble_mesh_sensor_server_state_change_t::sensor_setting (C++ *member*), 564
esp_ble_mesh_sensor_server_state_change_t::settings_set (C++ *member*), 564
ESP_BLE_MESH_SENSOR_SETTING_ACCESS_LEN (C *macro*), 578
ESP_BLE_MESH_SENSOR_SETTING_ACCESS_READ (C *macro*), 578
ESP_BLE_MESH_SENSOR_SETTING_ACCESS_READ_WRITE (C *macro*), 578
esp_ble_mesh_sensor_setting_get_t (C++ *struct*), 566
esp_ble_mesh_sensor_setting_get_t::property_id (C++ *member*), 566
esp_ble_mesh_sensor_setting_get_t::sensor_setting_id (C++ *member*), 566
ESP_BLE_MESH_SENSOR_SETTING_PROPERTY_ID_LEN (C *macro*), 578
esp_ble_mesh_sensor_setting_set_t (C++ *struct*), 566
esp_ble_mesh_sensor_setting_set_t::property_id (C++ *member*), 567
esp_ble_mesh_sensor_setting_set_t::sensor_setting_id (C++ *member*), 567
esp_ble_mesh_sensor_setting_set_t::sensor_setting_len (C++ *member*), 567
esp_ble_mesh_sensor_setting_status_cb_t (C++ *struct*), 568
esp_ble_mesh_sensor_setting_status_cb_t::op_en (C++ *member*), 568
esp_ble_mesh_sensor_setting_status_cb_t::sensor_property_id (C++ *member*), 568
esp_ble_mesh_sensor_setting_status_cb_t::sensor_setting_id (C++ *member*), 569
esp_ble_mesh_sensor_setting_status_cb_t::sensor_setting_len (C++ *member*), 568
esp_ble_mesh_sensor_setting_status_cb_t::sensor_setting_val (C++ *member*), 569
esp_ble_mesh_sensor_setting_t (C++ *struct*), 570
esp_ble_mesh_sensor_setting_t::access (C++ *member*), 570
esp_ble_mesh_sensor_setting_t::property_id (C++ *member*), 570
esp_ble_mesh_sensor_setting_t::raw (C++ *member*), 570
esp_ble_mesh_sensor_settings_get_t (C++ *struct*), 566
esp_ble_mesh_sensor_settings_get_t::sensor_property_id (C++ *member*), 566
esp_ble_mesh_sensor_settings_status_cb_t (C++ *struct*), 568
esp_ble_mesh_sensor_settings_status_cb_t::sensor_property_id (C++ *member*), 568
esp_ble_mesh_sensor_settings_status_cb_t::sensor_setting_ids (C++ *member*), 568
esp_ble_mesh_sensor_setup_srv_t (C++ *struct*), 573
esp_ble_mesh_sensor_setup_srv_t::model (C++ *member*), 573
esp_ble_mesh_sensor_setup_srv_t::rsp_ctrl (C++ *member*), 573
esp_ble_mesh_sensor_setup_srv_t::state_count (C++ *member*), 573
esp_ble_mesh_sensor_setup_srv_t::states (C++ *member*), 573
esp_ble_mesh_sensor_srv_t (C++ *struct*), 572
esp_ble_mesh_sensor_srv_t::model (C++ *member*), 572

esp_ble_mesh_sensor_srv_t::rsp_ctrl (C++ member), 572
esp_ble_mesh_sensor_srv_t::state_count (C++ member), 572
esp_ble_mesh_sensor_srv_t::states (C++ member), 573
esp_ble_mesh_sensor_state_t (C++ struct), 572
esp_ble_mesh_sensor_state_t::cadence (C++ member), 572
esp_ble_mesh_sensor_state_t::descriptor (C++ member), 572
esp_ble_mesh_sensor_state_t::sensor_data (C++ member), 572
esp_ble_mesh_sensor_state_t::sensor_property_id (C++ member), 572
esp_ble_mesh_sensor_state_t::series_column (C++ member), 572
esp_ble_mesh_sensor_state_t::setting_count (C++ member), 572
esp_ble_mesh_sensor_state_t::settings (C++ member), 572
esp_ble_mesh_sensor_status_cb_t (C++ struct), 569
esp_ble_mesh_sensor_status_cb_t::marshalled_sensor_data (C++ member), 569
ESP_BLE_MESH_SENSOR_STATUS_MIN_INTERVAL_LEN (C macro), 578
ESP_BLE_MESH_SENSOR_STATUS_MIN_INTERVAL_MAX (C macro), 578
ESP_BLE_MESH_SENSOR_STATUS_TRIGGER_TYPE_CHAR (C macro), 578
ESP_BLE_MESH_SENSOR_STATUS_TRIGGER_TYPE_UINT16 (C macro), 578
ESP_BLE_MESH_SENSOR_UNSPECIFIED_NEG_TOLERANCE (C macro), 577
ESP_BLE_MESH_SENSOR_UNSPECIFIED_POS_TOLERANCE (C macro), 577
ESP_BLE_MESH_SERVER_AUTO_RSP (C macro), 448
esp_ble_mesh_server_model_send_msg (C++ function), 464
esp_ble_mesh_server_model_update_state (C++ function), 465
esp_ble_mesh_server_recv_gen_admin_property_get (C++ struct), 549
esp_ble_mesh_server_recv_gen_admin_property_get::property_id (C++ member), 549
esp_ble_mesh_server_recv_gen_admin_property_set (C++ struct), 553
esp_ble_mesh_server_recv_gen_admin_property_set::property_id (C++ member), 554
esp_ble_mesh_server_recv_gen_admin_property_set::property_value (C++ member), 554
esp_ble_mesh_server_recv_gen_admin_property_set::user_access (C++ member), 554
esp_ble_mesh_server_recv_gen_client_properties_get (C++ struct), 549
esp_ble_mesh_server_recv_gen_client_properties_get (C++ member), 549
esp_ble_mesh_server_recv_gen_def_trans_time_set_t (C++ struct), 551
esp_ble_mesh_server_recv_gen_def_trans_time_set_t (C++ member), 551
esp_ble_mesh_server_recv_gen_delta_set_t (C++ struct), 550
esp_ble_mesh_server_recv_gen_delta_set_t::delay (C++ member), 551
esp_ble_mesh_server_recv_gen_delta_set_t::delta_l (C++ member), 551
esp_ble_mesh_server_recv_gen_delta_set_t::op_en (C++ member), 550
esp_ble_mesh_server_recv_gen_delta_set_t::tid (C++ member), 551
esp_ble_mesh_server_recv_gen_delta_set_t::trans_t (C++ member), 551
esp_ble_mesh_server_recv_gen_level_set_t (C++ struct), 550
esp_ble_mesh_server_recv_gen_level_set_t::delay (C++ member), 550
esp_ble_mesh_server_recv_gen_level_set_t::level (C++ member), 550
esp_ble_mesh_server_recv_gen_level_set_t::op_en (C++ member), 550
esp_ble_mesh_server_recv_gen_level_set_t::tid (C++ member), 550
esp_ble_mesh_server_recv_gen_level_set_t::trans_t (C++ member), 550
esp_ble_mesh_server_recv_gen_loc_global_set_t (C++ struct), 552
esp_ble_mesh_server_recv_gen_loc_global_set_t::gl (C++ member), 553
esp_ble_mesh_server_recv_gen_loc_global_set_t::gl (C++ member), 553
esp_ble_mesh_server_recv_gen_loc_global_set_t::gl (C++ member), 553
esp_ble_mesh_server_recv_gen_loc_local_set_t (C++ struct), 553
esp_ble_mesh_server_recv_gen_loc_local_set_t::flo (C++ member), 553
esp_ble_mesh_server_recv_gen_loc_local_set_t::loc (C++ member), 553
esp_ble_mesh_server_recv_gen_loc_local_set_t::loc (C++ member), 553
esp_ble_mesh_server_recv_gen_loc_local_set_t::loc (C++ member), 553
esp_ble_mesh_server_recv_gen_loc_local_set_t::unc (C++ member), 553
esp_ble_mesh_server_recv_gen_manufacturer_propert (C++ struct), 549
esp_ble_mesh_server_recv_gen_manufacturer_propert (C++ member), 549
esp_ble_mesh_server_recv_gen_manufacturer_propert (C++ struct), 554
esp_ble_mesh_server_recv_gen_manufacturer_propert (C++ member), 554

esp_ble_mesh_server_recv_gen_manufactur (C++ member), 554
esp_ble_mesh_server_recv_gen_move_set_t (C++ struct), 551
esp_ble_mesh_server_recv_gen_move_set_t (C++ member), 551
esp_ble_mesh_server_recv_gen_move_set_t (C++ member), 551
esp_ble_mesh_server_recv_gen_move_set_t (C++ member), 551
esp_ble_mesh_server_recv_gen_move_set_t (C++ member), 551
esp_ble_mesh_server_recv_gen_move_set_t (C++ member), 551
esp_ble_mesh_server_recv_gen_onoff_set_t (C++ struct), 549
esp_ble_mesh_server_recv_gen_onoff_set_t (C++ member), 550
esp_ble_mesh_server_recv_gen_onoff_set_t (C++ member), 550
esp_ble_mesh_server_recv_gen_onoff_set_t (C++ member), 550
esp_ble_mesh_server_recv_gen_onoff_set_t (C++ member), 550
esp_ble_mesh_server_recv_gen_onoff_set_t (C++ member), 550
esp_ble_mesh_server_recv_gen_onpowerup_s (C++ struct), 551
esp_ble_mesh_server_recv_gen_onpowerup_s (C++ member), 552
esp_ble_mesh_server_recv_gen_power_defau (C++ struct), 552
esp_ble_mesh_server_recv_gen_power_defau (C++ member), 552
esp_ble_mesh_server_recv_gen_power_level (C++ struct), 552
esp_ble_mesh_server_recv_gen_power_level (C++ member), 552
esp_ble_mesh_server_recv_gen_power_level (C++ member), 552
esp_ble_mesh_server_recv_gen_power_level (C++ member), 552
esp_ble_mesh_server_recv_gen_power_level (C++ member), 552
esp_ble_mesh_server_recv_gen_power_level (C++ member), 552
esp_ble_mesh_server_recv_gen_power_range (C++ struct), 552
esp_ble_mesh_server_recv_gen_power_range (C++ member), 552
esp_ble_mesh_server_recv_gen_power_range (C++ member), 552
esp_ble_mesh_server_recv_gen_user_proper (C++ struct), 549
esp_ble_mesh_server_recv_gen_user_proper (C++ member), 549
esp_ble_mesh_server_recv_gen_user_proper (C++ struct), 553
esp_ble_mesh_server_recv_gen_user_proper (C++ member), 553
esp_ble_mesh_server_recv_gen_user_proper (C++ member), 553
esp_ble_mesh_server_recv_light_ctl_default_set_t (C++ struct), 654
esp_ble_mesh_server_recv_light_ctl_default_set_t (C++ member), 654
esp_ble_mesh_server_recv_light_ctl_default_set_t (C++ member), 654
esp_ble_mesh_server_recv_light_ctl_default_set_t (C++ member), 654
esp_ble_mesh_server_recv_light_ctl_set_t (C++ struct), 653
esp_ble_mesh_server_recv_light_ctl_set_t::delay (C++ member), 653
esp_ble_mesh_server_recv_light_ctl_set_t::delta_u (C++ member), 653
esp_ble_mesh_server_recv_light_ctl_set_t::lightne (C++ member), 653
esp_ble_mesh_server_recv_light_ctl_set_t::op_en (C++ member), 653
esp_ble_mesh_server_recv_light_ctl_set_t::tempera (C++ member), 653
esp_ble_mesh_server_recv_light_ctl_set_t::tid (C++ member), 653
esp_ble_mesh_server_recv_light_ctl_set_t::trans_t (C++ member), 653
esp_ble_mesh_server_recv_light_ctl_temperature_ra (C++ struct), 654
esp_ble_mesh_server_recv_light_ctl_temperature_ra (C++ member), 654
esp_ble_mesh_server_recv_light_ctl_temperature_ra (C++ member), 654
esp_ble_mesh_server_recv_light_ctl_temperature_se (C++ struct), 653
esp_ble_mesh_server_recv_light_ctl_temperature_se (C++ member), 654
esp_ble_mesh_server_recv_light_ctl_temperature_se (C++ member), 653
esp_ble_mesh_server_recv_light_ctl_temperature_se (C++ member), 653
esp_ble_mesh_server_recv_light_ctl_temperature_se (C++ member), 653
esp_ble_mesh_server_recv_light_ctl_temperature_se (C++ member), 653
esp_ble_mesh_server_recv_light_ctl_temperature_se (C++ struct), 654
esp_ble_mesh_server_recv_light_hsl_default_set_t (C++ struct), 656
esp_ble_mesh_server_recv_light_hsl_default_set_t: (C++ member), 656
esp_ble_mesh_server_recv_light_hsl_default_set_t: (C++ member), 656
esp_ble_mesh_server_recv_light_hsl_default_set_t: (C++ member), 656
esp_ble_mesh_server_recv_light_hsl_hue_set_t (C++ struct), 655

esp_ble_mesh_server_recv_light_hsl_hue_set::delay (*C++ member*), 655
esp_ble_mesh_server_recv_light_hsl_hue_set::hue (*C++ member*), 655
esp_ble_mesh_server_recv_light_hsl_hue_set::op_en (*C++ member*), 655
esp_ble_mesh_server_recv_light_hsl_hue_set::tid (*C++ member*), 655
esp_ble_mesh_server_recv_light_hsl_hue_set::trans_time (*C++ member*), 655
esp_ble_mesh_server_recv_light_hsl_range_set (*C++ struct*), 656
esp_ble_mesh_server_recv_light_hsl_range_set::hue_range_max (*C++ member*), 656
esp_ble_mesh_server_recv_light_hsl_range_set::hue_range_min (*C++ member*), 656
esp_ble_mesh_server_recv_light_hsl_range_set::saturation_range_max (*C++ member*), 656
esp_ble_mesh_server_recv_light_hsl_range_set::saturation_range_min (*C++ member*), 656
esp_ble_mesh_server_recv_light_hsl_saturation_set (*C++ struct*), 655
esp_ble_mesh_server_recv_light_hsl_saturation_set::delay (*C++ member*), 656
esp_ble_mesh_server_recv_light_hsl_saturation_set::op_en (*C++ member*), 655
esp_ble_mesh_server_recv_light_hsl_saturation_set::saturation (*C++ member*), 655
esp_ble_mesh_server_recv_light_hsl_saturation_set::tid (*C++ member*), 655
esp_ble_mesh_server_recv_light_hsl_saturation_set::trans_time (*C++ member*), 656
esp_ble_mesh_server_recv_light_hsl_set (*C++ struct*), 654
esp_ble_mesh_server_recv_light_hsl_set::delay (*C++ member*), 655
esp_ble_mesh_server_recv_light_hsl_set::hue (*C++ member*), 654
esp_ble_mesh_server_recv_light_hsl_set::lightness (*C++ member*), 654
esp_ble_mesh_server_recv_light_hsl_set::op_en (*C++ member*), 654
esp_ble_mesh_server_recv_light_hsl_set::saturation (*C++ member*), 655
esp_ble_mesh_server_recv_light_hsl_set::tid (*C++ member*), 655
esp_ble_mesh_server_recv_light_hsl_set::trans_time (*C++ member*), 655
esp_ble_mesh_server_recv_light_lc_light_onoff_set (*C++ struct*), 658
esp_ble_mesh_server_recv_light_lc_light_onoff_set::delay (*C++ member*), 658
esp_ble_mesh_server_recv_light_lc_light_onoff_set::op_en (*C++ member*), 658
esp_ble_mesh_server_recv_light_lc_light_onoff_set::tid (*C++ member*), 658
esp_ble_mesh_server_recv_light_lc_light_onoff_set::trans_time (*C++ member*), 658
esp_ble_mesh_server_recv_light_lc_mode_set_t (*C++ struct*), 658
esp_ble_mesh_server_recv_light_lc_mode_set_t::mode (*C++ member*), 658
esp_ble_mesh_server_recv_light_lc_om_set_t (*C++ struct*), 658
esp_ble_mesh_server_recv_light_lc_om_set_t::mode (*C++ member*), 658
esp_ble_mesh_server_recv_light_lc_property_get_t (*C++ struct*), 651
esp_ble_mesh_server_recv_light_lc_property_get_t::property_id (*C++ member*), 651
esp_ble_mesh_server_recv_light_lc_property_set_t (*C++ struct*), 658
esp_ble_mesh_server_recv_light_lc_property_set_t::property_id (*C++ member*), 659
esp_ble_mesh_server_recv_light_lc_property_set_t::property_val (*C++ member*), 659
esp_ble_mesh_server_recv_light_lightness_default_set (*C++ struct*), 652
esp_ble_mesh_server_recv_light_lightness_default_set::lightness (*C++ member*), 652
esp_ble_mesh_server_recv_light_lightness_linear_set (*C++ struct*), 652
esp_ble_mesh_server_recv_light_lightness_linear_set::lightness (*C++ member*), 652
esp_ble_mesh_server_recv_light_lightness_linear_set::op_en (*C++ member*), 652
esp_ble_mesh_server_recv_light_lightness_linear_set::tid (*C++ member*), 652
esp_ble_mesh_server_recv_light_lightness_linear_set::trans_time (*C++ member*), 652
esp_ble_mesh_server_recv_light_lightness_range_set (*C++ struct*), 652
esp_ble_mesh_server_recv_light_lightness_range_set::max_value (*C++ member*), 653
esp_ble_mesh_server_recv_light_lightness_range_set::min_value (*C++ member*), 653
esp_ble_mesh_server_recv_light_lightness_set_t (*C++ struct*), 651
esp_ble_mesh_server_recv_light_lightness_set_t::delay (*C++ member*), 652
esp_ble_mesh_server_recv_light_lightness_set_t::lightness (*C++ member*), 652
esp_ble_mesh_server_recv_light_lightness_set_t::op_en (*C++ member*), 652
esp_ble_mesh_server_recv_light_lightness_set_t::tid (*C++ member*), 652
esp_ble_mesh_server_recv_light_lightness_set_t::trans_time (*C++ member*), 652
esp_ble_mesh_server_recv_light_xyl_default_set_t (*C++ struct*), 657
esp_ble_mesh_server_recv_light_xyl_default_set_t::delay (*C++ member*), 657

esp_ble_mesh_server_recv_light_xyl_defa (C++ member), 657
esp_ble_mesh_server_recv_light_xyl_defa (C++ member), 657
esp_ble_mesh_server_recv_light_xyl_rang (C++ struct), 657
esp_ble_mesh_server_recv_light_xyl_rang (C++ member), 657
esp_ble_mesh_server_recv_light_xyl_rang (C++ member), 657
esp_ble_mesh_server_recv_light_xyl_rang (C++ member), 658
esp_ble_mesh_server_recv_light_xyl_rang (C++ member), 657
esp_ble_mesh_server_recv_light_xyl_set_t (C++ struct), 656
esp_ble_mesh_server_recv_light_xyl_set_t (C++ member), 657
esp_ble_mesh_server_recv_light_xyl_set_t (C++ member), 657
esp_ble_mesh_server_recv_light_xyl_set_t (C++ member), 656
esp_ble_mesh_server_recv_light_xyl_set_t (C++ member), 657
esp_ble_mesh_server_recv_scene_delete_t (C++ struct), 602
esp_ble_mesh_server_recv_scene_delete_t (C++ member), 602
esp_ble_mesh_server_recv_scene_recall_t (C++ struct), 602
esp_ble_mesh_server_recv_scene_recall_t (C++ member), 602
esp_ble_mesh_server_recv_scene_recall_t (C++ member), 602
esp_ble_mesh_server_recv_scene_recall_t (C++ member), 602
esp_ble_mesh_server_recv_scene_recall_t (C++ member), 602
esp_ble_mesh_server_recv_scene_store_t (C++ struct), 602
esp_ble_mesh_server_recv_scene_store_t (C++ member), 602
esp_ble_mesh_server_recv_scheduler_act_ (C++ struct), 600
esp_ble_mesh_server_recv_scheduler_act_ (C++ member), 600
esp_ble_mesh_server_recv_scheduler_act_ (C++ struct), 602
esp_ble_mesh_server_recv_scheduler_act_ (C++ member), 603
esp_ble_mesh_server_recv_scheduler_act_ (C++ member), 603
esp_ble_mesh_server_recv_scheduler_act_ (C++ member), 603
esp_ble_mesh_server_recv_scheduler_act_ (C++ member), 603
esp_ble_mesh_server_recv_scheduler_act_ (C++ member), 603
esp_ble_mesh_server_recv_scheduler_act_ (C++ member), 603
esp_ble_mesh_server_recv_scheduler_act_ (C++ member), 603
esp_ble_mesh_server_recv_scheduler_act_ (C++ member), 603
esp_ble_mesh_server_recv_scheduler_act_ (C++ member), 603
esp_ble_mesh_server_recv_sensor_cadence_get_t (C++ struct), 574
esp_ble_mesh_server_recv_sensor_cadence_get_t (C++ member), 574
esp_ble_mesh_server_recv_sensor_cadence_set_t (C++ struct), 575
esp_ble_mesh_server_recv_sensor_cadence_set_t (C++ member), 576
esp_ble_mesh_server_recv_sensor_cadence_set_t (C++ member), 576
esp_ble_mesh_server_recv_sensor_column_get_t (C++ struct), 575
esp_ble_mesh_server_recv_sensor_column_get_t (C++ member), 575
esp_ble_mesh_server_recv_sensor_column_get_t (C++ member), 575
esp_ble_mesh_server_recv_sensor_descriptor_get_t (C++ struct), 574
esp_ble_mesh_server_recv_sensor_descriptor_get_t (C++ member), 574
esp_ble_mesh_server_recv_sensor_descriptor_get_t (C++ member), 574
esp_ble_mesh_server_recv_sensor_get_t (C++ struct), 575
esp_ble_mesh_server_recv_sensor_get_t (C++ member), 575
esp_ble_mesh_server_recv_sensor_get_t (C++ member), 575
esp_ble_mesh_server_recv_sensor_series_get_t (C++ struct), 575
esp_ble_mesh_server_recv_sensor_series_get_t (C++ member), 575
esp_ble_mesh_server_recv_sensor_series_get_t (C++ member), 575
esp_ble_mesh_server_recv_sensor_series_get_t (C++ member), 575
esp_ble_mesh_server_recv_sensor_setting_get_t (C++ struct), 574

esp_ble_mesh_server_recv_sensor_setting (C++ member), 575
esp_ble_mesh_server_recv_sensor_setting (C++ member), 575
esp_ble_mesh_server_recv_sensor_setting (C++ struct), 576
esp_ble_mesh_server_recv_sensor_setting (C++ member), 576
esp_ble_mesh_server_recv_sensor_setting (C++ member), 576
esp_ble_mesh_server_recv_sensor_setting (C++ member), 576
esp_ble_mesh_server_recv_sensor_setting (C++ struct), 574
esp_ble_mesh_server_recv_sensor_setting (C++ member), 574
esp_ble_mesh_server_recv_sensor_status (C++ struct), 659
esp_ble_mesh_server_recv_sensor_status (C++ member), 659
esp_ble_mesh_server_recv_tai_utc_delta_set (C++ struct), 601
esp_ble_mesh_server_recv_tai_utc_delta_set (C++ member), 601
esp_ble_mesh_server_recv_tai_utc_delta_set (C++ member), 601
esp_ble_mesh_server_recv_tai_utc_delta_set (C++ member), 601
esp_ble_mesh_server_recv_time_role_set (C++ struct), 601
esp_ble_mesh_server_recv_time_role_set (C++ member), 602
esp_ble_mesh_server_recv_time_set_t (C++ struct), 600
esp_ble_mesh_server_recv_time_set_t::subsecond (C++ member), 601
esp_ble_mesh_server_recv_time_set_t::tai_seconds (C++ member), 601
esp_ble_mesh_server_recv_time_set_t::tai_utc_delta (C++ member), 601
esp_ble_mesh_server_recv_time_set_t::time_authority (C++ member), 601
esp_ble_mesh_server_recv_time_set_t::time_zone_offset (C++ member), 601
esp_ble_mesh_server_recv_time_set_t::uncertainty (C++ member), 601
esp_ble_mesh_server_recv_time_status_t (C++ struct), 603
esp_ble_mesh_server_recv_time_status_t::subsecond (C++ member), 603
esp_ble_mesh_server_recv_time_status_t::tai_seconds (C++ member), 603
esp_ble_mesh_server_recv_time_status_t::tai_utc_delta (C++ member), 604
esp_ble_mesh_server_recv_time_status_t::time_authority (C++ member), 603
esp_ble_mesh_server_recv_time_status_t::time_zone_offset (C++ member), 604
esp_ble_mesh_server_recv_time_status_t::uncertainty (C++ member), 603
esp_ble_mesh_server_recv_time_zone_set_t (C++ struct), 601
esp_ble_mesh_server_recv_time_zone_set_t::tai_zone_change (C++ member), 601
esp_ble_mesh_server_recv_time_zone_set_t::time_zone_offset (C++ member), 601
ESP_BLE_MESH_SERVER_RSP_BY_APP (C macro), 448
esp_ble_mesh_server_rsp_ctrl_t (C++ struct), 425
esp_ble_mesh_server_rsp_ctrl_t::get_auto_rsp (C++ member), 425
esp_ble_mesh_server_rsp_ctrl_t::set_auto_rsp (C++ member), 425
esp_ble_mesh_server_rsp_ctrl_t::status_auto_rsp (C++ member), 425
esp_ble_mesh_server_state_type_t (C++ enum), 458
esp_ble_mesh_server_state_type_t::ESP_BLE_MESH_GEN_BATTERY_STATE (C++ enumerator), 458
esp_ble_mesh_server_state_type_t::ESP_BLE_MESH_GEN_DEFAULT_TRANS_TIME (C++ enumerator), 458
esp_ble_mesh_server_state_type_t::ESP_BLE_MESH_GEN_LOCATION_STATE (C++ enumerator), 458
esp_ble_mesh_server_state_type_t::ESP_BLE_MESH_GEN_ONOFF_STATE (C++ enumerator), 458
esp_ble_mesh_server_state_type_t::ESP_BLE_MESH_GEN_POWER_LEVEL_STATE (C++ enumerator), 458
esp_ble_mesh_server_state_type_t::ESP_BLE_MESH_GEN_POWER_ONOFF_STATE (C++ enumerator), 458
esp_ble_mesh_server_state_type_t::ESP_BLE_MESH_GEN_POWER_ONOFF_SETUP_STATE (C++ enumerator), 458
esp_ble_mesh_server_state_type_t::ESP_BLE_MESH_LIGHT_CTL_LIGHTNESS_STATE (C++ enumerator), 458
esp_ble_mesh_server_state_type_t::ESP_BLE_MESH_LIGHT_CTL_STATE (C++ enumerator), 458
esp_ble_mesh_server_state_type_t::ESP_BLE_MESH_LIGHT_CTL_TEMP_STATE (C++ enumerator), 458
esp_ble_mesh_server_state_type_t::ESP_BLE_MESH_LIGHT_HSL_HUE_STATE (C++ enumerator), 458
esp_ble_mesh_server_state_type_t::ESP_BLE_MESH_LIGHT_HSL_SATURATION_STATE (C++ enumerator), 458
esp_ble_mesh_server_state_type_t::ESP_BLE_MESH_LIGHT_HSL_STATE (C++ enumerator), 458
esp_ble_mesh_server_state_type_t::ESP_BLE_MESH_LIGHT_LC_LIGHTNESS_STATE (C++ enumerator), 459
esp_ble_mesh_server_state_type_t::ESP_BLE_MESH_LIGHT_LC_STATE (C++ enumerator), 458
esp_ble_mesh_server_state_type_t::ESP_BLE_MESH_LIGHT_LIGHTNESS_STATE (C++ enumerator), 458
esp_ble_mesh_server_state_type_t::ESP_BLE_MESH_SENSOR_STATE (C++ enumerator), 459
esp_ble_mesh_server_state_type_t::ESP_BLE_MESH_TIME_STATE (C++ enumerator), 458
esp_ble_mesh_server_state_value_t (C++ union), 410
esp_ble_mesh_server_state_value_t::delta_uv (C++ member), 411
esp_ble_mesh_server_state_value_t::gen_level (C++ member), 410
esp_ble_mesh_server_state_value_t::gen_onoff (C++ member), 410

esp_ble_mesh_server_state_value_t::gen_onpowerup (C++ member), 410
esp_ble_mesh_server_state_value_t::gen_power_actual (C++ member), 411
esp_ble_mesh_server_state_value_t::hue (C++ member), 411
esp_ble_mesh_server_state_value_t::level (C++ member), 410
esp_ble_mesh_server_state_value_t::light_ctl_lightness (C++ member), 411
esp_ble_mesh_server_state_value_t::light_ctl_temp (C++ member), 411
esp_ble_mesh_server_state_value_t::light_hsl (C++ member), 411
esp_ble_mesh_server_state_value_t::light_hsl_hue (C++ member), 411
esp_ble_mesh_server_state_value_t::light_hsl_lightness (C++ member), 411
esp_ble_mesh_server_state_value_t::light_hsl_saturation (C++ member), 411
esp_ble_mesh_server_state_value_t::light_lc_light_onoff (C++ member), 412
esp_ble_mesh_server_state_value_t::light_lightness_actual (C++ member), 411
esp_ble_mesh_server_state_value_t::light_lightness_linear (C++ member), 411
esp_ble_mesh_server_state_value_t::light_xyl_lightness (C++ member), 412
esp_ble_mesh_server_state_value_t::lightness (C++ member), 411
esp_ble_mesh_server_state_value_t::onoff (C++ member), 410
esp_ble_mesh_server_state_value_t::onpowerup (C++ member), 410
esp_ble_mesh_server_state_value_t::power (C++ member), 411
esp_ble_mesh_server_state_value_t::saturation (C++ member), 411
esp_ble_mesh_server_state_value_t::temperature (C++ member), 411
esp_ble_mesh_set_fast_prov_action (C++ function), 476
esp_ble_mesh_set_fast_prov_info (C++ function), 476
esp_ble_mesh_set_unprovisioned_device_name (C++ function), 473
ESP_BLE_MESH_SETTINGS_UID_SIZE (C macro), 426
ESP_BLE_MESH_SIG_MODEL (C macro), 429
esp_ble_mesh_state_change_cfg_appkey_add_t (C++ struct), 506
esp_ble_mesh_state_change_cfg_appkey_add_t::app_idx (C++ member), 506
esp_ble_mesh_state_change_cfg_appkey_add_t::appkey (C++ member), 506
esp_ble_mesh_state_change_cfg_appkey_add_t::net_idx (C++ member), 506
esp_ble_mesh_state_change_cfg_appkey_delete_t (C++ struct), 507
esp_ble_mesh_state_change_cfg_appkey_delete_t::app_idx (C++ member), 507
esp_ble_mesh_state_change_cfg_appkey_delete_t::net_idx (C++ member), 507
esp_ble_mesh_state_change_cfg_appkey_update_t (C++ struct), 507
esp_ble_mesh_state_change_cfg_appkey_update_t::app_idx (C++ member), 507
esp_ble_mesh_state_change_cfg_appkey_update_t::appkey (C++ member), 507
esp_ble_mesh_state_change_cfg_appkey_update_t::net_idx (C++ member), 507
esp_ble_mesh_state_change_cfg_kr_phase_set_t (C++ struct), 508
esp_ble_mesh_state_change_cfg_kr_phase_set_t::kr_phase (C++ member), 508
esp_ble_mesh_state_change_cfg_kr_phase_set_t::net_idx (C++ member), 508
esp_ble_mesh_state_change_cfg_mod_pub_set_t (C++ struct), 504
esp_ble_mesh_state_change_cfg_mod_pub_set_t::app_idx (C++ member), 504
esp_ble_mesh_state_change_cfg_mod_pub_set_t::company_id (C++ member), 505
esp_ble_mesh_state_change_cfg_mod_pub_set_t::cred_flag (C++ member), 504
esp_ble_mesh_state_change_cfg_mod_pub_set_t::element_addr (C++ member), 504
esp_ble_mesh_state_change_cfg_mod_pub_set_t::model_id (C++ member), 505
esp_ble_mesh_state_change_cfg_mod_pub_set_t::pub_addr (C++ member), 504
esp_ble_mesh_state_change_cfg_mod_pub_set_t::pub_app_idx (C++ member), 505
esp_ble_mesh_state_change_cfg_mod_pub_set_t::pub_period (C++ member), 505
esp_ble_mesh_state_change_cfg_mod_pub_set_t::pub_retransmit (C++ member), 505
esp_ble_mesh_state_change_cfg_mod_pub_set_t::pub_ttl (C++ member), 505
esp_ble_mesh_state_change_cfg_model_app_bind_t (C++ struct), 507
esp_ble_mesh_state_change_cfg_model_app_bind_t::app_idx (C++ member), 507
esp_ble_mesh_state_change_cfg_model_app_bind_t::company_id (C++ member), 507
esp_ble_mesh_state_change_cfg_model_app_bind_t::element_addr (C++ member), 507
esp_ble_mesh_state_change_cfg_model_app_bind_t::model_id (C++ member), 507
esp_ble_mesh_state_change_cfg_model_app_unbind_t (C++ struct), 507
esp_ble_mesh_state_change_cfg_model_app_unbind_t::app_idx (C++ member), 508
esp_ble_mesh_state_change_cfg_model_app_unbind_t::company_id (C++ member), 508
esp_ble_mesh_state_change_cfg_model_app_unbind_t::element_addr (C++ member), 508
esp_ble_mesh_state_change_cfg_model_app_unbind_t:

(C++ member), 508
esp_ble_mesh_state_change_cfg_model_sub_add_t (C++ struct), 505
esp_ble_mesh_state_change_cfg_model_sub_add_t::company_id (C++ member), 505
esp_ble_mesh_state_change_cfg_model_sub_add_t::element_addr (C++ member), 505
esp_ble_mesh_state_change_cfg_model_sub_add_t::model_id (C++ member), 505
esp_ble_mesh_state_change_cfg_model_sub_add_t::sub_addr (C++ member), 505
esp_ble_mesh_state_change_cfg_model_sub_delete_t (C++ struct), 505
esp_ble_mesh_state_change_cfg_model_sub_delete_t::company_id (C++ member), 505
esp_ble_mesh_state_change_cfg_model_sub_delete_t::element_addr (C++ member), 505
esp_ble_mesh_state_change_cfg_model_sub_delete_t::model_id (C++ member), 506
esp_ble_mesh_state_change_cfg_model_sub_delete_t::sub_addr (C++ member), 505
esp_ble_mesh_state_change_cfg_netkey_add_t (C++ struct), 506
esp_ble_mesh_state_change_cfg_netkey_add_t::net_idx (C++ member), 506
esp_ble_mesh_state_change_cfg_netkey_add_t::netkey (C++ member), 506
esp_ble_mesh_state_change_cfg_netkey_delete_t (C++ struct), 506
esp_ble_mesh_state_change_cfg_netkey_delete_t::net_idx (C++ member), 506
esp_ble_mesh_state_change_cfg_netkey_update_t (C++ struct), 506
esp_ble_mesh_state_change_cfg_netkey_update_t::net_idx (C++ member), 506
esp_ble_mesh_state_change_gen_admin_property_set_t (C++ struct), 548
esp_ble_mesh_state_change_gen_admin_property_set_t::access (C++ member), 548
esp_ble_mesh_state_change_gen_admin_property_set_t::admin_property (C++ member), 548
esp_ble_mesh_state_change_gen_admin_property_set_t::value (C++ member), 548
esp_ble_mesh_state_change_gen_def_trans_time_set_t (C++ struct), 546
esp_ble_mesh_state_change_gen_def_trans_time_set_t::trans_time (C++ member), 546
esp_ble_mesh_state_change_gen_delta_set_t (C++ struct), 546
esp_ble_mesh_state_change_gen_delta_set_t::level (C++ member), 546
esp_ble_mesh_state_change_gen_level_set_t (C++ struct), 546
esp_ble_mesh_state_change_gen_level_set_t::level (C++ member), 546
esp_ble_mesh_state_change_gen_loc_global_set_t (C++ struct), 547
esp_ble_mesh_state_change_gen_loc_global_set_t::altitude (C++ member), 547
esp_ble_mesh_state_change_gen_loc_global_set_t::global_latitude (C++ member), 547
esp_ble_mesh_state_change_gen_loc_global_set_t::global_longitude (C++ member), 547
esp_ble_mesh_state_change_gen_loc_local_set_t (C++ struct), 548
esp_ble_mesh_state_change_gen_loc_local_set_t::altitude (C++ member), 548
esp_ble_mesh_state_change_gen_loc_local_set_t::east_offset (C++ member), 548
esp_ble_mesh_state_change_gen_loc_local_set_t::floor (C++ member), 548
esp_ble_mesh_state_change_gen_loc_local_set_t::north_offset (C++ member), 548
esp_ble_mesh_state_change_gen_loc_local_set_t::uncertainty (C++ member), 548
esp_ble_mesh_state_change_gen_manu_property_set_t (C++ struct), 549
esp_ble_mesh_state_change_gen_manu_property_set_t::access (C++ member), 549
esp_ble_mesh_state_change_gen_manu_property_set_t::manu_property (C++ member), 549
esp_ble_mesh_state_change_gen_move_set_t (C++ struct), 546
esp_ble_mesh_state_change_gen_move_set_t::level (C++ member), 546
esp_ble_mesh_state_change_gen_onoff_set_t (C++ struct), 546
esp_ble_mesh_state_change_gen_onoff_set_t::onoff (C++ member), 546
esp_ble_mesh_state_change_gen_onpowerup_set_t (C++ struct), 546
esp_ble_mesh_state_change_gen_onpowerup_set_t::onpowerup (C++ member), 547
esp_ble_mesh_state_change_gen_power_default_set_t (C++ struct), 547
esp_ble_mesh_state_change_gen_power_default_set_t::power (C++ member), 547
esp_ble_mesh_state_change_gen_power_level_set_t (C++ struct), 547
esp_ble_mesh_state_change_gen_power_level_set_t::power (C++ member), 547
esp_ble_mesh_state_change_gen_power_range_set_t (C++ struct), 547
esp_ble_mesh_state_change_gen_power_range_set_t::range_max (C++ member), 547
esp_ble_mesh_state_change_gen_power_range_set_t::range_min (C++ member), 547
esp_ble_mesh_state_change_gen_user_property_set_t (C++ struct), 548
esp_ble_mesh_state_change_gen_user_property_set_t::access (C++ member), 548
esp_ble_mesh_state_change_gen_user_property_set_t::user_property (C++ member), 548
esp_ble_mesh_state_change_light_ctl_default_set_t

(C++ *struct*), 647
esp_ble_mesh_state_change_light_ctl_default_set_t::data (C++ *member*), 648
esp_ble_mesh_state_change_light_ctl_default_set_t::delta_uv (C++ *member*), 648
esp_ble_mesh_state_change_light_ctl_default_set_t::lightness (C++ *member*), 648
esp_ble_mesh_state_change_light_ctl_default_set_t::op_en (C++ *member*), 648
esp_ble_mesh_state_change_light_ctl_default_set_t::tid (C++ *member*), 648
esp_ble_mesh_state_change_light_ctl_set_t (C++ *struct*), 647
esp_ble_mesh_state_change_light_ctl_set_t::delay (C++ *member*), 647
esp_ble_mesh_state_change_light_ctl_set_t::lightness (C++ *member*), 647
esp_ble_mesh_state_change_light_ctl_set_t::op_en (C++ *member*), 647
esp_ble_mesh_state_change_light_ctl_set_t::temperature (C++ *member*), 647
esp_ble_mesh_state_change_light_ctl_set_t::tid (C++ *member*), 647
esp_ble_mesh_state_change_light_ctl_temp_set_t (C++ *struct*), 647
esp_ble_mesh_state_change_light_ctl_temp_set_t::delay (C++ *member*), 647
esp_ble_mesh_state_change_light_ctl_temp_set_t::op_en (C++ *member*), 647
esp_ble_mesh_state_change_light_ctl_temp_set_t::tid (C++ *member*), 647
esp_ble_mesh_state_change_light_ctl_temp_set_t::uv (C++ *member*), 647
esp_ble_mesh_state_change_light_hsl_default_set_t (C++ *struct*), 648
esp_ble_mesh_state_change_light_hsl_default_set_t::data (C++ *member*), 649
esp_ble_mesh_state_change_light_hsl_default_set_t::lightness (C++ *member*), 649
esp_ble_mesh_state_change_light_hsl_default_set_t::op_en (C++ *member*), 649
esp_ble_mesh_state_change_light_hsl_default_set_t::saturation (C++ *member*), 649
esp_ble_mesh_state_change_light_hsl_hue_set_t (C++ *struct*), 648
esp_ble_mesh_state_change_light_hsl_hue_set_t::delay (C++ *member*), 648
esp_ble_mesh_state_change_light_hsl_range_set_t (C++ *struct*), 649
esp_ble_mesh_state_change_light_hsl_range_set_t::hue_range_max (C++ *member*), 649
esp_ble_mesh_state_change_light_hsl_range_set_t::hue_range_min (C++ *member*), 649
esp_ble_mesh_state_change_light_hsl_range_set_t::saturation_range_max (C++ *member*), 649
esp_ble_mesh_state_change_light_hsl_range_set_t::saturation_range_min (C++ *member*), 649
esp_ble_mesh_state_change_light_hsl_saturation_set_t (C++ *struct*), 648
esp_ble_mesh_state_change_light_hsl_saturation_set_t::delay (C++ *member*), 648
esp_ble_mesh_state_change_light_hsl_saturation_set_t::op_en (C++ *member*), 648
esp_ble_mesh_state_change_light_hsl_set_t (C++ *struct*), 648
esp_ble_mesh_state_change_light_hsl_set_t::delay (C++ *member*), 648
esp_ble_mesh_state_change_light_hsl_set_t::hue (C++ *member*), 648
esp_ble_mesh_state_change_light_hsl_set_t::lightness (C++ *member*), 648
esp_ble_mesh_state_change_light_hsl_set_t::op_en (C++ *member*), 648
esp_ble_mesh_state_change_light_hsl_set_t::saturation (C++ *member*), 648
esp_ble_mesh_state_change_light_hsl_set_t::tid (C++ *member*), 648
esp_ble_mesh_state_change_light_hsl_target_global_t (C++ *struct*), 649
esp_ble_mesh_state_change_light_hsl_target_global_t::delay (C++ *member*), 649
esp_ble_mesh_state_change_light_hsl_target_global_t::hue (C++ *member*), 649
esp_ble_mesh_state_change_light_hsl_target_global_t::lightness (C++ *member*), 649
esp_ble_mesh_state_change_light_hsl_target_global_t::saturation (C++ *member*), 649
esp_ble_mesh_state_change_light_hsl_target_global_t::tid (C++ *member*), 649
esp_ble_mesh_state_change_light_hsl_target_global_t::trans_time (C++ *member*), 649
esp_ble_mesh_state_change_light_hsl_target_local_t (C++ *struct*), 649
esp_ble_mesh_state_change_light_hsl_target_local_t::delay (C++ *member*), 649
esp_ble_mesh_state_change_light_hsl_target_local_t::hue (C++ *member*), 649
esp_ble_mesh_state_change_light_hsl_target_local_t::lightness (C++ *member*), 649
esp_ble_mesh_state_change_light_hsl_target_local_t::saturation (C++ *member*), 649
esp_ble_mesh_state_change_light_hsl_target_local_t::tid (C++ *member*), 649
esp_ble_mesh_state_change_light_hsl_target_local_t::trans_time (C++ *member*), 649
esp_ble_mesh_state_change_light_lc_light_onoff_set_t (C++ *struct*), 650
esp_ble_mesh_state_change_light_lc_light_onoff_set_t::op_en (C++ *member*), 650
esp_ble_mesh_state_change_light_lc_light_onoff_set_t::tid (C++ *member*), 650
esp_ble_mesh_state_change_light_lc_mode_set_t (C++ *struct*), 650
esp_ble_mesh_state_change_light_lc_mode_set_t::mode (C++ *member*), 650
esp_ble_mesh_state_change_light_lc_om_set_t (C++ *struct*), 650
esp_ble_mesh_state_change_light_lc_om_set_t::mode (C++ *member*), 650
esp_ble_mesh_state_change_light_lc_property_set_t (C++ *struct*), 651
esp_ble_mesh_state_change_light_lc_property_set_t::property_id (C++ *member*), 651
esp_ble_mesh_state_change_light_lc_property_set_t::property_value (C++ *member*), 651
esp_ble_mesh_state_change_light_lightness_default_set_t (C++ *struct*), 646
esp_ble_mesh_state_change_light_lightness_default_set_t::delay (C++ *member*), 646
esp_ble_mesh_state_change_light_lightness_linear_set_t (C++ *struct*), 646
esp_ble_mesh_state_change_light_lightness_linear_set_t::delay (C++ *member*), 646
esp_ble_mesh_state_change_light_lightness_range_set_t (C++ *struct*), 646
esp_ble_mesh_state_change_light_lightness_range_set_t::lightness_range_max (C++ *member*), 647
esp_ble_mesh_state_change_light_lightness_range_set_t::lightness_range_min (C++ *member*), 647
esp_ble_mesh_state_change_light_lightness_range_set_t::op_en (C++ *member*), 647
esp_ble_mesh_state_change_light_lightness_set_t (C++ *struct*), 646
esp_ble_mesh_state_change_light_lightness_set_t::delay (C++ *member*), 646
esp_ble_mesh_state_change_light_xyl_default_set_t (C++ *struct*), 649
esp_ble_mesh_state_change_light_xyl_default_set_t::delay (C++ *member*), 650
esp_ble_mesh_state_change_light_xyl_default_set_t::op_en (C++ *member*), 650
esp_ble_mesh_state_change_light_xyl_default_set_t::tid (C++ *member*), 650
esp_ble_mesh_state_change_light_xyl_default_set_t::trans_time (C++ *member*), 650
esp_ble_mesh_state_change_light_xyl_range_set_t (C++ *struct*), 650
esp_ble_mesh_state_change_light_xyl_range_set_t::op_en (C++ *member*), 650
esp_ble_mesh_state_change_light_xyl_range_set_t::tid (C++ *member*), 650
esp_ble_mesh_state_change_light_xyl_range_set_t::trans_time (C++ *member*), 650
esp_ble_mesh_state_change_light_xyl_set_t (C++ *struct*), 650
esp_ble_mesh_state_change_light_xyl_set_t::delay (C++ *member*), 650
esp_ble_mesh_state_change_light_xyl_set_t::lightness (C++ *member*), 650
esp_ble_mesh_state_change_light_xyl_set_t::op_en (C++ *member*), 650
esp_ble_mesh_state_change_light_xyl_set_t::tid (C++ *member*), 650
esp_ble_mesh_state_change_light_xyl_set_t::trans_time (C++ *member*), 650
esp_ble_mesh_state_change_light_xyl_set_t::x (C++ *member*), 650
esp_ble_mesh_state_change_light_xyl_set_t::y (C++ *member*), 650
esp_ble_mesh_state_change_light_xyl_target_global_t (C++ *struct*), 651
esp_ble_mesh_state_change_light_xyl_target_global_t::delay (C++ *member*), 651
esp_ble_mesh_state_change_light_xyl_target_global_t::lightness (C++ *member*), 651
esp_ble_mesh_state_change_light_xyl_target_global_t::op_en (C++ *member*), 651
esp_ble_mesh_state_change_light_xyl_target_global_t::tid (C++ *member*), 651
esp_ble_mesh_state_change_light_xyl_target_global_t::trans_time (C++ *member*), 651
esp_ble_mesh_state_change_light_xyl_target_global_t::x (C++ *member*), 651
esp_ble_mesh_state_change_light_xyl_target_global_t::y (C++ *member*), 651
esp_ble_mesh_state_change_light_xyl_target_local_t (C++ *struct*), 651
esp_ble_mesh_state_change_light_xyl_target_local_t::delay (C++ *member*), 651
esp_ble_mesh_state_change_light_xyl_target_local_t::lightness (C++ *member*), 651
esp_ble_mesh_state_change_light_xyl_target_local_t::op_en (C++ *member*), 651
esp_ble_mesh_state_change_light_xyl_target_local_t::tid (C++ *member*), 651
esp_ble_mesh_state_change_light_xyl_target_local_t::trans_time (C++ *member*), 651
esp_ble_mesh_state_change_light_xyl_target_local_t::x (C++ *member*), 651
esp_ble_mesh_state_change_light_xyl_target_local_t::y (C++ *member*), 651
esp_ble_mesh_state_change_onoff_set_t (C++ *struct*), 651
esp_ble_mesh_state_change_onoff_set_t::delay (C++ *member*), 651
esp_ble_mesh_state_change_onoff_set_t::onoff (C++ *member*), 651
esp_ble_mesh_state_change_onoff_set_t::op_en (C++ *member*), 651
esp_ble_mesh_state_change_onoff_set_t::tid (C++ *member*), 651
esp_ble_mesh_state_change_onoff_set_t::trans_time (C++ *member*), 651
esp_ble_mesh_state_change_onoff_set_t::trans_time (C++ *member*), 651
esp_ble_mesh_state_change_onoff_target_global_t (C++ *struct*), 652
esp_ble_mesh_state_change_onoff_target_global_t::delay (C++ *member*), 652
esp_ble_mesh_state_change_onoff_target_global_t::onoff (C++ *member*), 652
esp_ble_mesh_state_change_onoff_target_global_t::op_en (C++ *member*), 652
esp_ble_mesh_state_change_onoff_target_global_t::tid (C++ *member*), 652
esp_ble_mesh_state_change_onoff_target_global_t::trans_time (C++ *member*), 652
esp_ble_mesh_state_change_onoff_target_local_t (C++ *struct*), 652
esp_ble_mesh_state_change_onoff_target_local_t::delay (C++ *member*), 652
esp_ble_mesh_state_change_onoff_target_local_t::onoff (C++ *member*), 652
esp_ble_mesh_state_change_onoff_target_local_t::op_en (C++ *member*), 652
esp_ble_mesh_state_change_onoff_target_local_t::tid (C++ *member*), 652
esp_ble_mesh_state_change_onoff_target_local_t::trans_time (C++ *member*), 652
esp_ble_mesh_state_change_time_set_t (C++ *struct*), 652
esp_ble_mesh_state_change_time_set_t::day (C++ *member*), 652
esp_ble_mesh_state_change_time_set_t::daylight_save (C++ *member*), 652
esp_ble_mesh_state_change_time_set_t::hour (C++ *member*), 652
esp_ble_mesh_state_change_time_set_t::minute (C++ *member*), 652
esp_ble_mesh_state_change_time_set_t::second (C++ *member*), 652
esp_ble_mesh_state_change_time_set_t::time_authority (C++ *member*), 652
esp_ble_mesh_state_change_time_set_t::time_zone_offset (C++ *member*), 652
esp_ble_mesh_state_change_time_set_t::tai_seconds (C++ *member*), 652
esp_ble_mesh_state_change_time_set_t::year (C++ *member*), 652
esp_ble_mesh_state_change_time_status_t (C++ *struct*), 652
esp_ble_mesh_state_change_time_status_t::day (C++ *member*), 652
esp_ble_mesh_state_change_time_status_t::daylight_save (C++ *member*), 652
esp_ble_mesh_state_change_time_status_t::hour (C++ *member*), 652
esp_ble_mesh_state_change_time_status_t::minute (C++ *member*), 652
esp_ble_mesh_state_change_time_status_t::second (C++ *member*), 652
esp_ble_mesh_state_change_time_status_t::time_authority (C++ *member*), 652
esp_ble_mesh_state_change_time_status_t::time_zone_offset (C++ *member*), 652
esp_ble_mesh_state_change_time_status_t::tai_seconds (C++ *member*), 652
esp_ble_mesh_state_change_time_status_t::year (C++ *member*), 652
esp_ble_mesh_state_change_time_zone_set_t (C++ *struct*), 653
esp_ble_mesh_state_change_time_zone_set_t::time_zone_offset_new (C++ *member*), 653
esp_ble_mesh_state_change_time_zone_set_t::tai_of_zone_change (C++ *member*), 653
esp_ble_mesh_state_change_time_zone_status_t (C++ *struct*), 653
esp_ble_mesh_state_change_time_zone_status_t::time_zone_offset_current (C++ *member*), 653
esp_ble_mesh_state_change_time_zone_status_t::time_zone_offset_new (C++ *member*), 653
esp_ble_mesh_state_change_time_zone_status_t::tai_of_zone_change (C++ *member*), 653
esp_ble_mesh_state_change_tt_delta_set_t (C++ *struct*), 653
esp_ble_mesh_state_change_tt_delta_set_t::delta_change (C++ *member*), 653
esp_ble_mesh_state_change_tt_delta_set_t::delta_change (C++ *member*), 653
esp_ble_mesh_state_change_tt_delta_set_t::trans_time (C++ *member*), 653
esp_ble_mesh_state_change_tt_delta_set_t::trans_time (C++ *member*), 653
esp_ble_mesh_state_change_tt_delta_set_t::tt_delta_change (C++ *member*), 653
esp_ble_mesh_state_change_tt_delta_set_t::tt_delta_change (C++ *member*), 653
esp_ble_mesh_state_change_tt_set_t (C++ *struct*), 653
esp_ble_mesh_state_change_tt_set_t::tai_seconds (C++ *member*), 653
esp_ble_mesh_state_change_tt_set_t::subsecond (C++ *member*), 653
esp_ble_mesh_state_change_tt_set_t::tai_seconds (C++ *member*), 653
esp_ble_mesh_state_change_tt_set_t::time_authority (C++ *member*), 653
esp_ble_mesh_state_change_tt_set_t::time_authority (C++ *member*), 653
esp_ble_mesh_state_change_tt_set_t::uncertainty (C++ *member*), 653
esp_ble_mesh_state_change_tt_set_t::uncertainty (C++ *member*), 653
esp_ble_mesh_state_change_tt_status_t (C++ *struct*), 653
esp_ble_mesh_state_change_tt_status_t::tai_seconds (C++ *member*), 653
esp_ble_mesh_state_change_tt_status_t::subsecond (C++ *member*), 653
esp_ble_mesh_state_change_tt_status_t::tai_seconds (C++ *member*), 653
esp_ble_mesh_state_change_tt_status_t::time_authority (C++ *member*), 653
esp_ble_mesh_state_change_tt_status_t::time_authority (C++ *member*), 653
esp_ble_mesh_state_change_tt_status_t::uncertainty (C++ *member*), 653
esp_ble_mesh_state_change_tt_status_t::uncertainty (C++ *member*), 653
esp_ble_mesh_state_change_vendor_model_set_t (C++ *struct*), 654
esp_ble_mesh_state_change_vendor_model_set_t::data (C++ *member*), 654
esp_ble_mesh_state_change_vendor_model_set_t::length (C++ *member*), 654
esp_ble_mesh_state_change_vendor_model_set_t::op_en (C++ *member*), 654
esp_ble_mesh_state_change_vendor_model_set_t::tid (C++ *member*), 654
esp_ble_mesh_state_change_vendor_model_set_t::trans_time (C++ *member*), 654
esp_ble_mesh_state_change_vendor_model_status_t (C++ *struct*), 654
esp_ble_mesh_state_change_vendor_model_status_t::data (C++ *member*), 654
esp_ble_mesh_state_change_vendor_model_status_t::length (C++ *member*), 654
esp_ble_mesh_state_change_vendor_model_status_t::op_en (C++ *member*), 654
esp_ble_mesh_state_change_vendor_model_status_t::tid (C++ *member*), 654
esp_ble_mesh_state_change_vendor_model_status_t::trans_time (C++ *member*), 654
esp_ble_mesh_state_change_vendor_model_status_t::trans_time (C++ *member*), 654
esp_ble_mesh_state_change_vendor_model_status_t::tt_delta_change (C++ *member*), 654
esp_ble_mesh_state_change_vendor_model_status_t::tt_delta_change (C++ *member*), 654
esp_ble_mesh_state_change_vendor_model_status_t::uncertainty (C++ *member*), 654
esp_ble_mesh_state_change_vendor_model_status_t::uncertainty (C++ *member*), 654
esp_ble_mesh_state_change_vendor_model_status_t::value_fixed (C++ *member*), 654
esp_ble_mesh_state_change_vendor_model_status_t::value_fixed (C++ *member*), 654
esp_ble_mesh_state_change_vendor_model_status_t::value_variable (C++ *member*), 654
esp_ble_mesh_state_change_vendor_model_status_t::value_variable (C++ *member*), 654
esp_ble_mesh_state_change_vendor_model_value_t (C++ *union*), 654
esp_ble_mesh_state_change_vendor_model_value_t::value_fixed (C++ *member*), 654
esp_ble_mesh_state_change_vendor_model_value_t::value_variable

(C++ *struct*), 649
esp_ble_mesh_state_change_light_xyl_set_t::lightness
(C++ *member*), 649
esp_ble_mesh_state_change_light_xyl_set_t::x
(C++ *member*), 649
esp_ble_mesh_state_change_light_xyl_set_t::y
(C++ *member*), 649
esp_ble_mesh_state_change_scene_delete_t
(C++ *struct*), 599
esp_ble_mesh_state_change_scene_delete_t::scene_number
(C++ *member*), 599
esp_ble_mesh_state_change_scene_recall_t
(C++ *struct*), 599
esp_ble_mesh_state_change_scene_recall_t::scene_number
(C++ *member*), 599
esp_ble_mesh_state_change_scene_store_t
(C++ *struct*), 599
esp_ble_mesh_state_change_scene_store_t::scene_number
(C++ *member*), 599
esp_ble_mesh_state_change_scheduler_act_set_t
(C++ *struct*), 599
esp_ble_mesh_state_change_scheduler_act_set_t::action
(C++ *member*), 600
esp_ble_mesh_state_change_scheduler_act_set_t::day
(C++ *member*), 600
esp_ble_mesh_state_change_scheduler_act_set_t::day_of_week
(C++ *member*), 600
esp_ble_mesh_state_change_scheduler_act_set_t::hour
(C++ *member*), 600
esp_ble_mesh_state_change_scheduler_act_set_t::index
(C++ *member*), 600
esp_ble_mesh_state_change_scheduler_act_set_t::minute
(C++ *member*), 600
esp_ble_mesh_state_change_scheduler_act_set_t::month
(C++ *member*), 600
esp_ble_mesh_state_change_scheduler_act_set_t::scene_number
(C++ *member*), 600
esp_ble_mesh_state_change_scheduler_act_set_t::second
(C++ *member*), 600
esp_ble_mesh_state_change_scheduler_act_set_t::year
(C++ *member*), 600
esp_ble_mesh_state_change_sensor_cadence_set_t
(C++ *struct*), 573
esp_ble_mesh_state_change_sensor_cadence_set_t::fast_cadence_high
(C++ *member*), 574
esp_ble_mesh_state_change_sensor_cadence_set_t::fast_cadence_low
(C++ *member*), 573
esp_ble_mesh_state_change_sensor_cadence_set_t::min_interval
(C++ *member*), 573
esp_ble_mesh_state_change_sensor_cadence_set_t::property_id
(C++ *member*), 573
esp_ble_mesh_state_change_sensor_cadence_set_t::status_trigger_delta_down
(C++ *member*), 573
esp_ble_mesh_state_change_sensor_cadence_set_t::status_trigger_delta_up
(C++ *member*), 573
esp_ble_mesh_state_change_sensor_setting_set_t
(C++ *struct*), 574
esp_ble_mesh_state_change_sensor_setting_set_t::property_id
(C++ *member*), 574
esp_ble_mesh_state_change_sensor_setting_set_t::sensor_setting_property_id
(C++ *member*), 574
esp_ble_mesh_state_change_sensor_setting_set_t::sensor_setting_raw
(C++ *member*), 574
esp_ble_mesh_state_change_sensor_status_t
(C++ *struct*), 651
esp_ble_mesh_state_change_sensor_status_t::ambient_illuminance
(C++ *member*), 651
esp_ble_mesh_state_change_sensor_status_t::occupancy
(C++ *member*), 651
esp_ble_mesh_state_change_sensor_status_t::property_id
(C++ *member*), 651
esp_ble_mesh_state_change_sensor_status_t::set_occupancy
(C++ *member*), 651
esp_ble_mesh_state_change_sensor_status_t::state
(C++ *member*), 651
esp_ble_mesh_state_change_tai_utc_delta_set_t
(C++ *struct*), 599
esp_ble_mesh_state_change_tai_utc_delta_set_t::tai_utc_delta_new
(C++ *member*), 599
esp_ble_mesh_state_change_tai_utc_delta_set_t::tai_utc_delta_old
(C++ *member*), 599
esp_ble_mesh_state_change_time_role_set_t
(C++ *struct*), 599
esp_ble_mesh_state_change_time_role_set_t::time_role
(C++ *member*), 599
esp_ble_mesh_state_change_time_set_t
(C++ *struct*), 597
esp_ble_mesh_state_change_time_set_t::subsecond
(C++ *member*), 597
esp_ble_mesh_state_change_time_set_t::tai_seconds
(C++ *member*), 597
esp_ble_mesh_state_change_time_set_t::tai_utc_delta
(C++ *member*), 598
esp_ble_mesh_state_change_time_set_t::time_authority
(C++ *member*), 598
esp_ble_mesh_state_change_time_set_t::time_zone_offset
(C++ *member*), 598
esp_ble_mesh_state_change_time_set_t::uncertainty
(C++ *member*), 598
esp_ble_mesh_time_status_t
(C++ *struct*), 598
esp_ble_mesh_time_status_t::subsecond
(C++ *member*), 598
esp_ble_mesh_time_status_t::tai_seconds
(C++ *member*), 598
esp_ble_mesh_time_status_t::tai_utc_delta
(C++ *member*), 598
esp_ble_mesh_time_status_t::time_authority
(C++ *member*), 598
esp_ble_mesh_time_status_t::time_quality
(C++ *member*), 598
esp_ble_mesh_time_status_t::time_zone_offset

(C++ member), 598
esp_ble_mesh_state_change_time_status_t::current_entry
(C++ member), 598
esp_ble_mesh_state_change_time_zone_set_t
(C++ struct), 598
esp_ble_mesh_state_change_time_zone_set_t::tai_utc_change
(C++ member), 598
esp_ble_mesh_state_change_time_zone_set_t::time_zone_offset_new
(C++ member), 598
esp_ble_mesh_state_transition_t (C++ struct), 423
esp_ble_mesh_state_transition_t::BLE_MESH_ATOMIC_DEFINE
(C++ function), 424
esp_ble_mesh_state_transition_t::counter
(C++ member), 424
esp_ble_mesh_state_transition_t::delay
(C++ member), 424
esp_ble_mesh_state_transition_t::just_started
(C++ member), 424
esp_ble_mesh_state_transition_t::quo_tt
(C++ member), 424
esp_ble_mesh_state_transition_t::remain_time
(C++ member), 424
esp_ble_mesh_state_transition_t::start_timestamp
(C++ member), 424
esp_ble_mesh_state_transition_t::timer
(C++ member), 424
esp_ble_mesh_state_transition_t::total_duration
(C++ member), 424
esp_ble_mesh_state_transition_t::trans_time
(C++ member), 424
ESP_BLE_MESH_SUPPLY_VOLTAGE_TOO_HIGH_ERROR
(C macro), 518
ESP_BLE_MESH_SUPPLY_VOLTAGE_TOO_HIGH_WARNING
(C macro), 518
ESP_BLE_MESH_SUPPLY_VOLTAGE_TOO_LOW_ERROR
(C macro), 518
ESP_BLE_MESH_SUPPLY_VOLTAGE_TOO_LOW_WARNING
(C macro), 518
ESP_BLE_MESH_TAI_OF_DELTA_CHANGE_LEN
(C macro), 607
ESP_BLE_MESH_TAI_OF_ZONE_CHANGE_LEN (C macro), 607
ESP_BLE_MESH_TAI_SECONDS_LEN (C macro), 607
ESP_BLE_MESH_TAI_UTC_DELTA_MAX_VALUE
(C macro), 606
esp_ble_mesh_tai_utc_delta_set_t (C++ struct), 586
esp_ble_mesh_tai_utc_delta_set_t::padding
(C++ member), 586
esp_ble_mesh_tai_utc_delta_set_t::tai_delta_change
(C++ member), 587
esp_ble_mesh_tai_utc_delta_set_t::tai_utc_delta
(C++ member), 586
esp_ble_mesh_tai_utc_delta_status_cb_t
(C++ struct), 589
esp_ble_mesh_tai_utc_delta_status_cb_t::padding_1
(C++ member), 590
esp_ble_mesh_tai_utc_delta_status_cb_t::padding_2
(C++ member), 590
esp_ble_mesh_tai_utc_delta_status_cb_t::tai_delta
(C++ member), 590
esp_ble_mesh_tai_utc_delta_status_cb_t::tai_utc_delta
(C++ member), 590
esp_ble_mesh_tai_utc_delta_status_cb_t::time_authority
(C++ member), 590
ESP_BLE_MESH_TAMPER_ERROR (C macro), 519
ESP_BLE_MESH_TAMPER_WARNING (C macro), 519
ESP_BLE_MESH_TIME_AUTHORITY (C macro), 608
ESP_BLE_MESH_TIME_CLINET (C macro), 608
ESP_BLE_MESH_TIME_NONE (C macro), 608
ESP_BLE_MESH_TIME_RELAY (C macro), 608
esp_ble_mesh_time_role_set_t (C++ struct), 587
esp_ble_mesh_time_role_set_t::time_role
(C++ member), 587
esp_ble_mesh_time_role_status_cb_t
(C++ struct), 590
esp_ble_mesh_time_role_status_cb_t::time_role
(C++ member), 590
esp_ble_mesh_time_scene_client_cb_event_t
(C++ enum), 609
esp_ble_mesh_time_scene_client_cb_event_t::ESP_BLE_MESH_TIME_SCENE_CLIENT_GET_STATE_EVT
(C++ enumerator), 609
esp_ble_mesh_time_scene_client_cb_event_t::ESP_BLE_MESH_TIME_SCENE_CLIENT_PUBLISH_EVT
(C++ enumerator), 609
esp_ble_mesh_time_scene_client_cb_event_t::ESP_BLE_MESH_TIME_SCENE_CLIENT_SET_STATE_EVT
(C++ enumerator), 609
esp_ble_mesh_time_scene_client_cb_event_t::ESP_BLE_MESH_TIME_SCENE_CLIENT_TIMEOUT_EVT
(C++ enumerator), 609
esp_ble_mesh_time_scene_client_cb_param_t
(C++ struct), 592
esp_ble_mesh_time_scene_client_cb_param_t::error_code
(C++ member), 592
esp_ble_mesh_time_scene_client_cb_param_t::params
(C++ member), 592
esp_ble_mesh_time_scene_client_cb_param_t::status_cb
(C++ member), 592
esp_ble_mesh_time_scene_client_cb_t
(C++ type), 608
esp_ble_mesh_time_scene_client_get_state
(C++ function), 581
esp_ble_mesh_time_scene_client_get_state_t
(C++ union), 582
esp_ble_mesh_time_scene_client_get_state_t::sched_get
(C++ member), 582
esp_ble_mesh_time_scene_client_set_state
(C++ function), 582
esp_ble_mesh_time_scene_client_set_state_t
(C++ union), 582
esp_ble_mesh_time_scene_client_set_state_t::scene_set

(C++ member), 583
esp_ble_mesh_time_scene_client_set_state_t::scene_register (C++ member), 583
esp_ble_mesh_time_scene_client_set_state_t::set_time (C++ member), 583
esp_ble_mesh_time_scene_client_set_state_t::schedule_register (C++ member), 583
esp_ble_mesh_time_scene_client_set_state_t::tai_utc_delta_set (C++ member), 583
esp_ble_mesh_time_scene_client_set_state_t::time_set (C++ member), 582
esp_ble_mesh_time_scene_client_set_state_t::time_zone_set (C++ member), 583
esp_ble_mesh_time_scene_client_status_cb_t (C++ union), 583
esp_ble_mesh_time_scene_client_status_cb_t::scene_register_status (C++ member), 583
esp_ble_mesh_time_scene_client_status_cb_t::scene_status (C++ member), 583
esp_ble_mesh_time_scene_client_status_cb_t::schedule_register_status (C++ member), 584
esp_ble_mesh_time_scene_client_status_cb_t::tai_utc_delta_status (C++ member), 583
esp_ble_mesh_time_scene_client_status_cb_t::time_status (C++ member), 583
esp_ble_mesh_time_scene_client_status_cb_t::time_zone_status (C++ member), 583
esp_ble_mesh_time_scene_message_opcode_t (C++ type), 449
esp_ble_mesh_time_scene_server_cb_event_t (C++ enum), 609
esp_ble_mesh_time_scene_server_cb_event_t::ESP_BLE_MESH_TIME_SCENE_SERVER_EVT_MAX (C++ enumerator), 610
esp_ble_mesh_time_scene_server_cb_event_t::ESP_BLE_MESH_TIME_SCENE_SERVER_RECV_GET_MSG_EVT (C++ enumerator), 609
esp_ble_mesh_time_scene_server_cb_event_t::ESP_BLE_MESH_TIME_SCENE_SERVER_RECV_SET_MSG_EVT (C++ enumerator), 609
esp_ble_mesh_time_scene_server_cb_event_t::ESP_BLE_MESH_TIME_SCENE_SERVER_RECV_STATUS_MSG_EVT (C++ enumerator), 609
esp_ble_mesh_time_scene_server_cb_event_t::ESP_BLE_MESH_TIME_SCENE_SERVER_STATE_CHANGE_EVT (C++ enumerator), 609
esp_ble_mesh_time_scene_server_cb_param_t (C++ struct), 604
esp_ble_mesh_time_scene_server_cb_param_t::ctx (C++ member), 604
esp_ble_mesh_time_scene_server_cb_param_t::model (C++ member), 604
esp_ble_mesh_time_scene_server_cb_param_t::value (C++ member), 604
esp_ble_mesh_time_scene_server_cb_t (C++ type), 609
esp_ble_mesh_time_scene_server_cb_value_t (C++ union), 585
esp_ble_mesh_time_scene_server_cb_value_t::get (C++ member), 585
esp_ble_mesh_time_scene_server_cb_value_t::set (C++ member), 585
esp_ble_mesh_time_scene_server_cb_value_t::state_change (C++ member), 585
esp_ble_mesh_time_scene_server_cb_value_t::status (C++ member), 585
esp_ble_mesh_time_scene_server_recv_get_msg_t (C++ union), 584
esp_ble_mesh_time_scene_server_recv_get_msg_t::scene_get (C++ member), 584
esp_ble_mesh_time_scene_server_recv_set_msg_t (C++ union), 584
esp_ble_mesh_time_scene_server_recv_set_msg_t::scene_set (C++ member), 585
esp_ble_mesh_time_scene_server_recv_set_msg_t::scene_register_set (C++ member), 585
esp_ble_mesh_time_scene_server_recv_set_msg_t::scene_store (C++ member), 585
esp_ble_mesh_time_scene_server_recv_set_msg_t::schedule_register_set (C++ member), 585
esp_ble_mesh_time_scene_server_recv_set_msg_t::tai_utc_delta_set (C++ member), 585
esp_ble_mesh_time_scene_server_recv_set_msg_t::time_set (C++ member), 585
esp_ble_mesh_time_scene_server_recv_set_msg_t::time_zone_set (C++ member), 585
esp_ble_mesh_time_scene_server_recv_status_msg_t (C++ union), 585
esp_ble_mesh_time_scene_server_recv_status_msg_t::scene_register_status (C++ member), 585
esp_ble_mesh_time_scene_server_state_change_t (C++ union), 584
esp_ble_mesh_time_scene_server_state_change_t::scene_register_state (C++ member), 584
esp_ble_mesh_time_scene_server_state_change_t::scene_state (C++ member), 584
esp_ble_mesh_time_scene_server_state_change_t::time_state (C++ member), 584
esp_ble_mesh_time_scene_server_state_change_t::time_zone_state (C++ member), 584
esp_ble_mesh_time_set_t (C++ struct), 586
esp_ble_mesh_time_set_t::sub_second (C++ member), 586

esp_ble_mesh_time_set_t::tai_seconds (C++ member), 586
esp_ble_mesh_time_set_t::tai_utc_delta (C++ member), 586
esp_ble_mesh_time_set_t::time_authority (C++ member), 586
esp_ble_mesh_time_set_t::time_zone_offset (C++ member), 586
esp_ble_mesh_time_set_t::uncertainty (C++ member), 586
esp_ble_mesh_time_setup_srv_t (C++ struct), 593
esp_ble_mesh_time_setup_srv_t::model (C++ member), 593
esp_ble_mesh_time_setup_srv_t::rsp_ctrl (C++ member), 593
esp_ble_mesh_time_setup_srv_t::state (C++ member), 593
esp_ble_mesh_time_srv_t (C++ struct), 593
esp_ble_mesh_time_srv_t::model (C++ member), 593
esp_ble_mesh_time_srv_t::rsp_ctrl (C++ member), 593
esp_ble_mesh_time_srv_t::state (C++ member), 593
esp_ble_mesh_time_state_t (C++ struct), 592
esp_ble_mesh_time_state_t::subsecond (C++ member), 592
esp_ble_mesh_time_state_t::tai_delta_change (C++ member), 593
esp_ble_mesh_time_state_t::tai_seconds (C++ member), 592
esp_ble_mesh_time_state_t::tai_utc_delta_curr (C++ member), 593
esp_ble_mesh_time_state_t::tai_utc_delta_new (C++ member), 593
esp_ble_mesh_time_state_t::tai_zone_change (C++ member), 592
esp_ble_mesh_time_state_t::time (C++ member), 593
esp_ble_mesh_time_state_t::time_authority (C++ member), 592
esp_ble_mesh_time_state_t::time_role (C++ member), 593
esp_ble_mesh_time_state_t::time_zone_offset_curr (C++ member), 592
esp_ble_mesh_time_state_t::time_zone_offset_new (C++ member), 592
esp_ble_mesh_time_state_t::uncertainty (C++ member), 592
esp_ble_mesh_time_status_cb_t (C++ struct), 589
esp_ble_mesh_time_status_cb_t::sub_second (C++ member), 589
esp_ble_mesh_time_status_cb_t::tai_seconds (C++ member), 589
esp_ble_mesh_time_status_cb_t::tai_utc_delta (C++ member), 589
esp_ble_mesh_time_status_cb_t::time_authority (C++ member), 589
esp_ble_mesh_time_status_cb_t::time_zone_offset (C++ member), 589
esp_ble_mesh_time_status_cb_t::uncertainty (C++ member), 589
esp_ble_mesh_time_zone_set_t (C++ struct), 586
esp_ble_mesh_time_zone_set_t::tai_zone_change (C++ member), 586
esp_ble_mesh_time_zone_set_t::time_zone_offset_ne (C++ member), 586
esp_ble_mesh_time_zone_status_cb_t (C++ struct), 589
esp_ble_mesh_time_zone_status_cb_t::tai_zone_chan (C++ member), 589
esp_ble_mesh_time_zone_status_cb_t::time_zone_off (C++ member), 589
esp_ble_mesh_time_zone_status_cb_t::time_zone_off (C++ member), 589
ESP_BLE_MESH_TRANSMIT (C macro), 428
ESP_BLE_MESH_TTL_DEFAULT (C macro), 426
ESP_BLE_MESH_TTL_MAX (C macro), 426
ESP_BLE_MESH_UNKNOWN_TAI_DELTA_CHANGE (C macro), 606
ESP_BLE_MESH_UNKNOWN_TAI_SECONDS (C macro), 606
ESP_BLE_MESH_UNKNOWN_TAI_ZONE_CHANGE (C macro), 606
esp_ble_mesh_unprov_dev_add_t (C++ struct), 419
esp_ble_mesh_unprov_dev_add_t::addr (C++ member), 419
esp_ble_mesh_unprov_dev_add_t::addr_type (C++ member), 419
esp_ble_mesh_unprov_dev_add_t::bearer (C++ member), 420
esp_ble_mesh_unprov_dev_add_t::oob_info (C++ member), 420
esp_ble_mesh_unprov_dev_add_t::uuid (C++ member), 420
ESP_BLE_MESH_VENDOR_MODEL (C macro), 429
ESP_BLE_MESH_VIBRATION_ERROR (C macro), 518
ESP_BLE_MESH_VIBRATION_WARNING (C macro), 518
ESP_BLE_ONLY_ACCEPT_SPECIFIED_AUTH_DISABLE (C macro), 208
ESP_BLE_ONLY_ACCEPT_SPECIFIED_AUTH_ENABLE (C macro), 208
ESP_BLE_OOB_DISABLE (C macro), 208
ESP_BLE_OOB_ENABLE (C macro), 208
esp_ble_oob_req_reply (C++ function), 172
esp_ble_passkey_reply (C++ function), 171
esp_ble_pcsrk_keys_t (C++ struct), 197
esp_ble_pcsrk_keys_t::counter (C++ member), 197
esp_ble_pcsrk_keys_t::csrk (C++ member),

197
esp_ble_pcsrk_keys_t::sec_level (C++ member), 197
esp_ble_penc_keys_t (C++ struct), 196
esp_ble_penc_keys_t::ediv (C++ member), 197
esp_ble_penc_keys_t::key_size (C++ member), 197
esp_ble_penc_keys_t::ltk (C++ member), 197
esp_ble_penc_keys_t::rand (C++ member), 197
esp_ble_penc_keys_t::sec_level (C++ member), 197
esp_ble_pid_keys_t (C++ struct), 197
esp_ble_pid_keys_t::addr_type (C++ member), 197
esp_ble_pid_keys_t::irk (C++ member), 197
esp_ble_pid_keys_t::static_addr (C++ member), 197
esp_ble_pkt_data_length_params_t (C++ struct), 196
esp_ble_pkt_data_length_params_t::rx_len (C++ member), 196
esp_ble_pkt_data_length_params_t::tx_len (C++ member), 196
esp_ble_power_type_t (C++ enum), 158
esp_ble_power_type_t::ESP_BLE_PWR_TYPE_ADV (C++ enumerator), 159
esp_ble_power_type_t::ESP_BLE_PWR_TYPE_CONN_HDL0 (C++ enumerator), 158
esp_ble_power_type_t::ESP_BLE_PWR_TYPE_CONN_HDL1 (C++ enumerator), 158
esp_ble_power_type_t::ESP_BLE_PWR_TYPE_CONN_HDL2 (C++ enumerator), 158
esp_ble_power_type_t::ESP_BLE_PWR_TYPE_CONN_HDL3 (C++ enumerator), 158
esp_ble_power_type_t::ESP_BLE_PWR_TYPE_CONN_HDL4 (C++ enumerator), 158
esp_ble_power_type_t::ESP_BLE_PWR_TYPE_CONN_HDL5 (C++ enumerator), 158
esp_ble_power_type_t::ESP_BLE_PWR_TYPE_CONN_HDL6 (C++ enumerator), 158
esp_ble_power_type_t::ESP_BLE_PWR_TYPE_CONN_HDL7 (C++ enumerator), 158
esp_ble_power_type_t::ESP_BLE_PWR_TYPE_CONN_HDL8 (C++ enumerator), 158
esp_ble_power_type_t::ESP_BLE_PWR_TYPE_DEFAULT (C++ enumerator), 159
esp_ble_power_type_t::ESP_BLE_PWR_TYPE_NUM (C++ enumerator), 159
esp_ble_power_type_t::ESP_BLE_PWR_TYPE_SCAN (C++ enumerator), 159
ESP_BLE_PRIM_ADV_INT_MAX (C macro), 161
ESP_BLE_PRIM_ADV_INT_MIN (C macro), 161
esp_ble_remove_bond_device (C++ function), 171
esp_ble_resolve_adv_data (C++ function), 169
esp_ble_scan_dupilcate_list_flush (C++ function), 154
esp_ble_scan_duplicate_t (C++ enum), 224
esp_ble_scan_duplicate_t::BLE_SCAN_DUPLICATE_DISA (C++ enumerator), 225
esp_ble_scan_duplicate_t::BLE_SCAN_DUPLICATE_ENAB (C++ enumerator), 225
esp_ble_scan_duplicate_t::BLE_SCAN_DUPLICATE_MAX (C++ enumerator), 225
esp_ble_scan_filter_t (C++ enum), 224
esp_ble_scan_filter_t::BLE_SCAN_FILTER_ALLOW_ALL (C++ enumerator), 224
esp_ble_scan_filter_t::BLE_SCAN_FILTER_ALLOW_ONLY (C++ enumerator), 224
esp_ble_scan_filter_t::BLE_SCAN_FILTER_ALLOW_UND_ (C++ enumerator), 224
esp_ble_scan_filter_t::BLE_SCAN_FILTER_ALLOW_WLIS (C++ enumerator), 224
ESP_BLE_SCAN_PARAM_UNDEF (C macro), 161
esp_ble_scan_params_t (C++ struct), 195
esp_ble_scan_params_t::own_addr_type (C++ member), 195
esp_ble_scan_params_t::scan_duplicate (C++ member), 195
esp_ble_scan_params_t::scan_filter_policy (C++ member), 195
esp_ble_scan_params_t::scan_interval (C++ member), 195
esp_ble_scan_params_t::scan_type (C++ member), 195
esp_ble_scan_params_t::scan_window (C++ member), 195
ESP_BLE_SCAN_RSP_DATA_LEN_MAX (C macro), 212
esp_ble_scan_type_t (C++ enum), 224
esp_ble_scan_type_t::BLE_SCAN_TYPE_ACTIVE (C++ enumerator), 224
esp_ble_scan_type_t::BLE_SCAN_TYPE_PASSIVE (C++ enumerator), 224
esp_ble_sec_act_t (C++ enum), 222
esp_ble_sec_act_t::ESP_BLE_SEC_ENCRYPT (C++ enumerator), 223
esp_ble_sec_act_t::ESP_BLE_SEC_ENCRYPT_MITM (C++ enumerator), 223
esp_ble_sec_act_t::ESP_BLE_SEC_ENCRYPT_NO_MITM (C++ enumerator), 223
esp_ble_sec_key_notif_t (C++ struct), 198
esp_ble_sec_key_notif_t::bd_addr (C++ member), 198
esp_ble_sec_key_notif_t::passkey (C++ member), 198
esp_ble_sec_req_t (C++ struct), 199
esp_ble_sec_req_t::bd_addr (C++ member), 199
esp_ble_sec_t (C++ union), 177
esp_ble_sec_t::auth_cmpl (C++ member), 177

esp_ble_sec_t::ble_id_keys (*C++ member*), 177
esp_ble_sec_t::ble_key (*C++ member*), 177
esp_ble_sec_t::ble_req (*C++ member*), 177
esp_ble_sec_t::key_notif (*C++ member*), 177
esp_ble_set_encryption (*C++ function*), 171
esp_ble_sm_param_t (*C++ enum*), 223
esp_ble_sm_param_t::ESP_BLE_APP_ENC_KEY_SIZE (*C++ enumerator*), 224
esp_ble_sm_param_t::ESP_BLE_SM_AUTHEN_REQ_MODE (*C++ enumerator*), 223
esp_ble_sm_param_t::ESP_BLE_SM_CLEAR_STATIC_PASSKEY (*C++ enumerator*), 223
esp_ble_sm_param_t::ESP_BLE_SM_IOCAP_MODE (*C++ enumerator*), 223
esp_ble_sm_param_t::ESP_BLE_SM_MAX_KEY_SIZE (*C++ enumerator*), 223
esp_ble_sm_param_t::ESP_BLE_SM_MAX_PARAM (*C++ enumerator*), 224
esp_ble_sm_param_t::ESP_BLE_SM_MIN_KEY_SIZE (*C++ enumerator*), 223
esp_ble_sm_param_t::ESP_BLE_SM_ONLY_ACCEPT_SPECIFIED_SEC_AUTH (*C++ enumerator*), 224
esp_ble_sm_param_t::ESP_BLE_SM_OOB_SUPPORT (*C++ enumerator*), 224
esp_ble_sm_param_t::ESP_BLE_SM_PASSKEY (*C++ enumerator*), 223
esp_ble_sm_param_t::ESP_BLE_SM_SET_INIT_KEY (*C++ enumerator*), 223
esp_ble_sm_param_t::ESP_BLE_SM_SET_RSP_KEY (*C++ enumerator*), 223
esp_ble_sm_param_t::ESP_BLE_SM_SET_STATIC_PASSKEY (*C++ enumerator*), 223
esp_ble_tx_power_get (*C++ function*), 151
esp_ble_tx_power_set (*C++ function*), 151
esp_ble_wl_addr_type_t (*C++ enum*), 164
esp_ble_wl_addr_type_t::BLE_WL_ADDR_TYPE_PUBLIC (*C++ enumerator*), 164
esp_ble_wl_addr_type_t::BLE_WL_ADDR_TYPE_RANDOM (*C++ enumerator*), 164
esp_ble_wl_opration_t (*C++ enum*), 226
esp_ble_wl_opration_t::ESP_BLE_WHITELIST_ADD (*C++ enumerator*), 226
esp_ble_wl_opration_t::ESP_BLE_WHITELIST_REMOVE (*C++ enumerator*), 226
esp_bluedroid_deinit (*C++ function*), 165
esp_bluedroid_disable (*C++ function*), 165
esp_bluedroid_enable (*C++ function*), 164
esp_bluedroid_get_status (*C++ function*), 164
esp_bluedroid_init (*C++ function*), 165
ESP_BLUEDROID_STATUS_CHECK (*C macro*), 161
esp_bluedroid_status_t (*C++ enum*), 165
esp_bluedroid_status_t::ESP_BLUEDROID_STATUS_ENABLED (*C++ enumerator*), 165
esp_bluedroid_status_t::ESP_BLUEDROID_STATUS_INITIALIZED (*C++ enumerator*), 165
esp_bluedroid_status_t::ESP_BLUEDROID_STATUS_UNINIT (*C++ enumerator*), 165
esp_blufi_ap_record_t (*C++ struct*), 284
esp_blufi_ap_record_t::rssi (*C++ member*), 284
esp_blufi_ap_record_t::ssid (*C++ member*), 284
ESP_BLUFI_BD_ADDR_LEN (*C macro*), 284
esp_blufi_bd_addr_t (*C++ type*), 284
esp_blufi_callbacks_t (*C++ struct*), 284
esp_blufi_callbacks_t::checksum_func (*C++ member*), 284
esp_blufi_callbacks_t::decrypt_func (*C++ member*), 284
esp_blufi_callbacks_t::encrypt_func (*C++ member*), 284
esp_blufi_callbacks_t::event_cb (*C++ member*), 284
esp_blufi_callbacks_t::negotiate_data_handler (*C++ member*), 284
esp_blufi_cb_event_t (*C++ enum*), 285
esp_blufi_cb_event_t::ESP_BLUFI_EVENT_BLE_CONNECT (*C++ enumerator*), 285
esp_blufi_cb_event_t::ESP_BLUFI_EVENT_BLE_DISCONN (*C++ enumerator*), 285
esp_blufi_cb_event_t::ESP_BLUFI_EVENT_DEAUTHENTIC (*C++ enumerator*), 286
esp_blufi_cb_event_t::ESP_BLUFI_EVENT_DEINIT_FINI (*C++ enumerator*), 285
esp_blufi_cb_event_t::ESP_BLUFI_EVENT_GET_WIFI_LI (*C++ enumerator*), 286
esp_blufi_cb_event_t::ESP_BLUFI_EVENT_GET_WIFI_ST (*C++ enumerator*), 286
esp_blufi_cb_event_t::ESP_BLUFI_EVENT_INIT_FINISH (*C++ enumerator*), 285
esp_blufi_cb_event_t::ESP_BLUFI_EVENT_RECV_CA_CER (*C++ enumerator*), 286
esp_blufi_cb_event_t::ESP_BLUFI_EVENT_RECV_CLIENT (*C++ enumerator*), 286
esp_blufi_cb_event_t::ESP_BLUFI_EVENT_RECV_CLIENT (*C++ enumerator*), 286
esp_blufi_cb_event_t::ESP_BLUFI_EVENT_RECV_CUSTOM (*C++ enumerator*), 286
esp_blufi_cb_event_t::ESP_BLUFI_EVENT_RECV_SERVER (*C++ enumerator*), 286
esp_blufi_cb_event_t::ESP_BLUFI_EVENT_RECV_SERVER (*C++ enumerator*), 286
esp_blufi_cb_event_t::ESP_BLUFI_EVENT_RECV_SLAVE_ (*C++ enumerator*), 286
esp_blufi_cb_event_t::ESP_BLUFI_EVENT_RECV_SOFTAP (*C++ enumerator*), 286
esp_blufi_cb_event_t::ESP_BLUFI_EVENT_RECV_SOFTAP (*C++ enumerator*), 286
esp_blufi_cb_event_t::ESP_BLUFI_EVENT_RECV_SOFTAP (*C++ enumerator*), 286
esp_blufi_cb_event_t::ESP_BLUFI_EVENT_RECV_SOFTAP (*C++ enumerator*), 286
esp_blufi_cb_event_t::ESP_BLUFI_EVENT_RECV_SOFTAP

(C++ enumerator), 286
esp_blufi_cb_event_t::ESP_BLUFI_EVENT_RECV_STA_BSSID (C++ enumerator), 286
esp_blufi_cb_event_t::ESP_BLUFI_EVENT_RECV_STA_PASSWD (C++ enumerator), 286
esp_blufi_cb_event_t::ESP_BLUFI_EVENT_RECV_STA_SSID (C++ enumerator), 286
esp_blufi_cb_event_t::ESP_BLUFI_EVENT_RECV_USERNAME (C++ enumerator), 286
esp_blufi_cb_event_t::ESP_BLUFI_EVENT_REPORT_ERROR (C++ enumerator), 286
esp_blufi_cb_event_t::ESP_BLUFI_EVENT_REQ_CONNECT_TO_AP (C++ enumerator), 286
esp_blufi_cb_event_t::ESP_BLUFI_EVENT_REQ_DISCONNECT_FROM_AP (C++ enumerator), 286
esp_blufi_cb_event_t::ESP_BLUFI_EVENT_SET_WIFI_OPMODE (C++ enumerator), 285
esp_blufi_cb_param_t (C++ union), 277
esp_blufi_cb_param_t::blufi_connect_evt_param (C++ struct), 278
esp_blufi_cb_param_t::blufi_connect_evt_param::is_ble (C++ member), 278
esp_blufi_cb_param_t::blufi_connect_evt_param::remote_bda (C++ member), 278
esp_blufi_cb_param_t::blufi_connect_evt_param::server_if (C++ member), 278
esp_blufi_cb_param_t::blufi_deinit_finish_evt_param (C++ struct), 278
esp_blufi_cb_param_t::blufi_deinit_finish_evt_param::state (C++ member), 278
esp_blufi_cb_param_t::blufi_disconnect_evt_param (C++ struct), 278
esp_blufi_cb_param_t::blufi_disconnect_evt_param::reserved (C++ member), 279
esp_blufi_cb_param_t::blufi_get_error_evt_param (C++ struct), 279
esp_blufi_cb_param_t::blufi_get_error_evt_param::state (C++ member), 279
esp_blufi_cb_param_t::blufi_init_finish_evt_param (C++ struct), 279
esp_blufi_cb_param_t::blufi_init_finish_evt_param::state (C++ member), 279
esp_blufi_cb_param_t::blufi_recv_ca_evt_param (C++ struct), 279
esp_blufi_cb_param_t::blufi_recv_ca_evt_param::cert (C++ member), 279
esp_blufi_cb_param_t::blufi_recv_ca_evt_param::cert_len (C++ member), 279
esp_blufi_cb_param_t::blufi_recv_client_cert_evt_param (C++ struct), 279
esp_blufi_cb_param_t::blufi_recv_client_cert_evt_param::cert (C++ member), 279
esp_blufi_cb_param_t::blufi_recv_client_cert_evt_param::cert_len (C++ member), 279
esp_blufi_cb_param_t::blufi_recv_client_pkey_evt_param (C++ struct), 279
esp_blufi_cb_param_t::blufi_recv_client_pkey_evt_param::pkey (C++ member), 280
esp_blufi_cb_param_t::blufi_recv_client_pkey_evt_param::pkey_len (C++ member), 280
esp_blufi_cb_param_t::blufi_recv_custom_data_evt_param (C++ struct), 280
esp_blufi_cb_param_t::blufi_recv_custom_data_evt_param::data (C++ member), 280
esp_blufi_cb_param_t::blufi_recv_custom_data_evt_param::data_len (C++ member), 280
esp_blufi_cb_param_t::blufi_recv_server_cert_evt_param (C++ struct), 280
esp_blufi_cb_param_t::blufi_recv_server_cert_evt_param::cert (C++ member), 280
esp_blufi_cb_param_t::blufi_recv_server_cert_evt_param::cert_len (C++ member), 280
esp_blufi_cb_param_t::blufi_recv_server_pkey_evt_param (C++ struct), 280
esp_blufi_cb_param_t::blufi_recv_server_pkey_evt_param::pkey (C++ member), 280
esp_blufi_cb_param_t::blufi_recv_server_pkey_evt_param::pkey_len (C++ member), 280
esp_blufi_cb_param_t::blufi_recv_softap_auth_mode_evt_param (C++ struct), 280
esp_blufi_cb_param_t::blufi_recv_softap_auth_mode_evt_param::auth_mode (C++ member), 281
esp_blufi_cb_param_t::blufi_recv_softap_channel_evt_param (C++ struct), 281
esp_blufi_cb_param_t::blufi_recv_softap_channel_evt_param::channel (C++ member), 281
esp_blufi_cb_param_t::blufi_recv_softap_max_conn_evt_param (C++ struct), 281
esp_blufi_cb_param_t::blufi_recv_softap_max_conn_evt_param::max_conn (C++ member), 281
esp_blufi_cb_param_t::blufi_recv_softap_passwd_evt_param (C++ struct), 281
esp_blufi_cb_param_t::blufi_recv_softap_passwd_evt_param::passwd (C++ member), 281
esp_blufi_cb_param_t::blufi_recv_softap_passwd_evt_param::passwd_len (C++ member), 281
esp_blufi_cb_param_t::blufi_recv_softap_ssid_evt_param (C++ struct), 281
esp_blufi_cb_param_t::blufi_recv_softap_ssid_evt_param::ssid (C++ member), 281
esp_blufi_cb_param_t::blufi_recv_softap_ssid_evt_param::ssid_len (C++ member), 281
esp_blufi_cb_param_t::blufi_recv_sta_bssid_evt_param (C++ struct), 281
esp_blufi_cb_param_t::blufi_recv_sta_bssid_evt_param::bssid (C++ member), 282
esp_blufi_cb_param_t::blufi_recv_sta_passwd_evt_param (C++ struct), 282
esp_blufi_cb_param_t::blufi_recv_sta_passwd_evt_param::passwd (C++ member), 282
esp_blufi_cb_param_t::blufi_recv_sta_passwd_evt_param::passwd_len (C++ member), 282
esp_blufi_cb_param_t::blufi_recv_sta_ssid_evt_param (C++ struct), 282
esp_blufi_cb_param_t::blufi_recv_sta_ssid_evt_param::ssid (C++ member), 282

esp_blufi_cb_param_t::blufi_recv_sta_ssid_evt (C++ member), 282
esp_blufi_cb_param_t::blufi_recv_username_evt (C++ struct), 282
esp_blufi_cb_param_t::blufi_recv_username_evt_param (C++ member), 282
esp_blufi_cb_param_t::blufi_recv_username_evt_t (C++ member), 282
esp_blufi_cb_param_t::blufi_set_wifi_mode_evt (C++ struct), 282
esp_blufi_cb_param_t::blufi_set_wifi_mode_evt_t (C++ member), 282
esp_blufi_cb_param_t::ca (C++ member), 278
esp_blufi_cb_param_t::client_cert (C++ member), 278
esp_blufi_cb_param_t::client_pkey (C++ member), 278
esp_blufi_cb_param_t::connect (C++ member), 277
esp_blufi_cb_param_t::custom_data (C++ member), 278
esp_blufi_cb_param_t::deinit_finish (C++ member), 277
esp_blufi_cb_param_t::disconnect (C++ member), 277
esp_blufi_cb_param_t::init_finish (C++ member), 277
esp_blufi_cb_param_t::report_error (C++ member), 278
esp_blufi_cb_param_t::server_cert (C++ member), 278
esp_blufi_cb_param_t::server_pkey (C++ member), 278
esp_blufi_cb_param_t::softap_auth_mode (C++ member), 277
esp_blufi_cb_param_t::softap_channel (C++ member), 277
esp_blufi_cb_param_t::softap_max_conn_num (C++ member), 277
esp_blufi_cb_param_t::softap_passwd (C++ member), 277
esp_blufi_cb_param_t::softap_ssid (C++ member), 277
esp_blufi_cb_param_t::sta_bssid (C++ member), 277
esp_blufi_cb_param_t::sta_passwd (C++ member), 277
esp_blufi_cb_param_t::sta_ssid (C++ member), 277
esp_blufi_cb_param_t::username (C++ member), 277
esp_blufi_cb_param_t::wifi_mode (C++ member), 277
esp_blufi_checksum_func_t (C++ type), 285
esp_blufi_decrypt_func_t (C++ type), 285
esp_blufi_deinit_state_t (C++ enum), 287
esp_blufi_deinit_state_t::ESP_BLUFI_DEINIT_FAILED (C++ enumerator), 287
esp_blufi_deinit_state_t::ESP_BLUFI_DEINIT_OK (C++ enumerator), 287
esp_blufi_encrypt_func_t (C++ type), 285
esp_blufi_error_state_t (C++ enum), 287
esp_blufi_error_state_t::ESP_BLUFI_CHECKSUM_ERROR (C++ enumerator), 287
esp_blufi_error_state_t::ESP_BLUFI_DATA_FORMAT_ER (C++ enumerator), 287
esp_blufi_error_state_t::ESP_BLUFI_DECRYPT_ERROR (C++ enumerator), 287
esp_blufi_error_state_t::ESP_BLUFI_DH_MALLOC_ERRO (C++ enumerator), 287
esp_blufi_error_state_t::ESP_BLUFI_DH_PARAM_ERROR (C++ enumerator), 287
esp_blufi_error_state_t::ESP_BLUFI_ENCRYPT_ERROR (C++ enumerator), 287
esp_blufi_error_state_t::ESP_BLUFI_INIT_SECURITY_ (C++ enumerator), 287
esp_blufi_error_state_t::ESP_BLUFI_MAKE_PUBLIC_ER (C++ enumerator), 287
esp_blufi_error_state_t::ESP_BLUFI_READ_PARAM_ERR (C++ enumerator), 287
esp_blufi_error_state_t::ESP_BLUFI_SEQUENCE_ERROR (C++ enumerator), 287
esp_blufi_event_cb_t (C++ type), 284
esp_blufi_extra_info_t (C++ struct), 283
esp_blufi_extra_info_t::softap_authmode (C++ member), 283
esp_blufi_extra_info_t::softap_authmode_set (C++ member), 283
esp_blufi_extra_info_t::softap_channel (C++ member), 283
esp_blufi_extra_info_t::softap_channel_set (C++ member), 284
esp_blufi_extra_info_t::softap_max_conn_num (C++ member), 283
esp_blufi_extra_info_t::softap_max_conn_num_set (C++ member), 283
esp_blufi_extra_info_t::softap_passwd (C++ member), 283
esp_blufi_extra_info_t::softap_passwd_len (C++ member), 283
esp_blufi_extra_info_t::softap_ssid (C++ member), 283
esp_blufi_extra_info_t::softap_ssid_len (C++ member), 283
esp_blufi_extra_info_t::sta_bssid (C++ member), 283
esp_blufi_extra_info_t::sta_bssid_set (C++ member), 283
esp_blufi_extra_info_t::sta_passwd (C++ member), 283
esp_blufi_extra_info_t::sta_passwd_len (C++ member), 283
esp_blufi_extra_info_t::sta_ssid (C++ member), 283
esp_blufi_extra_info_t::sta_ssid_len

(*C++ member*), 283
esp_blufi_get_version (*C++ function*), 276
esp_blufi_init_state_t (*C++ enum*), 287
esp_blufi_init_state_t::ESP_BLUFI_INIT_FAILED (*C++ enumerator*), 287
esp_blufi_init_state_t::ESP_BLUFI_INIT_OK (*C++ enumerator*), 287
esp_blufi_negotiate_data_handler_t (*C++ type*), 285
esp_blufi_profile_deinit (*C++ function*), 276
esp_blufi_profile_init (*C++ function*), 276
esp_blufi_register_callbacks (*C++ function*), 276
esp_blufi_send_custom_data (*C++ function*), 276
esp_blufi_send_error_info (*C++ function*), 276
esp_blufi_send_wifi_conn_report (*C++ function*), 276
esp_blufi_send_wifi_list (*C++ function*), 276
esp_blufi_sta_conn_state_t (*C++ enum*), 286
esp_blufi_sta_conn_state_t::ESP_BLUFI_STA_CONN_FAIL (*C++ enumerator*), 287
esp_blufi_sta_conn_state_t::ESP_BLUFI_STA_CONN_SUCCESS (*C++ enumerator*), 287
esp_bredr_sco_datapath_set (*C++ function*), 152
esp_bredr_tx_power_get (*C++ function*), 152
esp_bredr_tx_power_set (*C++ function*), 151
ESP_BT_COD_FORMAT_TYPE_1 (*C macro*), 301
ESP_BT_COD_FORMAT_TYPE_BIT_MASK (*C macro*), 301
ESP_BT_COD_FORMAT_TYPE_BIT_OFFSET (*C macro*), 301
ESP_BT_COD_MAJOR_DEV_BIT_MASK (*C macro*), 301
ESP_BT_COD_MAJOR_DEV_BIT_OFFSET (*C macro*), 301
esp_bt_cod_major_dev_t (*C++ enum*), 304
esp_bt_cod_major_dev_t::ESP_BT_COD_MAJOR_DEV_AV (*C++ enumerator*), 304
esp_bt_cod_major_dev_t::ESP_BT_COD_MAJOR_DEV_COMPUTER (*C++ enumerator*), 304
esp_bt_cod_major_dev_t::ESP_BT_COD_MAJOR_DEV_HEALTH (*C++ enumerator*), 305
esp_bt_cod_major_dev_t::ESP_BT_COD_MAJOR_DEV_IMAGING (*C++ enumerator*), 305
esp_bt_cod_major_dev_t::ESP_BT_COD_MAJOR_DEV_MISC (*C++ enumerator*), 304
esp_bt_cod_major_dev_t::ESP_BT_COD_MAJOR_DEV_NET_NAP (*C++ enumerator*), 304
esp_bt_cod_major_dev_t::ESP_BT_COD_MAJOR_DEV_PERIPHERAL (*C++ enumerator*), 305
esp_bt_cod_major_dev_t::ESP_BT_COD_MAJOR_DEV_PHONE (*C++ enumerator*), 304
esp_bt_cod_major_dev_t::ESP_BT_COD_MAJOR_DEV_TOY (*C++ enumerator*), 305
esp_bt_cod_major_dev_t::ESP_BT_COD_MAJOR_DEV_UNCA (*C++ enumerator*), 305
esp_bt_cod_major_dev_t::ESP_BT_COD_MAJOR_DEV_WEAR (*C++ enumerator*), 305
ESP_BT_COD_MINOR_DEV_BIT_MASK (*C macro*), 301
ESP_BT_COD_MINOR_DEV_BIT_OFFSET (*C macro*), 301
esp_bt_cod_mode_t (*C++ enum*), 302
esp_bt_cod_mode_t::ESP_BT_CLR_COD_SERVICE_CLASS (*C++ enumerator*), 302
esp_bt_cod_mode_t::ESP_BT_INIT_COD (*C++ enumerator*), 302
esp_bt_cod_mode_t::ESP_BT_SET_COD_ALL (*C++ enumerator*), 302
esp_bt_cod_mode_t::ESP_BT_SET_COD_MAJOR_MINOR (*C++ enumerator*), 302
esp_bt_cod_mode_t::ESP_BT_SET_COD_SERVICE_CLASS (*C++ enumerator*), 302
ESP_BT_COD_SRVC_BIT_MASK (*C macro*), 301
ESP_BT_COD_SRVC_BIT_OFFSET (*C macro*), 301
esp_bt_cod_srvc_t (*C++ enum*), 303
esp_bt_cod_srvc_t::ESP_BT_COD_SRVC_AUDIO (*C++ enumerator*), 304
esp_bt_cod_srvc_t::ESP_BT_COD_SRVC_CAPTURING (*C++ enumerator*), 304
esp_bt_cod_srvc_t::ESP_BT_COD_SRVC_INFORMATION (*C++ enumerator*), 304
esp_bt_cod_srvc_t::ESP_BT_COD_SRVC_LMTD_DISCOVER (*C++ enumerator*), 303
esp_bt_cod_srvc_t::ESP_BT_COD_SRVC_NETWORKING (*C++ enumerator*), 303
esp_bt_cod_srvc_t::ESP_BT_COD_SRVC_NONE (*C++ enumerator*), 303
esp_bt_cod_srvc_t::ESP_BT_COD_SRVC_OBJ_TRANSFER (*C++ enumerator*), 304
esp_bt_cod_srvc_t::ESP_BT_COD_SRVC_POSITIONING (*C++ enumerator*), 303
esp_bt_cod_srvc_t::ESP_BT_COD_SRVC_RENDERING (*C++ enumerator*), 303
esp_bt_cod_srvc_t::ESP_BT_COD_SRVC_TELEPHONY (*C++ enumerator*), 304
esp_bt_cod_t (*C++ struct*), 298
esp_bt_cod_t::major (*C++ member*), 298
esp_bt_cod_t::minor (*C++ member*), 298
esp_bt_cod_t::reserved_2 (*C++ member*), 298
esp_bt_cod_t::reserved_8 (*C++ member*), 298
esp_bt_cod_t::service (*C++ member*), 298
esp_bt_connection_mode_t (*C++ enum*), 302
esp_bt_connection_mode_t::ESP_BT_CONNECTABLE (*C++ enumerator*), 302
esp_bt_connection_mode_t::ESP_BT_NON_CONNECTABLE (*C++ enumerator*), 302
ESP_BT_CONTROLLER_CONFIG_MAGIC_VAL (*C*

macro), 156
esp_bt_controller_config_t (*C++ struct*), 155
esp_bt_controller_config_t::auto_latency (*C++ member*), 156
esp_bt_controller_config_t::ble_max_conn (*C++ member*), 155
esp_bt_controller_config_t::ble_sca (*C++ member*), 156
esp_bt_controller_config_t::bt_legacy_auth_vs_evt (*C++ member*), 156
esp_bt_controller_config_t::bt_max_acl_conn (*C++ member*), 156
esp_bt_controller_config_t::bt_max_sync_conn (*C++ member*), 156
esp_bt_controller_config_t::bt_sco_datapath (*C++ member*), 156
esp_bt_controller_config_t::controller_debug_flag (*C++ member*), 155
esp_bt_controller_config_t::controller_task_prio (*C++ member*), 155
esp_bt_controller_config_t::controller_task_stack_size (*C++ member*), 155
esp_bt_controller_config_t::hci_uart_baudrate (*C++ member*), 155
esp_bt_controller_config_t::hci_uart_no (*C++ member*), 155
esp_bt_controller_config_t::hli (*C++ member*), 156
esp_bt_controller_config_t::magic (*C++ member*), 156
esp_bt_controller_config_t::mesh_adv_size (*C++ member*), 155
esp_bt_controller_config_t::mode (*C++ member*), 155
esp_bt_controller_config_t::normal_adv_size (*C++ member*), 155
esp_bt_controller_config_t::pcm_polar (*C++ member*), 156
esp_bt_controller_config_t::pcm_role (*C++ member*), 156
esp_bt_controller_config_t::scan_duplicate_mode (*C++ member*), 155
esp_bt_controller_config_t::scan_duplicate_type (*C++ member*), 155
esp_bt_controller_config_t::send_adv_reserved_size (*C++ member*), 155
esp_bt_controller_deinit (*C++ function*), 152
esp_bt_controller_disable (*C++ function*), 152
esp_bt_controller_enable (*C++ function*), 152
esp_bt_controller_get_status (*C++ function*), 152
esp_bt_controller_init (*C++ function*), 152
esp_bt_controller_mem_release (*C++ function*), 153
esp_bt_controller_status_t (*C++ enum*), 158
esp_bt_controller_status_t::ESP_BT_CONTROLLER_STA (*C++ enumerator*), 158
esp_bt_controller_status_t::ESP_BT_CONTROLLER_STA (*C++ enumerator*), 158
esp_bt_controller_status_t::ESP_BT_CONTROLLER_STA (*C++ enumerator*), 158
esp_bt_controller_status_t::ESP_BT_CONTROLLER_STA (*C++ enumerator*), 158
esp_bt_dev_get_address (*C++ function*), 166
esp_bt_dev_set_device_name (*C++ function*), 166
esp_bt_dev_type_t (*C++ enum*), 164
esp_bt_dev_type_t::ESP_BT_DEVICE_TYPE_BLE (*C++ enumerator*), 164
esp_bt_dev_type_t::ESP_BT_DEVICE_TYPE_BREDR (*C++ enumerator*), 164
esp_bt_dev_type_t::ESP_BT_DEVICE_TYPE_DUMO (*C++ enumerator*), 164
esp_bt_discovery_mode_t (*C++ enum*), 303
esp_bt_discovery_mode_t::ESP_BT_GENERAL_DISCOVERA (*C++ enumerator*), 303
esp_bt_discovery_mode_t::ESP_BT_LIMITED_DISCOVERA (*C++ enumerator*), 303
esp_bt_discovery_mode_t::ESP_BT_NON_DISCOVERABLE (*C++ enumerator*), 303
esp_bt_duplicate_exceptional_subcode_type_t (*C++ enum*), 226
esp_bt_duplicate_exceptional_subcode_type_t::ESP_ (*C++ enumerator*), 226
esp_bt_duplicate_exceptional_subcode_type_t::ESP_ (*C++ enumerator*), 226
esp_bt_duplicate_exceptional_subcode_type_t::ESP_ (*C++ enumerator*), 226
esp_bt_eir_data_t (*C++ struct*), 298
esp_bt_eir_data_t::fec_required (*C++ member*), 298
esp_bt_eir_data_t::flag (*C++ member*), 299
esp_bt_eir_data_t::include_txpower (*C++ member*), 298
esp_bt_eir_data_t::include_uuid (*C++ member*), 298
esp_bt_eir_data_t::manufacturer_len (*C++ member*), 299
esp_bt_eir_data_t::p_manufacturer_data (*C++ member*), 299
esp_bt_eir_data_t::p_url (*C++ member*), 299
esp_bt_eir_data_t::url_len (*C++ member*), 299
ESP_BT_EIR_FLAG_BREDR_NOT_SPT (*C macro*), 300
ESP_BT_EIR_FLAG_DMT_CONTROLLER_SPT (*C macro*), 300
ESP_BT_EIR_FLAG_DMT_HOST_SPT (*C macro*), 300
ESP_BT_EIR_FLAG_GEN_DISC (*C macro*), 300

ESP_BT_EIR_FLAG_LIMIT_DISC (*C macro*), 300
ESP_BT_EIR_MAX_LEN (*C macro*), 300
ESP_BT_EIR_TYPE_CMPL_128BITS_UUID (*C macro*), 300
ESP_BT_EIR_TYPE_CMPL_16BITS_UUID (*C macro*), 299
ESP_BT_EIR_TYPE_CMPL_32BITS_UUID (*C macro*), 299
ESP_BT_EIR_TYPE_CMPL_LOCAL_NAME (*C macro*), 300
ESP_BT_EIR_TYPE_FLAGS (*C macro*), 299
ESP_BT_EIR_TYPE_INCMPL_128BITS_UUID (*C macro*), 300
ESP_BT_EIR_TYPE_INCMPL_16BITS_UUID (*C macro*), 299
ESP_BT_EIR_TYPE_INCMPL_32BITS_UUID (*C macro*), 299
ESP_BT_EIR_TYPE_MANU_SPECIFIC (*C macro*), 300
ESP_BT_EIR_TYPE_MAX_NUM (*C macro*), 300
ESP_BT_EIR_TYPE_SHORT_LOCAL_NAME (*C macro*), 300
esp_bt_eir_type_t (*C++ type*), 302
ESP_BT_EIR_TYPE_TX_POWER_LEVEL (*C macro*), 300
ESP_BT_EIR_TYPE_URL (*C macro*), 300
esp_bt_gap_afh_channels (*C++ type*), 302
ESP_BT_GAP_AFH_CHANNELS_LEN (*C macro*), 299
esp_bt_gap_cancel_discovery (*C++ function*), 289
esp_bt_gap_cb_event_t (*C++ enum*), 305
esp_bt_gap_cb_event_t::ESP_BT_GAP_AUTH_CMPL_EVT (*C++ enumerator*), 305
esp_bt_gap_cb_event_t::ESP_BT_GAP_CFM_REQ_EVT (*C++ enumerator*), 306
esp_bt_gap_cb_event_t::ESP_BT_GAP_CONFIG_EIR_DATA_EVT (*C++ enumerator*), 306
esp_bt_gap_cb_event_t::ESP_BT_GAP_DISC_RES_EVT (*C++ enumerator*), 305
esp_bt_gap_cb_event_t::ESP_BT_GAP_DISC_STATE_CHANGED_EVT (*C++ enumerator*), 305
esp_bt_gap_cb_event_t::ESP_BT_GAP_EVT_MAX (*C++ enumerator*), 306
esp_bt_gap_cb_event_t::ESP_BT_GAP_KEY_NOTIF_EVT (*C++ enumerator*), 306
esp_bt_gap_cb_event_t::ESP_BT_GAP_KEY_REQ_EVT (*C++ enumerator*), 306
esp_bt_gap_cb_event_t::ESP_BT_GAP_MODE_CHG_EVT (*C++ enumerator*), 306
esp_bt_gap_cb_event_t::ESP_BT_GAP_PIN_REQ_EVT (*C++ enumerator*), 306
esp_bt_gap_cb_event_t::ESP_BT_GAP_QOS_CMPL_EVT (*C++ enumerator*), 306
esp_bt_gap_cb_event_t::ESP_BT_GAP_READ_REMOTE_NAME_EVT (*C++ enumerator*), 306
esp_bt_gap_cb_event_t::ESP_BT_GAP_READ_RSSI_DELTA_EVT (*C++ enumerator*), 306
esp_bt_gap_cb_event_t::ESP_BT_GAP_REMOVE_BOND_DEV (*C++ enumerator*), 306
esp_bt_gap_cb_event_t::ESP_BT_GAP_RMT_SRVC_REC_EV (*C++ enumerator*), 305
esp_bt_gap_cb_event_t::ESP_BT_GAP_RMT_SRVCS_EVT (*C++ enumerator*), 305
esp_bt_gap_cb_event_t::ESP_BT_GAP_SET_AFH_CHANNEL (*C++ enumerator*), 306
esp_bt_gap_cb_param_t (*C++ union*), 292
esp_bt_gap_cb_param_t::auth_cmpl (*C++ member*), 293
esp_bt_gap_cb_param_t::auth_cmpl_param (*C++ struct*), 293
esp_bt_gap_cb_param_t::auth_cmpl_param::bda (*C++ member*), 293
esp_bt_gap_cb_param_t::auth_cmpl_param::device_na (*C++ member*), 294
esp_bt_gap_cb_param_t::auth_cmpl_param::stat (*C++ member*), 293
esp_bt_gap_cb_param_t::bt_remove_bond_dev_cmpl_ev (*C++ struct*), 294
esp_bt_gap_cb_param_t::bt_remove_bond_dev_cmpl_ev (*C++ member*), 294
esp_bt_gap_cb_param_t::bt_remove_bond_dev_cmpl_ev (*C++ member*), 294
esp_bt_gap_cb_param_t::cfm_req (*C++ member*), 293
esp_bt_gap_cb_param_t::cfm_req_param (*C++ struct*), 294
esp_bt_gap_cb_param_t::cfm_req_param::bda (*C++ member*), 294
esp_bt_gap_cb_param_t::cfm_req_param::num_val (*C++ member*), 294
esp_bt_gap_cb_param_t::config_eir_data (*C++ member*), 293
esp_bt_gap_cb_param_t::config_eir_data_param (*C++ struct*), 294
esp_bt_gap_cb_param_t::config_eir_data_param::eir (*C++ member*), 294
esp_bt_gap_cb_param_t::config_eir_data_param::eir (*C++ member*), 294
esp_bt_gap_cb_param_t::config_eir_data_param::sta (*C++ member*), 294
esp_bt_gap_cb_param_t::disc_res (*C++ member*), 292
esp_bt_gap_cb_param_t::disc_res_param (*C++ struct*), 294
esp_bt_gap_cb_param_t::disc_res_param::bda (*C++ member*), 295
esp_bt_gap_cb_param_t::disc_res_param::num_prop (*C++ member*), 295
esp_bt_gap_cb_param_t::disc_res_param::prop (*C++ member*), 295
esp_bt_gap_cb_param_t::disc_st_chg (*C++ member*), 292
esp_bt_gap_cb_param_t::disc_state_changed_param (*C++ struct*), 295
esp_bt_gap_cb_param_t::disc_state_changed_param::

(C++ *member*), 295
esp_bt_gap_cb_param_t::key_notif (C++ *member*), 293
esp_bt_gap_cb_param_t::key_notif_param (C++ *struct*), 295
esp_bt_gap_cb_param_t::key_notif_param::bda (C++ *member*), 295
esp_bt_gap_cb_param_t::key_notif_param::passkey (C++ *member*), 295
esp_bt_gap_cb_param_t::key_req (C++ *member*), 293
esp_bt_gap_cb_param_t::key_req_param (C++ *struct*), 295
esp_bt_gap_cb_param_t::key_req_param::bda (C++ *member*), 295
esp_bt_gap_cb_param_t::mode_chg (C++ *member*), 293
esp_bt_gap_cb_param_t::mode_chg_param (C++ *struct*), 295
esp_bt_gap_cb_param_t::mode_chg_param::bda (C++ *member*), 295
esp_bt_gap_cb_param_t::mode_chg_param::mode (C++ *member*), 295
esp_bt_gap_cb_param_t::pin_req (C++ *member*), 293
esp_bt_gap_cb_param_t::pin_req_param (C++ *struct*), 296
esp_bt_gap_cb_param_t::pin_req_param::bda (C++ *member*), 296
esp_bt_gap_cb_param_t::pin_req_param::min_16_digit (C++ *member*), 296
esp_bt_gap_cb_param_t::qos_cmpl (C++ *member*), 293
esp_bt_gap_cb_param_t::qos_cmpl_param (C++ *struct*), 296
esp_bt_gap_cb_param_t::qos_cmpl_param::bda (C++ *member*), 296
esp_bt_gap_cb_param_t::qos_cmpl_param::stat (C++ *member*), 296
esp_bt_gap_cb_param_t::qos_cmpl_param::tpoll (C++ *member*), 296
esp_bt_gap_cb_param_t::read_rmt_name (C++ *member*), 293
esp_bt_gap_cb_param_t::read_rmt_name_param (C++ *struct*), 296
esp_bt_gap_cb_param_t::read_rmt_name_param::bda (C++ *member*), 296
esp_bt_gap_cb_param_t::read_rmt_name_param::rmt_dev_name (C++ *member*), 296
esp_bt_gap_cb_param_t::read_rmt_name_param::stat (C++ *member*), 296
esp_bt_gap_cb_param_t::read_rssi_delta (C++ *member*), 293
esp_bt_gap_cb_param_t::read_rssi_delta_param (C++ *struct*), 296
esp_bt_gap_cb_param_t::read_rssi_delta_param::bda (C++ *member*), 297
esp_bt_gap_cb_param_t::read_rssi_delta_param::rssi_delta (C++ *member*), 297
esp_bt_gap_cb_param_t::read_rssi_delta_param::stat (C++ *member*), 297
esp_bt_gap_cb_param_t::remove_bond_dev_cmpl (C++ *member*), 293
esp_bt_gap_cb_param_t::rmt_srvc_rec (C++ *member*), 292
esp_bt_gap_cb_param_t::rmt_srvc_rec_param (C++ *struct*), 297
esp_bt_gap_cb_param_t::rmt_srvc_rec_param::bda (C++ *member*), 297
esp_bt_gap_cb_param_t::rmt_srvc_rec_param::stat (C++ *member*), 297
esp_bt_gap_cb_param_t::rmt_srvcs (C++ *member*), 292
esp_bt_gap_cb_param_t::rmt_srvcs_param (C++ *struct*), 297
esp_bt_gap_cb_param_t::rmt_srvcs_param::bda (C++ *member*), 297
esp_bt_gap_cb_param_t::rmt_srvcs_param::num_uuids (C++ *member*), 297
esp_bt_gap_cb_param_t::rmt_srvcs_param::stat (C++ *member*), 297
esp_bt_gap_cb_param_t::rmt_srvcs_param::uuid_list (C++ *member*), 297
esp_bt_gap_cb_param_t::set_afh_channels (C++ *member*), 293
esp_bt_gap_cb_param_t::set_afh_channels_param (C++ *struct*), 297
esp_bt_gap_cb_param_t::set_afh_channels_param::stat (C++ *member*), 297
esp_bt_gap_cb_t (C++ *type*), 302
esp_bt_gap_config_eir_data (C++ *function*), 290
esp_bt_gap_dev_prop_t (C++ *struct*), 298
esp_bt_gap_dev_prop_t::len (C++ *member*), 298
esp_bt_gap_dev_prop_t::type (C++ *member*), 298
esp_bt_gap_dev_prop_t::val (C++ *member*), 298
esp_bt_gap_dev_prop_type_t (C++ *enum*), 303
esp_bt_gap_dev_prop_type_t::ESP_BT_GAP_DEV_PROP_B (C++ *enumerator*), 303
esp_bt_gap_dev_prop_type_t::ESP_BT_GAP_DEV_PROP_C (C++ *enumerator*), 303
esp_bt_gap_dev_prop_type_t::ESP_BT_GAP_DEV_PROP_E (C++ *enumerator*), 303
esp_bt_gap_dev_prop_type_t::ESP_BT_GAP_DEV_PROP_R (C++ *enumerator*), 303
esp_bt_gap_discovery_state_t (C++ *enum*), 305
esp_bt_gap_discovery_state_t::ESP_BT_GAP_DISCOVER (C++ *enumerator*), 305
esp_bt_gap_discovery_state_t::ESP_BT_GAP_DISCOVER (C++ *enumerator*), 305
ESP_BT_GAP_EIR_DATA_LEN (C *macro*), 299

esp_bt_gap_get_bond_device_list (C++ function), 290
esp_bt_gap_get_bond_device_num (C++ function), 290
esp_bt_gap_get_cod (C++ function), 290
esp_bt_gap_get_cod_format_type (C++ function), 288
esp_bt_gap_get_cod_major_dev (C++ function), 288
esp_bt_gap_get_cod_minor_dev (C++ function), 288
esp_bt_gap_get_cod_srvc (C++ function), 288
esp_bt_gap_get_remote_service_record (C++ function), 289
esp_bt_gap_get_remote_services (C++ function), 289
esp_bt_gap_is_valid_cod (C++ function), 288
ESP_BT_GAP_MAX_BDNAME_LEN (C macro), 299
ESP_BT_GAP_MAX_INQ_LEN (C macro), 301
ESP_BT_GAP_MIN_INQ_LEN (C macro), 301
esp_bt_gap_pin_reply (C++ function), 291
esp_bt_gap_read_remote_name (C++ function), 292
esp_bt_gap_read_rssi_delta (C++ function), 290
esp_bt_gap_register_callback (C++ function), 288
esp_bt_gap_remove_bond_device (C++ function), 290
esp_bt_gap_resolve_eir_data (C++ function), 289
ESP_BT_GAP_RSSI_HIGH_THRLD (C macro), 299
ESP_BT_GAP_RSSI_LOW_THRLD (C macro), 299
esp_bt_gap_set_afh_channels (C++ function), 292
esp_bt_gap_set_cod (C++ function), 290
esp_bt_gap_set_pin (C++ function), 291
esp_bt_gap_set_qos (C++ function), 292
esp_bt_gap_set_scan_mode (C++ function), 288
esp_bt_gap_set_security_param (C++ function), 291
esp_bt_gap_ssp_confirm_reply (C++ function), 291
esp_bt_gap_ssp_passkey_reply (C++ function), 291
esp_bt_gap_start_discovery (C++ function), 289
esp_bt_hf_answer_call (C++ function), 373
esp_bt_hf_bsir (C++ function), 372
esp_bt_hf_cind_response (C++ function), 371
esp_bt_hf_clcc_response (C++ function), 372
ESP_BT_HF_CLIENT_NUMBER_LEN (C macro), 365
ESP_BT_HF_CLIENT_OPERATOR_NAME_LEN (C macro), 365
esp_bt_hf_cmee_response (C++ function), 371
esp_bt_hf_cnum_response (C++ function), 372
esp_bt_hf_connect (C++ function), 370
esp_bt_hf_connect_audio (C++ function), 370
esp_bt_hf_cops_response (C++ function), 372
esp_bt_hf_deinit (C++ function), 369
esp_bt_hf_disconnect (C++ function), 370
esp_bt_hf_disconnect_audio (C++ function), 370
esp_bt_hf_end_call (C++ function), 374
esp_bt_hf_indchange_notification (C++ function), 371
esp_bt_hf_init (C++ function), 369
ESP_BT_HF_NUMBER_LEN (C macro), 346
ESP_BT_HF_OPERATOR_NAME_LEN (C macro), 346
esp_bt_hf_out_call (C++ function), 373
esp_bt_hf_register_callback (C++ function), 369
esp_bt_hf_register_data_callback (C++ function), 374
esp_bt_hf_reject_call (C++ function), 373
esp_bt_hf_volume_control (C++ function), 370
esp_bt_hf_vra (C++ function), 370
esp_bt_inq_mode_t (C++ enum), 306
esp_bt_inq_mode_t::ESP_BT_INQ_MODE_GENERAL_INQUIR (C++ enumerator), 306
esp_bt_inq_mode_t::ESP_BT_INQ_MODE_LIMITED_INQUIR (C++ enumerator), 306
ESP_BT_IO_CAP_IN (C macro), 300
ESP_BT_IO_CAP_IO (C macro), 300
ESP_BT_IO_CAP_NONE (C macro), 300
ESP_BT_IO_CAP_OUT (C macro), 300
esp_bt_io_cap_t (C++ type), 302
esp_bt_mem_release (C++ function), 153
esp_bt_mode_t (C++ enum), 157
esp_bt_mode_t::ESP_BT_MODE_BLE (C++ enumerator), 157
esp_bt_mode_t::ESP_BT_MODE_BTDM (C++ enumerator), 157
esp_bt_mode_t::ESP_BT_MODE_CLASSIC_BT (C++ enumerator), 157
esp_bt_mode_t::ESP_BT_MODE_IDLE (C++ enumerator), 157
ESP_BT_OCTET16_LEN (C macro), 161
esp_bt_octet16_t (C++ type), 162
ESP_BT_OCTET8_LEN (C macro), 161
esp_bt_octet8_t (C++ type), 162
ESP_BT_PIN_CODE_LEN (C macro), 300
esp_bt_pin_code_t (C++ type), 302
esp_bt_pin_type_t (C++ enum), 304
esp_bt_pin_type_t::ESP_BT_PIN_TYPE_FIXED (C++ enumerator), 304
esp_bt_pin_type_t::ESP_BT_PIN_TYPE_VARIABLE (C++ enumerator), 304
ESP_BT_PM_MD_ACTIVE (C macro), 301
ESP_BT_PM_MD_HOLD (C macro), 301
ESP_BT_PM_MD_PARK (C macro), 301
ESP_BT_PM_MD_SNIFF (C macro), 301

esp_bt_pm_mode_t (*C++ type*), 302
esp_bt_sleep_disable (*C++ function*), 154
esp_bt_sleep_enable (*C++ function*), 154
esp_bt_sp_param_t (*C++ enum*), 304
esp_bt_sp_param_t::ESP_BT_SP_IOCAP_MODE (*C++ enumerator*), 304
esp_bt_status_t (*C++ enum*), 162
esp_bt_status_t::ESP_BT_STATUS_AUTH_FAILURE (*C++ enumerator*), 163
esp_bt_status_t::ESP_BT_STATUS_AUTH_REJECTED (*C++ enumerator*), 163
esp_bt_status_t::ESP_BT_STATUS_BUSY (*C++ enumerator*), 163
esp_bt_status_t::ESP_BT_STATUS_CONTROL_LE_DATA_LEN_UNSUPPORTED (*C++ enumerator*), 163
esp_bt_status_t::ESP_BT_STATUS_DONE (*C++ enumerator*), 163
esp_bt_status_t::ESP_BT_STATUS_EIR_TOO_LARGE (*C++ enumerator*), 163
esp_bt_status_t::ESP_BT_STATUS_ERR_ILLEGAL_PARAMETER_FMT (*C++ enumerator*), 163
esp_bt_status_t::ESP_BT_STATUS_FAIL (*C++ enumerator*), 163
esp_bt_status_t::ESP_BT_STATUS_INVALID_STATIC_RAND_ADDR (*C++ enumerator*), 163
esp_bt_status_t::ESP_BT_STATUS_MEMORY_FULL (*C++ enumerator*), 163
esp_bt_status_t::ESP_BT_STATUS_NOMEM (*C++ enumerator*), 163
esp_bt_status_t::ESP_BT_STATUS_NOT_READY (*C++ enumerator*), 163
esp_bt_status_t::ESP_BT_STATUS_PARAM_OUT_OF_RANGE (*C++ enumerator*), 163
esp_bt_status_t::ESP_BT_STATUS_PARM_INVALID (*C++ enumerator*), 163
esp_bt_status_t::ESP_BT_STATUS_PEER_LE_DATA_LEN_UNSUPPORTED (*C++ enumerator*), 163
esp_bt_status_t::ESP_BT_STATUS_PENDING (*C++ enumerator*), 163
esp_bt_status_t::ESP_BT_STATUS_RMT_DEV_DOWN (*C++ enumerator*), 163
esp_bt_status_t::ESP_BT_STATUS_SUCCESS (*C++ enumerator*), 163
esp_bt_status_t::ESP_BT_STATUS_TIMEOUT (*C++ enumerator*), 163
esp_bt_status_t::ESP_BT_STATUS_UNACCEPT_CONN_INTERVAL (*C++ enumerator*), 163
esp_bt_status_t::ESP_BT_STATUS_UNHANDLED (*C++ enumerator*), 163
esp_bt_status_t::ESP_BT_STATUS_UNSUPPORTED (*C++ enumerator*), 163
esp_bt_uuid_t (*C++ struct*), 160
esp_bt_uuid_t::len (*C++ member*), 160
esp_bt_uuid_t::uuid (*C++ member*), 161
esp_bt_uuid_t::uuid128 (*C++ member*), 161
esp_bt_uuid_t::uuid16 (*C++ member*), 160
esp_bt_uuid_t::uuid32 (*C++ member*), 161
esp_chip_id_t (*C++ enum*), 1444
esp_chip_id_t::ESP_CHIP_ID_ESP32 (*C++ enumerator*), 1444
esp_chip_id_t::ESP_CHIP_ID_ESP32C3 (*C++ enumerator*), 1444
esp_chip_id_t::ESP_CHIP_ID_ESP32H2 (*C++ enumerator*), 1444
esp_chip_id_t::ESP_CHIP_ID_ESP32S2 (*C++ enumerator*), 1444
esp_chip_id_t::ESP_CHIP_ID_ESP32S3 (*C++ enumerator*), 1444
esp_chip_id_t::ESP_CHIP_ID_INVALID (*C++ enumerator*), 1444
esp_console_cmd_func_t (*C++ type*), 1459
esp_console_cmd_register (*C++ function*), 1454
esp_console_cmd_t (*C++ struct*), 1458
esp_console_cmd_t::argtable (*C++ member*), 1458
esp_console_cmd_t::command (*C++ member*), 1458
esp_console_cmd_t::func (*C++ member*), 1458
esp_console_cmd_t::help (*C++ member*), 1458
esp_console_cmd_t::hint (*C++ member*), 1458
ESP_CONSOLE_CONFIG_DEFAULT (*C macro*), 1459
esp_console_config_t (*C++ struct*), 1457
esp_console_config_t::hint_bold (*C++ member*), 1457
esp_console_config_t::hint_color (*C++ member*), 1457
esp_console_config_t::max_cmdline_args (*C++ member*), 1457
esp_console_config_t::max_cmdline_length (*C++ member*), 1457
esp_console_deinit (*C++ function*), 1454
ESP_CONSOLE_DEV_CDC_CONFIG_DEFAULT (*C macro*), 1459
ESP_CONSOLE_DEV_UART_CONFIG_DEFAULT (*C macro*), 1459
esp_console_dev_uart_config_t (*C++ struct*), 1458
esp_console_dev_uart_config_t::baud_rate (*C++ member*), 1458
esp_console_dev_uart_config_t::channel (*C++ member*), 1458
esp_console_dev_uart_config_t::rx_gpio_num (*C++ member*), 1458
esp_console_dev_uart_config_t::tx_gpio_num (*C++ member*), 1458
esp_console_dev_usb_cdc_config_t (*C++ struct*), 1458
esp_console_get_completion (*C++ function*), 1455
esp_console_get_hint (*C++ function*), 1455
esp_console_init (*C++ function*), 1454
esp_console_new_repl_uart (*C++ function*),

1456
esp_console_new_repl_usb_cdc (C++ function), 1456
esp_console_register_help_command (C++ function), 1455
ESP_CONSOLE_REPL_CONFIG_DEFAULT (C macro), 1459
esp_console_repl_config_t (C++ struct), 1457
esp_console_repl_config_t::history_save_path (C++ member), 1457
esp_console_repl_config_t::max_cmdline_length (C++ member), 1458
esp_console_repl_config_t::max_history_len (C++ member), 1457
esp_console_repl_config_t::prompt (C++ member), 1457
esp_console_repl_config_t::task_priority (C++ member), 1457
esp_console_repl_config_t::task_stack_size (C++ member), 1457
esp_console_repl_s (C++ struct), 1459
esp_console_repl_s::del (C++ member), 1459
esp_console_repl_t (C++ type), 1459
esp_console_run (C++ function), 1454
esp_console_split_argv (C++ function), 1455
esp_console_start_repl (C++ function), 1456
esp_crt_bundle_attach (C++ function), 1302
esp_crt_bundle_detach (C++ function), 1302
esp_crt_bundle_set (C++ function), 1302
esp_deep_sleep (C++ function), 1724
esp_deep_sleep_disable_rom_logging (C++ function), 1725
esp_deep_sleep_start (C++ function), 1724
esp_deep_sleep_wake_stub_fn_t (C++ type), 1725
ESP_DEFAULT_GATT_IF (C macro), 161
esp_default_wake_deep_sleep (C++ function), 1725
esp_deregister_freertos_idle_hook (C++ function), 1636
esp_deregister_freertos_idle_hook_for_cpu (C++ function), 1636
esp_deregister_freertos_tick_hook (C++ function), 1637
esp_deregister_freertos_tick_hook_for_cpu (C++ function), 1637
ESP_DRAM_LOGD (C macro), 1687
ESP_DRAM_LOGE (C macro), 1687
ESP_DRAM_LOGI (C macro), 1687
ESP_DRAM_LOGV (C macro), 1687
ESP_DRAM_LOGW (C macro), 1687
esp_duplicate_info_t (C++ type), 215
esp_duplicate_scan_exceptional_list_type_t (C++ enum), 227
esp_duplicate_scan_exceptional_list_type_t::ESP_BLE_DUPLICATE_SCAN_EXCEPTIONAL_ADDR_LIST (C++ enumerator), 227
esp_duplicate_scan_exceptional_list_type_t::ESP_BLE_DUPLICATE_SCAN_EXCEPTIONAL_ADDR_LIST (C++ enumerator), 227
esp_duplicate_scan_exceptional_list_type_t::ESP_BLE_DUPLICATE_SCAN_EXCEPTIONAL_ADDR_LIST (C++ enumerator), 227
esp_duplicate_scan_exceptional_list_type_t::ESP_BLE_DUPLICATE_SCAN_EXCEPTIONAL_ADDR_LIST (C++ enumerator), 227
esp_duplicate_scan_exceptional_list_type_t::ESP_BLE_DUPLICATE_SCAN_EXCEPTIONAL_ADDR_LIST (C++ enumerator), 227
ESP_EARLY_LOGD (C macro), 1686
ESP_EARLY_LOGE (C macro), 1685
ESP_EARLY_LOGI (C macro), 1686
ESP_EARLY_LOGV (C macro), 1686
ESP_EARLY_LOGW (C macro), 1686
esp_efuse_batch_write_begin (C++ function), 1472
esp_efuse_batch_write_cancel (C++ function), 1473
esp_efuse_batch_write_commit (C++ function), 1473
esp_efuse_block_is_empty (C++ function), 1473
esp_efuse_check_errors (C++ function), 1475
esp_efuse_check_secure_version (C++ function), 1472
esp_efuse_desc_t (C++ struct), 1475
esp_efuse_desc_t::bit_count (C++ member), 1475
esp_efuse_desc_t::bit_start (C++ member), 1475
esp_efuse_desc_t::efuse_block (C++ member), 1475
esp_efuse_disable_basic_rom_console (C++ function), 1471
esp_efuse_disable_rom_download_mode (C++ function), 1471
esp_efuse_find_purpose (C++ function), 1474
esp_efuse_get_chip_ver (C++ function), 1470
esp_efuse_get_coding_scheme (C++ function), 1470
esp_efuse_get_field_size (C++ function), 1469
esp_efuse_get_key_dis_read (C++ function), 1473
esp_efuse_get_key_dis_write (C++ function), 1473
esp_efuse_get_key_purpose (C++ function), 1474
esp_efuse_get_keypurpose_dis_write (C++ function), 1474
esp_efuse_get_pkg_ver (C++ function), 1471
esp_efuse_key_block_unused (C++ function), 1474
esp_efuse_read_block (C++ function), 1470
esp_efuse_read_field_bit (C++ function), 1467
esp_efuse_read_field_blob (C++ function),

1467
esp_efuse_read_field_cnt (C++ function), 1468
esp_efuse_read_reg (C++ function), 1469
esp_efuse_read_secure_version (C++ function), 1471
esp_efuse_reset (C++ function), 1471
esp_efuse_rom_log_scheme_t (C++ enum), 1476
esp_efuse_rom_log_scheme_t::ESP_EFUSE_ROM_LOG_ALWAYS_OFF (C++ enumerator), 1476
esp_efuse_rom_log_scheme_t::ESP_EFUSE_ROM_LOG_ALWAYS_ON (C++ enumerator), 1476
esp_efuse_rom_log_scheme_t::ESP_EFUSE_ROM_LOG_ON_GPIO_HIGH (C++ enumerator), 1476
esp_efuse_rom_log_scheme_t::ESP_EFUSE_ROM_LOG_ON_GPIO_LOW (C++ enumerator), 1476
esp_efuse_set_key_dis_read (C++ function), 1473
esp_efuse_set_key_dis_write (C++ function), 1473
esp_efuse_set_read_protect (C++ function), 1469
esp_efuse_set_rom_log_scheme (C++ function), 1471
esp_efuse_set_write_protect (C++ function), 1469
esp_efuse_update_secure_version (C++ function), 1472
esp_efuse_write_block (C++ function), 1470
esp_efuse_write_field_bit (C++ function), 1469
esp_efuse_write_field_blob (C++ function), 1468
esp_efuse_write_field_cnt (C++ function), 1468
esp_efuse_write_key (C++ function), 1474
esp_efuse_write_keys (C++ function), 1475
esp_efuse_write_reg (C++ function), 1470
ESP_ERR_CODING (C macro), 1476
ESP_ERR_DAMAGED_READING (C macro), 1476
ESP_ERR_DPP_FAILURE (C macro), 767
ESP_ERR_DPP_INVALID_ATTR (C macro), 768
ESP_ERR_DPP_TX_FAILURE (C macro), 767
ESP_ERR_EFUSE (C macro), 1476
ESP_ERR_EFUSE_CNT_IS_FULL (C macro), 1476
ESP_ERR_EFUSE_REPEATED_PROG (C macro), 1476
ESP_ERR_ESPNOW_ARG (C macro), 725
ESP_ERR_ESPNOW_BASE (C macro), 725
ESP_ERR_ESPNOW_EXIST (C macro), 726
ESP_ERR_ESPNOW_FULL (C macro), 726
ESP_ERR_ESPNOW_IF (C macro), 726
ESP_ERR_ESPNOW_INTERNAL (C macro), 726
ESP_ERR_ESPNOW_NO_MEM (C macro), 726
ESP_ERR_ESPNOW_NOT_FOUND (C macro), 726
ESP_ERR_ESPNOW_NOT_INIT (C macro), 725
ESP_ERR_FLASH_BASE (C macro), 1478
ESP_ERR_HTTP_BASE (C macro), 1191
ESP_ERR_HTTP_CONNECT (C macro), 1191
ESP_ERR_HTTP_CONNECTING (C macro), 1191
ESP_ERR_HTTP_CONNECTION_CLOSED (C macro), 1191
ESP_ERR_HTTP_EAGAIN (C macro), 1191
ESP_ERR_HTTP_FETCH_HEADER (C macro), 1191
ESP_ERR_HTTP_INVALID_TRANSPORT (C macro), 1191
ESP_ERR_HTTP_MAX_REDIRECT (C macro), 1191
ESP_ERR_HTTP_WRITE_DATA (C macro), 1191
ESP_ERR_HTTPD_ALLOC_MEM (C macro), 1217
ESP_ERR_HTTPD_BASE (C macro), 1216
ESP_ERR_HTTPD_HANDLER_EXISTS (C macro), 1216
ESP_ERR_HTTPD_HANDLERS_FULL (C macro), 1216
ESP_ERR_HTTPD_INVALID_REQ (C macro), 1216
ESP_ERR_HTTPD_RESP_HDR (C macro), 1217
ESP_ERR_HTTPD_RESP_SEND (C macro), 1217
ESP_ERR_HTTPD_RESULT_TRUNC (C macro), 1216
ESP_ERR_HTTPD_TASK (C macro), 1217
ESP_ERR_HTTPS_OTA_BASE (C macro), 1483
ESP_ERR_HTTPS_OTA_IN_PROGRESS (C macro), 1483
ESP_ERR_HW_CRYPTO_BASE (C macro), 1478
ESP_ERR_INVALID_ARG (C macro), 1477
ESP_ERR_INVALID_CRC (C macro), 1478
ESP_ERR_INVALID_MAC (C macro), 1478
ESP_ERR_INVALID_RESPONSE (C macro), 1478
ESP_ERR_INVALID_SIZE (C macro), 1477
ESP_ERR_INVALID_STATE (C macro), 1477
ESP_ERR_INVALID_VERSION (C macro), 1478
ESP_ERR_MEMPROT_BASE (C macro), 1478
ESP_ERR_MESH_ARGUMENT (C macro), 759
ESP_ERR_MESH_BASE (C macro), 1478
ESP_ERR_MESH_DISCARD (C macro), 760
ESP_ERR_MESH_DISCARD_DUPLICATE (C macro), 759
ESP_ERR_MESH_DISCONNECTED (C macro), 759
ESP_ERR_MESH_EXCEED_MTU (C macro), 759
ESP_ERR_MESH_INTERFACE (C macro), 759
ESP_ERR_MESH_NO_MEMORY (C macro), 759
ESP_ERR_MESH_NO_PARENT_FOUND (C macro), 759
ESP_ERR_MESH_NO_ROUTE_FOUND (C macro), 759
ESP_ERR_MESH_NOT_ALLOWED (C macro), 759
ESP_ERR_MESH_NOT_CONFIG (C macro), 758
ESP_ERR_MESH_NOT_INIT (C macro), 758
ESP_ERR_MESH_NOT_START (C macro), 758
ESP_ERR_MESH_NOT_SUPPORT (C macro), 759
ESP_ERR_MESH_OPTION_NULL (C macro), 759
ESP_ERR_MESH_OPTION_UNKNOWN (C macro), 759
ESP_ERR_MESH_PS (C macro), 760
ESP_ERR_MESH_QUEUE_FAIL (C macro), 759
ESP_ERR_MESH_QUEUE_FULL (C macro), 759

ESP_ERR_MESH_QUEUE_READ (*C macro*), 760
ESP_ERR_MESH_RECV_RELEASE (*C macro*), 760
ESP_ERR_MESH_TIMEOUT (*C macro*), 759
ESP_ERR_MESH_VOTING (*C macro*), 760
ESP_ERR_MESH_WIFI_NOT_START (*C macro*), 758
ESP_ERR_MESH_XMIT (*C macro*), 760
ESP_ERR_MESH_XON_NO_WINDOW (*C macro*), 759
ESP_ERR_NO_MEM (*C macro*), 1477
ESP_ERR_NOT_ENOUGH_UNUSED_KEY_BLOCKS (*C macro*), 1476
ESP_ERR_NOT_FINISHED (*C macro*), 1478
ESP_ERR_NOT_FOUND (*C macro*), 1477
ESP_ERR_NOT_SUPPORTED (*C macro*), 1477
ESP_ERR_NVS_BASE (*C macro*), 1366
ESP_ERR_NVS_CONTENT_DIFFERS (*C macro*), 1367
ESP_ERR_NVS_CORRUPT_KEY_PART (*C macro*), 1367
ESP_ERR_NVS_ENCR_NOT_SUPPORTED (*C macro*), 1367
ESP_ERR_NVS_INVALID_HANDLE (*C macro*), 1366
ESP_ERR_NVS_INVALID_LENGTH (*C macro*), 1366
ESP_ERR_NVS_INVALID_NAME (*C macro*), 1366
ESP_ERR_NVS_INVALID_STATE (*C macro*), 1366
ESP_ERR_NVS_KEY_TOO_LONG (*C macro*), 1366
ESP_ERR_NVS_KEYS_NOT_INITIALIZED (*C macro*), 1367
ESP_ERR_NVS_NEW_VERSION_FOUND (*C macro*), 1367
ESP_ERR_NVS_NO_FREE_PAGES (*C macro*), 1367
ESP_ERR_NVS_NOT_ENOUGH_SPACE (*C macro*), 1366
ESP_ERR_NVS_NOT_FOUND (*C macro*), 1366
ESP_ERR_NVS_NOT_INITIALIZED (*C macro*), 1366
ESP_ERR_NVS_PAGE_FULL (*C macro*), 1366
ESP_ERR_NVS_PART_NOT_FOUND (*C macro*), 1367
ESP_ERR_NVS_READ_ONLY (*C macro*), 1366
ESP_ERR_NVS_REMOVE_FAILED (*C macro*), 1366
ESP_ERR_NVS_TYPE_MISMATCH (*C macro*), 1366
ESP_ERR_NVS_VALUE_TOO_LONG (*C macro*), 1367
ESP_ERR_NVS_WRONG_ENCRYPTION (*C macro*), 1367
ESP_ERR_NVS_XTS_CFG_FAILED (*C macro*), 1367
ESP_ERR_NVS_XTS_CFG_NOT_FOUND (*C macro*), 1367
ESP_ERR_NVS_XTS_DECR_FAILED (*C macro*), 1367
ESP_ERR_NVS_XTS_ENCR_FAILED (*C macro*), 1367
ESP_ERR_OTA_BASE (*C macro*), 1703
ESP_ERR_OTA_PARTITION_CONFLICT (*C macro*), 1703
ESP_ERR_OTA_ROLLBACK_FAILED (*C macro*), 1704
ESP_ERR_OTA_ROLLBACK_INVALID_STATE (*C macro*), 1704
ESP_ERR_OTA_SELECT_INFO_INVALID (*C macro*), 1704
ESP_ERR_OTA_SMALL_SEC_VER (*C macro*), 1704
ESP_ERR_OTA_VALIDATE_FAILED (*C macro*), 1704
esp_err_t (*C++ type*), 1478
ESP_ERR_TIMEOUT (*C macro*), 1478
esp_err_to_name (*C++ function*), 1477
esp_err_to_name_r (*C++ function*), 1477
ESP_ERR_ULP_BASE (*C macro*), 2333
ESP_ERR_ULP_BRANCH_OUT_OF_RANGE (*C macro*), 2333
ESP_ERR_ULP_DUPLICATE_LABEL (*C macro*), 2333
ESP_ERR_ULP_INVALID_LOAD_ADDR (*C macro*), 2333
ESP_ERR_ULP_SIZE_TOO_BIG (*C macro*), 2333
ESP_ERR_ULP_UNDEFINED_LABEL (*C macro*), 2333
ESP_ERR_WIFI_BASE (*C macro*), 1478
ESP_ERR_WIFI_CONN (*C macro*), 684
ESP_ERR_WIFI_IF (*C macro*), 683
ESP_ERR_WIFI_INIT_STATE (*C macro*), 684
ESP_ERR_WIFI_MAC (*C macro*), 684
ESP_ERR_WIFI_MODE (*C macro*), 684
ESP_ERR_WIFI_NOT_ASSOC (*C macro*), 684
ESP_ERR_WIFI_NOT_CONNECT (*C macro*), 684
ESP_ERR_WIFI_NOT_INIT (*C macro*), 683
ESP_ERR_WIFI_NOT_STARTED (*C macro*), 683
ESP_ERR_WIFI_NOT_STOPPED (*C macro*), 683
ESP_ERR_WIFI_NVS (*C macro*), 684
ESP_ERR_WIFI_PASSWORD (*C macro*), 684
ESP_ERR_WIFI_POST (*C macro*), 684
ESP_ERR_WIFI_SSID (*C macro*), 684
ESP_ERR_WIFI_STATE (*C macro*), 684
ESP_ERR_WIFI_STOP_STATE (*C macro*), 684
ESP_ERR_WIFI_TIMEOUT (*C macro*), 684
ESP_ERR_WIFI_TX_DISALLOW (*C macro*), 684
ESP_ERR_WIFI_WAKE_FAIL (*C macro*), 684
ESP_ERR_WIFI_WOULD_BLOCK (*C macro*), 684
ESP_ERROR_CHECK (*C macro*), 1478
ESP_ERROR_CHECK_WITHOUT_ABORT (*C macro*), 1478
esp_esptouch_set_timeout (*C++ function*), 717
esp_eth_clear_default_handlers (*C++ function*), 796
esp_eth_config_t (*C++ struct*), 781
esp_eth_config_t::check_link_period_ms (*C++ member*), 781
esp_eth_config_t::mac (*C++ member*), 781
esp_eth_config_t::on_lowlevel_deinit_done (*C++ member*), 781
esp_eth_config_t::on_lowlevel_init_done (*C++ member*), 781
esp_eth_config_t::phy (*C++ member*), 781
esp_eth_config_t::read_phy_reg (*C++ member*), 781

esp_eth_config_t::stack_input (C++ member), 781
esp_eth_config_t::write_phy_reg (C++ member), 782
esp_eth_decrease_reference (C++ function), 780
esp_eth_del_netif_glue (C++ function), 796
esp_eth_detect_phy_addr (C++ function), 782
esp_eth_driver_install (C++ function), 778
esp_eth_driver_uninstall (C++ function), 778
esp_eth_handle_t (C++ type), 782
esp_eth_increase_reference (C++ function), 780
esp_eth_io_cmd_t (C++ enum), 784
esp_eth_io_cmd_t::ETH_CMD_G_DUPLEX_MODE (C++ enumerator), 785
esp_eth_io_cmd_t::ETH_CMD_G_MAC_ADDR (C++ enumerator), 785
esp_eth_io_cmd_t::ETH_CMD_G_PHY_ADDR (C++ enumerator), 785
esp_eth_io_cmd_t::ETH_CMD_G_SPEED (C++ enumerator), 785
esp_eth_io_cmd_t::ETH_CMD_S_FLOW_CTRL (C++ enumerator), 785
esp_eth_io_cmd_t::ETH_CMD_S_MAC_ADDR (C++ enumerator), 785
esp_eth_io_cmd_t::ETH_CMD_S_PHY_ADDR (C++ enumerator), 785
esp_eth_io_cmd_t::ETH_CMD_S_PHY_LOOPBACK (C++ enumerator), 785
esp_eth_io_cmd_t::ETH_CMD_S_PROMISCUOUS (C++ enumerator), 785
esp_eth_ioctl (C++ function), 780
esp_eth_mac_new_esp32 (C++ function), 786
esp_eth_mac_s (C++ struct), 786
esp_eth_mac_s::deinit (C++ member), 787
esp_eth_mac_s::del (C++ member), 790
esp_eth_mac_s::enable_flow_ctrl (C++ member), 789
esp_eth_mac_s::get_addr (C++ member), 788
esp_eth_mac_s::init (C++ member), 786
esp_eth_mac_s::read_phy_reg (C++ member), 788
esp_eth_mac_s::receive (C++ member), 787
esp_eth_mac_s::set_addr (C++ member), 788
esp_eth_mac_s::set_duplex (C++ member), 789
esp_eth_mac_s::set_link (C++ member), 789
esp_eth_mac_s::set_mediator (C++ member), 786
esp_eth_mac_s::set_peer_pause_ability (C++ member), 789
esp_eth_mac_s::set_promiscuous (C++ member), 789
esp_eth_mac_s::set_speed (C++ member), 789
esp_eth_mac_s::start (C++ member), 787
esp_eth_mac_s::stop (C++ member), 787
esp_eth_mac_s::transmit (C++ member), 787
esp_eth_mac_s::write_phy_reg (C++ member), 788
esp_eth_mac_t (C++ type), 791
esp_eth_mediator_s (C++ struct), 783
esp_eth_mediator_s::on_state_changed (C++ member), 783
esp_eth_mediator_s::phy_reg_read (C++ member), 783
esp_eth_mediator_s::phy_reg_write (C++ member), 783
esp_eth_mediator_s::stack_input (C++ member), 783
esp_eth_mediator_t (C++ type), 784
esp_eth_netif_glue_handle_t (C++ type), 796
esp_eth_new_netif_glue (C++ function), 795
ESP_ETH_PHY_ADDR_AUTO (C macro), 795
esp_eth_phy_new_dp83848 (C++ function), 792
esp_eth_phy_new_ip101 (C++ function), 792
esp_eth_phy_new_ksz8041 (C++ function), 792
esp_eth_phy_new_ksz8081 (C++ function), 792
esp_eth_phy_new_lan8720 (C++ function), 792
esp_eth_phy_new_lan87xx (C++ function), 792
esp_eth_phy_new_rtl8201 (C++ function), 792
esp_eth_phy_s (C++ struct), 793
esp_eth_phy_s::advertise_pause_ability (C++ member), 794
esp_eth_phy_s::deinit (C++ member), 793
esp_eth_phy_s::del (C++ member), 795
esp_eth_phy_s::get_addr (C++ member), 794
esp_eth_phy_s::get_link (C++ member), 794
esp_eth_phy_s::init (C++ member), 793
esp_eth_phy_s::loopback (C++ member), 794
esp_eth_phy_s::negotiate (C++ member), 793
esp_eth_phy_s::pwrctl (C++ member), 794
esp_eth_phy_s::reset (C++ member), 793
esp_eth_phy_s::reset_hw (C++ member), 793
esp_eth_phy_s::set_addr (C++ member), 794
esp_eth_phy_s::set_mediator (C++ member), 793
esp_eth_phy_t (C++ type), 795
esp_eth_receive (C++ function), 779
esp_eth_set_default_handlers (C++ function), 796
esp_eth_start (C++ function), 778
esp_eth_state_t (C++ enum), 784
esp_eth_state_t::ETH_STATE_DEINIT (C++ enumerator), 784
esp_eth_state_t::ETH_STATE_DUPLEX (C++ enumerator), 784
esp_eth_state_t::ETH_STATE_LINK (C++ enumerator), 784
esp_eth_state_t::ETH_STATE_LLINIT (C++ enumerator), 784
esp_eth_state_t::ETH_STATE_PAUSE (C++

enumerator), 784
esp_eth_state_t::ETH_STATE_SPEED (*C++ enumerator*), 784
esp_eth_stop (*C++ function*), 778
esp_eth_transmit (*C++ function*), 779
esp_eth_update_input_path (*C++ function*), 779
ESP_EVENT_ANY_BASE (*C macro*), 1499
ESP_EVENT_ANY_ID (*C macro*), 1499
esp_event_base_t (*C++ type*), 1500
ESP_EVENT_DECLARE_BASE (*C macro*), 1499
ESP_EVENT_DEFINE_BASE (*C macro*), 1499
esp_event_dump (*C++ function*), 1498
esp_event_handler_instance_register (*C++ function*), 1494
esp_event_handler_instance_register_with (*C++ function*), 1493
esp_event_handler_instance_t (*C++ type*), 1500
esp_event_handler_instance_unregister (*C++ function*), 1496
esp_event_handler_instance_unregister_with (*C++ function*), 1496
esp_event_handler_register (*C++ function*), 1492
esp_event_handler_register_with (*C++ function*), 1493
esp_event_handler_t (*C++ type*), 1500
esp_event_handler_unregister (*C++ function*), 1495
esp_event_handler_unregister_with (*C++ function*), 1495
esp_event_isr_post (*C++ function*), 1497
esp_event_isr_post_to (*C++ function*), 1498
esp_event_loop_args_t (*C++ struct*), 1499
esp_event_loop_args_t::queue_size (*C++ member*), 1499
esp_event_loop_args_t::task_core_id (*C++ member*), 1499
esp_event_loop_args_t::task_name (*C++ member*), 1499
esp_event_loop_args_t::task_priority (*C++ member*), 1499
esp_event_loop_args_t::task_stack_size (*C++ member*), 1499
esp_event_loop_create (*C++ function*), 1491
esp_event_loop_create_default (*C++ function*), 1491
esp_event_loop_delete (*C++ function*), 1491
esp_event_loop_delete_default (*C++ function*), 1491
esp_event_loop_handle_t (*C++ type*), 1500
esp_event_loop_init (*C++ function*), 1501
esp_event_loop_run (*C++ function*), 1491
esp_event_loop_set_cb (*C++ function*), 1501
esp_event_post (*C++ function*), 1496
esp_event_post_to (*C++ function*), 1497
esp_event_process_default (*C++ function*), 1501
esp_event_send (*C++ function*), 1500
esp_event_send_internal (*C++ function*), 1500
esp_event_set_default_eth_handlers (*C++ function*), 1501
esp_event_set_default_wifi_handlers (*C++ function*), 1501
ESP_EXECUTE_EXPRESSION_WITH_STACK (*C macro*), 1675
esp_execute_shared_stack_function (*C++ function*), 1674
ESP_FAIL (*C macro*), 1477
esp_fill_random (*C++ function*), 1715
esp_flash_chip_driver_initialized (*C++ function*), 1394
esp_flash_enc_mode_t (*C++ enum*), 1416
esp_flash_enc_mode_t::ESP_FLASH_ENC_MODE_DEVELOPM (*C++ enumerator*), 1416
esp_flash_enc_mode_t::ESP_FLASH_ENC_MODE_DISABLED (*C++ enumerator*), 1416
esp_flash_enc_mode_t::ESP_FLASH_ENC_MODE_RELEASE (*C++ enumerator*), 1416
esp_flash_encrypt_check_and_update (*C++ function*), 1415
esp_flash_encrypt_region (*C++ function*), 1415
esp_flash_encryption_enable_secure_features (*C++ function*), 1416
esp_flash_encryption_enabled (*C++ function*), 1415
esp_flash_encryption_init_checks (*C++ function*), 1415
esp_flash_encryption_set_release_mode (*C++ function*), 1416
esp_flash_erase_chip (*C++ function*), 1395
esp_flash_erase_region (*C++ function*), 1395
esp_flash_get_chip_write_protect (*C++ function*), 1396
esp_flash_get_protectable_regions (*C++ function*), 1396
esp_flash_get_protected_region (*C++ function*), 1397
esp_flash_get_size (*C++ function*), 1395
esp_flash_init (*C++ function*), 1394
esp_flash_io_mode_t (*C++ enum*), 1406
esp_flash_io_mode_t::SPI_FLASH_DIO (*C++ enumerator*), 1406
esp_flash_io_mode_t::SPI_FLASH_DOUT (*C++ enumerator*), 1406
esp_flash_io_mode_t::SPI_FLASH_FASTRD (*C++ enumerator*), 1406
esp_flash_io_mode_t::SPI_FLASH_OPI_DTR (*C++ enumerator*), 1407
esp_flash_io_mode_t::SPI_FLASH_OPI_STR (*C++ enumerator*), 1407
esp_flash_io_mode_t::SPI_FLASH_QIO (*C++ enumerator*), 1407

esp_flash_io_mode_t::SPI_FLASH_QOUT (C++ enumerator), 1406
esp_flash_io_mode_t::SPI_FLASH_READ_MODE_MAX (C++ enumerator), 1407
esp_flash_io_mode_t::SPI_FLASH_SLOWRD (C++ enumerator), 1406
esp_flash_is_quad_mode (C++ function), 1399
esp_flash_os_functions_t (C++ struct), 1399
esp_flash_os_functions_t::check_yield (C++ member), 1400
esp_flash_os_functions_t::delay_us (C++ member), 1399
esp_flash_os_functions_t::end (C++ member), 1399
esp_flash_os_functions_t::get_system_time (C++ member), 1400
esp_flash_os_functions_t::get_temp_buffer (C++ member), 1399
esp_flash_os_functions_t::region_protected (C++ member), 1399
esp_flash_os_functions_t::release_temp_buffer (C++ member), 1400
esp_flash_os_functions_t::start (C++ member), 1399
esp_flash_os_functions_t::yield (C++ member), 1400
esp_flash_read (C++ function), 1397
esp_flash_read_encrypted (C++ function), 1398
esp_flash_read_id (C++ function), 1394
esp_flash_read_unique_chip_id (C++ function), 1395
esp_flash_region_t (C++ struct), 1399
esp_flash_region_t::offset (C++ member), 1399
esp_flash_region_t::size (C++ member), 1399
esp_flash_set_chip_write_protect (C++ function), 1396
esp_flash_set_protected_region (C++ function), 1397
ESP_FLASH_SPEED_MIN (C macro), 1405
esp_flash_speed_t (C++ enum), 1406
esp_flash_speed_t::ESP_FLASH_10MHZ (C++ enumerator), 1406
esp_flash_speed_t::ESP_FLASH_120MHZ (C++ enumerator), 1406
esp_flash_speed_t::ESP_FLASH_20MHZ (C++ enumerator), 1406
esp_flash_speed_t::ESP_FLASH_26MHZ (C++ enumerator), 1406
esp_flash_speed_t::ESP_FLASH_40MHZ (C++ enumerator), 1406
esp_flash_speed_t::ESP_FLASH_5MHZ (C++ enumerator), 1406
esp_flash_speed_t::ESP_FLASH_80MHZ (C++ enumerator), 1406
esp_flash_speed_t::ESP_FLASH_SPEED_MAX (C++ enumerator), 1406
esp_flash_spi_device_config_t (C++ struct), 1393
esp_flash_spi_device_config_t::cs_id (C++ member), 1394
esp_flash_spi_device_config_t::cs_io_num (C++ member), 1394
esp_flash_spi_device_config_t::host_id (C++ member), 1394
esp_flash_spi_device_config_t::input_delay_ns (C++ member), 1394
esp_flash_spi_device_config_t::io_mode (C++ member), 1394
esp_flash_spi_device_config_t::speed (C++ member), 1394
esp_flash_t (C++ struct), 1400
esp_flash_t (C++ type), 1401
esp_flash_t::busy (C++ member), 1400
esp_flash_t::chip_drv (C++ member), 1400
esp_flash_t::chip_id (C++ member), 1400
esp_flash_t::host (C++ member), 1400
esp_flash_t::os_func (C++ member), 1400
esp_flash_t::os_func_data (C++ member), 1400
esp_flash_t::read_mode (C++ member), 1400
esp_flash_t::reserved_flags (C++ member), 1401
esp_flash_t::size (C++ member), 1400
esp_flash_write (C++ function), 1398
esp_flash_write_encrypted (C++ function), 1398
esp_flash_write_protect_crypt_cnt (C++ function), 1415
esp_freertos_idle_cb_t (C++ type), 1637
esp_freertos_tick_cb_t (C++ type), 1637
ESP_GAP_BLE_ADD_WHITELIST_COMPLETE_EVT (C macro), 212
esp_gap_ble_cb_event_t (C++ enum), 216
esp_gap_ble_cb_event_t::ESP_GAP_BLE_ADV_DATA_RAW_ (C++ enumerator), 216
esp_gap_ble_cb_event_t::ESP_GAP_BLE_ADV_DATA_SET_ (C++ enumerator), 216
esp_gap_ble_cb_event_t::ESP_GAP_BLE_ADV_START_COM (C++ enumerator), 216
esp_gap_ble_cb_event_t::ESP_GAP_BLE_ADV_STOP_COMP (C++ enumerator), 217
esp_gap_ble_cb_event_t::ESP_GAP_BLE_ADV_TERMINATE (C++ enumerator), 220
esp_gap_ble_cb_event_t::ESP_GAP_BLE_AUTH_CMPL_EVT (C++ enumerator), 216
esp_gap_ble_cb_event_t::ESP_GAP_BLE_CHANNEL_SELET (C++ enumerator), 220
esp_gap_ble_cb_event_t::ESP_GAP_BLE_CLEAR_BOND_DE (C++ enumerator), 217
esp_gap_ble_cb_event_t::ESP_GAP_BLE_EVT_MAX (C++ enumerator), 220
esp_gap_ble_cb_event_t::ESP_GAP_BLE_EXT_ADV_DATA_ (C++ enumerator), 218

esp_gap_ble_cb_event_t::ESP_GAP_BLE_EXT_ADV_REPORT_EVT (C++ enumerator), 219
esp_gap_ble_cb_event_t::ESP_GAP_BLE_EXT_ADV_SET_COMPLETE_EVT (C++ enumerator), 218
esp_gap_ble_cb_event_t::ESP_GAP_BLE_EXT_ADV_SET_PARAMS_COMPLETE_EVT (C++ enumerator), 218
esp_gap_ble_cb_event_t::ESP_GAP_BLE_EXT_ADV_SET_RAND_ADDR_COMPLETE_EVT (C++ enumerator), 218
esp_gap_ble_cb_event_t::ESP_GAP_BLE_EXT_ADV_SET_REMOVE_COMPLETE_EVT (C++ enumerator), 218
esp_gap_ble_cb_event_t::ESP_GAP_BLE_EXT_ADV_START_COMPLETE_EVT (C++ enumerator), 218
esp_gap_ble_cb_event_t::ESP_GAP_BLE_EXT_ADV_STOP_COMPLETE_EVT (C++ enumerator), 218
esp_gap_ble_cb_event_t::ESP_GAP_BLE_EXT_SCAN_RSP_DATA_SET_COMPLETE_EVT (C++ enumerator), 218
esp_gap_ble_cb_event_t::ESP_GAP_BLE_EXT_SCAN_START_COMPLETE_EVT (C++ enumerator), 219
esp_gap_ble_cb_event_t::ESP_GAP_BLE_EXT_SCAN_STOP_COMPLETE_EVT (C++ enumerator), 219
esp_gap_ble_cb_event_t::ESP_GAP_BLE_GET_BOND_DEV_COMPLETE_EVT (C++ enumerator), 217
esp_gap_ble_cb_event_t::ESP_GAP_BLE_KEY_EVT (C++ enumerator), 216
esp_gap_ble_cb_event_t::ESP_GAP_BLE_LOCAL_ER_EVT (C++ enumerator), 217
esp_gap_ble_cb_event_t::ESP_GAP_BLE_LOCAL_IR_EVT (C++ enumerator), 217
esp_gap_ble_cb_event_t::ESP_GAP_BLE_NC_REQ_EVT (C++ enumerator), 217
esp_gap_ble_cb_event_t::ESP_GAP_BLE_OOB_REQ_EVT (C++ enumerator), 217
esp_gap_ble_cb_event_t::ESP_GAP_BLE_PASSKEY_NOTIF_EVT (C++ enumerator), 217
esp_gap_ble_cb_event_t::ESP_GAP_BLE_PASSKEY_REQ_EVT (C++ enumerator), 217
esp_gap_ble_cb_event_t::ESP_GAP_BLE_PERIODIC_ADV_ADD_DEV_COMPLETE_EVT (C++ enumerator), 219
esp_gap_ble_cb_event_t::ESP_GAP_BLE_PERIODIC_ADV_CLEAR_DEV_COMPLETE_EVT (C++ enumerator), 219
esp_gap_ble_cb_event_t::ESP_GAP_BLE_PERIODIC_ADV_CREATE_SYNC_COMPLETE_EVT (C++ enumerator), 219
esp_gap_ble_cb_event_t::ESP_GAP_BLE_PERIODIC_ADV_DATA_SET_COMPLETE_EVT (C++ enumerator), 219
esp_gap_ble_cb_event_t::ESP_GAP_BLE_PERIODIC_ADV_REMOVE_DEV_COMPLETE_EVT (C++ enumerator), 219
esp_gap_ble_cb_event_t::ESP_GAP_BLE_PERIODIC_ADV_RECV_ENABLE_COMPLETE_EVT (C++ enumerator), 219
esp_gap_ble_cb_event_t::ESP_GAP_BLE_PERIODIC_ADV_SET_PARAMS_COMPLETE_EVT (C++ enumerator), 219
esp_gap_ble_cb_event_t::ESP_GAP_BLE_PERIODIC_ADV_SYNC_CANCEL_COMPLETE_EVT (C++ enumerator), 219
esp_gap_ble_cb_event_t::ESP_GAP_BLE_PERIODIC_ADV_SYNC_ESTAB_EVT (C++ enumerator), 220
esp_gap_ble_cb_event_t::ESP_GAP_BLE_PERIODIC_ADV_SYNC_LOST_EVT (C++ enumerator), 220
esp_gap_ble_cb_event_t::ESP_GAP_BLE_PERIODIC_ADV_SYNC_TERMINATE_EVT (C++ enumerator), 220
esp_gap_ble_cb_event_t::ESP_GAP_BLE_PHY_UPDATE_COMPLETE_EVT (C++ enumerator), 220
esp_gap_ble_cb_event_t::ESP_GAP_BLE_PREFER_EXT_CONN_PARAMS_SET_COMPLETE_EVT (C++ enumerator), 220
esp_gap_ble_cb_event_t::ESP_GAP_BLE_READ_PHY_COMPLETE_EVT (C++ enumerator), 220
esp_gap_ble_cb_event_t::ESP_GAP_BLE_READ_RSSI_COMPLETE_EVT (C++ enumerator), 220
esp_gap_ble_cb_event_t::ESP_GAP_BLE_REMOVE_BOND_DEV_COMPLETE_EVT (C++ enumerator), 220
esp_gap_ble_cb_event_t::ESP_GAP_BLE_SCAN_PARAM_SET_COMPLETE_EVT (C++ enumerator), 220
esp_gap_ble_cb_event_t::ESP_GAP_BLE_SCAN_REQ_RECEIVED_EVT (C++ enumerator), 220
esp_gap_ble_cb_event_t::ESP_GAP_BLE_SCAN_RESULT_EVT (C++ enumerator), 220
esp_gap_ble_cb_event_t::ESP_GAP_BLE_SCAN_RSP_DATA_RAW_SET_COMPLETE_EVT (C++ enumerator), 220
esp_gap_ble_cb_event_t::ESP_GAP_BLE_SCAN_RSP_DATA_SET_COMPLETE_EVT (C++ enumerator), 220
esp_gap_ble_cb_event_t::ESP_GAP_BLE_SCAN_START_COMPLETE_EVT (C++ enumerator), 220
esp_gap_ble_cb_event_t::ESP_GAP_BLE_SCAN_STOP_COMPLETE_EVT (C++ enumerator), 220
esp_gap_ble_cb_event_t::ESP_GAP_BLE_SCAN_TIMEOUT_EVT (C++ enumerator), 220
esp_gap_ble_cb_event_t::ESP_GAP_BLE_SEC_REQ_EVT (C++ enumerator), 220
esp_gap_ble_cb_event_t::ESP_GAP_BLE_SET_CHANNELS_EVT (C++ enumerator), 220
esp_gap_ble_cb_event_t::ESP_GAP_BLE_SET_EXT_SCAN_PARAM_COMPLETE_EVT (C++ enumerator), 220
esp_gap_ble_cb_event_t::ESP_GAP_BLE_SET_LOCAL_PRIVACY_COMPLETE_EVT (C++ enumerator), 220
esp_gap_ble_cb_event_t::ESP_GAP_BLE_SET_PKT_LENGTH_COMPLETE_EVT (C++ enumerator), 220
esp_gap_ble_cb_event_t::ESP_GAP_BLE_SET_PREFERED_DEFAULT_PHY_COMPLETE_EVT (C++ enumerator), 220
esp_gap_ble_cb_event_t::ESP_GAP_BLE_SET_PREFERED_PHY_COMPLETE_EVT (C++ enumerator), 220
esp_gap_ble_cb_event_t::ESP_GAP_BLE_SET_STATIC_RAND_ADDR_EVT (C++ enumerator), 220
esp_gap_ble_cb_event_t::ESP_GAP_BLE_UPDATE_CONN_PARAMS_EVT (C++ enumerator), 220
esp_gap_ble_cb_event_t::ESP_GAP_BLE_UPDATE_DUPLICATE_EXCEPTIONAL_LIST_COMPLETE_EVT (C++ enumerator), 220
esp_gap_ble_cb_event_t::ESP_GAP_BLE_UPDATE_WHITELIST_COMPLETE_EVT (C++ enumerator), 220
esp_gap_ble_cb_event_t::ESP_GAP_BLE_VENDOR_CMD_COMPLETE_EVT (C++ enumerator), 220
esp_gap_ble_channels (C++ type), 215
esp_gap_ble_set_authorization (C++ function), 212
esp_gap_ble_set_channels (C++ function), 211

172
esp_gap_conn_params_t (C++ struct), 195
esp_gap_conn_params_t::interval (C++ member), 196
esp_gap_conn_params_t::latency (C++ member), 196
esp_gap_conn_params_t::timeout (C++ member), 196
esp_gap_search_evt_t (C++ enum), 225
esp_gap_search_evt_t::ESP_GAP_SEARCH_DISC_CMPL_EVT (C++ enumerator), 225
esp_gap_search_evt_t::ESP_GAP_SEARCH_DISC_BLE_RES_EVT (C++ enumerator), 225
esp_gap_search_evt_t::ESP_GAP_SEARCH_DISC_CMPL_EVT (C++ enumerator), 225
esp_gap_search_evt_t::ESP_GAP_SEARCH_DISC_RES_EVT (C++ enumerator), 225
esp_gap_search_evt_t::ESP_GAP_SEARCH_INQ_CMPL_EVT (C++ enumerator), 225
esp_gap_search_evt_t::ESP_GAP_SEARCH_INQ_DISCARD_NUM_EVT (C++ enumerator), 225
esp_gap_search_evt_t::ESP_GAP_SEARCH_INQ_RES_EVT (C++ enumerator), 225
esp_gap_search_evt_t::ESP_GAP_SEARCH_SEARCH_CANCEL_CMPL_EVT (C++ enumerator), 225
ESP_GATT_ATTR_HANDLE_MAX (C macro), 237
esp_gatt_auth_req_t (C++ enum), 241
esp_gatt_auth_req_t::ESP_GATT_AUTH_REQ_MITM (C++ enumerator), 241
esp_gatt_auth_req_t::ESP_GATT_AUTH_REQ_NO_MITM (C++ enumerator), 241
esp_gatt_auth_req_t::ESP_GATT_AUTH_REQ_NONE (C++ enumerator), 241
esp_gatt_auth_req_t::ESP_GATT_AUTH_REQ_SIGNED_MITM (C++ enumerator), 241
esp_gatt_auth_req_t::ESP_GATT_AUTH_REQ_SIGNED_NO_MITM (C++ enumerator), 241
ESP_GATT_AUTO_RSP (C macro), 238
ESP_GATT_BODY_SENSOR_LOCATION (C macro), 236
ESP_GATT_CHAR_PROP_BIT_AUTH (C macro), 238
ESP_GATT_CHAR_PROP_BIT_BROADCAST (C macro), 237
ESP_GATT_CHAR_PROP_BIT_EXT_PROP (C macro), 238
ESP_GATT_CHAR_PROP_BIT_INDICATE (C macro), 238
ESP_GATT_CHAR_PROP_BIT_NOTIFY (C macro), 238
ESP_GATT_CHAR_PROP_BIT_READ (C macro), 237
ESP_GATT_CHAR_PROP_BIT_WRITE (C macro), 237
ESP_GATT_CHAR_PROP_BIT_WRITE_NR (C macro), 237
esp_gatt_char_prop_t (C++ type), 238
esp_gatt_conn_params_t (C++ struct), 230
esp_gatt_conn_params_t::interval (C++ member), 230
esp_gatt_conn_params_t::latency (C++ member), 230
esp_gatt_conn_params_t::timeout (C++ member), 230
esp_gatt_conn_reason_t (C++ enum), 240
esp_gatt_conn_reason_t::ESP_GATT_CONN_CONN_CANCEL (C++ enumerator), 241
esp_gatt_conn_reason_t::ESP_GATT_CONN_FAIL_ESTABL (C++ enumerator), 241
esp_gatt_conn_reason_t::ESP_GATT_CONN_L2C_FAILURE (C++ enumerator), 240
esp_gatt_conn_reason_t::ESP_GATT_CONN_LMP_TIMEOUT (C++ enumerator), 241
esp_gatt_conn_reason_t::ESP_GATT_CONN_NONE (C++ enumerator), 241
esp_gatt_conn_reason_t::ESP_GATT_CONN_TERMINATE_L (C++ enumerator), 241
esp_gatt_conn_reason_t::ESP_GATT_CONN_TERMINATE_P (C++ enumerator), 241
esp_gatt_conn_reason_t::ESP_GATT_CONN_TIMEOUT (C++ enumerator), 241
esp_gatt_conn_reason_t::ESP_GATT_CONN_UNKNOWN (C++ enumerator), 240
esp_gatt_db_attr_type_t (C++ enum), 242
esp_gatt_db_attr_type_t::ESP_GATT_DB_ALL (C++ enumerator), 242
esp_gatt_db_attr_type_t::ESP_GATT_DB_CHARACTERIST (C++ enumerator), 242
esp_gatt_db_attr_type_t::ESP_GATT_DB_DESCRIPTOR (C++ enumerator), 242
esp_gatt_db_attr_type_t::ESP_GATT_DB_INCLUDED_SER (C++ enumerator), 242
esp_gatt_db_attr_type_t::ESP_GATT_DB_PRIMARY_SERV (C++ enumerator), 242
esp_gatt_db_attr_type_t::ESP_GATT_DB_SECONDARY_SE (C++ enumerator), 242
ESP_GATT_HEART_RATE_CNTL_POINT (C macro), 236
ESP_GATT_HEART_RATE_MEAS (C macro), 236
esp_gatt_id_t (C++ struct), 227
esp_gatt_id_t::inst_id (C++ member), 228
esp_gatt_id_t::uuid (C++ member), 228
ESP_GATT_IF_NONE (C macro), 238
esp_gatt_if_t (C++ type), 238
ESP_GATT_ILLEGAL_HANDLE (C macro), 237
ESP_GATT_ILLEGAL_UUID (C macro), 237
ESP_GATT_MAX_ATTR_LEN (C macro), 238
ESP_GATT_MAX_READ_MULTI_HANDLES (C macro), 237
ESP_GATT_PERM_READ (C macro), 237
ESP_GATT_PERM_READ_AUTHORIZATION (C macro), 237
ESP_GATT_PERM_READ_ENC_MITM (C macro), 237
ESP_GATT_PERM_READ_ENCRYPTED (C macro), 237

esp_gatt_perm_t (*C++ type*), 238
ESP_GATT_PERM_WRITE (*C macro*), 237
ESP_GATT_PERM_WRITE_AUTHORIZATION (*C macro*), 237
ESP_GATT_PERM_WRITE_ENC_MITM (*C macro*), 237
ESP_GATT_PERM_WRITE_ENCRYPTED (*C macro*), 237
ESP_GATT_PERM_WRITE_SIGNED (*C macro*), 237
ESP_GATT_PERM_WRITE_SIGNED_MITM (*C macro*), 237
ESP_GATT_PREP_WRITE_CANCEL (*C macro*), 255
ESP_GATT_PREP_WRITE_EXEC (*C macro*), 255
esp_gatt_prep_write_type (*C++ enum*), 238
esp_gatt_prep_write_type::ESP_GATT_PREP_WRITE_CANCEL (*C++ enumerator*), 238
esp_gatt_prep_write_type::ESP_GATT_PREP_WRITE_EXEC (*C++ enumerator*), 238
ESP_GATT_RSP_BY_APP (*C macro*), 238
esp_gatt_rsp_t (*C++ union*), 227
esp_gatt_rsp_t::attr_value (*C++ member*), 227
esp_gatt_rsp_t::handle (*C++ member*), 227
esp_gatt_srvc_id_t (*C++ struct*), 228
esp_gatt_srvc_id_t::id (*C++ member*), 228
esp_gatt_srvc_id_t::is_primary (*C++ member*), 228
esp_gatt_status_t (*C++ enum*), 238
esp_gatt_status_t::ESP_GATT_ALREADY_OPEN (*C++ enumerator*), 240
esp_gatt_status_t::ESP_GATT_APP_RSP (*C++ enumerator*), 240
esp_gatt_status_t::ESP_GATT_AUTH_FAIL (*C++ enumerator*), 240
esp_gatt_status_t::ESP_GATT_BUSY (*C++ enumerator*), 239
esp_gatt_status_t::ESP_GATT_CANCEL (*C++ enumerator*), 240
esp_gatt_status_t::ESP_GATT_CCC_CFG_ERR (*C++ enumerator*), 240
esp_gatt_status_t::ESP_GATT_CMD_STARTED (*C++ enumerator*), 239
esp_gatt_status_t::ESP_GATT_CONGESTED (*C++ enumerator*), 240
esp_gatt_status_t::ESP_GATT_DB_FULL (*C++ enumerator*), 239
esp_gatt_status_t::ESP_GATT_DUP_REG (*C++ enumerator*), 240
esp_gatt_status_t::ESP_GATT_ENCRYPED_MITM (*C++ enumerator*), 240
esp_gatt_status_t::ESP_GATT_ENCRYPED_NO_MITM (*C++ enumerator*), 240
esp_gatt_status_t::ESP_GATT_ERR_UNLIKELY (*C++ enumerator*), 239
esp_gatt_status_t::ESP_GATT_ERROR (*C++ enumerator*), 239
esp_gatt_status_t::ESP_GATT_ILLEGAL_PARAMETER (*C++ enumerator*), 240
esp_gatt_status_t::ESP_GATT_INSUF_AUTHENTICATION (*C++ enumerator*), 239
esp_gatt_status_t::ESP_GATT_INSUF_AUTHORIZATION (*C++ enumerator*), 239
esp_gatt_status_t::ESP_GATT_INSUF_ENCRYPTION (*C++ enumerator*), 239
esp_gatt_status_t::ESP_GATT_INSUF_KEY_SIZE (*C++ enumerator*), 239
esp_gatt_status_t::ESP_GATT_INSUF_RESOURCE (*C++ enumerator*), 239
esp_gatt_status_t::ESP_GATT_INTERNAL_ERROR (*C++ enumerator*), 239
esp_gatt_status_t::ESP_GATT_INVALID_ATTR_LEN (*C++ enumerator*), 239
esp_gatt_status_t::ESP_GATT_INVALID_CFG (*C++ enumerator*), 240
esp_gatt_status_t::ESP_GATT_INVALID_HANDLE (*C++ enumerator*), 238
esp_gatt_status_t::ESP_GATT_INVALID_OFFSET (*C++ enumerator*), 239
esp_gatt_status_t::ESP_GATT_INVALID_PDU (*C++ enumerator*), 239
esp_gatt_status_t::ESP_GATT_MORE (*C++ enumerator*), 240
esp_gatt_status_t::ESP_GATT_NO_RESOURCES (*C++ enumerator*), 239
esp_gatt_status_t::ESP_GATT_NOT_ENCRYPTED (*C++ enumerator*), 240
esp_gatt_status_t::ESP_GATT_NOT_FOUND (*C++ enumerator*), 239
esp_gatt_status_t::ESP_GATT_NOT_LONG (*C++ enumerator*), 239
esp_gatt_status_t::ESP_GATT_OK (*C++ enumerator*), 238
esp_gatt_status_t::ESP_GATT_OUT_OF_RANGE (*C++ enumerator*), 240
esp_gatt_status_t::ESP_GATT_PENDING (*C++ enumerator*), 240
esp_gatt_status_t::ESP_GATT_PRC_IN_PROGRESS (*C++ enumerator*), 240
esp_gatt_status_t::ESP_GATT_PREPARE_Q_FULL (*C++ enumerator*), 239
esp_gatt_status_t::ESP_GATT_READ_NOT_PERMIT (*C++ enumerator*), 239
esp_gatt_status_t::ESP_GATT_REQ_NOT_SUPPORTED (*C++ enumerator*), 239
esp_gatt_status_t::ESP_GATT_SERVICE_STARTED (*C++ enumerator*), 240
esp_gatt_status_t::ESP_GATT_STACK_RSP (*C++ enumerator*), 240
esp_gatt_status_t::ESP_GATT_UNKNOWN_ERROR (*C++ enumerator*), 240
esp_gatt_status_t::ESP_GATT_UNSUPPORT_GRP_TYPE (*C++ enumerator*), 239
esp_gatt_status_t::ESP_GATT_WRITE_NOT_PERMIT (*C++ enumerator*), 239
esp_gatt_status_t::ESP_GATT_WRONG_STATE (*C++ enumerator*), 239

ESP_GATT_UUID_ALERT_LEVEL (*C macro*), 235
ESP_GATT_UUID_ALERT_NTF_SVC (*C macro*), 233
ESP_GATT_UUID_ALERT_STATUS (*C macro*), 235
ESP_GATT_UUID_Automation_IO_SVC (*C macro*), 233
ESP_GATT_UUID_BATTERY_LEVEL (*C macro*), 236
ESP_GATT_UUID_BATTERY_SERVICE_SVC (*C macro*), 233
ESP_GATT_UUID_BLOOD_PRESSURE_SVC (*C macro*), 233
ESP_GATT_UUID_BODY_COMPOSITION (*C macro*), 233
ESP_GATT_UUID_BOND_MANAGEMENT_SVC (*C macro*), 234
ESP_GATT_UUID_CHAR_AGG_FORMAT (*C macro*), 234
ESP_GATT_UUID_CHAR_CLIENT_CONFIG (*C macro*), 234
ESP_GATT_UUID_CHAR_DECLARE (*C macro*), 234
ESP_GATT_UUID_CHAR_DESCRIPTION (*C macro*), 234
ESP_GATT_UUID_CHAR_EXT_PROP (*C macro*), 234
ESP_GATT_UUID_CHAR_PRESENT_FORMAT (*C macro*), 234
ESP_GATT_UUID_CHAR_SRVR_CONFIG (*C macro*), 234
ESP_GATT_UUID_CHAR_VALID_RANGE (*C macro*), 234
ESP_GATT_UUID_CONT_GLUCOSE_MONITOR_SVC (*C macro*), 234
ESP_GATT_UUID_CSC_FEATURE (*C macro*), 237
ESP_GATT_UUID_CSC_MEASUREMENT (*C macro*), 236
ESP_GATT_UUID_CURRENT_TIME (*C macro*), 235
ESP_GATT_UUID_CURRENT_TIME_SVC (*C macro*), 233
ESP_GATT_UUID_CYCLING_POWER_SVC (*C macro*), 233
ESP_GATT_UUID_CYCLING_SPEED_CADENCE_SVC (*C macro*), 233
ESP_GATT_UUID_DEVICE_INFO_SVC (*C macro*), 233
ESP_GATT_UUID_ENV_SENSING_CONFIG_DESCR (*C macro*), 234
ESP_GATT_UUID_ENV_SENSING_MEASUREMENT_DESCR (*C macro*), 234
ESP_GATT_UUID_ENV_SENSING_TRIGGER_DESCR (*C macro*), 234
ESP_GATT_UUID_ENVIRONMENTAL_SENSING_SVC (*C macro*), 233
ESP_GATT_UUID_EXT_RPT_REF_DESCR (*C macro*), 234
ESP_GATT_UUID_FW_VERSION_STR (*C macro*), 235
ESP_GATT_UUID_GAP_CENTRAL_ADDR_RESOL (*C macro*), 235
ESP_GATT_UUID_GAP_DEVICE_NAME (*C macro*), 235
ESP_GATT_UUID_GAP_ICON (*C macro*), 235
ESP_GATT_UUID_GAP_PREF_CONN_PARAM (*C macro*), 235
ESP_GATT_UUID_GATT_SRV_CHGD (*C macro*), 235
ESP_GATT_UUID_GLUCOSE_SVC (*C macro*), 233
ESP_GATT_UUID_GM_CONTEXT (*C macro*), 235
ESP_GATT_UUID_GM_CONTROL_POINT (*C macro*), 235
ESP_GATT_UUID_GM_FEATURE (*C macro*), 235
ESP_GATT_UUID_GM_MEASUREMENT (*C macro*), 235
ESP_GATT_UUID_HEALTH_THERMOM_SVC (*C macro*), 233
ESP_GATT_UUID_HEART_RATE_SVC (*C macro*), 233
ESP_GATT_UUID_HID_BT_KB_INPUT (*C macro*), 236
ESP_GATT_UUID_HID_BT_KB_OUTPUT (*C macro*), 236
ESP_GATT_UUID_HID_BT_MOUSE_INPUT (*C macro*), 236
ESP_GATT_UUID_HID_CONTROL_POINT (*C macro*), 236
ESP_GATT_UUID_HID_INFORMATION (*C macro*), 236
ESP_GATT_UUID_HID_PROTO_MODE (*C macro*), 236
ESP_GATT_UUID_HID_REPORT (*C macro*), 236
ESP_GATT_UUID_HID_REPORT_MAP (*C macro*), 236
ESP_GATT_UUID_HID_SVC (*C macro*), 233
ESP_GATT_UUID_HW_VERSION_STR (*C macro*), 236
ESP_GATT_UUID_IEEE_DATA (*C macro*), 236
ESP_GATT_UUID_IMMEDIATE_ALERT_SVC (*C macro*), 233
ESP_GATT_UUID_INCLUDE_SERVICE (*C macro*), 234
ESP_GATT_UUID_LINK_LOSS_SVC (*C macro*), 233
ESP_GATT_UUID_LOCAL_TIME_INFO (*C macro*), 235
ESP_GATT_UUID_LOCATION_AND_NAVIGATION_SVC (*C macro*), 233
ESP_GATT_UUID_MANU_NAME (*C macro*), 236
ESP_GATT_UUID_MODEL_NUMBER_STR (*C macro*), 235
ESP_GATT_UUID_NEXT_DST_CHANGE_SVC (*C macro*), 233
ESP_GATT_UUID_NUM_DIGITALS_DESCR (*C macro*), 234
ESP_GATT_UUID_NW_STATUS (*C macro*), 235
ESP_GATT_UUID_NW_TRIGGER (*C macro*), 235
ESP_GATT_UUID_PHONE_ALERT_STATUS_SVC

(*C macro*), 233
ESP_GATT_UUID_PNP_ID (*C macro*), 236
ESP_GATT_UUID_PRI_SERVICE (*C macro*), 234
ESP_GATT_UUID_REF_TIME_INFO (*C macro*), 235
ESP_GATT_UUID_REF_TIME_UPDATE_SVC (*C macro*), 233
ESP_GATT_UUID_RINGER_CP (*C macro*), 235
ESP_GATT_UUID_RINGER_SETTING (*C macro*), 235
ESP_GATT_UUID_RPT_REF_DESCR (*C macro*), 234
ESP_GATT_UUID_RSC_FEATURE (*C macro*), 236
ESP_GATT_UUID_RSC_MEASUREMENT (*C macro*), 236
ESP_GATT_UUID_RUNNING_SPEED_CADENCE_SVC (*C macro*), 233
ESP_GATT_UUID_SC_CONTROL_POINT (*C macro*), 236
ESP_GATT_UUID_SCAN_INT_WINDOW (*C macro*), 237
ESP_GATT_UUID_SCAN_PARAMETERS_SVC (*C macro*), 233
ESP_GATT_UUID_SCAN_REFRESH (*C macro*), 237
ESP_GATT_UUID_SEC_SERVICE (*C macro*), 234
ESP_GATT_UUID_SENSOR_LOCATION (*C macro*), 236
ESP_GATT_UUID_SERIAL_NUMBER_STR (*C macro*), 235
ESP_GATT_UUID_SW_VERSION_STR (*C macro*), 236
ESP_GATT_UUID_SYSTEM_ID (*C macro*), 235
ESP_GATT_UUID_TIME_TRIGGER_DESCR (*C macro*), 234
ESP_GATT_UUID_TX_POWER_LEVEL (*C macro*), 235
ESP_GATT_UUID_TX_POWER_SVC (*C macro*), 233
ESP_GATT_UUID_USER_DATA_SVC (*C macro*), 234
ESP_GATT_UUID_VALUE_TRIGGER_DESCR (*C macro*), 234
ESP_GATT_UUID_WEIGHT_SCALE_SVC (*C macro*), 234
esp_gatt_value_t (*C++ struct*), 230
esp_gatt_value_t::auth_req (*C++ member*), 230
esp_gatt_value_t::handle (*C++ member*), 230
esp_gatt_value_t::len (*C++ member*), 230
esp_gatt_value_t::offset (*C++ member*), 230
esp_gatt_value_t::value (*C++ member*), 230
esp_gatt_write_type_t (*C++ enum*), 241
esp_gatt_write_type_t::ESP_GATT_WRITE_TYPE_NO_RSP (*C++ enumerator*), 242
esp_gatt_write_type_t::ESP_GATT_WRITE_TYPE_RSP (*C++ enumerator*), 242
esp_gattc_cb_event_t (*C++ enum*), 273
esp_gattc_cb_event_t::ESP_GATTC_ACL_EVT (*C++ enumerator*), 273
esp_gattc_cb_event_t::ESP_GATTC_ADV_DATA_EVT (*C++ enumerator*), 274
esp_gattc_cb_event_t::ESP_GATTC_ADV_VSC_EVT (*C++ enumerator*), 275
esp_gattc_cb_event_t::ESP_GATTC_BTH_SCAN_CFG_EVT (*C++ enumerator*), 274
esp_gattc_cb_event_t::ESP_GATTC_BTH_SCAN_DIS_EVT (*C++ enumerator*), 274
esp_gattc_cb_event_t::ESP_GATTC_BTH_SCAN_ENB_EVT (*C++ enumerator*), 274
esp_gattc_cb_event_t::ESP_GATTC_BTH_SCAN_PARAM_EV (*C++ enumerator*), 274
esp_gattc_cb_event_t::ESP_GATTC_BTH_SCAN_RD_EVT (*C++ enumerator*), 274
esp_gattc_cb_event_t::ESP_GATTC_BTH_SCAN_THR_EVT (*C++ enumerator*), 274
esp_gattc_cb_event_t::ESP_GATTC_CANCEL_OPEN_EVT (*C++ enumerator*), 274
esp_gattc_cb_event_t::ESP_GATTC_CFG_MTU_EVT (*C++ enumerator*), 274
esp_gattc_cb_event_t::ESP_GATTC_CLOSE_EVT (*C++ enumerator*), 273
esp_gattc_cb_event_t::ESP_GATTC_CONGEST_EVT (*C++ enumerator*), 274
esp_gattc_cb_event_t::ESP_GATTC_CONNECT_EVT (*C++ enumerator*), 275
esp_gattc_cb_event_t::ESP_GATTC_DIS_SRVC_CMPL_EVT (*C++ enumerator*), 275
esp_gattc_cb_event_t::ESP_GATTC_DISCONNECT_EVT (*C++ enumerator*), 275
esp_gattc_cb_event_t::ESP_GATTC_ENC_CMPL_CB_EVT (*C++ enumerator*), 274
esp_gattc_cb_event_t::ESP_GATTC_EXEC_EVT (*C++ enumerator*), 273
esp_gattc_cb_event_t::ESP_GATTC_GET_ADDR_LIST_EVT (*C++ enumerator*), 275
esp_gattc_cb_event_t::ESP_GATTC_MULT_ADV_DATA_EVT (*C++ enumerator*), 274
esp_gattc_cb_event_t::ESP_GATTC_MULT_ADV_DIS_EVT (*C++ enumerator*), 274
esp_gattc_cb_event_t::ESP_GATTC_MULT_ADV_ENB_EVT (*C++ enumerator*), 274
esp_gattc_cb_event_t::ESP_GATTC_MULT_ADV_UPD_EVT (*C++ enumerator*), 274
esp_gattc_cb_event_t::ESP_GATTC_NOTIFY_EVT (*C++ enumerator*), 273
esp_gattc_cb_event_t::ESP_GATTC_OPEN_EVT (*C++ enumerator*), 273
esp_gattc_cb_event_t::ESP_GATTC_PREP_WRITE_EVT (*C++ enumerator*), 273
esp_gattc_cb_event_t::ESP_GATTC_QUEUE_FULL_EVT (*C++ enumerator*), 275
esp_gattc_cb_event_t::ESP_GATTC_READ_CHAR_EVT (*C++ enumerator*), 273
esp_gattc_cb_event_t::ESP_GATTC_READ_DESCR_EVT (*C++ enumerator*), 273

esp_gattc_cb_event_t::ESP_GATTC_READ_MULTIPLE_EVT (C++ enumerator), 275
esp_gattc_cb_event_t::ESP_GATTC_REG_EVT (C++ enumerator), 273
esp_gattc_cb_event_t::ESP_GATTC_REG_FOR_NOTIFY_EVT (C++ enumerator), 275
esp_gattc_cb_event_t::ESP_GATTC_SCAN_FLT_CFG_EVT (C++ enumerator), 275
esp_gattc_cb_event_t::ESP_GATTC_SCAN_FLT_PARAM_EVT (C++ enumerator), 275
esp_gattc_cb_event_t::ESP_GATTC_SCAN_FLT_STATUS_EVT (C++ enumerator), 275
esp_gattc_cb_event_t::ESP_GATTC_SEARCH_CMPL_EVT (C++ enumerator), 273
esp_gattc_cb_event_t::ESP_GATTC_SEARCH_RES_EVT (C++ enumerator), 273
esp_gattc_cb_event_t::ESP_GATTC_SET_ASSOC_EVT (C++ enumerator), 275
esp_gattc_cb_event_t::ESP_GATTC_SRVC_CHG_EVT (C++ enumerator), 274
esp_gattc_cb_event_t::ESP_GATTC_UNREG_EVT (C++ enumerator), 273
esp_gattc_cb_event_t::ESP_GATTC_UNREG_FOR_NOTIFY_EVT (C++ enumerator), 275
esp_gattc_cb_event_t::ESP_GATTC_WRITE_CHAR_EVT (C++ enumerator), 273
esp_gattc_cb_event_t::ESP_GATTC_WRITE_DESCR_EVT (C++ enumerator), 273
esp_gattc_cb_t (C++ type), 272
esp_gattc_char_elem_t (C++ struct), 232
esp_gattc_char_elem_t::char_handle (C++ member), 232
esp_gattc_char_elem_t::properties (C++ member), 232
esp_gattc_char_elem_t::uuid (C++ member), 232
esp_gattc_db_elem_t (C++ struct), 231
esp_gattc_db_elem_t::attribute_handle (C++ member), 231
esp_gattc_db_elem_t::end_handle (C++ member), 231
esp_gattc_db_elem_t::properties (C++ member), 231
esp_gattc_db_elem_t::start_handle (C++ member), 231
esp_gattc_db_elem_t::type (C++ member), 231
esp_gattc_db_elem_t::uuid (C++ member), 231
esp_gattc_descr_elem_t (C++ struct), 232
esp_gattc_descr_elem_t::handle (C++ member), 232
esp_gattc_descr_elem_t::uuid (C++ member), 232
esp_gattc_incl_svc_elem_t (C++ struct), 232
esp_gattc_incl_svc_elem_t::handle (C++ member), 232
esp_gattc_incl_svc_elem_t::incl_srvc_s_handle (C++ member), 232
esp_gattc_incl_svc_elem_t::uuid (C++ member), 232
esp_gattc_multi_t (C++ struct), 230
esp_gattc_multi_t::handles (C++ member), 231
esp_gattc_multi_t::num_attr (C++ member), 231
esp_gattc_service_elem_t (C++ struct), 231
esp_gattc_service_elem_t::end_handle (C++ member), 231
esp_gattc_service_elem_t::is_primary (C++ member), 231
esp_gattc_service_elem_t::start_handle (C++ member), 231
esp_gattc_service_elem_t::uuid (C++ member), 231
esp_gatts_attr_db_t (C++ struct), 229
esp_gatts_attr_db_t::att_desc (C++ member), 229
esp_gatts_attr_db_t::attr_control (C++ member), 229
esp_gatts_cb_event_t (C++ enum), 255
esp_gatts_cb_event_t::ESP_GATTS_ADD_CHAR_DESCR_EVT (C++ enumerator), 256
esp_gatts_cb_event_t::ESP_GATTS_ADD_CHAR_EVT (C++ enumerator), 256
esp_gatts_cb_event_t::ESP_GATTS_ADD_INCL_SRVC_EVT (C++ enumerator), 256
esp_gatts_cb_event_t::ESP_GATTS_CANCEL_OPEN_EVT (C++ enumerator), 256
esp_gatts_cb_event_t::ESP_GATTS_CLOSE_EVT (C++ enumerator), 256
esp_gatts_cb_event_t::ESP_GATTS_CONF_EVT (C++ enumerator), 255
esp_gatts_cb_event_t::ESP_GATTS_CONGEST_EVT (C++ enumerator), 256
esp_gatts_cb_event_t::ESP_GATTS_CONNECT_EVT (C++ enumerator), 256
esp_gatts_cb_event_t::ESP_GATTS_CREAT_ATTR_TAB_EVT (C++ enumerator), 257
esp_gatts_cb_event_t::ESP_GATTS_CREATE_EVT (C++ enumerator), 256
esp_gatts_cb_event_t::ESP_GATTS_DELETE_EVT (C++ enumerator), 256
esp_gatts_cb_event_t::ESP_GATTS_DISCONNECT_EVT (C++ enumerator), 256
esp_gatts_cb_event_t::ESP_GATTS_EXEC_WRITE_EVT (C++ enumerator), 255
esp_gatts_cb_event_t::ESP_GATTS_LISTEN_EVT (C++ enumerator), 256
esp_gatts_cb_event_t::ESP_GATTS_MTU_EVT (C++ enumerator), 255
esp_gatts_cb_event_t::ESP_GATTS_OPEN_EVT (C++ enumerator), 256
esp_gatts_cb_event_t::ESP_GATTS_READ_EVT

(C++ enumerator), 255
esp_gatts_cb_event_t::ESP_GATTS_REG_EVT (C++ enumerator), 255
esp_gatts_cb_event_t::ESP_GATTS_RESPONSE_EVT (C++ enumerator), 256
esp_gatts_cb_event_t::ESP_GATTS_SEND_SERVICE_CHANGE_EVT (C++ enumerator), 257
esp_gatts_cb_event_t::ESP_GATTS_SET_ATTR_VAL_EVT (C++ enumerator), 257
esp_gatts_cb_event_t::ESP_GATTS_START_EVT (C++ enumerator), 256
esp_gatts_cb_event_t::ESP_GATTS_STOP_EVT (C++ enumerator), 256
esp_gatts_cb_event_t::ESP_GATTS_UNREG_EVT (C++ enumerator), 256
esp_gatts_cb_event_t::ESP_GATTS_WRITE_EVT (C++ enumerator), 255
esp_gatts_cb_t (C++ type), 255
esp_gatts_incl128_svc_desc_t (C++ struct), 229
esp_gatts_incl128_svc_desc_t::end_hdl (C++ member), 230
esp_gatts_incl128_svc_desc_t::start_hdl (C++ member), 230
esp_gatts_incl_svc_desc_t (C++ struct), 229
esp_gatts_incl_svc_desc_t::end_hdl (C++ member), 229
esp_gatts_incl_svc_desc_t::start_hdl (C++ member), 229
esp_gatts_incl_svc_desc_t::uuid (C++ member), 229
esp_gcov_dump (C++ function), 1450
esp_get_deep_sleep_wake_stub (C++ function), 1725
esp_get_flash_encryption_mode (C++ function), 1415
esp_get_free_heap_size (C++ function), 1691
esp_get_free_internal_heap_size (C++ function), 1692
esp_get_idf_version (C++ function), 1693
esp_get_minimum_free_heap_size (C++ function), 1692
esp_hf_answer_call_cmd_callback (C++ type), 346
esp_hf_at_response_code_t (C++ enum), 353
esp_hf_at_response_code_t::ESP_HF_AT_RESPONSE_CODE_BLACKLISTED (C++ enumerator), 354
esp_hf_at_response_code_t::ESP_HF_AT_RESPONSE_CODE_BUSY (C++ enumerator), 353
esp_hf_at_response_code_t::ESP_HF_AT_RESPONSE_CODE_CME (C++ enumerator), 354
esp_hf_at_response_code_t::ESP_HF_AT_RESPONSE_CODE_DELAYED (C++ enumerator), 353
esp_hf_at_response_code_t::ESP_HF_AT_RESPONSE_CODE_ERR (C++ enumerator), 353
esp_hf_at_response_code_t::ESP_HF_AT_RESPONSE_CODE_NO_ANSWER (C++ enumerator), 353
esp_hf_at_response_code_t::ESP_HF_AT_RESPONSE_CODE_NO_CARRIER (C++ enumerator), 353
esp_hf_at_response_code_t::ESP_HF_AT_RESPONSE_CODE_OK (C++ enumerator), 353
esp_hf_at_response_code_t::ESP_HF_AT_RESPONSE_COD
esp_hf_at_response_t (C++ enum), 354
esp_hf_at_response_t::ESP_HF_AT_RESPONSE_ERROR
esp_hf_at_response_t::ESP_HF_AT_RESPONSE_OK (C++ enumerator), 354
esp_hf_audio_state_callback (C++ type), 346
esp_hf_audio_state_t (C++ enum), 348
esp_hf_audio_state_t::ESP_HF_AUDIO_STATE_CONNECTE (C++ enumerator), 348
esp_hf_audio_state_t::ESP_HF_AUDIO_STATE_CONNECTE (C++ enumerator), 348
esp_hf_audio_state_t::ESP_HF_AUDIO_STATE_CONNECTI (C++ enumerator), 348
esp_hf_audio_state_t::ESP_HF_AUDIO_STATE_DISCONNE (C++ enumerator), 348
esp_hf_btrh_cmd_t (C++ enum), 351
esp_hf_btrh_cmd_t::ESP_HF_BTRH_CMD_ACCEPT (C++ enumerator), 352
esp_hf_btrh_cmd_t::ESP_HF_BTRH_CMD_HOLD (C++ enumerator), 351
esp_hf_btrh_cmd_t::ESP_HF_BTRH_CMD_REJECT (C++ enumerator), 352
esp_hf_btrh_status_t (C++ enum), 351
esp_hf_btrh_status_t::ESP_HF_BTRH_STATUS_ACCEPTED (C++ enumerator), 351
esp_hf_btrh_status_t::ESP_HF_BTRH_STATUS_HELD (C++ enumerator), 351
esp_hf_btrh_status_t::ESP_HF_BTRH_STATUS_REJECTED (C++ enumerator), 351
esp_hf_call_addr_type_t (C++ enum), 351
esp_hf_call_addr_type_t::ESP_HF_CALL_ADDR_TYPE_IN (C++ enumerator), 351
esp_hf_call_addr_type_t::ESP_HF_CALL_ADDR_TYPE_UN (C++ enumerator), 351
esp_hf_call_held_status_t (C++ enum), 349
esp_hf_call_held_status_t::ESP_HF_CALL_HELD_STATU (C++ enumerator), 349
esp_hf_call_held_status_t::ESP_HF_CALL_HELD_STATU (C++ enumerator), 349
esp_hf_call_held_status_t::ESP_HF_CALL_HELD_STATU (C++ enumerator), 349
esp_hf_call_setup_status_t (C++ enum), 349
esp_hf_call_setup_status_t::ESP_HF_CALL_SETUP_STA (C++ enumerator), 349
esp_hf_call_setup_status_t::ESP_HF_CALL_SETUP_STA (C++ enumerator), 349
esp_hf_call_setup_status_t::ESP_HF_CALL_SETUP_STA (C++ enumerator), 349
esp_hf_call_setup_status_t::ESP_HF_CALL_SETUP_STA (C++ enumerator), 349
esp_hf_call_status_t (C++ enum), 348
esp_hf_call_status_t::ESP_HF_CALL_STATUS_CALL_IN_ (C++ enumerator), 349

esp_hf_call_status_t::ESP_HF_CALL_STATUS_NO_CALLS (C++ enumerator), 349
esp_hf_call_waiting_status_t (C++ enum), 352
esp_hf_call_waiting_status_t::ESP_HF_CALL_WAITING_ACTIVE (C++ enumerator), 352
esp_hf_call_waiting_status_t::ESP_HF_CALL_WAITING_INACTIVE (C++ enumerator), 352
esp_hf_cb_event_t (C++ enum), 379
esp_hf_cb_event_t::ESP_HF_ATA_RESPONSE_EVT (C++ enumerator), 380
esp_hf_cb_event_t::ESP_HF_AUDIO_STATE_EVT (C++ enumerator), 379
esp_hf_cb_event_t::ESP_HF_BCS_RESPONSE_EVT (C++ enumerator), 380
esp_hf_cb_event_t::ESP_HF_BVRA_RESPONSE_EVT (C++ enumerator), 379
esp_hf_cb_event_t::ESP_HF_CHUP_RESPONSE_EVT (C++ enumerator), 380
esp_hf_cb_event_t::ESP_HF_CIND_RESPONSE_EVT (C++ enumerator), 380
esp_hf_cb_event_t::ESP_HF_CLCC_RESPONSE_EVT (C++ enumerator), 380
esp_hf_cb_event_t::ESP_HF_CNUM_RESPONSE_EVT (C++ enumerator), 380
esp_hf_cb_event_t::ESP_HF_CONNECTION_STATE_EVT (C++ enumerator), 379
esp_hf_cb_event_t::ESP_HF_COPS_RESPONSE_EVT (C++ enumerator), 380
esp_hf_cb_event_t::ESP_HF_DIAL_EVT (C++ enumerator), 380
esp_hf_cb_event_t::ESP_HF_IND_UPDATE_EVT (C++ enumerator), 380
esp_hf_cb_event_t::ESP_HF_NREC_RESPONSE_EVT (C++ enumerator), 380
esp_hf_cb_event_t::ESP_HF_UNAT_RESPONSE_EVT (C++ enumerator), 380
esp_hf_cb_event_t::ESP_HF_VOLUME_CONTROL_EVT (C++ enumerator), 379
esp_hf_cb_event_t::ESP_HF_VTS_RESPONSE_EVT (C++ enumerator), 380
esp_hf_cb_event_t::ESP_HF_WBS_RESPONSE_EVT (C++ enumerator), 380
esp_hf_cb_param_t (C++ union), 374
esp_hf_cb_param_t::audio_stat (C++ member), 374
esp_hf_cb_param_t::bcs_rep (C++ member), 375
esp_hf_cb_param_t::cind (C++ member), 375
esp_hf_cb_param_t::conn_stat (C++ member), 374
esp_hf_cb_param_t::hf_audio_stat_param (C++ struct), 375
esp_hf_cb_param_t::hf_audio_stat_param::state (C++ member), 375
esp_hf_cb_param_t::hf_audio_stat_param::type (C++ member), 375
esp_hf_cb_param_t::hf_bcs_rep_param (C++ struct), 375
esp_hf_cb_param_t::hf_bcs_rep_param::mode (C++ member), 375
esp_hf_cb_param_t::hf_cind_param (C++ struct), 376
esp_hf_cb_param_t::hf_cind_param::battery_level (C++ member), 376
esp_hf_cb_param_t::hf_cind_param::call_held_statu (C++ member), 376
esp_hf_cb_param_t::hf_cind_param::call_setup_stat (C++ member), 376
esp_hf_cb_param_t::hf_cind_param::call_status (C++ member), 376
esp_hf_cb_param_t::hf_cind_param::roam (C++ member), 376
esp_hf_cb_param_t::hf_cind_param::signal_strength (C++ member), 376
esp_hf_cb_param_t::hf_cind_param::svc (C++ member), 376
esp_hf_cb_param_t::hf_conn_stat_param (C++ struct), 376
esp_hf_cb_param_t::hf_conn_stat_param::chld_feat (C++ member), 376
esp_hf_cb_param_t::hf_conn_stat_param::peer_feat (C++ member), 376
esp_hf_cb_param_t::hf_conn_stat_param::remote_bda (C++ member), 376
esp_hf_cb_param_t::hf_conn_stat_param::state (C++ member), 376
esp_hf_cb_param_t::hf_nrec_param (C++ struct), 376
esp_hf_cb_param_t::hf_nrec_param::state (C++ member), 377
esp_hf_cb_param_t::hf_out_call_param (C++ struct), 377
esp_hf_cb_param_t::hf_out_call_param::num_or_loc (C++ member), 377
esp_hf_cb_param_t::hf_out_call_param::remote_addr (C++ member), 377
esp_hf_cb_param_t::hf_unat_rep_param (C++ struct), 377
esp_hf_cb_param_t::hf_unat_rep_param::unat (C++ member), 377
esp_hf_cb_param_t::hf_volume_control_param (C++ struct), 377
esp_hf_cb_param_t::hf_volume_control_param::type (C++ member), 377
esp_hf_cb_param_t::hf_volume_control_param::volum (C++ member), 377
esp_hf_cb_param_t::hf_vra_rep_param (C++ struct), 377
esp_hf_cb_param_t::hf_vra_rep_param::remote_addr (C++ member), 377
esp_hf_cb_param_t::hf_vra_rep_param::value (C++ member), 377
esp_hf_cb_param_t::hf_vts_rep_param (C++ struct), 377
esp_hf_cb_param_t::hf_vts_rep_param::code

(*C++ member*), 378
esp_hf_cb_param_t::hf_wbs_rep_param (*C++ struct*), 378
esp_hf_cb_param_t::hf_wbs_rep_param::codec (*C++ member*), 378
esp_hf_cb_param_t::nrec (*C++ member*), 375
esp_hf_cb_param_t::out_call (*C++ member*), 375
esp_hf_cb_param_t::unat_rep (*C++ member*), 375
esp_hf_cb_param_t::volume_control (*C++ member*), 375
esp_hf_cb_param_t::vra_rep (*C++ member*), 375
esp_hf_cb_param_t::vts_rep (*C++ member*), 375
esp_hf_cb_param_t::wbs_rep (*C++ member*), 375
esp_hf_cb_t (*C++ type*), 379
esp_hf_chld_cmd_callback (*C++ type*), 347
ESP_HF_CHLD_FEAT_HOLD_ACC (*C macro*), 379
ESP_HF_CHLD_FEAT_MERGE (*C macro*), 379
ESP_HF_CHLD_FEAT_MERGE_DETACH (*C macro*), 379
ESP_HF_CHLD_FEAT_PRIV_X (*C macro*), 379
ESP_HF_CHLD_FEAT_REL (*C macro*), 378
ESP_HF_CHLD_FEAT_REL_ACC (*C macro*), 378
ESP_HF_CHLD_FEAT_REL_X (*C macro*), 378
esp_hf_chld_type_t (*C++ enum*), 353
esp_hf_chld_type_t::ESP_HF_CHLD_TYPE_HOLD_ACC (*C++ enumerator*), 353
esp_hf_chld_type_t::ESP_HF_CHLD_TYPE_MERGE (*C++ enumerator*), 353
esp_hf_chld_type_t::ESP_HF_CHLD_TYPE_MERGE_DETACH (*C++ enumerator*), 353
esp_hf_chld_type_t::ESP_HF_CHLD_TYPE_PRIV_X (*C++ enumerator*), 353
esp_hf_chld_type_t::ESP_HF_CHLD_TYPE_REL (*C++ enumerator*), 353
esp_hf_chld_type_t::ESP_HF_CHLD_TYPE_REL_ACC (*C++ enumerator*), 353
esp_hf_chld_type_t::ESP_HF_CHLD_TYPE_REL_X (*C++ enumerator*), 353
esp_hf_cind_cmd_callback (*C++ type*), 347
esp_hf_clcc_cmd_callback (*C++ type*), 347
esp_hf_client_answer_call (*C++ function*), 358
esp_hf_client_audio_state_t (*C++ enum*), 367
esp_hf_client_audio_state_t::ESP_HF_CLIENT_AUDIO_STATE_CONNECTED (*C++ enumerator*), 367
esp_hf_client_audio_state_t::ESP_HF_CLIENT_AUDIO_STATE_CONNECTED_MSBC (*C++ enumerator*), 367
esp_hf_client_audio_state_t::ESP_HF_CLIENT_AUDIO_STATE_CONNECTING (*C++ enumerator*), 367
esp_hf_client_audio_state_t::ESP_HF_CLIENT_AUDIO_STATE_DISCONNECTED (*C++ enumerator*), 367
esp_hf_client_cb_event_t (*C++ enum*), 368
esp_hf_client_cb_event_t::ESP_HF_CLIENT_AT_RESPONSE (*C++ enumerator*), 369
esp_hf_client_cb_event_t::ESP_HF_CLIENT_AUDIO_STATE_EVT (*C++ enumerator*), 368
esp_hf_client_cb_event_t::ESP_HF_CLIENT_BINP_EVT (*C++ enumerator*), 369
esp_hf_client_cb_event_t::ESP_HF_CLIENT_BSIR_EVT (*C++ enumerator*), 369
esp_hf_client_cb_event_t::ESP_HF_CLIENT_BTRH_EVT (*C++ enumerator*), 368
esp_hf_client_cb_event_t::ESP_HF_CLIENT_BVRA_EVT (*C++ enumerator*), 368
esp_hf_client_cb_event_t::ESP_HF_CLIENT_CCWA_EVT (*C++ enumerator*), 368
esp_hf_client_cb_event_t::ESP_HF_CLIENT_CIND_BATTERY_LEVEL_EVT (*C++ enumerator*), 368
esp_hf_client_cb_event_t::ESP_HF_CLIENT_CIND_CALL_EVT (*C++ enumerator*), 368
esp_hf_client_cb_event_t::ESP_HF_CLIENT_CIND_CALL_SETUP_EVT (*C++ enumerator*), 368
esp_hf_client_cb_event_t::ESP_HF_CLIENT_CIND_CALL_SETUP_EVT (*C++ enumerator*), 368
esp_hf_client_cb_event_t::ESP_HF_CLIENT_CIND_ROAM_EVT (*C++ enumerator*), 368
esp_hf_client_cb_event_t::ESP_HF_CLIENT_CIND_SERVICE_EVT (*C++ enumerator*), 368
esp_hf_client_cb_event_t::ESP_HF_CLIENT_CIND_SIGNAL_STRENGTH_EVT (*C++ enumerator*), 368
esp_hf_client_cb_event_t::ESP_HF_CLIENT_CLCC_EVT (*C++ enumerator*), 368
esp_hf_client_cb_event_t::ESP_HF_CLIENT_CLIP_EVT (*C++ enumerator*), 368
esp_hf_client_cb_event_t::ESP_HF_CLIENT_CNUM_EVT (*C++ enumerator*), 369
esp_hf_client_cb_event_t::ESP_HF_CLIENT_CONNECTION_STATE_EVT (*C++ enumerator*), 368
esp_hf_client_cb_event_t::ESP_HF_CLIENT_COPS_CURRENT_OPERATOR_EVT (*C++ enumerator*), 368
esp_hf_client_cb_event_t::ESP_HF_CLIENT_RING_IND_EVT (*C++ enumerator*), 369
esp_hf_client_cb_event_t::ESP_HF_CLIENT_VOLUME_CONTROL_EVT (*C++ enumerator*), 369
esp_hf_client_cb_param_t (*C++ union*), 360
esp_hf_client_cb_param_t::at_response (*C++ member*), 361
esp_hf_client_cb_param_t::audio_stat (*C++ member*), 360
esp_hf_client_cb_param_t::battery_level (*C++ member*), 360
esp_hf_client_cb_param_t::binp (*C++ member*), 361
esp_hf_client_cb_param_t::bsir (*C++ member*), 361
esp_hf_client_cb_param_t::btrh (*C++ member*), 360
esp_hf_client_cb_param_t::bvra (*C++ member*), 360
esp_hf_client_cb_param_t::call (*C++*

member), 360
esp_hf_client_cb_param_t::call_held (C++ member), 360
esp_hf_client_cb_param_t::call_setup (C++ member), 360
esp_hf_client_cb_param_t::ccwa (C++ member), 361
esp_hf_client_cb_param_t::clcc (C++ member), 361
esp_hf_client_cb_param_t::clip (C++ member), 360
esp_hf_client_cb_param_t::cnum (C++ member), 361
esp_hf_client_cb_param_t::conn_stat (C++ member), 360
esp_hf_client_cb_param_t::cops (C++ member), 360
esp_hf_client_cb_param_t::hf_client_at_response_param (C++ struct), 361
esp_hf_client_cb_param_t::hf_client_at_response_param::cme (C++ member), 361
esp_hf_client_cb_param_t::hf_client_at_response_param::code (C++ member), 361
esp_hf_client_cb_param_t::hf_client_audio_stat_param (C++ struct), 361
esp_hf_client_cb_param_t::hf_client_audio_stat_param::codec_mode (C++ member), 361
esp_hf_client_cb_param_t::hf_client_audio_stat_param::state (C++ member), 361
esp_hf_client_cb_param_t::hf_client_battery_ind_param (C++ struct), 361
esp_hf_client_cb_param_t::hf_client_battery_ind_param::value (C++ member), 362
esp_hf_client_cb_param_t::hf_client_bind_param (C++ struct), 362
esp_hf_client_cb_param_t::hf_client_bind_param::id (C++ member), 362
esp_hf_client_cb_param_t::hf_client_bsir_param (C++ struct), 362
esp_hf_client_cb_param_t::hf_client_bsir_param::state (C++ member), 362
esp_hf_client_cb_param_t::hf_client_btrh_param (C++ struct), 362
esp_hf_client_cb_param_t::hf_client_btrh_param::status (C++ member), 362
esp_hf_client_cb_param_t::hf_client_bvra_param (C++ struct), 362
esp_hf_client_cb_param_t::hf_client_bvra_param::value (C++ member), 362
esp_hf_client_cb_param_t::hf_client_call_ind_param (C++ struct), 362
esp_hf_client_cb_param_t::hf_client_call_ind_param::status (C++ member), 362
esp_hf_client_cb_param_t::hf_client_call_setup_ind_param (C++ struct), 362
esp_hf_client_cb_param_t::hf_client_call_setup_ind_param::status (C++ member), 363
esp_hf_client_cb_param_t::hf_client_call_setup_in (C++ member), 363
esp_hf_client_cb_param_t::hf_client_ccwa_param (C++ struct), 363
esp_hf_client_cb_param_t::hf_client_ccwa_param::n (C++ member), 363
esp_hf_client_cb_param_t::hf_client_clcc_param (C++ struct), 363
esp_hf_client_cb_param_t::hf_client_clcc_param::d (C++ member), 363
esp_hf_client_cb_param_t::hf_client_clcc_param::i (C++ member), 363
esp_hf_client_cb_param_t::hf_client_clcc_param::m (C++ member), 363
esp_hf_client_cb_param_t::hf_client_clcc_param::n (C++ member), 363
esp_hf_client_cb_param_t::hf_client_clcc_param::s (C++ member), 363
esp_hf_client_cb_param_t::hf_client_clip_param (C++ struct), 363
esp_hf_client_cb_param_t::hf_client_clip_param::n (C++ member), 364
esp_hf_client_cb_param_t::hf_client_cnum_param (C++ struct), 364
esp_hf_client_cb_param_t::hf_client_cnum_param::n (C++ member), 364
esp_hf_client_cb_param_t::hf_client_cnum_param::t (C++ member), 364
esp_hf_client_cb_param_t::hf_client_conn_stat_par (C++ struct), 364
esp_hf_client_cb_param_t::hf_client_conn_stat_par (C++ member), 364
esp_hf_client_cb_param_t::hf_client_conn_stat_par (C++ member), 364
esp_hf_client_cb_param_t::hf_client_conn_stat_par (C++ member), 364
esp_hf_client_cb_param_t::hf_client_current_opera (C++ struct), 364
esp_hf_client_cb_param_t::hf_client_current_opera (C++ member), 364
esp_hf_client_cb_param_t::hf_client_network_roami (C++ struct), 364
esp_hf_client_cb_param_t::hf_client_network_roami (C++ member), 365
esp_hf_client_cb_param_t::hf_client_service_avail (C++ struct), 365
esp_hf_client_cb_param_t::hf_client_service_avail (C++ member), 365
esp_hf_client_cb_param_t::hf_client_signal_streng (C++ struct), 365
esp_hf_client_cb_param_t::hf_client_signal_streng (C++ member), 365
esp_hf_client_cb_param_t::hf_client_volume_contro (C++ struct), 365
esp_hf_client_cb_param_t::hf_client_volume_contro

(C++ *member*), 365
esp_hf_client_cb_param_t::hf_client_volume_control (C++ *member*), 365
esp_hf_client_cb_param_t::roaming (C++ *member*), 360
esp_hf_client_cb_param_t::service_availability (C++ *member*), 360
esp_hf_client_cb_param_t::signal_strength (C++ *member*), 360
esp_hf_client_cb_param_t::volume_control (C++ *member*), 361
esp_hf_client_cb_t (C++ *type*), 367
ESP_HF_CLIENT_CHLD_FEAT_HOLD_ACC (C *macro*), 366
ESP_HF_CLIENT_CHLD_FEAT_MERGE (C *macro*), 366
ESP_HF_CLIENT_CHLD_FEAT_MERGE_DETACH (C *macro*), 366
ESP_HF_CLIENT_CHLD_FEAT_PRIV_X (C *macro*), 366
ESP_HF_CLIENT_CHLD_FEAT_REL (C *macro*), 366
ESP_HF_CLIENT_CHLD_FEAT_REL_ACC (C *macro*), 366
ESP_HF_CLIENT_CHLD_FEAT_REL_X (C *macro*), 366
esp_hf_client_connect (C++ *function*), 356
esp_hf_client_connect_audio (C++ *function*), 356
esp_hf_client_connection_state_t (C++ *enum*), 367
esp_hf_client_connection_state_t::ESP_HF_CLIENT_CONNECTION_STATE_CONNECTED (C++ *enumerator*), 367
esp_hf_client_connection_state_t::ESP_HF_CLIENT_CONNECTION_STATE_CONNECTING (C++ *enumerator*), 367
esp_hf_client_connection_state_t::ESP_HF_CLIENT_CONNECTION_STATE_DISCONNECTED (C++ *enumerator*), 367
esp_hf_client_connection_state_t::ESP_HF_CLIENT_CONNECTION_STATE_DISCONNECTING (C++ *enumerator*), 367
esp_hf_client_connection_state_t::ESP_HF_CLIENT_CONNECTION_STATE_SLC_CONNECTED (C++ *enumerator*), 367
esp_hf_client_deinit (C++ *function*), 356
esp_hf_client_dial (C++ *function*), 357
esp_hf_client_dial_memory (C++ *function*), 357
esp_hf_client_disconnect (C++ *function*), 356
esp_hf_client_disconnect_audio (C++ *function*), 356
esp_hf_client_in_band_ring_state_t (C++ *enum*), 367
esp_hf_client_in_band_ring_state_t::ESP_HF_CLIENT_IN_BAND_RINGTONE_NOT_PROVIDED (C++ *enumerator*), 367
esp_hf_client_in_band_ring_state_t::ESP_HF_CLIENT_IN_BAND_RINGTONE_PROVIDED (C++ *enumerator*), 367
esp_hf_client_incoming_data_cb_t (C++ *type*), 366
esp_hf_client_init (C++ *function*), 356
esp_hf_client_outgoing_data_cb_t (C++ *type*), 366
esp_hf_client_outgoing_data_ready (C++ *function*), 359
esp_hf_client_pcm_resample (C++ *function*), 359
esp_hf_client_pcm_resample_deinit (C++ *function*), 359
esp_hf_client_pcm_resample_init (C++ *function*), 359
ESP_HF_CLIENT_PEER_FEAT_3WAY (C *macro*), 365
ESP_HF_CLIENT_PEER_FEAT_CODEC (C *macro*), 366
ESP_HF_CLIENT_PEER_FEAT_ECC (C *macro*), 366
ESP_HF_CLIENT_PEER_FEAT_ECNR (C *macro*), 365
ESP_HF_CLIENT_PEER_FEAT_ECS (C *macro*), 366
ESP_HF_CLIENT_PEER_FEAT_ESCO_S4 (C *macro*), 366
ESP_HF_CLIENT_PEER_FEAT_EXTERR (C *macro*), 366
ESP_HF_CLIENT_PEER_FEAT_HF_IND (C *macro*), 366
ESP_HF_CLIENT_PEER_FEAT_INBAND (C *macro*), 365
ESP_HF_CLIENT_PEER_FEAT_REJECT (C *macro*), 366
ESP_HF_CLIENT_PEER_FEAT_VREC (C *macro*), 365
ESP_HF_CLIENT_PEER_FEAT_VTAG (C *macro*), 365
esp_hf_client_query_current_calls (C++ *function*), 358
esp_hf_client_query_current_operator_name (C++ *function*), 358
esp_hf_client_register_callback (C++ *function*), 356
esp_hf_client_register_data_callback (C++ *function*), 359
esp_hf_client_reject_call (C++ *function*), 358
esp_hf_client_request_last_voice_tag_number (C++ *function*), 359
esp_hf_client_retrieve_subscriber_info (C++ *function*), 358
esp_hf_client_send_btrh_cmd (C++ *function*), 358
esp_hf_client_send_chld_cmd (C++ *function*), 357
esp_hf_client_send_dtmf (C++ *function*), 358
esp_hf_client_send_xapl (C++ *function*), 359
esp_hf_client_start_voice_recognition (C++ *function*), 357
esp_hf_client_stop_voice_recognition (C++ *function*), 357

esp_hf_client_volume_update (*C++ function*), 357
esp_hf_cme_err_t (*C++ enum*), 354
esp_hf_cme_err_t::ESP_HF_CME_AG_FAILURE (*C++ enumerator*), 354
esp_hf_cme_err_t::ESP_HF_CME_DIAL_STRING_TOO_LONG (*C++ enumerator*), 355
esp_hf_cme_err_t::ESP_HF_CME_INCORRECT_PASSWORD (*C++ enumerator*), 355
esp_hf_cme_err_t::ESP_HF_CME_INVALID_CHARACTERS_IN_DIAL_STRING (*C++ enumerator*), 355
esp_hf_cme_err_t::ESP_HF_CME_INVALID_CHARACTERS_IN_TEXT_STRING (*C++ enumerator*), 355
esp_hf_cme_err_t::ESP_HF_CME_INVALID_INDEX (*C++ enumerator*), 355
esp_hf_cme_err_t::ESP_HF_CME_MEMEORY_FAILURE (*C++ enumerator*), 355
esp_hf_cme_err_t::ESP_HF_CME_MEMEORY_FULL (*C++ enumerator*), 355
esp_hf_cme_err_t::ESP_HF_CME_NETWORK_NOT_ALLOWED (*C++ enumerator*), 355
esp_hf_cme_err_t::ESP_HF_CME_NETWORK_TIMEOUT (*C++ enumerator*), 355
esp_hf_cme_err_t::ESP_HF_CME_NO_CONNECTION_TO_PHONE (*C++ enumerator*), 354
esp_hf_cme_err_t::ESP_HF_CME_NO_NETWORK_SERVICE (*C++ enumerator*), 355
esp_hf_cme_err_t::ESP_HF_CME_OPERATION_NOT_ALLOWED (*C++ enumerator*), 354
esp_hf_cme_err_t::ESP_HF_CME_OPERATION_NOT_SUPPORTED (*C++ enumerator*), 354
esp_hf_cme_err_t::ESP_HF_CME_PH_SIM_PIN_REQUIRED (*C++ enumerator*), 354
esp_hf_cme_err_t::ESP_HF_CME_SIM_BUSY (*C++ enumerator*), 354
esp_hf_cme_err_t::ESP_HF_CME_SIM_FAILURE (*C++ enumerator*), 354
esp_hf_cme_err_t::ESP_HF_CME_SIM_NOT_INSERTED (*C++ enumerator*), 354
esp_hf_cme_err_t::ESP_HF_CME_SIM_PIN2_REQUIRED (*C++ enumerator*), 355
esp_hf_cme_err_t::ESP_HF_CME_SIM_PIN_REQUIRED (*C++ enumerator*), 354
esp_hf_cme_err_t::ESP_HF_CME_SIM_PUK2_REQUIRED (*C++ enumerator*), 355
esp_hf_cme_err_t::ESP_HF_CME_SIM_PUK_REQUIRED (*C++ enumerator*), 354
esp_hf_cme_err_t::ESP_HF_CME_TEXT_STRING_TOO_LONG (*C++ enumerator*), 355
esp_hf_cnum_cmd_callback (*C++ type*), 347
esp_hf_connection_state_callback (*C++ type*), 346
esp_hf_connection_state_t (*C++ enum*), 352
esp_hf_connection_state_t::ESP_HF_CONNECTION_STATE_CONNECTED (*C++ enumerator*), 352
esp_hf_connection_state_t::ESP_HF_CONNECTION_STATE_CONNECTING (*C++ enumerator*), 352
esp_hf_connection_state_t::ESP_HF_CONNECTION_STATE_DISCONNECTED (*C++ enumerator*), 352
esp_hf_connection_state_t::ESP_HF_CONNECTION_STATE_SLC_CONNECTED (*C++ enumerator*), 353
esp_hf_connection_state_t::ESP_HF_CONNECTION_STATE_SLC_CONNECTING (*C++ enumerator*), 352
esp_hf_cops_cmd_callback (*C++ type*), 347
esp_hf_current_call_direction_t (*C++ enum*), 350
esp_hf_current_call_direction_t::ESP_HF_CURRENT_CALL_DIRECTION_INCOMING (*C++ enumerator*), 350
esp_hf_current_call_direction_t::ESP_HF_CURRENT_CALL_DIRECTION_OUTGOING (*C++ enumerator*), 350
esp_hf_current_call_mode_t (*C++ enum*), 350
esp_hf_current_call_mode_t::ESP_HF_CURRENT_CALL_MODE_DATA (*C++ enumerator*), 351
esp_hf_current_call_mode_t::ESP_HF_CURRENT_CALL_MODE_FAX (*C++ enumerator*), 351
esp_hf_current_call_mode_t::ESP_HF_CURRENT_CALL_MODE_VOICE (*C++ enumerator*), 350
esp_hf_current_call_mpty_type_t (*C++ enum*), 350
esp_hf_current_call_mpty_type_t::ESP_HF_CURRENT_CALL_MPTY_TYPE_CONFERENCE (*C++ enumerator*), 350
esp_hf_current_call_mpty_type_t::ESP_HF_CURRENT_CALL_MPTY_TYPE_SINGLE (*C++ enumerator*), 350
esp_hf_current_call_status_t (*C++ enum*), 349
esp_hf_current_call_status_t::ESP_HF_CURRENT_CALL_STATUS_ACTIVE (*C++ enumerator*), 350
esp_hf_current_call_status_t::ESP_HF_CURRENT_CALL_STATUS_ALERTING (*C++ enumerator*), 350
esp_hf_current_call_status_t::ESP_HF_CURRENT_CALL_STATUS_HELD (*C++ enumerator*), 350
esp_hf_current_call_status_t::ESP_HF_CURRENT_CALL_STATUS_HELD_BY_RESP_HOLD (*C++ enumerator*), 350
esp_hf_current_call_status_t::ESP_HF_CURRENT_CALL_STATUS_INCOMING (*C++ enumerator*), 350
esp_hf_current_call_status_t::ESP_HF_CURRENT_CALL_STATUS_WAITING (*C++ enumerator*), 350
esp_hf_dial_call_cmd_callback (*C++ type*), 346
esp_hf_dtmf_cmd_callback (*C++ type*), 346
esp_hf_hangup_call_cmd_callback (*C++ type*), 346
esp_hf_in_band_ring_state_t (*C++ enum*), 347
esp_hf_in_band_ring_state_t::ESP_HF_IN_BAND_RINGTONE_NOT_PROVIDED (*C++ enumerator*), 347
esp_hf_in_band_ring_state_t::ESP_HF_IN_BAND_RINGTONE_PROVIDED (*C++ enumerator*), 347
esp_hf_key_pressed_cmd_callback (*C++ type*), 347
esp_hf_network_state_t (*C++ enum*), 348
esp_hf_network_state_t::ESP_HF_NETWORK_STATE_AVAI

(*C++ enumerator*), 348
esp_hf_network_state_t::ESP_HF_NETWORK_STATE_NOT_AVAILABLE (*C++ enumerator*), 348
esp_hf_nrec_cmd_callback (*C++ type*), 346
esp_hf_nrec_t (*C++ enum*), 352
esp_hf_nrec_t::ESP_HF_NREC_START (*C++ enumerator*), 352
esp_hf_nrec_t::ESP_HF_NREC_STOP (*C++ enumerator*), 352
esp_hf_outgoing_data_cb_t (*C++ type*), 379
esp_hf_outgoing_data_ready (*C++ function*), 374
ESP_HF_PEER_FEAT_3WAY (*C macro*), 378
ESP_HF_PEER_FEAT_CODEC (*C macro*), 378
ESP_HF_PEER_FEAT_ECC (*C macro*), 378
ESP_HF_PEER_FEAT_ECNR (*C macro*), 378
ESP_HF_PEER_FEAT_ECS (*C macro*), 378
ESP_HF_PEER_FEAT_ESCO_S4 (*C macro*), 378
ESP_HF_PEER_FEAT_EXTERR (*C macro*), 378
ESP_HF_PEER_FEAT_HF_IND (*C macro*), 378
ESP_HF_PEER_FEAT_INBAND (*C macro*), 378
ESP_HF_PEER_FEAT_REJECT (*C macro*), 378
ESP_HF_PEER_FEAT_VREC (*C macro*), 378
ESP_HF_PEER_FEAT_VTAG (*C macro*), 378
esp_hf_roaming_status_t (*C++ enum*), 349
esp_hf_roaming_status_t::ESP_HF_ROAMING_STATUS_ACTIVE (*C++ enumerator*), 349
esp_hf_roaming_status_t::ESP_HF_ROAMING_STATUS_INACTIVE (*C++ enumerator*), 349
esp_hf_service_type_t (*C++ enum*), 348
esp_hf_service_type_t::ESP_HF_SERVICE_TYPE_HOME (*C++ enumerator*), 348
esp_hf_service_type_t::ESP_HF_SERVICE_TYPE_ROAMING (*C++ enumerator*), 348
esp_hf_subscriber_service_type_t (*C++ enum*), 351
esp_hf_subscriber_service_type_t::ESP_HF_SUBSCRIBER_SERVICE_TYPE_FAX (*C++ enumerator*), 351
esp_hf_subscriber_service_type_t::ESP_HF_SUBSCRIBER_SERVICE_TYPE_UNKNOWN (*C++ enumerator*), 351
esp_hf_subscriber_service_type_t::ESP_HF_SUBSCRIBER_SERVICE_TYPE_VOICE (*C++ enumerator*), 351
esp_hf_unat_response (*C++ function*), 371
esp_hf_unknown_at_cmd_callback (*C++ type*), 347
esp_hf_volume_cmd_callback (*C++ type*), 346
esp_hf_volume_control_target_t (*C++ enum*), 347
esp_hf_volume_control_target_t::ESP_HF_VOLUME_CONTROL_TARGET_MIC (*C++ enumerator*), 348
esp_hf_volume_control_target_t::ESP_HF_VOLUME_CONTROL_TARGET_SPK (*C++ enumerator*), 347
esp_hf_volume_type_t (*C++ enum*), 348
esp_hf_volume_type_t::ESP_HF_VOLUME_TYPE_MIC (*C++ enumerator*), 348
esp_hf_volume_type_t::ESP_HF_VOLUME_TYPE_SPK (*C++ enumerator*), 348
esp_hf_vr_cmd_callback (*C++ type*), 346
esp_hf_vr_state_t (*C++ enum*), 347
esp_hf_vr_state_t::ESP_HF_VR_STATE_DISABLED (*C++ enumerator*), 347
esp_hf_vr_state_t::ESP_HF_VR_STATE_ENABLED (*C++ enumerator*), 347
esp_hf_wbs_callback (*C++ type*), 346
esp_hf_wbs_config_t (*C++ enum*), 352
esp_hf_wbs_config_t::ESP_HF_WBS_NO (*C++ enumerator*), 352
esp_hf_wbs_config_t::ESP_HF_WBS_NONE (*C++ enumerator*), 352
esp_hf_wbs_config_t::ESP_HF_WBS_YES (*C++ enumerator*), 352
esp_himem_alloc (*C++ function*), 1666
esp_himem_alloc_map_range (*C++ function*), 1667
ESP_HIMEM_BLKSZ (*C macro*), 1668
esp_himem_free (*C++ function*), 1667
esp_himem_free_map_range (*C++ function*), 1667
esp_himem_get_free_size (*C++ function*), 1668
esp_himem_get_phys_size (*C++ function*), 1668
esp_himem_handle_t (*C++ type*), 1668
esp_himem_map (*C++ function*), 1667
ESP_HIMEM_MAPFLAG_RO (*C macro*), 1668
esp_himem_range_t (*C++ type*), 1668
esp_himem_reserved_area_size (*C++ function*), 1668
esp_himem_unmap (*C++ function*), 1667
esp_http_client_add_auth (*C++ function*), 1186
esp_http_client_auth_type_t (*C++ enum*), 1193
esp_http_client_auth_type_t::HTTP_AUTH_TYPE_BASIC (*C++ enumerator*), 1193
esp_http_client_auth_type_t::HTTP_AUTH_TYPE_DIGEST (*C++ enumerator*), 1194
esp_http_client_auth_type_t::HTTP_AUTH_TYPE_NONE (*C++ enumerator*), 1193
esp_http_client_cleanup (*C++ function*), 1186
esp_http_client_close (*C++ function*), 1186
esp_http_client_config_t (*C++ struct*), 1188
esp_http_client_config_t::auth_type (*C++ member*), 1188
esp_http_client_config_t::buffer_size (*C++ member*), 1190
esp_http_client_config_t::buffer_size_tx (*C++ member*), 1190
esp_http_client_config_t::cert_len (*C++ member*), 1189
esp_http_client_config_t::cert_pem (*C++ member*), 1189
esp_http_client_config_t::client_cert_len (*C++ member*), 1189
esp_http_client_config_t::client_cert_pem

(C++ member), 1189
esp_http_client_config_t::client_key_len (C++ member), 1189
esp_http_client_config_t::client_key_password (C++ member), 1189
esp_http_client_config_t::client_key_password_len (C++ member), 1189
esp_http_client_config_t::client_key_pem (C++ member), 1189
esp_http_client_config_t::crt_bundle_attach (C++ member), 1190
esp_http_client_config_t::disable_auto_redirect (C++ member), 1189
esp_http_client_config_t::event_handler (C++ member), 1190
esp_http_client_config_t::host (C++ member), 1188
esp_http_client_config_t::if_name (C++ member), 1190
esp_http_client_config_t::is_async (C++ member), 1190
esp_http_client_config_t::keep_alive_count (C++ member), 1190
esp_http_client_config_t::keep_alive_enable (C++ member), 1190
esp_http_client_config_t::keep_alive_idle (C++ member), 1190
esp_http_client_config_t::keep_alive_interval (C++ member), 1190
esp_http_client_config_t::max_authorization_retries (C++ member), 1189
esp_http_client_config_t::max_redirection_count (C++ member), 1189
esp_http_client_config_t::method (C++ member), 1189
esp_http_client_config_t::password (C++ member), 1188
esp_http_client_config_t::path (C++ member), 1189
esp_http_client_config_t::port (C++ member), 1188
esp_http_client_config_t::query (C++ member), 1189
esp_http_client_config_t::skip_cert_common_name_check (C++ member), 1190
esp_http_client_config_t::timeout_ms (C++ member), 1189
esp_http_client_config_t::transport_type (C++ member), 1190
esp_http_client_config_t::url (C++ member), 1188
esp_http_client_config_t::use_global_ca_store (C++ member), 1190
esp_http_client_config_t::user_agent (C++ member), 1189
esp_http_client_config_t::user_data (C++ member), 1190
esp_http_client_config_t::username (C++ member), 1188
esp_http_client_delete_header (C++ function), 1185
esp_http_client_event (C++ struct), 1188
esp_http_client_event::client (C++ member), 1188
esp_http_client_event::data (C++ member), 1188
esp_http_client_event::data_len (C++ member), 1188
esp_http_client_event::event_id (C++ member), 1188
esp_http_client_event::header_key (C++ member), 1188
esp_http_client_event::header_value (C++ member), 1188
esp_http_client_event::user_data (C++ member), 1188
esp_http_client_event_handle_t (C++ type), 1191
esp_http_client_event_id_t (C++ enum), 1191
esp_http_client_event_id_t::HTTP_EVENT_DISCONNECT (C++ enumerator), 1192
esp_http_client_event_id_t::HTTP_EVENT_ERROR (C++ enumerator), 1191
esp_http_client_event_id_t::HTTP_EVENT_HEADER_SEN (C++ enumerator), 1192
esp_http_client_event_id_t::HTTP_EVENT_HEADERS_SE (C++ enumerator), 1192
esp_http_client_event_id_t::HTTP_EVENT_ON_CONNECT (C++ enumerator), 1191
esp_http_client_event_id_t::HTTP_EVENT_ON_DATA (C++ enumerator), 1192
esp_http_client_event_id_t::HTTP_EVENT_ON_FINISH (C++ enumerator), 1192
esp_http_client_event_id_t::HTTP_EVENT_ON_HEADER (C++ enumerator), 1192
esp_http_client_event_t (C++ type), 1191
esp_http_client_fetch_headers (C++ function), 1185
esp_http_client_flush_response (C++ function), 1187
esp_http_client_get_chunk_length (C++ function), 1187
esp_http_client_get_content_length (C++ function), 1186
esp_http_client_get_errno (C++ function), 1184
esp_http_client_get_header (C++ function), 1183
esp_http_client_get_password (C++ function), 1184
esp_http_client_get_post_field (C++ function), 1183
esp_http_client_get_status_code (C++ function), 1186
esp_http_client_get_transport_type

(C++ *function*), 1186
esp_http_client_get_url (C++ *function*), 1187
esp_http_client_get_username (C++ *function*), 1183
esp_http_client_handle_t (C++ *type*), 1191
esp_http_client_init (C++ *function*), 1182
esp_http_client_is_chunked_response (C++ *function*), 1185
esp_http_client_is_complete_data_received (C++ *function*), 1187
esp_http_client_method_t (C++ *enum*), 1192
esp_http_client_method_t::HTTP_METHOD_COPY (C++ *enumerator*), 1193
esp_http_client_method_t::HTTP_METHOD_DELETE (C++ *enumerator*), 1192
esp_http_client_method_t::HTTP_METHOD_GET (C++ *enumerator*), 1192
esp_http_client_method_t::HTTP_METHOD_HEAD (C++ *enumerator*), 1193
esp_http_client_method_t::HTTP_METHOD_LOCK (C++ *enumerator*), 1193
esp_http_client_method_t::HTTP_METHOD_MAX (C++ *enumerator*), 1193
esp_http_client_method_t::HTTP_METHOD_MKCOL (C++ *enumerator*), 1193
esp_http_client_method_t::HTTP_METHOD_MOVE (C++ *enumerator*), 1193
esp_http_client_method_t::HTTP_METHOD_NOTIFY (C++ *enumerator*), 1193
esp_http_client_method_t::HTTP_METHOD_OPTIONS (C++ *enumerator*), 1193
esp_http_client_method_t::HTTP_METHOD_PATCH (C++ *enumerator*), 1192
esp_http_client_method_t::HTTP_METHOD_POST (C++ *enumerator*), 1192
esp_http_client_method_t::HTTP_METHOD_PROPFIND (C++ *enumerator*), 1193
esp_http_client_method_t::HTTP_METHOD_PROPPATCH (C++ *enumerator*), 1193
esp_http_client_method_t::HTTP_METHOD_PUT (C++ *enumerator*), 1192
esp_http_client_method_t::HTTP_METHOD_SUBSCRIBE (C++ *enumerator*), 1193
esp_http_client_method_t::HTTP_METHOD_UNLOCK (C++ *enumerator*), 1193
esp_http_client_method_t::HTTP_METHOD_UNSUBSCRIBE (C++ *enumerator*), 1193
esp_http_client_open (C++ *function*), 1185
esp_http_client_perform (C++ *function*), 1182
esp_http_client_read (C++ *function*), 1185
esp_http_client_read_response (C++ *function*), 1187
esp_http_client_set_authtype (C++ *function*), 1184
esp_http_client_set_header (C++ *function*), 1183
esp_http_client_set_method (C++ *function*), 1184
esp_http_client_set_password (C++ *function*), 1184
esp_http_client_set_post_field (C++ *function*), 1183
esp_http_client_set_redirection (C++ *function*), 1186
esp_http_client_set_timeout_ms (C++ *function*), 1184
esp_http_client_set_url (C++ *function*), 1182
esp_http_client_set_username (C++ *function*), 1183
esp_http_client_transport_t (C++ *enum*), 1192
esp_http_client_transport_t::HTTP_TRANSPORT_OVER_ (C++ *enumerator*), 1192
esp_http_client_transport_t::HTTP_TRANSPORT_OVER_ (C++ *enumerator*), 1192
esp_http_client_transport_t::HTTP_TRANSPORT_UNKNO (C++ *enumerator*), 1192
esp_http_client_write (C++ *function*), 1185
esp_https_ota (C++ *function*), 1479
esp_https_ota_abort (C++ *function*), 1481
esp_https_ota_begin (C++ *function*), 1480
esp_https_ota_config_t (C++ *struct*), 1482
esp_https_ota_config_t::bulk_flash_erase (C++ *member*), 1482
esp_https_ota_config_t::http_client_init_cb (C++ *member*), 1482
esp_https_ota_config_t::http_config (C++ *member*), 1482
esp_https_ota_config_t::max_http_request_size (C++ *member*), 1483
esp_https_ota_config_t::partial_http_download (C++ *member*), 1482
esp_https_ota_finish (C++ *function*), 1481
esp_https_ota_get_image_len_read (C++ *function*), 1482
esp_https_ota_get_image_size (C++ *function*), 1482
esp_https_ota_get_img_desc (C++ *function*), 1481
esp_https_ota_handle_t (C++ *type*), 1483
esp_https_ota_is_complete_data_received (C++ *function*), 1481
esp_https_ota_perform (C++ *function*), 1480
esp_https_server_user_cb (C++ *type*), 1223
esp_https_server_user_cb_arg (C++ *struct*), 1221
esp_https_server_user_cb_arg::tls (C++ *member*), 1221
esp_https_server_user_cb_arg_t (C++ *type*), 1223
ESP_IDF_VERSION (C *macro*), 1693
ESP_IDF_VERSION_MAJOR (C *macro*), 1693
ESP_IDF_VERSION_MINOR (C *macro*), 1693

ESP_IDF_VERSION_PATCH (*C macro*), 1693
ESP_IDF_VERSION_VAL (*C macro*), 1693
esp_image_flash_size_t (*C++ enum*), 1445
esp_image_flash_size_t::ESP_IMAGE_FLASH_SIZE_128MB (*C++ enumerator*), 1446
esp_image_flash_size_t::ESP_IMAGE_FLASH_SIZE_16MB (*C++ enumerator*), 1446
esp_image_flash_size_t::ESP_IMAGE_FLASH_SIZE_1MB (*C++ enumerator*), 1445
esp_image_flash_size_t::ESP_IMAGE_FLASH_SIZE_2MB (*C++ enumerator*), 1445
esp_image_flash_size_t::ESP_IMAGE_FLASH_SIZE_32MB (*C++ enumerator*), 1446
esp_image_flash_size_t::ESP_IMAGE_FLASH_SIZE_4MB (*C++ enumerator*), 1445
esp_image_flash_size_t::ESP_IMAGE_FLASH_SIZE_64MB (*C++ enumerator*), 1446
esp_image_flash_size_t::ESP_IMAGE_FLASH_SIZE_8MB (*C++ enumerator*), 1445
esp_image_flash_size_t::ESP_IMAGE_FLASH_SIZE_MAX (*C++ enumerator*), 1446
ESP_IMAGE_HEADER_MAGIC (*C macro*), 1444
esp_image_header_t (*C++ struct*), 1442
esp_image_header_t::chip_id (*C++ member*), 1442
esp_image_header_t::entry_addr (*C++ member*), 1442
esp_image_header_t::hash_appended (*C++ member*), 1443
esp_image_header_t::magic (*C++ member*), 1442
esp_image_header_t::min_chip_rev (*C++ member*), 1443
esp_image_header_t::reserved (*C++ member*), 1443
esp_image_header_t::segment_count (*C++ member*), 1442
esp_image_header_t::spi_mode (*C++ member*), 1442
esp_image_header_t::spi_pin_drv (*C++ member*), 1442
esp_image_header_t::spi_size (*C++ member*), 1442
esp_image_header_t::spi_speed (*C++ member*), 1442
esp_image_header_t::wp_pin (*C++ member*), 1442
ESP_IMAGE_MAX_SEGMENTS (*C macro*), 1444
esp_image_segment_header_t (*C++ struct*), 1443
esp_image_segment_header_t::data_len (*C++ member*), 1443
esp_image_segment_header_t::load_addr (*C++ member*), 1443
esp_image_spi_freq_t (*C++ enum*), 1445
esp_image_spi_freq_t::ESP_IMAGE_SPI_SPEED_20M (*C++ enumerator*), 1445
esp_image_spi_freq_t::ESP_IMAGE_SPI_SPEED_40M (*C++ enumerator*), 1445
esp_image_spi_freq_t::ESP_IMAGE_SPI_SPEED_80M (*C++ enumerator*), 1445
esp_image_spi_mode_t (*C++ enum*), 1444
esp_image_spi_mode_t::ESP_IMAGE_SPI_MODE_DIO (*C++ enumerator*), 1445
esp_image_spi_mode_t::ESP_IMAGE_SPI_MODE_DOUT (*C++ enumerator*), 1445
esp_image_spi_mode_t::ESP_IMAGE_SPI_MODE_FAST_READ (*C++ enumerator*), 1445
esp_image_spi_mode_t::ESP_IMAGE_SPI_MODE_QIO (*C++ enumerator*), 1444
esp_image_spi_mode_t::ESP_IMAGE_SPI_MODE_QOUT (*C++ enumerator*), 1445
esp_image_spi_mode_t::ESP_IMAGE_SPI_MODE_SLOW_READ (*C++ enumerator*), 1445
esp_int_wdt_init (*C++ function*), 1729
esp_intr_alloc (*C++ function*), 1677
esp_intr_alloc_intrstatus (*C++ function*), 1677
ESP_INTR_DISABLE (*C macro*), 1681
esp_intr_disable (*C++ function*), 1678
esp_intr_disable_source (*C++ function*), 1679
ESP_INTR_ENABLE (*C macro*), 1681
esp_intr_enable (*C++ function*), 1679
esp_intr_enable_source (*C++ function*), 1679
ESP_INTR_FLAG_EDGE (*C macro*), 1680
ESP_INTR_FLAG_HIGH (*C macro*), 1680
ESP_INTR_FLAG_INTRDISABLED (*C macro*), 1680
ESP_INTR_FLAG_IRAM (*C macro*), 1680
ESP_INTR_FLAG_LEVEL1 (*C macro*), 1679
ESP_INTR_FLAG_LEVEL2 (*C macro*), 1679
ESP_INTR_FLAG_LEVEL3 (*C macro*), 1680
ESP_INTR_FLAG_LEVEL4 (*C macro*), 1680
ESP_INTR_FLAG_LEVEL5 (*C macro*), 1680
ESP_INTR_FLAG_LEVEL6 (*C macro*), 1680
ESP_INTR_FLAG_LEVELMASK (*C macro*), 1680
ESP_INTR_FLAG_LOWMED (*C macro*), 1680
ESP_INTR_FLAG_NMI (*C macro*), 1680
ESP_INTR_FLAG_SHARED (*C macro*), 1680
esp_intr_flags_to_level (*C++ function*), 1679
esp_intr_free (*C++ function*), 1678
esp_intr_get_cpu (*C++ function*), 1678
esp_intr_get_intno (*C++ function*), 1678
esp_intr_mark_shared (*C++ function*), 1677
esp_intr_noniram_disable (*C++ function*), 1679
esp_intr_noniram_enable (*C++ function*), 1679
esp_intr_reserve (*C++ function*), 1677
esp_intr_set_in_iram (*C++ function*), 1679
ESP_IO_CAP_IN (*C macro*), 208
ESP_IO_CAP_IO (*C macro*), 208
ESP_IO_CAP_KBDISP (*C macro*), 208

ESP_IO_CAP_NONE (*C macro*), 208
ESP_IO_CAP_OUT (*C macro*), 208
esp_ip4addr_aton (*C++ function*), 814
esp_ip4addr_ntoa (*C++ function*), 814
esp_ipc_call (*C++ function*), 1671
esp_ipc_call_blocking (*C++ function*), 1671
esp_ipc_func_t (*C++ type*), 1671
esp_ipc_isr_asm_call (*C++ function*), 1672
esp_ipc_isr_asm_call_blocking (*C++ function*), 1672
esp_ipc_isr_func_t (*C++ type*), 1673
esp_ipc_isr_release_other_cpu (*C++ function*), 1673
esp_ipc_isr_stall_abort (*C++ function*), 1673
esp_ipc_isr_stall_other_cpu (*C++ function*), 1672
esp_ipc_isr_stall_pause (*C++ function*), 1673
esp_ipc_isr_stall_resume (*C++ function*), 1673
esp_lcd_color_space_t (*C++ enum*), 918
esp_lcd_color_space_t::ESP_LCD_COLOR_SPACE_BGR (*C++ enumerator*), 918
esp_lcd_color_space_t::ESP_LCD_COLOR_SPACE_MONOCHROME (*C++ enumerator*), 918
esp_lcd_color_space_t::ESP_LCD_COLOR_SPACE_RGB (*C++ enumerator*), 918
esp_lcd_del_i80_bus (*C++ function*), 920
esp_lcd_i2c_bus_handle_t (*C++ type*), 924
esp_lcd_i80_bus_config_t (*C++ struct*), 922
esp_lcd_i80_bus_config_t::bus_width (*C++ member*), 922
esp_lcd_i80_bus_config_t::clk_src (*C++ member*), 922
esp_lcd_i80_bus_config_t::data_gpio_nums (*C++ member*), 922
esp_lcd_i80_bus_config_t::dc_gpio_num (*C++ member*), 922
esp_lcd_i80_bus_config_t::max_transfer_bytes (*C++ member*), 922
esp_lcd_i80_bus_config_t::psram_trans_align (*C++ member*), 923
esp_lcd_i80_bus_config_t::sram_trans_align (*C++ member*), 923
esp_lcd_i80_bus_config_t::wr_gpio_num (*C++ member*), 922
esp_lcd_i80_bus_handle_t (*C++ type*), 924
esp_lcd_new_i80_bus (*C++ function*), 920
esp_lcd_new_panel_io_i2c (*C++ function*), 919
esp_lcd_new_panel_io_i80 (*C++ function*), 920
esp_lcd_new_panel_io_spi (*C++ function*), 919
esp_lcd_new_panel_nt35510 (*C++ function*), 927
esp_lcd_new_panel_ssd1306 (*C++ function*), 927
esp_lcd_new_panel_st7789 (*C++ function*), 927
esp_lcd_panel_del (*C++ function*), 925
esp_lcd_panel_dev_config_t (*C++ struct*), 927
esp_lcd_panel_dev_config_t::bits_per_pixel (*C++ member*), 927
esp_lcd_panel_dev_config_t::color_space (*C++ member*), 927
esp_lcd_panel_dev_config_t::flags (*C++ member*), 928
esp_lcd_panel_dev_config_t::reset_active_high (*C++ member*), 928
esp_lcd_panel_dev_config_t::reset_gpio_num (*C++ member*), 927
esp_lcd_panel_dev_config_t::vendor_config (*C++ member*), 928
esp_lcd_panel_disp_off (*C++ function*), 926
esp_lcd_panel_draw_bitmap (*C++ function*), 925
esp_lcd_panel_handle_t (*C++ type*), 917
esp_lcd_panel_init (*C++ function*), 925
esp_lcd_panel_invert_color (*C++ function*), 926
esp_lcd_panel_io_color_trans_done_cb_t (*C++ type*), 924
esp_lcd_panel_io_del (*C++ function*), 919
esp_lcd_panel_io_event_data_t (*C++ struct*), 920
esp_lcd_panel_io_handle_t (*C++ type*), 917
esp_lcd_panel_io_i2c_config_t (*C++ struct*), 921
esp_lcd_panel_io_i2c_config_t::control_phase_bytes (*C++ member*), 922
esp_lcd_panel_io_i2c_config_t::dc_bit_offset (*C++ member*), 922
esp_lcd_panel_io_i2c_config_t::dc_low_on_data (*C++ member*), 922
esp_lcd_panel_io_i2c_config_t::dev_addr (*C++ member*), 921
esp_lcd_panel_io_i2c_config_t::disable_control_phase (*C++ member*), 922
esp_lcd_panel_io_i2c_config_t::flags (*C++ member*), 922
esp_lcd_panel_io_i2c_config_t::lcd_cmd_bits (*C++ member*), 922
esp_lcd_panel_io_i2c_config_t::lcd_param_bits (*C++ member*), 922
esp_lcd_panel_io_i2c_config_t::on_color_trans_done (*C++ member*), 921
esp_lcd_panel_io_i2c_config_t::user_ctx (*C++ member*), 922
esp_lcd_panel_io_i80_config_t (*C++ struct*), 923
esp_lcd_panel_io_i80_config_t::cs_active_high (*C++ member*), 924
esp_lcd_panel_io_i80_config_t::cs_gpio_num

(C++ member), 923
esp_lcd_panel_io_i80_config_t::dc_cmd_level (C++ member), 923
esp_lcd_panel_io_i80_config_t::dc_data_level (C++ member), 923
esp_lcd_panel_io_i80_config_t::dc_dummy_level (C++ member), 923
esp_lcd_panel_io_i80_config_t::dc_idle_level (C++ member), 923
esp_lcd_panel_io_i80_config_t::dc_levels (C++ member), 923
esp_lcd_panel_io_i80_config_t::flags (C++ member), 924
esp_lcd_panel_io_i80_config_t::lcd_cmd_bits (C++ member), 923
esp_lcd_panel_io_i80_config_t::lcd_param_bits (C++ member), 923
esp_lcd_panel_io_i80_config_t::on_color_trans_done (C++ member), 923
esp_lcd_panel_io_i80_config_t::pclk_active_neg (C++ member), 924
esp_lcd_panel_io_i80_config_t::pclk_hz (C++ member), 923
esp_lcd_panel_io_i80_config_t::pclk_idle_low (C++ member), 924
esp_lcd_panel_io_i80_config_t::reverse_color_bits (C++ member), 924
esp_lcd_panel_io_i80_config_t::swap_color_bytes (C++ member), 924
esp_lcd_panel_io_i80_config_t::trans_queue_depth (C++ member), 923
esp_lcd_panel_io_i80_config_t::user_ctx (C++ member), 923
esp_lcd_panel_io_rx_param (C++ function), 918
esp_lcd_panel_io_spi_config_t (C++ struct), 920
esp_lcd_panel_io_spi_config_t::cs_gpio_num (C++ member), 920
esp_lcd_panel_io_spi_config_t::dc_as_cmd_phase (C++ member), 921
esp_lcd_panel_io_spi_config_t::dc_gpio_num (C++ member), 920
esp_lcd_panel_io_spi_config_t::dc_low_on_data (C++ member), 921
esp_lcd_panel_io_spi_config_t::flags (C++ member), 921
esp_lcd_panel_io_spi_config_t::lcd_cmd_bits (C++ member), 921
esp_lcd_panel_io_spi_config_t::lcd_param_bits (C++ member), 921
esp_lcd_panel_io_spi_config_t::lsb_first (C++ member), 921
esp_lcd_panel_io_spi_config_t::octal_mode (C++ member), 921
esp_lcd_panel_io_spi_config_t::on_color_trans_done (C++ member), 921
esp_lcd_panel_io_spi_config_t::pclk_hz (C++ member), 921
esp_lcd_panel_io_spi_config_t::spi_mode (C++ member), 921
esp_lcd_panel_io_spi_config_t::trans_queue_depth (C++ member), 921
esp_lcd_panel_io_spi_config_t::user_ctx (C++ member), 921
esp_lcd_panel_io_tx_color (C++ function), 919
esp_lcd_panel_io_tx_param (C++ function), 918
esp_lcd_panel_mirror (C++ function), 925
esp_lcd_panel_reset (C++ function), 924
esp_lcd_panel_set_gap (C++ function), 926
esp_lcd_panel_swap_xy (C++ function), 925
esp_lcd_spi_bus_handle_t (C++ type), 924
ESP_LE_AUTH_BOND (C macro), 207
ESP_LE_AUTH_NO_BOND (C macro), 207
ESP_LE_AUTH_REQ_BOND_MITM (C macro), 207
ESP_LE_AUTH_REQ_MITM (C macro), 207
ESP_LE_AUTH_REQ_SC_BOND (C macro), 207
ESP_LE_AUTH_REQ_SC_MITM (C macro), 207
ESP_LE_AUTH_REQ_SC_MITM_BOND (C macro), 208
ESP_LE_AUTH_REQ_SC_ONLY (C macro), 207
ESP_LE_KEY_LCSRK (C macro), 207
ESP_LE_KEY_LENC (C macro), 207
ESP_LE_KEY_LID (C macro), 207
ESP_LE_KEY_LLK (C macro), 207
ESP_LE_KEY_NONE (C macro), 207
ESP_LE_KEY_PCSRK (C macro), 207
ESP_LE_KEY_PENC (C macro), 207
ESP_LE_KEY_PID (C macro), 207
ESP_LE_KEY_PLK (C macro), 207
esp_light_sleep_start (C++ function), 1724
esp_link_key (C++ type), 162
esp_local_ctrl_add_property (C++ function), 1232
esp_local_ctrl_config (C++ struct), 1235
esp_local_ctrl_config::handlers (C++ member), 1236
esp_local_ctrl_config::max_properties (C++ member), 1236
esp_local_ctrl_config::proto_sec (C++ member), 1236
esp_local_ctrl_config::transport (C++ member), 1236
esp_local_ctrl_config::transport_config (C++ member), 1236
esp_local_ctrl_config_t (C++ type), 1237
esp_local_ctrl_get_property (C++ function), 1232
esp_local_ctrl_get_transport_ble (C++ function), 1232
esp_local_ctrl_get_transport_httpd (C++ function), 1232
esp_local_ctrl_handlers (C++ struct), 1234
esp_local_ctrl_handlers::get_prop_values

(C++ *member*), 1234
esp_local_ctrl_handlers::set_prop_value (C++ *member*), 1235
esp_local_ctrl_handlers::usr_ctx (C++ *member*), 1235
esp_local_ctrl_handlers::usr_ctx_free_fn (C++ *member*), 1235
esp_local_ctrl_handlers_t (C++ *type*), 1236
esp_local_ctrl_prop (C++ *struct*), 1233
esp_local_ctrl_prop::ctx (C++ *member*), 1234
esp_local_ctrl_prop::ctx_free_fn (C++ *member*), 1234
esp_local_ctrl_prop::flags (C++ *member*), 1233
esp_local_ctrl_prop::name (C++ *member*), 1233
esp_local_ctrl_prop::size (C++ *member*), 1233
esp_local_ctrl_prop::type (C++ *member*), 1233
esp_local_ctrl_prop_t (C++ *type*), 1236
esp_local_ctrl_prop_val (C++ *struct*), 1234
esp_local_ctrl_prop_val::data (C++ *member*), 1234
esp_local_ctrl_prop_val::free_fn (C++ *member*), 1234
esp_local_ctrl_prop_val::size (C++ *member*), 1234
esp_local_ctrl_prop_val_t (C++ *type*), 1236
esp_local_ctrl_proto_sec (C++ *enum*), 1237
esp_local_ctrl_proto_sec::PROTOCOM_SEC0 (C++ *enumerator*), 1237
esp_local_ctrl_proto_sec::PROTOCOM_SEC1 (C++ *enumerator*), 1237
esp_local_ctrl_proto_sec::PROTOCOM_SEC_CUSTOM (C++ *enumerator*), 1237
esp_local_ctrl_proto_sec_cfg (C++ *struct*), 1235
esp_local_ctrl_proto_sec_cfg::custom_handle (C++ *member*), 1235
esp_local_ctrl_proto_sec_cfg::pop (C++ *member*), 1235
esp_local_ctrl_proto_sec_cfg::version (C++ *member*), 1235
esp_local_ctrl_proto_sec_cfg_t (C++ *type*), 1237
esp_local_ctrl_proto_sec_t (C++ *type*), 1237
esp_local_ctrl_remove_property (C++ *function*), 1232
esp_local_ctrl_set_handler (C++ *function*), 1232
esp_local_ctrl_start (C++ *function*), 1232
esp_local_ctrl_stop (C++ *function*), 1232
ESP_LOCAL_CTRL_TRANSPORT_BLE (C *macro*), 1236
esp_local_ctrl_transport_config_ble_t (C++ *type*), 1236
esp_local_ctrl_transport_config_httpd_t (C++ *type*), 1236
esp_local_ctrl_transport_config_t (C++ *union*), 1233
esp_local_ctrl_transport_config_t::ble (C++ *member*), 1233
esp_local_ctrl_transport_config_t::httpd (C++ *member*), 1233
ESP_LOCAL_CTRL_TRANSPORT_HTTPD (C *macro*), 1236
esp_local_ctrl_transport_t (C++ *type*), 1236
ESP_LOG_BUFFER_CHAR (C *macro*), 1685
ESP_LOG_BUFFER_CHAR_LEVEL (C *macro*), 1684
ESP_LOG_BUFFER_HEX (C *macro*), 1685
ESP_LOG_BUFFER_HEX_LEVEL (C *macro*), 1684
ESP_LOG_BUFFER_HEXDUMP (C *macro*), 1685
ESP_LOG_EARLY_IMPL (C *macro*), 1686
esp_log_early_timestamp (C++ *function*), 1684
ESP_LOG_LEVEL (C *macro*), 1686
esp_log_level_get (C++ *function*), 1683
ESP_LOG_LEVEL_LOCAL (C *macro*), 1687
esp_log_level_set (C++ *function*), 1683
esp_log_level_t (C++ *enum*), 1688
esp_log_level_t::ESP_LOG_DEBUG (C++ *enumerator*), 1688
esp_log_level_t::ESP_LOG_ERROR (C++ *enumerator*), 1688
esp_log_level_t::ESP_LOG_INFO (C++ *enumerator*), 1688
esp_log_level_t::ESP_LOG_NONE (C++ *enumerator*), 1688
esp_log_level_t::ESP_LOG_VERBOSE (C++ *enumerator*), 1688
esp_log_level_t::ESP_LOG_WARN (C++ *enumerator*), 1688
esp_log_set_vprintf (C++ *function*), 1683
esp_log_system_timestamp (C++ *function*), 1684
esp_log_timestamp (C++ *function*), 1683
esp_log_write (C++ *function*), 1684
esp_log_writev (C++ *function*), 1684
ESP_LOGD (C *macro*), 1686
ESP_LOGE (C *macro*), 1686
ESP_LOGI (C *macro*), 1686
ESP_LOGV (C *macro*), 1686
ESP_LOGW (C *macro*), 1686
esp_mesh_allow_root_conflicts (C++ *function*), 743
esp_mesh_available_txupQ_num (C++ *function*), 742
esp_mesh_connect (C++ *function*), 746
esp_mesh_deinit (C++ *function*), 733
esp_mesh_delete_group_id (C++ *function*), 743
esp_mesh_disable_ps (C++ *function*), 748

esp_mesh_disconnect (*C++ function*), 746
esp_mesh_enable_ps (*C++ function*), 747
esp_mesh_fix_root (*C++ function*), 744
esp_mesh_flush_scan_result (*C++ function*), 746
esp_mesh_flush_upstream_packets (*C++ function*), 746
esp_mesh_get_active_duty_cycle (*C++ function*), 748
esp_mesh_get_ap_assoc_expire (*C++ function*), 741
esp_mesh_get_ap_authmode (*C++ function*), 739
esp_mesh_get_ap_connections (*C++ function*), 739
esp_mesh_get_capacity_num (*C++ function*), 744
esp_mesh_get_config (*C++ function*), 737
esp_mesh_get_group_list (*C++ function*), 743
esp_mesh_get_group_num (*C++ function*), 743
esp_mesh_get_id (*C++ function*), 737
esp_mesh_get_ie_crypto_key (*C++ function*), 744
esp_mesh_get_layer (*C++ function*), 739
esp_mesh_get_max_layer (*C++ function*), 738
esp_mesh_get_network_duty_cycle (*C++ function*), 749
esp_mesh_get_non_mesh_connections (*C++ function*), 739
esp_mesh_get_parent_bssid (*C++ function*), 739
esp_mesh_get_root_healing_delay (*C++ function*), 744
esp_mesh_get_router (*C++ function*), 737
esp_mesh_get_router_bssid (*C++ function*), 747
esp_mesh_get_routing_table (*C++ function*), 741
esp_mesh_get_routing_table_size (*C++ function*), 741
esp_mesh_get_running_active_duty_cycle (*C++ function*), 749
esp_mesh_get_rx_pending (*C++ function*), 742
esp_mesh_get_self_organized (*C++ function*), 740
esp_mesh_get_subnet_nodes_list (*C++ function*), 746
esp_mesh_get_subnet_nodes_num (*C++ function*), 746
esp_mesh_get_topology (*C++ function*), 747
esp_mesh_get_total_node_num (*C++ function*), 741
esp_mesh_get_tsf_time (*C++ function*), 747
esp_mesh_get_tx_pending (*C++ function*), 742
esp_mesh_get_type (*C++ function*), 738
esp_mesh_get_vote_percentage (*C++ function*), 741
esp_mesh_get_xon_qsize (*C++ function*), 742
esp_mesh_init (*C++ function*), 733
esp_mesh_is_device_active (*C++ function*), 748
esp_mesh_is_my_group (*C++ function*), 743
esp_mesh_is_ps_enabled (*C++ function*), 748
esp_mesh_is_root (*C++ function*), 740
esp_mesh_is_root_conflicts_allowed (*C++ function*), 743
esp_mesh_is_root_fixed (*C++ function*), 745
esp_mesh_post_toDS_state (*C++ function*), 742
esp_mesh_ps_duty_signaling (*C++ function*), 750
esp_mesh_recv (*C++ function*), 735
esp_mesh_recv_toDS (*C++ function*), 735
esp_mesh_scan_get_ap_ie_len (*C++ function*), 745
esp_mesh_scan_get_ap_record (*C++ function*), 745
esp_mesh_send (*C++ function*), 734
esp_mesh_send_block_time (*C++ function*), 735
esp_mesh_set_active_duty_cycle (*C++ function*), 748
esp_mesh_set_ap_assoc_expire (*C++ function*), 741
esp_mesh_set_ap_authmode (*C++ function*), 738
esp_mesh_set_ap_connections (*C++ function*), 739
esp_mesh_set_ap_password (*C++ function*), 738
esp_mesh_set_capacity_num (*C++ function*), 743
esp_mesh_set_config (*C++ function*), 736
esp_mesh_set_group_id (*C++ function*), 743
esp_mesh_set_id (*C++ function*), 737
esp_mesh_set_ie_crypto_funcs (*C++ function*), 744
esp_mesh_set_ie_crypto_key (*C++ function*), 744
esp_mesh_set_max_layer (*C++ function*), 738
esp_mesh_set_network_duty_cycle (*C++ function*), 749
esp_mesh_set_parent (*C++ function*), 745
esp_mesh_set_root_healing_delay (*C++ function*), 744
esp_mesh_set_router (*C++ function*), 737
esp_mesh_set_self_organized (*C++ function*), 740
esp_mesh_set_topology (*C++ function*), 747
esp_mesh_set_type (*C++ function*), 737
esp_mesh_set_vote_percentage (*C++ function*), 741
esp_mesh_set_xon_qsize (*C++ function*), 742
esp_mesh_start (*C++ function*), 733
esp_mesh_stop (*C++ function*), 733
esp_mesh_switch_channel (*C++ function*), 746

esp_mesh_topology_t (*C++ enum*), 766
esp_mesh_topology_t::MESH_TOPO_CHAIN (*C++ enumerator*), 766
esp_mesh_topology_t::MESH_TOPO_TREE (*C++ enumerator*), 766
esp_mesh_waive_root (*C++ function*), 740
esp_mqtt_client_config_t (*C++ struct*), 1133
esp_mqtt_client_config_t::alpn_protos (*C++ member*), 1135
esp_mqtt_client_config_t::buffer_size (*C++ member*), 1134
esp_mqtt_client_config_t::cert_len (*C++ member*), 1134
esp_mqtt_client_config_t::cert_pem (*C++ member*), 1134
esp_mqtt_client_config_t::client_cert_len (*C++ member*), 1134
esp_mqtt_client_config_t::client_cert_pem (*C++ member*), 1134
esp_mqtt_client_config_t::client_id (*C++ member*), 1133
esp_mqtt_client_config_t::client_key_len (*C++ member*), 1134
esp_mqtt_client_config_t::client_key_pem (*C++ member*), 1134
esp_mqtt_client_config_t::clientkey_password (*C++ member*), 1135
esp_mqtt_client_config_t::clientkey_password_len (*C++ member*), 1135
esp_mqtt_client_config_t::crt_bundle_attach (*C++ member*), 1135
esp_mqtt_client_config_t::disable_auto_reconnect (*C++ member*), 1134
esp_mqtt_client_config_t::disable_clean_session (*C++ member*), 1134
esp_mqtt_client_config_t::disable_keepalive (*C++ member*), 1136
esp_mqtt_client_config_t::ds_data (*C++ member*), 1135
esp_mqtt_client_config_t::event_handle (*C++ member*), 1133
esp_mqtt_client_config_t::event_loop_handle (*C++ member*), 1133
esp_mqtt_client_config_t::host (*C++ member*), 1133
esp_mqtt_client_config_t::keepalive (*C++ member*), 1134
esp_mqtt_client_config_t::lwt_msg (*C++ member*), 1133
esp_mqtt_client_config_t::lwt_msg_len (*C++ member*), 1133
esp_mqtt_client_config_t::lwt_qos (*C++ member*), 1133
esp_mqtt_client_config_t::lwt_retain (*C++ member*), 1133
esp_mqtt_client_config_t::lwt_topic (*C++ member*), 1133
esp_mqtt_client_config_t::message_retransmit_timeout (*C++ member*), 1136
esp_mqtt_client_config_t::network_timeout_ms (*C++ member*), 1135
esp_mqtt_client_config_t::out_buffer_size (*C++ member*), 1135
esp_mqtt_client_config_t::password (*C++ member*), 1133
esp_mqtt_client_config_t::path (*C++ member*), 1136
esp_mqtt_client_config_t::port (*C++ member*), 1133
esp_mqtt_client_config_t::protocol_ver (*C++ member*), 1135
esp_mqtt_client_config_t::psk_hint_key (*C++ member*), 1135
esp_mqtt_client_config_t::reconnect_timeout_ms (*C++ member*), 1135
esp_mqtt_client_config_t::refresh_connection_after_ms (*C++ member*), 1135
esp_mqtt_client_config_t::set_null_client_id (*C++ member*), 1133
esp_mqtt_client_config_t::skip_cert_common_name_check (*C++ member*), 1135
esp_mqtt_client_config_t::task_prio (*C++ member*), 1134
esp_mqtt_client_config_t::task_stack (*C++ member*), 1134
esp_mqtt_client_config_t::transport (*C++ member*), 1135
esp_mqtt_client_config_t::uri (*C++ member*), 1133
esp_mqtt_client_config_t::use_global_ca_store (*C++ member*), 1135
esp_mqtt_client_config_t::use_secure_element (*C++ member*), 1135
esp_mqtt_client_config_t::user_context (*C++ member*), 1134
esp_mqtt_client_config_t::username (*C++ member*), 1133
esp_mqtt_client_destroy (*C++ function*), 1130
esp_mqtt_client_disconnect (*C++ function*), 1129
esp_mqtt_client_enqueue (*C++ function*), 1130
esp_mqtt_client_get_outbox_size (*C++ function*), 1131
esp_mqtt_client_handle_t (*C++ type*), 1136
esp_mqtt_client_init (*C++ function*), 1128
esp_mqtt_client_publish (*C++ function*), 1129
esp_mqtt_client_reconnect (*C++ function*), 1129
esp_mqtt_client_register_event (*C++ function*), 1130
esp_mqtt_client_set_uri (*C++ function*), 1128
esp_mqtt_client_start (*C++ function*), 1129

esp_mqtt_client_stop (C++ function), 1129
esp_mqtt_client_subscribe (C++ function), 1129
esp_mqtt_client_unsubscribe (C++ function), 1129
esp_mqtt_connect_return_code_t (C++ enum), 1137
esp_mqtt_connect_return_code_t::MQTT_CONNECTION_ACCEPTED (C++ enumerator), 1138
esp_mqtt_connect_return_code_t::MQTT_CONNECTION_REFUSE_BAD_USERNAME (C++ enumerator), 1138
esp_mqtt_connect_return_code_t::MQTT_CONNECTION_REFUSE_ID_REJECTED (C++ enumerator), 1138
esp_mqtt_connect_return_code_t::MQTT_CONNECTION_REFUSE_NOT_AUTHORIZED (C++ enumerator), 1138
esp_mqtt_connect_return_code_t::MQTT_CONNECTION_REFUSE_PROTOCOL (C++ enumerator), 1138
esp_mqtt_connect_return_code_t::MQTT_CONNECTION_REFUSE_SERVER_UNAVAILABLE (C++ enumerator), 1138
esp_mqtt_error_codes (C++ struct), 1131
esp_mqtt_error_codes::connect_return_code (C++ member), 1131
esp_mqtt_error_codes::error_type (C++ member), 1131
esp_mqtt_error_codes::esp_tls_cert_verify_flags (C++ member), 1131
esp_mqtt_error_codes::esp_tls_last_esp_err (C++ member), 1131
esp_mqtt_error_codes::esp_tls_stack_err (C++ member), 1131
esp_mqtt_error_codes::esp_transport_sock_errno (C++ member), 1131
esp_mqtt_error_codes_t (C++ type), 1136
esp_mqtt_error_type_t (C++ enum), 1138
esp_mqtt_error_type_t::MQTT_ERROR_TYPE_CONNECTION_REFUSED (C++ enumerator), 1138
esp_mqtt_error_type_t::MQTT_ERROR_TYPE_NONE (C++ enumerator), 1138
esp_mqtt_error_type_t::MQTT_ERROR_TYPE_TCP_TRANSPORT (C++ enumerator), 1138
esp_mqtt_event_handle_t (C++ type), 1136
esp_mqtt_event_id_t (C++ enum), 1136
esp_mqtt_event_id_t::MQTT_EVENT_ANY (C++ enumerator), 1137
esp_mqtt_event_id_t::MQTT_EVENT_BEFORE_CONNECT (C++ enumerator), 1137
esp_mqtt_event_id_t::MQTT_EVENT_CONNECTED (C++ enumerator), 1137
esp_mqtt_event_id_t::MQTT_EVENT_DATA (C++ enumerator), 1137
esp_mqtt_event_id_t::MQTT_EVENT_DELETED (C++ enumerator), 1137
esp_mqtt_event_id_t::MQTT_EVENT_DISCONNECTED (C++ enumerator), 1137
esp_mqtt_event_id_t::MQTT_EVENT_ERROR (C++ enumerator), 1137
esp_mqtt_event_id_t::MQTT_EVENT_PUBLISHED (C++ enumerator), 1137
esp_mqtt_event_id_t::MQTT_EVENT_SUBSCRIBED (C++ enumerator), 1137
esp_mqtt_event_id_t::MQTT_EVENT_UNSUBSCRIBED (C++ enumerator), 1137
esp_mqtt_event_t (C++ struct), 1131
esp_mqtt_event_t::client (C++ member), 1132
esp_mqtt_event_t::current_data_offset (C++ member), 1132
esp_mqtt_event_t::data (C++ member), 1132
esp_mqtt_event_t::data_len (C++ member), 1132
esp_mqtt_event_t::dup (C++ member), 1132
esp_mqtt_event_t::error_handle (C++ member), 1132
esp_mqtt_event_t::event_id (C++ member), 1132
esp_mqtt_event_t::msg_id (C++ member), 1132
esp_mqtt_event_t::qos (C++ member), 1132
esp_mqtt_event_t::retain (C++ member), 1132
esp_mqtt_event_t::session_present (C++ member), 1132
esp_mqtt_event_t::topic (C++ member), 1132
esp_mqtt_event_t::topic_len (C++ member), 1132
esp_mqtt_event_t::total_data_len (C++ member), 1132
esp_mqtt_event_t::user_context (C++ member), 1132
esp_mqtt_protocol_ver_t (C++ enum), 1138
esp_mqtt_protocol_ver_t::MQTT_PROTOCOL_UNDEFINED (C++ enumerator), 1139
esp_mqtt_protocol_ver_t::MQTT_PROTOCOL_V_3_1 (C++ enumerator), 1139
esp_mqtt_protocol_ver_t::MQTT_PROTOCOL_V_3_1_1 (C++ enumerator), 1139
esp_mqtt_set_config (C++ function), 1130
esp_mqtt_transport_t (C++ enum), 1138
esp_mqtt_transport_t::MQTT_TRANSPORT_OVER_SSL (C++ enumerator), 1138
esp_mqtt_transport_t::MQTT_TRANSPORT_OVER_TCP (C++ enumerator), 1138
esp_mqtt_transport_t::MQTT_TRANSPORT_OVER_WS (C++ enumerator), 1138
esp_mqtt_transport_t::MQTT_TRANSPORT_OVER_WSS (C++ enumerator), 1138
esp_mqtt_transport_t::MQTT_TRANSPORT_UNKNOWN (C++ enumerator), 1138
esp_netif_action_add_ip6_address (C++ function), 807
esp_netif_action_connected (C++ function), 806
esp_netif_action_disconnected (C++ function), 806
esp_netif_action_got_ip (C++ function), 807

esp_netif_action_join_ip6_multicast_group (C++ function), 807
esp_netif_action_leave_ip6_multicast_group (C++ function), 807
esp_netif_action_remove_ip6_address (C++ function), 808
esp_netif_action_start (C++ function), 806
esp_netif_action_stop (C++ function), 806
esp_netif_attach (C++ function), 805
esp_netif_attach_wifi_ap (C++ function), 816
esp_netif_attach_wifi_station (C++ function), 816
esp_netif_create_default_wifi_ap (C++ function), 816
esp_netif_create_default_wifi_mesh_netifs (C++ function), 817
esp_netif_create_default_wifi_sta (C++ function), 816
esp_netif_create_ip6_linklocal (C++ function), 813
esp_netif_create_wifi (C++ function), 817
esp_netif_deinit (C++ function), 805
esp_netif_destroy (C++ function), 805
esp_netif_destroy_default_wifi (C++ function), 816
esp_netif_dhcpc_get_status (C++ function), 812
esp_netif_dhcpc_option (C++ function), 811
esp_netif_dhcpc_start (C++ function), 811
esp_netif_dhcpc_stop (C++ function), 811
esp_netif_dhcps_get_status (C++ function), 812
esp_netif_dhcps_option (C++ function), 810
esp_netif_dhcps_start (C++ function), 812
esp_netif_dhcps_stop (C++ function), 812
esp_netif_free_rx_buffer (C++ function), 820
esp_netif_get_all_ip6 (C++ function), 813
esp_netif_get_desc (C++ function), 815
esp_netif_get_dns_info (C++ function), 813
esp_netif_get_event_id (C++ function), 815
esp_netif_get_flags (C++ function), 815
esp_netif_get_handle_from_ifkey (C++ function), 814
esp_netif_get_handle_from_netif_impl (C++ function), 820
esp_netif_get_hostname (C++ function), 808
esp_netif_get_ifkey (C++ function), 815
esp_netif_get_io_driver (C++ function), 814
esp_netif_get_ip6_global (C++ function), 813
esp_netif_get_ip6_linklocal (C++ function), 813
esp_netif_get_ip_info (C++ function), 809
esp_netif_get_mac (C++ function), 808
esp_netif_get_netif_impl (C++ function), 820
esp_netif_get_netif_impl_index (C++ function), 810
esp_netif_get_netif_impl_name (C++ function), 810
esp_netif_get_nr_of_ifs (C++ function), 815
esp_netif_get_old_ip_info (C++ function), 809
esp_netif_get_route_prio (C++ function), 815
esp_netif_init (C++ function), 805
esp_netif_is_netif_up (C++ function), 809
esp_netif_netstack_buf_free (C++ function), 815
esp_netif_netstack_buf_ref (C++ function), 815
esp_netif_new (C++ function), 805
esp_netif_next (C++ function), 815
esp_netif_receive (C++ function), 806
esp_netif_set_dns_info (C++ function), 812
esp_netif_set_driver_config (C++ function), 805
esp_netif_set_hostname (C++ function), 808
esp_netif_set_ip4_addr (C++ function), 814
esp_netif_set_ip_info (C++ function), 809
esp_netif_set_mac (C++ function), 808
esp_netif_set_old_ip_info (C++ function), 810
esp_netif_str_to_ip4 (C++ function), 814
esp_netif_str_to_ip6 (C++ function), 814
esp_netif_transmit (C++ function), 820
esp_netif_transmit_wrap (C++ function), 820
esp_nimble_hci_and_controller_deinit (C++ function), 382
esp_nimble_hci_and_controller_init (C++ function), 382
esp_nimble_hci_deinit (C++ function), 382
esp_nimble_hci_init (C++ function), 382
esp_now_add_peer (C++ function), 723
esp_now_deinit (C++ function), 721
esp_now_del_peer (C++ function), 723
ESP_NOW_ETH_ALEN (C macro), 726
esp_now_fetch_peer (C++ function), 724
esp_now_get_peer (C++ function), 723
esp_now_get_peer_num (C++ function), 724
esp_now_get_version (C++ function), 722
esp_now_init (C++ function), 721
esp_now_is_peer_exist (C++ function), 724
ESP_NOW_KEY_LEN (C macro), 726
ESP_NOW_MAX_DATA_LEN (C macro), 726
ESP_NOW_MAX_ENCRYPT_PEER_NUM (C macro), 726
ESP_NOW_MAX_TOTAL_PEER_NUM (C macro), 726
esp_now_mod_peer (C++ function), 723
esp_now_peer_info (C++ struct), 725
esp_now_peer_info::channel (C++ member), 725
esp_now_peer_info::encrypt (C++ member), 725

esp_now_peer_info::ifidx (C++ member), 725
esp_now_peer_info::lmk (C++ member), 725
esp_now_peer_info::peer_addr (C++ member), 725
esp_now_peer_info::priv (C++ member), 725
esp_now_peer_info_t (C++ type), 726
esp_now_peer_num (C++ struct), 725
esp_now_peer_num::encrypt_num (C++ member), 725
esp_now_peer_num::total_num (C++ member), 725
esp_now_peer_num_t (C++ type), 726
esp_now_recv_cb_t (C++ type), 726
esp_now_register_recv_cb (C++ function), 722
esp_now_register_send_cb (C++ function), 722
esp_now_send (C++ function), 722
esp_now_send_cb_t (C++ type), 726
esp_now_send_status_t (C++ enum), 727
esp_now_send_status_t::ESP_NOW_SEND_FAIL (C++ enumerator), 727
esp_now_send_status_t::ESP_NOW_SEND_SUCCESS (C++ enumerator), 727
esp_now_set_pmk (C++ function), 724
esp_now_set_wake_window (C++ function), 724
esp_now_unregister_recv_cb (C++ function), 722
esp_now_unregister_send_cb (C++ function), 722
ESP_OK (C macro), 1477
ESP_OK_EFUSE_CNT (C macro), 1476
esp_openthread_border_router_deinit (C++ function), 802
esp_openthread_border_router_init (C++ function), 802
esp_openthread_deinit (C++ function), 797
esp_openthread_event_t (C++ enum), 800
esp_openthread_event_t::OPENTHREAD_EVENT_GOT_IP6 (C++ enumerator), 800
esp_openthread_event_t::OPENTHREAD_EVENT_IF_DOWN (C++ enumerator), 800
esp_openthread_event_t::OPENTHREAD_EVENT_IF_UP (C++ enumerator), 800
esp_openthread_event_t::OPENTHREAD_EVENT_LOST_IP6 (C++ enumerator), 800
esp_openthread_event_t::OPENTHREAD_EVENT_MULTICAST_GROUP_JOIN (C++ enumerator), 800
esp_openthread_event_t::OPENTHREAD_EVENT_MULTICAST_GROUP_LEAVE (C++ enumerator), 800
esp_openthread_event_t::OPENTHREAD_EVENT_START (C++ enumerator), 800
esp_openthread_event_t::OPENTHREAD_EVENT_STOP (C++ enumerator), 800
esp_openthread_get_backbone_netif (C++ function), 802
esp_openthread_get_instance (C++ function), 797
esp_openthread_get_netif (C++ function), 801
esp_openthread_host_connection_config_t (C++ struct), 799
esp_openthread_host_connection_config_t::host_con (C++ member), 799
esp_openthread_host_connection_config_t::host_uar (C++ member), 799
esp_openthread_host_connection_mode_t (C++ enum), 800
esp_openthread_host_connection_mode_t::HOST_CONNE (C++ enumerator), 800
esp_openthread_host_connection_mode_t::HOST_CONNE (C++ enumerator), 800
esp_openthread_host_connection_mode_t::HOST_CONNE (C++ enumerator), 801
esp_openthread_init (C++ function), 797
esp_openthread_launch_mainloop (C++ function), 797
esp_openthread_lock_acquire (C++ function), 801
esp_openthread_lock_deinit (C++ function), 801
esp_openthread_lock_init (C++ function), 801
esp_openthread_lock_release (C++ function), 801
esp_openthread_mainloop_context_t (C++ struct), 798
esp_openthread_mainloop_context_t::error_fds (C++ member), 798
esp_openthread_mainloop_context_t::max_fd (C++ member), 798
esp_openthread_mainloop_context_t::read_fds (C++ member), 798
esp_openthread_mainloop_context_t::timeout (C++ member), 798
esp_openthread_mainloop_context_t::write_fds (C++ member), 798
esp_openthread_netif_glue_deinit (C++ function), 801
esp_openthread_netif_glue_init (C++ function), 801
esp_openthread_platform_config_t (C++ struct), 799
esp_openthread_platform_config_t::host_config (C++ member), 799
esp_openthread_platform_config_t::port_config (C++ member), 799
esp_openthread_platform_config_t::radio_config (C++ member), 799
esp_openthread_port_config_t (C++ struct), 799
esp_openthread_port_config_t::netif_queue_size (C++ member), 799
esp_openthread_port_config_t::storage_partition_n (C++ member), 799

esp_openthread_port_config_t::task_queue_size (C++ member), 799
esp_openthread_radio_config_t (C++ struct), 798
esp_openthread_radio_config_t::radio_mode (C++ member), 799
esp_openthread_radio_config_t::radio_uart_config (C++ member), 799
esp_openthread_radio_mode_t (C++ enum), 800
esp_openthread_radio_mode_t::RADIO_MODE_NATIVE (C++ enumerator), 800
esp_openthread_radio_mode_t::RADIO_MODE_SPI_RCP (C++ enumerator), 800
esp_openthread_radio_mode_t::RADIO_MODE_UART_RCP (C++ enumerator), 800
esp_openthread_uart_config_t (C++ struct), 798
esp_openthread_uart_config_t::port (C++ member), 798
esp_openthread_uart_config_t::rx_pin (C++ member), 798
esp_openthread_uart_config_t::tx_pin (C++ member), 798
esp_openthread_uart_config_t::uart_config (C++ member), 798
esp_ota_abort (C++ function), 1701
esp_ota_begin (C++ function), 1699
esp_ota_check_rollback_is_possible (C++ function), 1703
esp_ota_end (C++ function), 1701
esp_ota_erase_last_boot_app_partition (C++ function), 1703
esp_ota_get_app_description (C++ function), 1699
esp_ota_get_app_elf_sha256 (C++ function), 1699
esp_ota_get_app_partition_count (C++ function), 1702
esp_ota_get_boot_partition (C++ function), 1701
esp_ota_get_last_invalid_partition (C++ function), 1703
esp_ota_get_next_update_partition (C++ function), 1702
esp_ota_get_partition_description (C++ function), 1702
esp_ota_get_running_partition (C++ function), 1702
esp_ota_get_state_partition (C++ function), 1703
esp_ota_handle_t (C++ type), 1704
esp_ota_mark_app_invalid_rollback_and_reboot (C++ function), 1702
esp_ota_mark_app_valid_cancel_rollback (C++ function), 1702
esp_ota_set_boot_partition (C++ function), 1701
esp_ota_write (C++ function), 1700
esp_ota_write_with_offset (C++ function), 1700
esp_partition_check_identity (C++ function), 1410
esp_partition_deregister_external (C++ function), 1411
esp_partition_erase_range (C++ function), 1410
esp_partition_find (C++ function), 1407
esp_partition_find_first (C++ function), 1407
esp_partition_get (C++ function), 1407
esp_partition_get_sha256 (C++ function), 1410
esp_partition_iterator_release (C++ function), 1408
esp_partition_iterator_t (C++ type), 1412
esp_partition_mmap (C++ function), 1410
esp_partition_next (C++ function), 1408
esp_partition_read (C++ function), 1408
esp_partition_read_raw (C++ function), 1409
esp_partition_register_external (C++ function), 1411
ESP_PARTITION_SUBTYPE_OTA (C macro), 1412
esp_partition_subtype_t (C++ enum), 1413
esp_partition_subtype_t::ESP_PARTITION_SUBTYPE_AN (C++ enumerator), 1415
esp_partition_subtype_t::ESP_PARTITION_SUBTYPE_AP (C++ enumerator), 1413
esp_partition_subtype_t::ESP_PARTITION_SUBTYPE_AP (C++ enumerator), 1413
esp_partition_subtype_t::ESP_PARTITION_SUBTYPE_AP (C++ enumerator), 1413
esp_partition_subtype_t::ESP_PARTITION_SUBTYPE_AP (C++ enumerator), 1413
esp_partition_subtype_t::ESP_PARTITION_SUBTYPE_AP (C++ enumerator), 1414
esp_partition_subtype_t::ESP_PARTITION_SUBTYPE_AP (C++ enumerator), 1414
esp_partition_subtype_t::ESP_PARTITION_SUBTYPE_AP (C++ enumerator), 1414
esp_partition_subtype_t::ESP_PARTITION_SUBTYPE_AP (C++ enumerator), 1414
esp_partition_subtype_t::ESP_PARTITION_SUBTYPE_AP (C++ enumerator), 1414
esp_partition_subtype_t::ESP_PARTITION_SUBTYPE_AP (C++ enumerator), 1413
esp_partition_subtype_t::ESP_PARTITION_SUBTYPE_AP (C++ enumerator), 1413
esp_partition_subtype_t::ESP_PARTITION_SUBTYPE_AP (C++ enumerator), 1413
esp_partition_subtype_t::ESP_PARTITION_SUBTYPE_AP (C++ enumerator), 1413
esp_partition_subtype_t::ESP_PARTITION_SUBTYPE_AP (C++ enumerator), 1413
esp_partition_subtype_t::ESP_PARTITION_SUBTYPE_AP (C++ enumerator), 1413

esp_partition_subtype_t::ESP_PARTITION_SUBTYPE_APP_OTA_8 (C++ enumerator), 1413
esp_partition_subtype_t::ESP_PARTITION_SUBTYPE_APP_OTA_9 (C++ enumerator), 1413
esp_partition_subtype_t::ESP_PARTITION_SUBTYPE_APP_OTA_MAX (C++ enumerator), 1414
esp_partition_subtype_t::ESP_PARTITION_SUBTYPE_APP_OTA_MIN (C++ enumerator), 1413
esp_partition_subtype_t::ESP_PARTITION_SUBTYPE_APP_TEST (C++ enumerator), 1414
esp_partition_subtype_t::ESP_PARTITION_SUBTYPE_DATA_COREDUMP (C++ enumerator), 1414
esp_partition_subtype_t::ESP_PARTITION_SUBTYPE_DATA_ESPHTTPD (C++ enumerator), 1414
esp_partition_subtype_t::ESP_PARTITION_SUBTYPE_DATA_FAT (C++ enumerator), 1414
esp_partition_subtype_t::ESP_PARTITION_SUBTYPE_DATA_NVS (C++ enumerator), 1414
esp_partition_subtype_t::ESP_PARTITION_SUBTYPE_DATA_OTA (C++ enumerator), 1414
esp_partition_subtype_t::ESP_PARTITION_SUBTYPE_DATA_PHY (C++ enumerator), 1414
esp_partition_subtype_t::ESP_PARTITION_SUBTYPE_DATA_SPIFFS (C++ enumerator), 1415
esp_partition_subtype_t::ESP_PARTITION_SUBTYPE_DATA_UNDEFINED (C++ enumerator), 1414
esp_partition_t (C++ struct), 1411
esp_partition_t::address (C++ member), 1412
esp_partition_t::encrypted (C++ member), 1412
esp_partition_t::flash_chip (C++ member), 1412
esp_partition_t::label (C++ member), 1412
esp_partition_t::size (C++ member), 1412
esp_partition_t::subtype (C++ member), 1412
esp_partition_t::type (C++ member), 1412
esp_partition_type_t (C++ enum), 1412
esp_partition_type_t::ESP_PARTITION_TYPE_ANY (C++ enumerator), 1412
esp_partition_type_t::ESP_PARTITION_TYPE_APP (C++ enumerator), 1412
esp_partition_type_t::ESP_PARTITION_TYPE_DATA (C++ enumerator), 1412
esp_partition_verify (C++ function), 1408
esp_partition_write (C++ function), 1408
esp_partition_write_raw (C++ function), 1409
esp_ping_callbacks_t (C++ struct), 1226
esp_ping_callbacks_t::cb_args (C++ member), 1226
esp_ping_callbacks_t::on_ping_end (C++ member), 1226
esp_ping_callbacks_t::on_ping_success (C++ member), 1226
esp_ping_callbacks_t::on_ping_timeout (C++ member), 1226
esp_ping_config_t (C++ struct), 1226
esp_ping_config_t::count (C++ member), 1227
esp_ping_config_t::data_size (C++ member), 1227
esp_ping_config_t::interface (C++ member), 1227
esp_ping_config_t::interval_ms (C++ member), 1227
esp_ping_config_t::target_addr (C++ member), 1227
esp_ping_config_t::task_prio (C++ member), 1227
esp_ping_config_t::task_stack_size (C++ member), 1227
esp_ping_config_t::timeout_ms (C++ member), 1227
esp_ping_config_t::tos (C++ member), 1227
esp_ping_config_t::ttl (C++ member), 1227
ESP_PING_COUNT_INFINITE (C macro), 1227
ESP_PING_DEFAULT_CONFIG (C macro), 1227
esp_ping_delete_session (C++ function), 1225
esp_ping_get_profile (C++ function), 1226
esp_ping_new_session (C++ function), 1225
esp_ping_profile_t (C++ enum), 1227
esp_ping_profile_t::ESP_PING_PROF_DURATION (C++ enumerator), 1228
esp_ping_profile_t::ESP_PING_PROF_IPADDR (C++ enumerator), 1228
esp_ping_profile_t::ESP_PING_PROF_REPLY (C++ enumerator), 1228
esp_ping_profile_t::ESP_PING_PROF_REQUEST (C++ enumerator), 1228
esp_ping_profile_t::ESP_PING_PROF_SEQNO (C++ enumerator), 1227
esp_ping_profile_t::ESP_PING_PROF_SIZE (C++ enumerator), 1228
esp_ping_profile_t::ESP_PING_PROF_TIMEGAP (C++ enumerator), 1228
esp_ping_profile_t::ESP_PING_PROF_TOS (C++ enumerator), 1228
esp_ping_profile_t::ESP_PING_PROF_TTL (C++ enumerator), 1228
esp_ping_start (C++ function), 1226
esp_ping_stop (C++ function), 1226
esp_pm_config_esp32_t (C++ struct), 1713
esp_pm_config_esp32_t::light_sleep_enable (C++ member), 1714
esp_pm_config_esp32_t::max_freq_mhz (C++ member), 1713
esp_pm_config_esp32_t::min_freq_mhz (C++ member), 1713

esp_pm_configure (C++ function), 1711
esp_pm_dump_locks (C++ function), 1713
esp_pm_get_configuration (C++ function), 1711
esp_pm_lock_acquire (C++ function), 1712
esp_pm_lock_create (C++ function), 1711
esp_pm_lock_delete (C++ function), 1712
esp_pm_lock_handle_t (C++ type), 1713
esp_pm_lock_release (C++ function), 1712
esp_pm_lock_type_t (C++ enum), 1713
esp_pm_lock_type_t::ESP_PM_APB_FREQ_MAX (C++ enumerator), 1713
esp_pm_lock_type_t::ESP_PM_CPU_FREQ_MAX (C++ enumerator), 1713
esp_pm_lock_type_t::ESP_PM_NO_LIGHT_SLEEP (C++ enumerator), 1713
esp_power_level_t (C++ enum), 159
esp_power_level_t::ESP_PWR_LVL_N0 (C++ enumerator), 159
esp_power_level_t::ESP_PWR_LVL_N11 (C++ enumerator), 159
esp_power_level_t::ESP_PWR_LVL_N12 (C++ enumerator), 159
esp_power_level_t::ESP_PWR_LVL_N14 (C++ enumerator), 159
esp_power_level_t::ESP_PWR_LVL_N2 (C++ enumerator), 160
esp_power_level_t::ESP_PWR_LVL_N3 (C++ enumerator), 159
esp_power_level_t::ESP_PWR_LVL_N5 (C++ enumerator), 160
esp_power_level_t::ESP_PWR_LVL_N6 (C++ enumerator), 159
esp_power_level_t::ESP_PWR_LVL_N8 (C++ enumerator), 159
esp_power_level_t::ESP_PWR_LVL_N9 (C++ enumerator), 159
esp_power_level_t::ESP_PWR_LVL_P1 (C++ enumerator), 160
esp_power_level_t::ESP_PWR_LVL_P3 (C++ enumerator), 159
esp_power_level_t::ESP_PWR_LVL_P4 (C++ enumerator), 160
esp_power_level_t::ESP_PWR_LVL_P6 (C++ enumerator), 159
esp_power_level_t::ESP_PWR_LVL_P7 (C++ enumerator), 160
esp_power_level_t::ESP_PWR_LVL_P9 (C++ enumerator), 159
esp_pthread_cfg_t (C++ struct), 1487
esp_pthread_cfg_t::inherit_cfg (C++ member), 1487
esp_pthread_cfg_t::pin_to_core (C++ member), 1487
esp_pthread_cfg_t::prio (C++ member), 1487
esp_pthread_cfg_t::stack_size (C++ member), 1487
esp_pthread_cfg_t::thread_name (C++ member), 1487
esp_pthread_get_cfg (C++ function), 1486
esp_pthread_get_default_config (C++ function), 1486
esp_pthread_init (C++ function), 1487
esp_pthread_set_cfg (C++ function), 1486
esp_random (C++ function), 1715
esp_register_freertos_idle_hook (C++ function), 1636
esp_register_freertos_idle_hook_for_cpu (C++ function), 1635
esp_register_freertos_tick_hook (C++ function), 1636
esp_register_freertos_tick_hook_for_cpu (C++ function), 1636
esp_register_shutdown_handler (C++ function), 1691
esp_reset_reason (C++ function), 1691
esp_reset_reason_t (C++ enum), 1692
esp_reset_reason_t::ESP_RST_BROWNOUT (C++ enumerator), 1693
esp_reset_reason_t::ESP_RST_DEEPSLEEP (C++ enumerator), 1693
esp_reset_reason_t::ESP_RST_EXT (C++ enumerator), 1692
esp_reset_reason_t::ESP_RST_INT_WDT (C++ enumerator), 1692
esp_reset_reason_t::ESP_RST_PANIC (C++ enumerator), 1692
esp_reset_reason_t::ESP_RST_POWERON (C++ enumerator), 1692
esp_reset_reason_t::ESP_RST_SDIO (C++ enumerator), 1693
esp_reset_reason_t::ESP_RST_SW (C++ enumerator), 1692
esp_reset_reason_t::ESP_RST_TASK_WDT (C++ enumerator), 1692
esp_reset_reason_t::ESP_RST_UNKNOWN (C++ enumerator), 1692
esp_reset_reason_t::ESP_RST_WDT (C++ enumerator), 1692
esp_restart (C++ function), 1691
esp_rom_delay_us (C++ function), 1735
esp_rom_get_reset_reason (C++ function), 1735
esp_rom_install_channel_putc (C++ function), 1735
esp_rom_install_uart_printf (C++ function), 1735
esp_rom_printf (C++ function), 1735
esp_sco_data_path_t (C++ enum), 160
esp_sco_data_path_t::ESP_SCO_DATA_PATH_HCI (C++ enumerator), 160
esp_sco_data_path_t::ESP_SCO_DATA_PATH_PCM (C++ enumerator), 160
esp_service_source_t (C++ enum), 241
esp_service_source_t::ESP_GATT_SERVICE_FROM_NVS_F

(C++ *enumerator*), 241
esp_service_source_t::ESP_GATT_SERVICE_FROM_REMOTE_DEVICE (C++ *enumerator*), 241
esp_service_source_t::ESP_GATT_SERVICE_FROM_UNKNOWN (C++ *enumerator*), 241
esp_set_deep_sleep_wake_stub (C++ *function*), 1724
esp_sleep_config_gpio_isolate (C++ *function*), 1725
esp_sleep_disable_wakeup_source (C++ *function*), 1720
esp_sleep_disable_wifi_wakeup (C++ *function*), 1723
esp_sleep_enable_ext0_wakeup (C++ *function*), 1722
esp_sleep_enable_ext1_wakeup (C++ *function*), 1722
esp_sleep_enable_gpio_switch (C++ *function*), 1725
esp_sleep_enable_gpio_wakeup (C++ *function*), 1723
esp_sleep_enable_timer_wakeup (C++ *function*), 1721
esp_sleep_enable_touchpad_wakeup (C++ *function*), 1721
esp_sleep_enable_uart_wakeup (C++ *function*), 1723
esp_sleep_enable_ulp_wakeup (C++ *function*), 1721
esp_sleep_enable_wifi_wakeup (C++ *function*), 1723
esp_sleep_ext1_wakeup_mode_t (C++ *enum*), 1725
esp_sleep_ext1_wakeup_mode_t::ESP_EXT1_WAKEUP_ALL_LOW (C++ *enumerator*), 1725
esp_sleep_ext1_wakeup_mode_t::ESP_EXT1_WAKEUP_ANY_HIGH (C++ *enumerator*), 1725
esp_sleep_get_ext1_wakeup_status (C++ *function*), 1723
esp_sleep_get_touchpad_wakeup_status (C++ *function*), 1721
esp_sleep_get_wakeup_cause (C++ *function*), 1724
esp_sleep_is_valid_wakeup_gpio (C++ *function*), 1721
esp_sleep_pd_config (C++ *function*), 1723
esp_sleep_pd_domain_t (C++ *enum*), 1725
esp_sleep_pd_domain_t::ESP_PD_DOMAIN_MAX (C++ *enumerator*), 1726
esp_sleep_pd_domain_t::ESP_PD_DOMAIN_RTC8M (C++ *enumerator*), 1726
esp_sleep_pd_domain_t::ESP_PD_DOMAIN_RTC_FAST_MEM (C++ *enumerator*), 1725
esp_sleep_pd_domain_t::ESP_PD_DOMAIN_RTC_PERIPH (C++ *enumerator*), 1725
esp_sleep_pd_domain_t::ESP_PD_DOMAIN_RTC_SLOW_MEM (C++ *enumerator*), 1725
esp_sleep_pd_domain_t::ESP_PD_DOMAIN_VDDSDIO (C++ *enumerator*), 1726
esp_sleep_pd_domain_t::ESP_PD_DOMAIN_XTAL (C++ *enumerator*), 1726
esp_sleep_pd_option_t (C++ *enum*), 1726
esp_sleep_pd_option_t::ESP_PD_OPTION_AUTO (C++ *enumerator*), 1726
esp_sleep_pd_option_t::ESP_PD_OPTION_OFF (C++ *enumerator*), 1726
esp_sleep_pd_option_t::ESP_PD_OPTION_ON (C++ *enumerator*), 1726
esp_sleep_source_t (C++ *enum*), 1726
esp_sleep_source_t::ESP_SLEEP_WAKEUP_ALL (C++ *enumerator*), 1726
esp_sleep_source_t::ESP_SLEEP_WAKEUP_BT (C++ *enumerator*), 1727
esp_sleep_source_t::ESP_SLEEP_WAKEUP_COCPU (C++ *enumerator*), 1727
esp_sleep_source_t::ESP_SLEEP_WAKEUP_COCPU_TRAP_T (C++ *enumerator*), 1727
esp_sleep_source_t::ESP_SLEEP_WAKEUP_EXT0 (C++ *enumerator*), 1726
esp_sleep_source_t::ESP_SLEEP_WAKEUP_EXT1 (C++ *enumerator*), 1726
esp_sleep_source_t::ESP_SLEEP_WAKEUP_GPIO (C++ *enumerator*), 1727
esp_sleep_source_t::ESP_SLEEP_WAKEUP_TIMER (C++ *enumerator*), 1726
esp_sleep_source_t::ESP_SLEEP_WAKEUP_TOUCHPAD (C++ *enumerator*), 1726
esp_sleep_source_t::ESP_SLEEP_WAKEUP_UART (C++ *enumerator*), 1727
esp_sleep_source_t::ESP_SLEEP_WAKEUP_ULP (C++ *enumerator*), 1727
esp_sleep_source_t::ESP_SLEEP_WAKEUP_UNDEFINED (C++ *enumerator*), 1726
esp_sleep_source_t::ESP_SLEEP_WAKEUP_WIFI (C++ *enumerator*), 1727
esp_sleep_wakeup_cause_t (C++ *type*), 1725
esp_smartconfig_fast_mode (C++ *function*), 717
esp_smartconfig_get_rvd_data (C++ *function*), 718
esp_smartconfig_get_version (C++ *function*), 717
esp_smartconfig_set_type (C++ *function*), 717
esp_smartconfig_start (C++ *function*), 717
esp_smartconfig_stop (C++ *function*), 717
esp_spiffs_check (C++ *function*), 1420
esp_spiffs_format (C++ *function*), 1419
esp_spiffs_info (C++ *function*), 1419
esp_spiffs_mounted (C++ *function*), 1419
esp_spp_cb_event_t (C++ *enum*), 344
esp_spp_cb_event_t::ESP_SPP_CL_INIT_EVT (C++ *enumerator*), 345
esp_spp_cb_event_t::ESP_SPP_CLOSE_EVT (C++ *enumerator*), 345
esp_spp_cb_event_t::ESP_SPP_CONG_EVT

(C++ *enumerator*), 345
esp_spp_cb_event_t::ESP_SPP_DATA_IND_EVT (C++ *enumerator*), 345
esp_spp_cb_event_t::ESP_SPP_DISCOVERY_COMP_EVT (C++ *enumerator*), 345
esp_spp_cb_event_t::ESP_SPP_INIT_EVT (C++ *enumerator*), 345
esp_spp_cb_event_t::ESP_SPP_OPEN_EVT (C++ *enumerator*), 345
esp_spp_cb_event_t::ESP_SPP_SRV_OPEN_EVT (C++ *enumerator*), 345
esp_spp_cb_event_t::ESP_SPP_SRV_STOP_EVT (C++ *enumerator*), 345
esp_spp_cb_event_t::ESP_SPP_START_EVT (C++ *enumerator*), 345
esp_spp_cb_event_t::ESP_SPP_UNINIT_EVT (C++ *enumerator*), 345
esp_spp_cb_event_t::ESP_SPP_WRITE_EVT (C++ *enumerator*), 345
esp_spp_cb_param_t (C++ *union*), 338
esp_spp_cb_param_t::cl_init (C++ *member*), 338
esp_spp_cb_param_t::close (C++ *member*), 338
esp_spp_cb_param_t::cong (C++ *member*), 339
esp_spp_cb_param_t::data_ind (C++ *member*), 338
esp_spp_cb_param_t::disc_comp (C++ *member*), 338
esp_spp_cb_param_t::init (C++ *member*), 338
esp_spp_cb_param_t::open (C++ *member*), 338
esp_spp_cb_param_t::spp_cl_init_evt_param (C++ *struct*), 339
esp_spp_cb_param_t::spp_cl_init_evt_param::fd (C++ *member*), 339
esp_spp_cb_param_t::spp_cl_init_evt_param::sec_id (C++ *member*), 339
esp_spp_cb_param_t::spp_cl_init_evt_param::status (C++ *member*), 339
esp_spp_cb_param_t::spp_close_evt_param (C++ *struct*), 339
esp_spp_cb_param_t::spp_close_evt_param::async (C++ *member*), 339
esp_spp_cb_param_t::spp_close_evt_param::handle (C++ *member*), 339
esp_spp_cb_param_t::spp_close_evt_param::port_status (C++ *member*), 339
esp_spp_cb_param_t::spp_close_evt_param::status (C++ *member*), 339
esp_spp_cb_param_t::spp_cong_evt_param (C++ *struct*), 339
esp_spp_cb_param_t::spp_cong_evt_param::cong (C++ *member*), 340
esp_spp_cb_param_t::spp_cong_evt_param::handle (C++ *member*), 340
esp_spp_cb_param_t::spp_cong_evt_param::status (C++ *member*), 339
esp_spp_cb_param_t::spp_data_ind_evt_param (C++ *struct*), 340
esp_spp_cb_param_t::spp_data_ind_evt_param::data (C++ *member*), 340
esp_spp_cb_param_t::spp_data_ind_evt_param::handl (C++ *member*), 340
esp_spp_cb_param_t::spp_data_ind_evt_param::len (C++ *member*), 340
esp_spp_cb_param_t::spp_data_ind_evt_param::statu (C++ *member*), 340
esp_spp_cb_param_t::spp_discovery_comp_evt_param (C++ *struct*), 340
esp_spp_cb_param_t::spp_discovery_comp_evt_param: (C++ *member*), 340
esp_spp_cb_param_t::spp_discovery_comp_evt_param: (C++ *member*), 340
esp_spp_cb_param_t::spp_discovery_comp_evt_param: (C++ *member*), 340
esp_spp_cb_param_t::spp_discovery_comp_evt_param: (C++ *member*), 340
esp_spp_cb_param_t::spp_init_evt_param (C++ *struct*), 340
esp_spp_cb_param_t::spp_init_evt_param::status (C++ *member*), 341
esp_spp_cb_param_t::spp_open_evt_param (C++ *struct*), 341
esp_spp_cb_param_t::spp_open_evt_param::fd (C++ *member*), 341
esp_spp_cb_param_t::spp_open_evt_param::handle (C++ *member*), 341
esp_spp_cb_param_t::spp_open_evt_param::rem_bda (C++ *member*), 341
esp_spp_cb_param_t::spp_open_evt_param::status (C++ *member*), 341
esp_spp_cb_param_t::spp_srv_open_evt_param (C++ *struct*), 341
esp_spp_cb_param_t::spp_srv_open_evt_param::fd (C++ *member*), 341
esp_spp_cb_param_t::spp_srv_open_evt_param::handl (C++ *member*), 341
esp_spp_cb_param_t::spp_srv_open_evt_param::new_l (C++ *member*), 341
esp_spp_cb_param_t::spp_srv_open_evt_param::rem_b (C++ *member*), 341
esp_spp_cb_param_t::spp_srv_open_evt_param::statu (C++ *member*), 341
esp_spp_cb_param_t::spp_srv_stop_evt_param (C++ *struct*), 341
esp_spp_cb_param_t::spp_srv_stop_evt_param::scn (C++ *member*), 342
esp_spp_cb_param_t::spp_srv_stop_evt_param::statu (C++ *member*), 342
esp_spp_cb_param_t::spp_start_evt_param (C++ *struct*), 342

esp_spp_cb_param_t::spp_start_evt_param::handle (C++ member), 342
esp_spp_cb_param_t::spp_start_evt_param::scn (C++ member), 342
esp_spp_cb_param_t::spp_start_evt_param::sec_id (C++ member), 342
esp_spp_cb_param_t::spp_start_evt_param::status (C++ member), 342
esp_spp_cb_param_t::spp_start_evt_param::use_co (C++ member), 342
esp_spp_cb_param_t::spp_uninit_evt_param (C++ struct), 342
esp_spp_cb_param_t::spp_uninit_evt_param::status (C++ member), 342
esp_spp_cb_param_t::spp_write_evt_param (C++ struct), 342
esp_spp_cb_param_t::spp_write_evt_param::cong (C++ member), 343
esp_spp_cb_param_t::spp_write_evt_param::handle (C++ member), 342
esp_spp_cb_param_t::spp_write_evt_param::len (C++ member), 342
esp_spp_cb_param_t::spp_write_evt_param::status (C++ member), 342
esp_spp_cb_param_t::srv_open (C++ member), 338
esp_spp_cb_param_t::srv_stop (C++ member), 338
esp_spp_cb_param_t::start (C++ member), 338
esp_spp_cb_param_t::uninit (C++ member), 338
esp_spp_cb_param_t::write (C++ member), 338
esp_spp_cb_t (C++ type), 343
esp_spp_connect (C++ function), 336
esp_spp_deinit (C++ function), 336
esp_spp_disconnect (C++ function), 337
esp_spp_init (C++ function), 336
ESP_SPP_MAX_MTU (C macro), 343
ESP_SPP_MAX_SCN (C macro), 343
esp_spp_mode_t (C++ enum), 344
esp_spp_mode_t::ESP_SPP_MODE_CB (C++ enumerator), 344
esp_spp_mode_t::ESP_SPP_MODE_VFS (C++ enumerator), 344
esp_spp_register_callback (C++ function), 336
esp_spp_role_t (C++ enum), 344
esp_spp_role_t::ESP_SPP_ROLE_MASTER (C++ enumerator), 344
esp_spp_role_t::ESP_SPP_ROLE_SLAVE (C++ enumerator), 344
ESP_SPP_SEC_AUTHENTICATE (C macro), 343
ESP_SPP_SEC_AUTHORIZE (C macro), 343
ESP_SPP_SEC_ENCRYPT (C macro), 343
ESP_SPP_SEC_IN_16_DIGITS (C macro), 343
ESP_SPP_SEC_MITM (C macro), 343
ESP_SPP_SEC_MODE4_LEVEL4 (C macro), 343
ESP_SPP_SEC_NONE (C macro), 343
esp_spp_sec_t (C++ type), 343
esp_spp_start_discovery (C++ function), 336
esp_spp_start_srv (C++ function), 337
esp_spp_status_t (C++ enum), 343
esp_spp_status_t::ESP_SPP_BUSY (C++ enumerator), 344
esp_spp_status_t::ESP_SPP_FAILURE (C++ enumerator), 344
esp_spp_status_t::ESP_SPP_NEED_DEINIT (C++ enumerator), 344
esp_spp_status_t::ESP_SPP_NEED_INIT (C++ enumerator), 344
esp_spp_status_t::ESP_SPP_NO_CONNECTION (C++ enumerator), 344
esp_spp_status_t::ESP_SPP_NO_DATA (C++ enumerator), 344
esp_spp_status_t::ESP_SPP_NO_RESOURCE (C++ enumerator), 344
esp_spp_status_t::ESP_SPP_NO_SERVER (C++ enumerator), 344
esp_spp_status_t::ESP_SPP_SUCCESS (C++ enumerator), 344
esp_spp_stop_srv (C++ function), 337
esp_spp_stop_srv_scn (C++ function), 337
esp_spp_vfs_register (C++ function), 338
esp_spp_write (C++ function), 337
esp_supp_dpp_bootstrap_gen (C++ function), 767
esp_supp_dpp_bootstrap_t (C++ type), 768
esp_supp_dpp_deinit (C++ function), 767
esp_supp_dpp_event_cb_t (C++ type), 768
esp_supp_dpp_event_t (C++ enum), 768
esp_supp_dpp_event_t::ESP_SUPP_DPP_CFG_RECVD (C++ enumerator), 768
esp_supp_dpp_event_t::ESP_SUPP_DPP_FAIL (C++ enumerator), 768
esp_supp_dpp_event_t::ESP_SUPP_DPP_URI_READY (C++ enumerator), 768
esp_supp_dpp_init (C++ function), 767
esp_supp_dpp_start_listen (C++ function), 767
esp_supp_dpp_stop_listen (C++ function), 767
esp_system_abort (C++ function), 1692
esp_sysview_flush (C++ function), 1450
esp_sysview_heap_trace_alloc (C++ function), 1450
esp_sysview_heap_trace_free (C++ function), 1451
esp_sysview_heap_trace_start (C++ function), 1450
esp_sysview_heap_trace_stop (C++ function), 1450
esp_sysview_vprintf (C++ function), 1450
esp_task_wdt_add (C++ function), 1729
esp_task_wdt_deinit (C++ function), 1729

esp_task_wdt_delete (*C++ function*), 1730
esp_task_wdt_init (*C++ function*), 1729
esp_task_wdt_reset (*C++ function*), 1730
esp_task_wdt_status (*C++ function*), 1730
esp_timer_cb_t (*C++ type*), 1665
esp_timer_create (*C++ function*), 1663
esp_timer_create_args_t (*C++ struct*), 1665
esp_timer_create_args_t::arg (*C++ member*), 1665
esp_timer_create_args_t::callback (*C++ member*), 1665
esp_timer_create_args_t::dispatch_method (*C++ member*), 1665
esp_timer_create_args_t::name (*C++ member*), 1665
esp_timer_create_args_t::skip_unhandled_events (*C++ member*), 1665
esp_timer_deinit (*C++ function*), 1663
esp_timer_delete (*C++ function*), 1664
esp_timer_dispatch_t (*C++ enum*), 1666
esp_timer_dispatch_t::ESP_TIMER_MAX (*C++ enumerator*), 1666
esp_timer_dispatch_t::ESP_TIMER_TASK (*C++ enumerator*), 1666
esp_timer_dump (*C++ function*), 1664
esp_timer_early_init (*C++ function*), 1662
esp_timer_get_next_alarm (*C++ function*), 1664
esp_timer_get_next_alarm_for_wake_up (*C++ function*), 1664
esp_timer_get_time (*C++ function*), 1664
esp_timer_handle_t (*C++ type*), 1665
esp_timer_init (*C++ function*), 1663
esp_timer_is_active (*C++ function*), 1665
esp_timer_start_once (*C++ function*), 1663
esp_timer_start_periodic (*C++ function*), 1664
esp_timer_stop (*C++ function*), 1664
esp_tls (*C++ struct*), 1148
esp_tls::cacert (*C++ member*), 1149
esp_tls::cacert_ptr (*C++ member*), 1149
esp_tls::clientcert (*C++ member*), 1149
esp_tls::clientkey (*C++ member*), 1149
esp_tls::conf (*C++ member*), 1149
esp_tls::conn_state (*C++ member*), 1149
esp_tls::ctr_drbg (*C++ member*), 1149
esp_tls::entropy (*C++ member*), 1149
esp_tls::error_handle (*C++ member*), 1150
esp_tls::is_tls (*C++ member*), 1149
esp_tls::read (*C++ member*), 1149
esp_tls::role (*C++ member*), 1150
esp_tls::rset (*C++ member*), 1149
esp_tls::server_fd (*C++ member*), 1149
esp_tls::sockfd (*C++ member*), 1149
esp_tls::ssl (*C++ member*), 1149
esp_tls::write (*C++ member*), 1149
esp_tls::wset (*C++ member*), 1149
esp_tls_cfg (*C++ struct*), 1146
esp_tls_cfg::alpn_protos (*C++ member*), 1147
esp_tls_cfg::cacert_buf (*C++ member*), 1147
esp_tls_cfg::cacert_bytes (*C++ member*), 1147
esp_tls_cfg::cacert_pem_buf (*C++ member*), 1147
esp_tls_cfg::cacert_pem_bytes (*C++ member*), 1147
esp_tls_cfg::clientcert_buf (*C++ member*), 1147
esp_tls_cfg::clientcert_bytes (*C++ member*), 1147
esp_tls_cfg::clientcert_pem_buf (*C++ member*), 1147
esp_tls_cfg::clientcert_pem_bytes (*C++ member*), 1147
esp_tls_cfg::clientkey_buf (*C++ member*), 1147
esp_tls_cfg::clientkey_bytes (*C++ member*), 1147
esp_tls_cfg::clientkey_password (*C++ member*), 1147
esp_tls_cfg::clientkey_password_len (*C++ member*), 1148
esp_tls_cfg::clientkey_pem_buf (*C++ member*), 1147
esp_tls_cfg::clientkey_pem_bytes (*C++ member*), 1147
esp_tls_cfg::common_name (*C++ member*), 1148
esp_tls_cfg::crt_bundle_attach (*C++ member*), 1148
esp_tls_cfg::ds_data (*C++ member*), 1148
esp_tls_cfg::if_name (*C++ member*), 1148
esp_tls_cfg::is_plain_tcp (*C++ member*), 1148
esp_tls_cfg::keep_alive_cfg (*C++ member*), 1148
esp_tls_cfg::non_block (*C++ member*), 1148
esp_tls_cfg::psk_hint_key (*C++ member*), 1148
esp_tls_cfg::skip_common_name (*C++ member*), 1148
esp_tls_cfg::timeout_ms (*C++ member*), 1148
esp_tls_cfg::use_global_ca_store (*C++ member*), 1148
esp_tls_cfg::use_secure_element (*C++ member*), 1148
esp_tls_cfg_t (*C++ type*), 1150
esp_tls_conn_delete (*C++ function*), 1143
esp_tls_conn_destroy (*C++ function*), 1143
esp_tls_conn_http_new (*C++ function*), 1142
esp_tls_conn_http_new_async (*C++ function*), 1143
esp_tls_conn_new (*C++ function*), 1142

esp_tls_conn_new_async (C++ function), 1142
esp_tls_conn_new_sync (C++ function), 1142
esp_tls_conn_read (C++ function), 1143
esp_tls_conn_state (C++ enum), 1150
esp_tls_conn_state::ESP_TLS_CONNECTING (C++ enumerator), 1150
esp_tls_conn_state::ESP_TLS_DONE (C++ enumerator), 1151
esp_tls_conn_state::ESP_TLS_FAIL (C++ enumerator), 1151
esp_tls_conn_state::ESP_TLS_HANDSHAKE (C++ enumerator), 1151
esp_tls_conn_state::ESP_TLS_INIT (C++ enumerator), 1150
esp_tls_conn_state_t (C++ type), 1150
esp_tls_conn_write (C++ function), 1143
esp_tls_free_global_ca_store (C++ function), 1144
esp_tls_get_and_clear_error_type (C++ function), 1145
esp_tls_get_and_clear_last_error (C++ function), 1144
esp_tls_get_bytes_avail (C++ function), 1144
esp_tls_get_conn_sockfd (C++ function), 1144
esp_tls_get_global_ca_store (C++ function), 1145
esp_tls_init (C++ function), 1141
esp_tls_init_global_ca_store (C++ function), 1144
esp_tls_plain_tcp_connect (C++ function), 1145
esp_tls_role (C++ enum), 1151
esp_tls_role::ESP_TLS_CLIENT (C++ enumerator), 1151
esp_tls_role::ESP_TLS_SERVER (C++ enumerator), 1151
esp_tls_role_t (C++ type), 1150
esp_tls_set_global_ca_store (C++ function), 1144
esp_tls_t (C++ type), 1150
esp_unregister_shutdown_handler (C++ function), 1691
ESP_UUID_LEN_128 (C macro), 162
ESP_UUID_LEN_16 (C macro), 161
ESP_UUID_LEN_32 (C macro), 162
esp_vendor_ie_cb_t (C++ type), 686
esp_vfs_close (C++ function), 1425
esp_vfs_dev_uart_port_set_rx_line_endings (C++ function), 1434
esp_vfs_dev_uart_port_set_tx_line_endings (C++ function), 1434
esp_vfs_dev_uart_register (C++ function), 1433
esp_vfs_dev_uart_set_rx_line_endings (C++ function), 1433
esp_vfs_dev_uart_set_tx_line_endings (C++ function), 1433
esp_vfs_dev_uart_use_driver (C++ function), 1435
esp_vfs_dev_uart_use_nonblocking (C++ function), 1435
ESP_VFS_EVENTD_CONFIG_DEFAULT (C macro), 1436
esp_vfs_eventfd_config_t (C++ struct), 1435
esp_vfs_eventfd_config_t::max_fds (C++ member), 1435
esp_vfs_eventfd_register (C++ function), 1435
esp_vfs_eventfd_unregister (C++ function), 1435
esp_vfs_fat_mount_config_t (C++ struct), 1339, 1437
esp_vfs_fat_mount_config_t::allocation_unit_size (C++ member), 1340, 1438
esp_vfs_fat_mount_config_t::format_if_mount_faile (C++ member), 1339, 1437
esp_vfs_fat_mount_config_t::max_files (C++ member), 1340, 1437
esp_vfs_fat_rawflash_mount (C++ function), 1340
esp_vfs_fat_rawflash_unmount (C++ function), 1341
esp_vfs_fat_register (C++ function), 1337
esp_vfs_fat_sdcard_unmount (C++ function), 1340
esp_vfs_fat_sdmmc_mount (C++ function), 1338
esp_vfs_fat_sdspi_mount (C++ function), 1339
esp_vfs_fat_spiflash_mount (C++ function), 1437
esp_vfs_fat_spiflash_unmount (C++ function), 1438
esp_vfs_fat_unregister_path (C++ function), 1338
ESP_VFS_FLAG_CONTEXT_PTR (C macro), 1433
ESP_VFS_FLAG_DEFAULT (C macro), 1433
esp_vfs_fstat (C++ function), 1425
esp_vfs_id_t (C++ type), 1433
esp_vfs_link (C++ function), 1425
esp_vfs_lseek (C++ function), 1425
esp_vfs_open (C++ function), 1425
ESP_VFS_PATH_MAX (C macro), 1433
esp_vfs_pread (C++ function), 1427
esp_vfs_pwrite (C++ function), 1427
esp_vfs_read (C++ function), 1425
esp_vfs_register (C++ function), 1425
esp_vfs_register_fd (C++ function), 1426
esp_vfs_register_fd_range (C++ function), 1425
esp_vfs_register_fd_with_local_fd (C++ function), 1426
esp_vfs_register_with_id (C++ function), 1425

esp_vfs_rename (*C++ function*), 1425
esp_vfs_select (*C++ function*), 1426
esp_vfs_select_sem_t (*C++ struct*), 1427
esp_vfs_select_sem_t::is_sem_local (*C++ member*), 1427
esp_vfs_select_sem_t::sem (*C++ member*), 1427
esp_vfs_select_triggered (*C++ function*), 1427
esp_vfs_select_triggered_isr (*C++ function*), 1427
esp_vfs_spiffs_conf_t (*C++ struct*), 1420
esp_vfs_spiffs_conf_t::base_path (*C++ member*), 1420
esp_vfs_spiffs_conf_t::format_if_mount_failed (*C++ member*), 1420
esp_vfs_spiffs_conf_t::max_files (*C++ member*), 1420
esp_vfs_spiffs_conf_t::partition_label (*C++ member*), 1420
esp_vfs_spiffs_register (*C++ function*), 1419
esp_vfs_spiffs_unregister (*C++ function*), 1419
esp_vfs_stat (*C++ function*), 1425
esp_vfs_t (*C++ struct*), 1428
esp_vfs_t::access (*C++ member*), 1431
esp_vfs_t::access_p (*C++ member*), 1431
esp_vfs_t::close (*C++ member*), 1429
esp_vfs_t::close_p (*C++ member*), 1429
esp_vfs_t::closedir (*C++ member*), 1430
esp_vfs_t::closedir_p (*C++ member*), 1430
esp_vfs_t::end_select (*C++ member*), 1433
esp_vfs_t::fcntl (*C++ member*), 1430
esp_vfs_t::fcntl_p (*C++ member*), 1430
esp_vfs_t::flags (*C++ member*), 1428
esp_vfs_t::fstat (*C++ member*), 1429
esp_vfs_t::fstat_p (*C++ member*), 1429
esp_vfs_t::fsync (*C++ member*), 1431
esp_vfs_t::fsync_p (*C++ member*), 1431
esp_vfs_t::ftruncate (*C++ member*), 1431
esp_vfs_t::ftruncate_p (*C++ member*), 1431
esp_vfs_t::get_socket_select_semaphore (*C++ member*), 1432
esp_vfs_t::ioctl (*C++ member*), 1431
esp_vfs_t::ioctl_p (*C++ member*), 1431
esp_vfs_t::link (*C++ member*), 1429
esp_vfs_t::link_p (*C++ member*), 1429
esp_vfs_t::lseek (*C++ member*), 1428
esp_vfs_t::lseek_p (*C++ member*), 1428
esp_vfs_t::mkdir (*C++ member*), 1430
esp_vfs_t::mkdir_p (*C++ member*), 1430
esp_vfs_t::open (*C++ member*), 1429
esp_vfs_t::open_p (*C++ member*), 1429
esp_vfs_t::opendir (*C++ member*), 1429
esp_vfs_t::opendir_p (*C++ member*), 1429
esp_vfs_t::pread (*C++ member*), 1428
esp_vfs_t::pread_p (*C++ member*), 1428
esp_vfs_t::pwrite (*C++ member*), 1428
esp_vfs_t::pwrite_p (*C++ member*), 1428
esp_vfs_t::read (*C++ member*), 1428
esp_vfs_t::read_p (*C++ member*), 1428
esp_vfs_t::readdir (*C++ member*), 1430
esp_vfs_t::readdir_p (*C++ member*), 1430
esp_vfs_t::readdir_r (*C++ member*), 1430
esp_vfs_t::readdir_r_p (*C++ member*), 1430
esp_vfs_t::rename (*C++ member*), 1429
esp_vfs_t::rename_p (*C++ member*), 1429
esp_vfs_t::rmdir (*C++ member*), 1430
esp_vfs_t::rmdir_p (*C++ member*), 1430
esp_vfs_t::seekdir (*C++ member*), 1430
esp_vfs_t::seekdir_p (*C++ member*), 1430
esp_vfs_t::socket_select (*C++ member*), 1432
esp_vfs_t::start_select (*C++ member*), 1432
esp_vfs_t::stat (*C++ member*), 1429
esp_vfs_t::stat_p (*C++ member*), 1429
esp_vfs_t::stop_socket_select (*C++ member*), 1432
esp_vfs_t::stop_socket_select_isr (*C++ member*), 1432
esp_vfs_t::tcdrain (*C++ member*), 1432
esp_vfs_t::tcdrain_p (*C++ member*), 1432
esp_vfs_t::tcflow (*C++ member*), 1432
esp_vfs_t::tcflow_p (*C++ member*), 1432
esp_vfs_t::tcflush (*C++ member*), 1432
esp_vfs_t::tcflush_p (*C++ member*), 1432
esp_vfs_t::tcgetattr (*C++ member*), 1431
esp_vfs_t::tcgetattr_p (*C++ member*), 1431
esp_vfs_t::tcgetsid (*C++ member*), 1432
esp_vfs_t::tcgetsid_p (*C++ member*), 1432
esp_vfs_t::tcsendbreak (*C++ member*), 1432
esp_vfs_t::tcsendbreak_p (*C++ member*), 1432
esp_vfs_t::tcsetattr (*C++ member*), 1431
esp_vfs_t::tcsetattr_p (*C++ member*), 1431
esp_vfs_t::telldir (*C++ member*), 1430
esp_vfs_t::telldir_p (*C++ member*), 1430
esp_vfs_t::truncate (*C++ member*), 1431
esp_vfs_t::truncate_p (*C++ member*), 1431
esp_vfs_t::unlink (*C++ member*), 1429
esp_vfs_t::unlink_p (*C++ member*), 1429
esp_vfs_t::utime (*C++ member*), 1431
esp_vfs_t::utime_p (*C++ member*), 1431
esp_vfs_t::write (*C++ member*), 1428
esp_vfs_t::write_p (*C++ member*), 1428
esp_vfs_unlink (*C++ function*), 1425
esp_vfs_unregister (*C++ function*), 1426
esp_vfs_unregister_fd (*C++ function*), 1426
esp_vfs_unregister_with_id (*C++ function*), 1426
esp_vfs_usb_serial_jtag_use_driver (*C++ function*), 1435
esp_vfs_usb_serial_jtag_use_nonblocking (*C++ function*), 1435

esp_vfs_utime (C++ function), 1425
esp_vfs_write (C++ function), 1425
esp_vhci_host_callback (C++ struct), 156
esp_vhci_host_callback::notify_host_recv (C++ member), 156
esp_vhci_host_callback::notify_host_send_available (C++ member), 156
esp_vhci_host_callback_t (C++ type), 157
esp_vhci_host_check_send_available (C++ function), 153
esp_vhci_host_register_callback (C++ function), 153
esp_vhci_host_send_packet (C++ function), 153
esp_wake_deep_sleep (C++ function), 1724
esp_websocket_client_close (C++ function), 1279
esp_websocket_client_close_with_code (C++ function), 1279
esp_websocket_client_config_t (C++ struct), 1280
esp_websocket_client_config_t::buffer_size (C++ member), 1281
esp_websocket_client_config_t::cert_len (C++ member), 1281
esp_websocket_client_config_t::cert_pem (C++ member), 1281
esp_websocket_client_config_t::client_cert_key (C++ member), 1281
esp_websocket_client_config_t::client_cert_key_len (C++ member), 1281
esp_websocket_client_config_t::client_key (C++ member), 1281
esp_websocket_client_config_t::client_key_len (C++ member), 1281
esp_websocket_client_config_t::disable_auto_reconnect (C++ member), 1281
esp_websocket_client_config_t::disable_pingpong_discon (C++ member), 1282
esp_websocket_client_config_t::headers (C++ member), 1282
esp_websocket_client_config_t::host (C++ member), 1280
esp_websocket_client_config_t::if_name (C++ member), 1282
esp_websocket_client_config_t::keep_alive_count (C++ member), 1282
esp_websocket_client_config_t::keep_alive_enable (C++ member), 1282
esp_websocket_client_config_t::keep_alive_idle (C++ member), 1282
esp_websocket_client_config_t::keep_alive_interval (C++ member), 1282
esp_websocket_client_config_t::password (C++ member), 1281
esp_websocket_client_config_t::path (C++ member), 1281
esp_websocket_client_config_t::ping_interval_sec (C++ member), 1282
esp_websocket_client_config_t::pingpong_timeout_sec (C++ member), 1282
esp_websocket_client_config_t::port (C++ member), 1280
esp_websocket_client_config_t::skip_cert_common_name_check (C++ member), 1282
esp_websocket_client_config_t::subprotocol (C++ member), 1282
esp_websocket_client_config_t::task_prio (C++ member), 1281
esp_websocket_client_config_t::task_stack (C++ member), 1281
esp_websocket_client_config_t::transport (C++ member), 1282
esp_websocket_client_config_t::uri (C++ member), 1280
esp_websocket_client_config_t::use_global_ca_store (C++ member), 1282
esp_websocket_client_config_t::user_agent (C++ member), 1282
esp_websocket_client_config_t::user_context (C++ member), 1281
esp_websocket_client_config_t::username (C++ member), 1281
esp_websocket_client_destroy (C++ function), 1278
esp_websocket_client_handle_t (C++ type), 1282
esp_websocket_client_init (C++ function), 1277
esp_websocket_client_is_connected (C++ function), 1279
esp_websocket_client_send (C++ function), 1278
esp_websocket_client_send_bin (C++ function), 1278
esp_websocket_client_send_text (C++ function), 1279
esp_websocket_client_set_uri (C++ function), 1277
esp_websocket_client_start (C++ function), 1278
esp_websocket_client_stop (C++ function), 1278
esp_websocket_event_data_t (C++ struct), 1280
esp_websocket_event_data_t::client (C++ member), 1280
esp_websocket_event_data_t::data_len (C++ member), 1280
esp_websocket_event_data_t::data_ptr (C++ member), 1280
esp_websocket_event_data_t::op_code (C++ member), 1280
esp_websocket_event_data_t::payload_len (C++ member), 1280
esp_websocket_event_data_t::payload_offset

(C++ *member*), 1280
esp_websocket_event_data_t::user_context (C++ *member*), 1280
esp_websocket_event_id_t (C++ *enum*), 1283
esp_websocket_event_id_t::WEBSOCKET_EVENT_ANY (C++ *enumerator*), 1283
esp_websocket_event_id_t::WEBSOCKET_EVENT_CLOSED (C++ *enumerator*), 1283
esp_websocket_event_id_t::WEBSOCKET_EVENT_CONNECTED (C++ *enumerator*), 1283
esp_websocket_event_id_t::WEBSOCKET_EVENT_DATA (C++ *enumerator*), 1283
esp_websocket_event_id_t::WEBSOCKET_EVENT_DISCONNECTED (C++ *enumerator*), 1283
esp_websocket_event_id_t::WEBSOCKET_EVENT_ERROR (C++ *enumerator*), 1283
esp_websocket_event_id_t::WEBSOCKET_EVENT_MAX (C++ *enumerator*), 1283
esp_websocket_register_events (C++ *function*), 1279
esp_websocket_transport_t (C++ *enum*), 1283
esp_websocket_transport_t::WEBSOCKET_TRANSPORT_OVER_SSL (C++ *enumerator*), 1283
esp_websocket_transport_t::WEBSOCKET_TRANSPORT_OVER_TCP (C++ *enumerator*), 1283
esp_websocket_transport_t::WEBSOCKET_TRANSPORT_UNKNOWN (C++ *enumerator*), 1283
esp_wifi_80211_tx (C++ *function*), 677
esp_wifi_ap_get_sta_aid (C++ *function*), 675
esp_wifi_ap_get_sta_list (C++ *function*), 675
esp_wifi_bt_power_domain_off (C++ *function*), 155
esp_wifi_bt_power_domain_on (C++ *function*), 155
esp_wifi_clear_default_wifi_driver_and_handlers (C++ *function*), 816
esp_wifi_clear_fast_connect (C++ *function*), 668
esp_wifi_config_11b_rate (C++ *function*), 680
esp_wifi_config_80211_tx_rate (C++ *function*), 681
esp_wifi_config_espnow_rate (C++ *function*), 723
esp_wifi_connect (C++ *function*), 668
esp_wifi_deauth_sta (C++ *function*), 668
esp_wifi_deinit (C++ *function*), 667
esp_wifi_disable_pmf_config (C++ *function*), 682
esp_wifi_disconnect (C++ *function*), 668
esp_wifi_ftm_end_session (C++ *function*), 680
esp_wifi_ftm_initiate_session (C++ *function*), 680
esp_wifi_ftm_resp_set_offset (C++ *function*), 680
esp_wifi_get_ant (C++ *function*), 678
esp_wifi_get_ant_gpio (C++ *function*), 678
esp_wifi_get_bandwidth (C++ *function*), 671
esp_wifi_get_channel (C++ *function*), 672
esp_wifi_get_config (C++ *function*), 674
esp_wifi_get_country (C++ *function*), 672
esp_wifi_get_country_code (C++ *function*), 681
esp_wifi_get_event_mask (C++ *function*), 677
esp_wifi_get_inactive_time (C++ *function*), 679
esp_wifi_get_mac (C++ *function*), 673
esp_wifi_get_max_tx_power (C++ *function*), 676
esp_wifi_get_mode (C++ *function*), 667
esp_wifi_get_promiscuous (C++ *function*), 673
esp_wifi_get_promiscuous_ctrl_filter (C++ *function*), 674
esp_wifi_get_promiscuous_filter (C++ *function*), 674
esp_wifi_get_protocol (C++ *function*), 670
esp_wifi_get_protocols (C++ *function*), 670
esp_wifi_get_tsf_time (C++ *function*), 679
esp_wifi_get_vht_protocol (C++ *function*), 666
ESP_WIFI_MAX_CONN_NUM (*C macro*), 703
esp_wifi_restore (C++ *function*), 668
esp_wifi_scan_get_ap_num (C++ *function*), 669
esp_wifi_scan_get_ap_records (C++ *function*), 669
esp_wifi_scan_start (C++ *function*), 669
esp_wifi_scan_stop (C++ *function*), 669
esp_wifi_set_ant (C++ *function*), 678
esp_wifi_set_ant_gpio (C++ *function*), 678
esp_wifi_set_bandwidth (C++ *function*), 671
esp_wifi_set_channel (C++ *function*), 671
esp_wifi_set_config (C++ *function*), 674
esp_wifi_set_connectionless_wake_interval (C++ *function*), 680
esp_wifi_set_country (C++ *function*), 672
esp_wifi_set_country_code (C++ *function*), 681
esp_wifi_set_csi (C++ *function*), 678
esp_wifi_set_csi_config (C++ *function*), 677
esp_wifi_set_csi_rx_cb (C++ *function*), 677
esp_wifi_set_default_wifi_ap_handlers (C++ *function*), 816
esp_wifi_set_default_wifi_sta_handlers (C++ *function*), 816
esp_wifi_set_event_mask (C++ *function*), 676
esp_wifi_set_inactive_time (C++ *function*), 679
esp_wifi_set_mac (C++ *function*), 672
esp_wifi_set_max_tx_power (C++ *function*), 676
esp_wifi_set_mode (C++ *function*), 667
esp_wifi_set_promiscuous (C++ *function*),

673
esp_wifi_set_promiscuous_ctrl_filter (C++ function), 674
esp_wifi_set_promiscuous_filter (C++ function), 673
esp_wifi_set_promiscuous_rx_cb (C++ function), 673
esp_wifi_set_protocol (C++ function), 670
esp_wifi_set_ps (C++ function), 670
esp_wifi_set_rssi_threshold (C++ function), 679
esp_wifi_set_storage (C++ function), 675
esp_wifi_set_vendor_ie (C++ function), 675
esp_wifi_set_vendor_ie_cb (C++ function), 676
esp_wifi_sta_get_ap_info (C++ function), 670
esp_wifi_start (C++ function), 667
esp_wifi_statis_dump (C++ function), 679
esp_wifi_stop (C++ function), 667
essl_clear_intr (C++ function), 1293
essl_get_intr (C++ function), 1293
essl_get_intr_ena (C++ function), 1293
essl_get_packet (C++ function), 1292
essl_get_rx_data_size (C++ function), 1291
essl_get_tx_buffer_num (C++ function), 1291
essl_handle_t (C++ type), 1294
essl_init (C++ function), 1291
essl_read_reg (C++ function), 1292
essl_reset_cnt (C++ function), 1291
essl_sdio_config_t (C++ struct), 1294
essl_sdio_config_t::card (C++ member), 1295
essl_sdio_config_t::recv_buffer_size (C++ member), 1295
essl_sdio_deinit_dev (C++ function), 1294
essl_sdio_init_dev (C++ function), 1294
essl_send_packet (C++ function), 1291
essl_send_slave_intr (C++ function), 1294
essl_set_intr_ena (C++ function), 1293
essl_spi_config_t (C++ struct), 1300
essl_spi_config_t::rx_sync_reg (C++ member), 1300
essl_spi_config_t::spi (C++ member), 1300
essl_spi_config_t::tx_buf_size (C++ member), 1300
essl_spi_config_t::tx_sync_reg (C++ member), 1300
essl_spi_deinit_dev (C++ function), 1295
essl_spi_get_packet (C++ function), 1295
essl_spi_init_dev (C++ function), 1295
essl_spi_rdbuf (C++ function), 1297
essl_spi_rdbuf_polling (C++ function), 1297
essl_spi_rddma (C++ function), 1298
essl_spi_rddma_done (C++ function), 1299
essl_spi_rddma_seg (C++ function), 1298
essl_spi_read_reg (C++ function), 1295
essl_spi_reset_cnt (C++ function), 1296
essl_spi_send_packet (C++ function), 1296
essl_spi_wrbuf (C++ function), 1297
essl_spi_wrbuf_polling (C++ function), 1298
essl_spi_wrdma (C++ function), 1299
essl_spi_wrdma_done (C++ function), 1300
essl_spi_wrdma_seg (C++ function), 1299
essl_spi_write_reg (C++ function), 1296
essl_wait_for_ready (C++ function), 1291
essl_wait_int (C++ function), 1293
essl_write_reg (C++ function), 1292
eTaskGetState (C++ function), 1518
eTaskState (C++ enum), 1540
eTaskState::eBlocked (C++ enumerator), 1541
eTaskState::eDeleted (C++ enumerator), 1541
eTaskState::eInvalid (C++ enumerator), 1541
eTaskState::eReady (C++ enumerator), 1541
eTaskState::eRunning (C++ enumerator), 1541
eTaskState::eSuspended (C++ enumerator), 1541
ETH_DEFAULT_CONFIG (C macro), 782
eth_event_t (C++ enum), 785
eth_event_t::ETHERNET_EVENT_CONNECTED (C++ enumerator), 785
eth_event_t::ETHERNET_EVENT_DISCONNECTED (C++ enumerator), 785
eth_event_t::ETHERNET_EVENT_START (C++ enumerator), 785
eth_event_t::ETHERNET_EVENT_STOP (C++ enumerator), 785
ETH_HEADER_LEN (C macro), 784
ETH_JUMBO_FRAME_PAYLOAD_LEN (C macro), 784
eth_mac_clock_config_t (C++ union), 786
eth_mac_clock_config_t::clock_gpio (C++ member), 786
eth_mac_clock_config_t::clock_mode (C++ member), 786
eth_mac_clock_config_t::mii (C++ member), 786
eth_mac_clock_config_t::rmii (C++ member), 786
eth_mac_config_t (C++ struct), 790
eth_mac_config_t::clock_config (C++ member), 790
eth_mac_config_t::flags (C++ member), 790
eth_mac_config_t::interface (C++ member), 790
eth_mac_config_t::rx_task_prio (C++ member), 790
eth_mac_config_t::rx_task_stack_size (C++ member), 790
eth_mac_config_t::smi_mdc_gpio_num (C++ member), 790
eth_mac_config_t::smi_mdio_gpio_num (C++ member), 790
eth_mac_config_t::sw_reset_timeout_ms (C++ member), 790
ETH_MAC_DEFAULT_CONFIG (C macro), 790

ETH_MAC_FLAG_PIN_TO_CORE (*C macro*), 790
ETH_MAC_FLAG_WORK_WITH_CACHE_DISABLE (*C macro*), 790
ETH_MAX_PACKET_SIZE (*C macro*), 784
ETH_MAX_PAYLOAD_LEN (*C macro*), 783
ETH_MIN_PACKET_SIZE (*C macro*), 784
ETH_MIN_PAYLOAD_LEN (*C macro*), 783
eth_phy_config_t (*C++ struct*), 795
eth_phy_config_t::autonego_timeout_ms (*C++ member*), 795
eth_phy_config_t::phy_addr (*C++ member*), 795
eth_phy_config_t::reset_gpio_num (*C++ member*), 795
eth_phy_config_t::reset_timeout_ms (*C++ member*), 795
ETH_PHY_DEFAULT_CONFIG (*C macro*), 795
ETH_VLAN_TAG_LEN (*C macro*), 784
ETS_INTERNAL_INTR_SOURCE_OFF (*C macro*), 1681
ETS_INTERNAL_PROFILING_INTR_SOURCE (*C macro*), 1681
ETS_INTERNAL_SW0_INTR_SOURCE (*C macro*), 1681
ETS_INTERNAL_SW1_INTR_SOURCE (*C macro*), 1681
ETS_INTERNAL_TIMER0_INTR_SOURCE (*C macro*), 1680
ETS_INTERNAL_TIMER1_INTR_SOURCE (*C macro*), 1680
ETS_INTERNAL_TIMER2_INTR_SOURCE (*C macro*), 1680
EventBits_t (*C++ type*), 1600
eventfd (*C++ function*), 1435
EventGroupHandle_t (*C++ type*), 1600
EXT_ADV_TX_PWR_NO_PREFERENCE (*C macro*), 215

F

ff_diskio_impl_t (*C++ struct*), 1341
ff_diskio_impl_t::init (*C++ member*), 1341
ff_diskio_impl_t::ioctl (*C++ member*), 1341
ff_diskio_impl_t::read (*C++ member*), 1341
ff_diskio_impl_t::status (*C++ member*), 1341
ff_diskio_impl_t::write (*C++ member*), 1341
ff_diskio_register (*C++ function*), 1341
ff_diskio_register_raw_partition (*C++ function*), 1342
ff_diskio_register_sdmmc (*C++ function*), 1341
ff_diskio_register_wl_partition (*C++ function*), 1342
filter_cb_t (*C++ type*), 1073

G

gpio_config (*C++ function*), 861
gpio_config_t (*C++ struct*), 867
gpio_config_t::intr_type (*C++ member*), 867
gpio_config_t::mode (*C++ member*), 867
gpio_config_t::pin_bit_mask (*C++ member*), 867
gpio_config_t::pull_down_en (*C++ member*), 867
gpio_config_t::pull_up_en (*C++ member*), 867
gpio_deep_sleep_hold_dis (*C++ function*), 865
gpio_deep_sleep_hold_en (*C++ function*), 865
gpio_drive_cap_t (*C++ enum*), 876
gpio_drive_cap_t::GPIO_DRIVE_CAP_0 (*C++ enumerator*), 876
gpio_drive_cap_t::GPIO_DRIVE_CAP_1 (*C++ enumerator*), 876
gpio_drive_cap_t::GPIO_DRIVE_CAP_2 (*C++ enumerator*), 876
gpio_drive_cap_t::GPIO_DRIVE_CAP_3 (*C++ enumerator*), 877
gpio_drive_cap_t::GPIO_DRIVE_CAP_DEFAULT (*C++ enumerator*), 876
gpio_drive_cap_t::GPIO_DRIVE_CAP_MAX (*C++ enumerator*), 877
gpio_get_drive_capability (*C++ function*), 865
gpio_get_level (*C++ function*), 862
gpio_hold_dis (*C++ function*), 865
gpio_hold_en (*C++ function*), 865
gpio_install_isr_service (*C++ function*), 864
gpio_int_type_t (*C++ enum*), 875
gpio_int_type_t::GPIO_INTR_ANYEDGE (*C++ enumerator*), 875
gpio_int_type_t::GPIO_INTR_DISABLE (*C++ enumerator*), 875
gpio_int_type_t::GPIO_INTR_HIGH_LEVEL (*C++ enumerator*), 875
gpio_int_type_t::GPIO_INTR_LOW_LEVEL (*C++ enumerator*), 875
gpio_int_type_t::GPIO_INTR_MAX (*C++ enumerator*), 875
gpio_int_type_t::GPIO_INTR_NEGEDGE (*C++ enumerator*), 875
gpio_int_type_t::GPIO_INTR_POSEDGE (*C++ enumerator*), 875
gpio_intr_disable (*C++ function*), 862
gpio_intr_enable (*C++ function*), 861
gpio_iomux_in (*C++ function*), 865
gpio_iomux_out (*C++ function*), 866
GPIO_IS_VALID_GPIO (*C macro*), 867
GPIO_IS_VALID_OUTPUT_GPIO (*C macro*), 867
gpio_isr_handle_t (*C++ type*), 867
gpio_isr_handler_add (*C++ function*), 864

gpio_isr_handler_remove (*C++ function*), 864
gpio_isr_register (*C++ function*), 863
gpio_isr_t (*C++ type*), 872
gpio_mode_t (*C++ enum*), 875
gpio_mode_t::GPIO_MODE_DISABLE (*C++ enumerator*), 875
gpio_mode_t::GPIO_MODE_INPUT (*C++ enumerator*), 875
gpio_mode_t::GPIO_MODE_INPUT_OUTPUT (*C++ enumerator*), 875
gpio_mode_t::GPIO_MODE_INPUT_OUTPUT_OD (*C++ enumerator*), 875
gpio_mode_t::GPIO_MODE_OUTPUT (*C++ enumerator*), 875
gpio_mode_t::GPIO_MODE_OUTPUT_OD (*C++ enumerator*), 875
gpio_num_t (*C++ enum*), 872
gpio_num_t::GPIO_NUM_0 (*C++ enumerator*), 872
gpio_num_t::GPIO_NUM_1 (*C++ enumerator*), 872
gpio_num_t::GPIO_NUM_10 (*C++ enumerator*), 873
gpio_num_t::GPIO_NUM_11 (*C++ enumerator*), 873
gpio_num_t::GPIO_NUM_12 (*C++ enumerator*), 873
gpio_num_t::GPIO_NUM_13 (*C++ enumerator*), 873
gpio_num_t::GPIO_NUM_14 (*C++ enumerator*), 873
gpio_num_t::GPIO_NUM_15 (*C++ enumerator*), 873
gpio_num_t::GPIO_NUM_16 (*C++ enumerator*), 873
gpio_num_t::GPIO_NUM_17 (*C++ enumerator*), 873
gpio_num_t::GPIO_NUM_18 (*C++ enumerator*), 873
gpio_num_t::GPIO_NUM_19 (*C++ enumerator*), 873
gpio_num_t::GPIO_NUM_2 (*C++ enumerator*), 872
gpio_num_t::GPIO_NUM_20 (*C++ enumerator*), 873
gpio_num_t::GPIO_NUM_21 (*C++ enumerator*), 873
gpio_num_t::GPIO_NUM_22 (*C++ enumerator*), 874
gpio_num_t::GPIO_NUM_23 (*C++ enumerator*), 874
gpio_num_t::GPIO_NUM_25 (*C++ enumerator*), 874
gpio_num_t::GPIO_NUM_26 (*C++ enumerator*), 874
gpio_num_t::GPIO_NUM_27 (*C++ enumerator*), 874
gpio_num_t::GPIO_NUM_28 (*C++ enumerator*), 874
gpio_num_t::GPIO_NUM_29 (*C++ enumerator*), 874
gpio_num_t::GPIO_NUM_3 (*C++ enumerator*), 872
gpio_num_t::GPIO_NUM_30 (*C++ enumerator*), 874
gpio_num_t::GPIO_NUM_31 (*C++ enumerator*), 874
gpio_num_t::GPIO_NUM_32 (*C++ enumerator*), 874
gpio_num_t::GPIO_NUM_33 (*C++ enumerator*), 874
gpio_num_t::GPIO_NUM_34 (*C++ enumerator*), 874
gpio_num_t::GPIO_NUM_35 (*C++ enumerator*), 874
gpio_num_t::GPIO_NUM_36 (*C++ enumerator*), 874
gpio_num_t::GPIO_NUM_37 (*C++ enumerator*), 874
gpio_num_t::GPIO_NUM_38 (*C++ enumerator*), 874
gpio_num_t::GPIO_NUM_39 (*C++ enumerator*), 875
gpio_num_t::GPIO_NUM_4 (*C++ enumerator*), 872
gpio_num_t::GPIO_NUM_5 (*C++ enumerator*), 872
gpio_num_t::GPIO_NUM_6 (*C++ enumerator*), 873
gpio_num_t::GPIO_NUM_7 (*C++ enumerator*), 873
gpio_num_t::GPIO_NUM_8 (*C++ enumerator*), 873
gpio_num_t::GPIO_NUM_9 (*C++ enumerator*), 873
gpio_num_t::GPIO_NUM_MAX (*C++ enumerator*), 875
gpio_num_t::GPIO_NUM_NC (*C++ enumerator*), 872
GPIO_PIN_COUNT (*C macro*), 866
GPIO_PIN_REG_0 (*C macro*), 870
GPIO_PIN_REG_1 (*C macro*), 870
GPIO_PIN_REG_10 (*C macro*), 870
GPIO_PIN_REG_11 (*C macro*), 870
GPIO_PIN_REG_12 (*C macro*), 870
GPIO_PIN_REG_13 (*C macro*), 870
GPIO_PIN_REG_14 (*C macro*), 870
GPIO_PIN_REG_15 (*C macro*), 870
GPIO_PIN_REG_16 (*C macro*), 870
GPIO_PIN_REG_17 (*C macro*), 870
GPIO_PIN_REG_18 (*C macro*), 870
GPIO_PIN_REG_19 (*C macro*), 870
GPIO_PIN_REG_2 (*C macro*), 870
GPIO_PIN_REG_20 (*C macro*), 871
GPIO_PIN_REG_21 (*C macro*), 871
GPIO_PIN_REG_22 (*C macro*), 871

GPIO_PIN_REG_23 (*C macro*), 871
GPIO_PIN_REG_24 (*C macro*), 871
GPIO_PIN_REG_25 (*C macro*), 871
GPIO_PIN_REG_26 (*C macro*), 871
GPIO_PIN_REG_27 (*C macro*), 871
GPIO_PIN_REG_28 (*C macro*), 871
GPIO_PIN_REG_29 (*C macro*), 871
GPIO_PIN_REG_3 (*C macro*), 870
GPIO_PIN_REG_30 (*C macro*), 871
GPIO_PIN_REG_31 (*C macro*), 871
GPIO_PIN_REG_32 (*C macro*), 871
GPIO_PIN_REG_33 (*C macro*), 871
GPIO_PIN_REG_34 (*C macro*), 871
GPIO_PIN_REG_35 (*C macro*), 871
GPIO_PIN_REG_36 (*C macro*), 871
GPIO_PIN_REG_37 (*C macro*), 871
GPIO_PIN_REG_38 (*C macro*), 871
GPIO_PIN_REG_39 (*C macro*), 871
GPIO_PIN_REG_4 (*C macro*), 870
GPIO_PIN_REG_40 (*C macro*), 871
GPIO_PIN_REG_41 (*C macro*), 871
GPIO_PIN_REG_42 (*C macro*), 871
GPIO_PIN_REG_43 (*C macro*), 872
GPIO_PIN_REG_44 (*C macro*), 872
GPIO_PIN_REG_45 (*C macro*), 872
GPIO_PIN_REG_46 (*C macro*), 872
GPIO_PIN_REG_47 (*C macro*), 872
GPIO_PIN_REG_48 (*C macro*), 872
GPIO_PIN_REG_5 (*C macro*), 870
GPIO_PIN_REG_6 (*C macro*), 870
GPIO_PIN_REG_7 (*C macro*), 870
GPIO_PIN_REG_8 (*C macro*), 870
GPIO_PIN_REG_9 (*C macro*), 870
gpio_port_t (*C++ enum*), 872
gpio_port_t::GPIO_PORT_0 (*C++ enumerator*), 872
gpio_port_t::GPIO_PORT_MAX (*C++ enumerator*), 872
gpio_pull_mode_t (*C++ enum*), 876
gpio_pull_mode_t::GPIO_FLOATING (*C++ enumerator*), 876
gpio_pull_mode_t::GPIO_PULLDOWN_ONLY (*C++ enumerator*), 876
gpio_pull_mode_t::GPIO_PULLUP_ONLY (*C++ enumerator*), 876
gpio_pull_mode_t::GPIO_PULLUP_PULLDOWN (*C++ enumerator*), 876
gpio_pulldown_dis (*C++ function*), 864
gpio_pulldown_en (*C++ function*), 863
gpio_pulldown_t (*C++ enum*), 876
gpio_pulldown_t::GPIO_PULLDOWN_DISABLE (*C++ enumerator*), 876
gpio_pulldown_t::GPIO_PULLDOWN_ENABLE (*C++ enumerator*), 876
gpio_pullup_dis (*C++ function*), 863
gpio_pullup_en (*C++ function*), 863
gpio_pullup_t (*C++ enum*), 876
gpio_pullup_t::GPIO_PULLUP_DISABLE (*C++ enumerator*), 876
gpio_pullup_t::GPIO_PULLUP_ENABLE (*C++ enumerator*), 876
gpio_reset_pin (*C++ function*), 861
GPIO_SEL_0 (*C macro*), 867
GPIO_SEL_1 (*C macro*), 867
GPIO_SEL_10 (*C macro*), 868
GPIO_SEL_11 (*C macro*), 868
GPIO_SEL_12 (*C macro*), 868
GPIO_SEL_13 (*C macro*), 868
GPIO_SEL_14 (*C macro*), 868
GPIO_SEL_15 (*C macro*), 868
GPIO_SEL_16 (*C macro*), 868
GPIO_SEL_17 (*C macro*), 868
GPIO_SEL_18 (*C macro*), 868
GPIO_SEL_19 (*C macro*), 868
GPIO_SEL_2 (*C macro*), 867
GPIO_SEL_20 (*C macro*), 868
GPIO_SEL_21 (*C macro*), 869
GPIO_SEL_22 (*C macro*), 869
GPIO_SEL_23 (*C macro*), 869
GPIO_SEL_25 (*C macro*), 869
GPIO_SEL_26 (*C macro*), 869
GPIO_SEL_27 (*C macro*), 869
GPIO_SEL_28 (*C macro*), 869
GPIO_SEL_29 (*C macro*), 869
GPIO_SEL_3 (*C macro*), 867
GPIO_SEL_30 (*C macro*), 869
GPIO_SEL_31 (*C macro*), 869
GPIO_SEL_32 (*C macro*), 869
GPIO_SEL_33 (*C macro*), 869
GPIO_SEL_34 (*C macro*), 869
GPIO_SEL_35 (*C macro*), 869
GPIO_SEL_36 (*C macro*), 869
GPIO_SEL_37 (*C macro*), 869
GPIO_SEL_38 (*C macro*), 870
GPIO_SEL_39 (*C macro*), 870
GPIO_SEL_4 (*C macro*), 867
GPIO_SEL_5 (*C macro*), 868
GPIO_SEL_6 (*C macro*), 868
GPIO_SEL_7 (*C macro*), 868
GPIO_SEL_8 (*C macro*), 868
GPIO_SEL_9 (*C macro*), 868
gpio_set_direction (*C++ function*), 862
gpio_set_drive_capability (*C++ function*), 864
gpio_set_intr_type (*C++ function*), 861
gpio_set_level (*C++ function*), 862
gpio_set_pull_mode (*C++ function*), 862
gpio_sleep_sel_dis (*C++ function*), 866
gpio_sleep_sel_en (*C++ function*), 866
gpio_sleep_set_direction (*C++ function*), 866
gpio_sleep_set_pull_mode (*C++ function*), 866
gpio_uninstall_isr_service (*C++ function*), 864

gpio_wakeup_disable (*C++ function*), 863
gpio_wakeup_enable (*C++ function*), 863

H

hall_sensor_read (*C++ function*), 832
heap_caps_add_region (*C++ function*), 1645
heap_caps_add_region_with_caps (*C++ function*), 1646
heap_caps_aligned_alloc (*C++ function*), 1640
heap_caps_aligned_calloc (*C++ function*), 1640
heap_caps_aligned_free (*C++ function*), 1640
heap_caps_calloc (*C++ function*), 1641
heap_caps_calloc_prefer (*C++ function*), 1643
heap_caps_check_integrity (*C++ function*), 1642
heap_caps_check_integrity_addr (*C++ function*), 1642
heap_caps_check_integrity_all (*C++ function*), 1642
heap_caps_dump (*C++ function*), 1643
heap_caps_dump_all (*C++ function*), 1643
heap_caps_enable_nonos_stack_heaps (*C++ function*), 1645
heap_caps_free (*C++ function*), 1640
heap_caps_get_allocated_size (*C++ function*), 1644
heap_caps_get_free_size (*C++ function*), 1641
heap_caps_get_info (*C++ function*), 1641
heap_caps_get_largest_free_block (*C++ function*), 1641
heap_caps_get_minimum_free_size (*C++ function*), 1641
heap_caps_get_total_size (*C++ function*), 1641
heap_caps_init (*C++ function*), 1645
heap_caps_malloc (*C++ function*), 1639
heap_caps_malloc_extmem_enable (*C++ function*), 1642
heap_caps_malloc_prefer (*C++ function*), 1643
heap_caps_print_heap_info (*C++ function*), 1642
heap_caps_realloc (*C++ function*), 1640
heap_caps_realloc_prefer (*C++ function*), 1643
heap_caps_register_failed_alloc_callback (*C++ function*), 1639
heap_trace_dump (*C++ function*), 1659
heap_trace_get (*C++ function*), 1659
heap_trace_get_count (*C++ function*), 1659
heap_trace_init_standalone (*C++ function*), 1658
heap_trace_init_tohost (*C++ function*), 1658
heap_trace_mode_t (*C++ enum*), 1660
heap_trace_mode_t::HEAP_TRACE_ALL (*C++ enumerator*), 1660
heap_trace_mode_t::HEAP_TRACE_LEAKS (*C++ enumerator*), 1660
heap_trace_record_t (*C++ struct*), 1659
heap_trace_record_t::address (*C++ member*), 1660
heap_trace_record_t::alloced_by (*C++ member*), 1660
heap_trace_record_t::ccount (*C++ member*), 1660
heap_trace_record_t::freed_by (*C++ member*), 1660
heap_trace_record_t::size (*C++ member*), 1660
heap_trace_resume (*C++ function*), 1659
heap_trace_start (*C++ function*), 1658
heap_trace_stop (*C++ function*), 1659
http_client_init_cb_t (*C++ type*), 1483
http_event_handle_cb (*C++ type*), 1191
HTTPD_200 (*C macro*), 1216
HTTPD_204 (*C macro*), 1216
HTTPD_207 (*C macro*), 1216
HTTPD_400 (*C macro*), 1216
HTTPD_404 (*C macro*), 1216
HTTPD_408 (*C macro*), 1216
HTTPD_500 (*C macro*), 1216
httpd_close_func_t (*C++ type*), 1219
httpd_config (*C++ struct*), 1212
httpd_config::backlog_conn (*C++ member*), 1213
httpd_config::close_fn (*C++ member*), 1214
httpd_config::core_id (*C++ member*), 1212
httpd_config::ctrl_port (*C++ member*), 1212
httpd_config::enable_so_linger (*C++ member*), 1213
httpd_config::global_transport_ctx (*C++ member*), 1213
httpd_config::global_transport_ctx_free_fn (*C++ member*), 1213
httpd_config::global_user_ctx (*C++ member*), 1213
httpd_config::global_user_ctx_free_fn (*C++ member*), 1213
httpd_config::linger_timeout (*C++ member*), 1213
httpd_config::lru_purge_enable (*C++ member*), 1213
httpd_config::max_open_sockets (*C++ member*), 1212
httpd_config::max_resp_headers (*C++ member*), 1213
httpd_config::max_uri_handlers (*C++ member*), 1213
httpd_config::open_fn (*C++ member*), 1213
httpd_config::recv_wait_timeout (*C++ member*), 1213

httpd_config::send_wait_timeout (C++ member), 1213
httpd_config::server_port (C++ member), 1212
httpd_config::stack_size (C++ member), 1212
httpd_config::task_priority (C++ member), 1212
httpd_config::uri_match_fn (C++ member), 1214
httpd_config_t (C++ type), 1219
HTTPD_DEFAULT_CONFIG (C macro), 1216
httpd_err_code_t (C++ enum), 1220
httpd_err_code_t::HTTPD_400_BAD_REQUEST (C++ enumerator), 1220
httpd_err_code_t::HTTPD_401_UNAUTHORIZED (C++ enumerator), 1220
httpd_err_code_t::HTTPD_403_FORBIDDEN (C++ enumerator), 1220
httpd_err_code_t::HTTPD_404_NOT_FOUND (C++ enumerator), 1220
httpd_err_code_t::HTTPD_405_METHOD_NOT_ALLOWED (C++ enumerator), 1220
httpd_err_code_t::HTTPD_408_REQ_TIMEOUT (C++ enumerator), 1220
httpd_err_code_t::HTTPD_411_LENGTH_REQUIRED (C++ enumerator), 1220
httpd_err_code_t::HTTPD_414_URI_TOO_LONG (C++ enumerator), 1220
httpd_err_code_t::HTTPD_431_REQ_HDR_FIELDS_TOO_LARGE (C++ enumerator), 1220
httpd_err_code_t::HTTPD_500_INTERNAL_SERVER_ERROR (C++ enumerator), 1220
httpd_err_code_t::HTTPD_501_METHOD_NOT_IMPLEMENTED (C++ enumerator), 1220
httpd_err_code_t::HTTPD_505_VERSION_NOT_SUPPORTED (C++ enumerator), 1220
httpd_err_code_t::HTTPD_ERR_CODE_MAX (C++ enumerator), 1220
httpd_err_handler_func_t (C++ type), 1218
httpd_free_ctx_fn_t (C++ type), 1219
httpd_get_client_list (C++ function), 1212
httpd_get_global_transport_ctx (C++ function), 1211
httpd_get_global_user_ctx (C++ function), 1211
httpd_handle_t (C++ type), 1218
HTTPD_MAX_REQ_HDR_LEN (C macro), 1215
HTTPD_MAX_URI_LEN (C macro), 1215
httpd_method_t (C++ type), 1219
httpd_open_func_t (C++ type), 1219
httpd_pending_func_t (C++ type), 1218
httpd_query_key_value (C++ function), 1202
httpd_queue_work (C++ function), 1210
httpd_recv_func_t (C++ type), 1217
httpd_register_err_handler (C++ function), 1208
httpd_register_uri_handler (C++ function), 1197
httpd_req (C++ struct), 1214
httpd_req::aux (C++ member), 1214
httpd_req::content_len (C++ member), 1214
httpd_req::free_ctx (C++ member), 1215
httpd_req::handle (C++ member), 1214
httpd_req::ignore_sess_ctx_changes (C++ member), 1215
httpd_req::method (C++ member), 1214
httpd_req::sess_ctx (C++ member), 1214
httpd_req::uri (C++ member), 1214
httpd_req::user_ctx (C++ member), 1214
httpd_req_get_cookie_val (C++ function), 1202
httpd_req_get_hdr_value_len (C++ function), 1200
httpd_req_get_hdr_value_str (C++ function), 1201
httpd_req_get_url_query_len (C++ function), 1201
httpd_req_get_url_query_str (C++ function), 1201
httpd_req_recv (C++ function), 1200
httpd_req_t (C++ type), 1217
httpd_req_to_sockfd (C++ function), 1199
httpd_resp_send (C++ function), 1203
httpd_resp_send_404 (C++ function), 1206
httpd_resp_send_408 (C++ function), 1206
httpd_resp_send_500 (C++ function), 1207
httpd_resp_send_chunk (C++ function), 1203
httpd_resp_send_err (C++ function), 1206
httpd_resp_sendstr (C++ function), 1204
httpd_resp_sendstr_chunk (C++ function), 1204
httpd_resp_set_hdr (C++ function), 1205
httpd_resp_set_status (C++ function), 1204
httpd_resp_set_type (C++ function), 1205
HTTPD_RESP_USE_STRLEN (C macro), 1217
httpd_send (C++ function), 1207
httpd_send_func_t (C++ type), 1217
httpd_sess_get_ctx (C++ function), 1210
httpd_sess_get_transport_ctx (C++ function), 1210
httpd_sess_set_ctx (C++ function), 1210
httpd_sess_set_pending_override (C++ function), 1199
httpd_sess_set_recv_override (C++ function), 1198
httpd_sess_set_send_override (C++ function), 1199
httpd_sess_set_transport_ctx (C++ function), 1211
httpd_sess_trigger_close (C++ function), 1211
httpd_sess_update_lru_counter (C++ function), 1211
HTTPD_SOCK_ERR_FAIL (C macro), 1215
HTTPD_SOCK_ERR_INVALID (C macro), 1216

HTTPD_SOCK_ERR_TIMEOUT (*C macro*), 1216
httpd_socket_recv (*C++ function*), 1208
httpd_socket_send (*C++ function*), 1208
httpd_ssl_config (*C++ struct*), 1221
httpd_ssl_config::cacert_len (*C++ member*), 1222
httpd_ssl_config::cacert_pem (*C++ member*), 1222
httpd_ssl_config::client_verify_cert_len (*C++ member*), 1222
httpd_ssl_config::client_verify_cert_pem (*C++ member*), 1222
httpd_ssl_config::httpd (*C++ member*), 1222
httpd_ssl_config::port_insecure (*C++ member*), 1222
httpd_ssl_config::port_secure (*C++ member*), 1222
httpd_ssl_config::prvtkey_len (*C++ member*), 1222
httpd_ssl_config::prvtkey_pem (*C++ member*), 1222
httpd_ssl_config::session_tickets (*C++ member*), 1222
httpd_ssl_config::transport_mode (*C++ member*), 1222
httpd_ssl_config::user_cb (*C++ member*), 1222
HTTPD_SSL_CONFIG_DEFAULT (*C macro*), 1223
httpd_ssl_config_t (*C++ type*), 1223
httpd_ssl_start (*C++ function*), 1221
httpd_ssl_stop (*C++ function*), 1221
httpd_ssl_transport_mode_t (*C++ enum*), 1223
httpd_ssl_transport_mode_t::HTTPD_SSL_TRANSPORT_INSECURE (*C++ enumerator*), 1223
httpd_ssl_transport_mode_t::HTTPD_SSL_TRANSPORT_SECURE (*C++ enumerator*), 1223
httpd_start (*C++ function*), 1209
httpd_stop (*C++ function*), 1209
HTTPD_TYPE_JSON (*C macro*), 1216
HTTPD_TYPE_OCTET (*C macro*), 1216
HTTPD_TYPE_TEXT (*C macro*), 1216
httpd_unregister_uri (*C++ function*), 1198
httpd_unregister_uri_handler (*C++ function*), 1198
httpd_uri (*C++ struct*), 1215
httpd_uri::handler (*C++ member*), 1215
httpd_uri::method (*C++ member*), 1215
httpd_uri::uri (*C++ member*), 1215
httpd_uri::user_ctx (*C++ member*), 1215
httpd_uri_match_func_t (*C++ type*), 1219
httpd_uri_match_wildcard (*C++ function*), 1202
httpd_uri_t (*C++ type*), 1217
httpd_work_fn_t (*C++ type*), 1219
HttpStatus_Code (*C++ enum*), 1194
HttpStatus_Code::HttpStatus_BadRequest (*C++ enumerator*), 1194
HttpStatus_Code::HttpStatus_Forbidden (*C++ enumerator*), 1194
HttpStatus_Code::HttpStatus_Found (*C++ enumerator*), 1194
HttpStatus_Code::HttpStatus_InternalError (*C++ enumerator*), 1194
HttpStatus_Code::HttpStatus_MovedPermanently (*C++ enumerator*), 1194
HttpStatus_Code::HttpStatus_MultipleChoices (*C++ enumerator*), 1194
HttpStatus_Code::HttpStatus_NotFound (*C++ enumerator*), 1194
HttpStatus_Code::HttpStatus_Ok (*C++ enumerator*), 1194
HttpStatus_Code::HttpStatus_PermanentRedirect (*C++ enumerator*), 1194
HttpStatus_Code::HttpStatus_SeeOther (*C++ enumerator*), 1194
HttpStatus_Code::HttpStatus_TemporaryRedirect (*C++ enumerator*), 1194
HttpStatus_Code::HttpStatus_Unauthorized (*C++ enumerator*), 1194

I

i2c_ack_type_t (*C++ enum*), 897
i2c_ack_type_t::I2C_MASTER_ACK (*C++ enumerator*), 897
i2c_ack_type_t::I2C_MASTER_ACK_MAX (*C++ enumerator*), 898
i2c_ack_type_t::I2C_MASTER_LAST_NACK (*C++ enumerator*), 898
i2c_ack_type_t::I2C_MASTER_NACK (*C++ enumerator*), 897
i2c_addr_mode_t (*C++ enum*), 897
i2c_addr_mode_t::I2C_ADDR_BIT_10 (*C++ enumerator*), 897
i2c_addr_mode_t::I2C_ADDR_BIT_7 (*C++ enumerator*), 897
i2c_addr_mode_t::I2C_ADDR_BIT_MAX (*C++ enumerator*), 897
I2C_APB_CLK_FREQ (*C macro*), 895
I2C_CLK_FREQ_MAX (*C macro*), 896
i2c_cmd_handle_t (*C++ type*), 896
i2c_cmd_link_create (*C++ function*), 889
i2c_cmd_link_create_static (*C++ function*), 889
i2c_cmd_link_delete (*C++ function*), 889
i2c_cmd_link_delete_static (*C++ function*), 889
i2c_config_t (*C++ struct*), 895
i2c_config_t::addr_10bit_en (*C++ member*), 895
i2c_config_t::clk_flags (*C++ member*), 895
i2c_config_t::clk_speed (*C++ member*), 895
i2c_config_t::master (*C++ member*), 895
i2c_config_t::maximum_speed (*C++ member*), 895

i2c_config_t::mode (C++ member), 895
i2c_config_t::scl_io_num (C++ member), 895
i2c_config_t::scl_pullup_en (C++ member), 895
i2c_config_t::sda_io_num (C++ member), 895
i2c_config_t::sda_pullup_en (C++ member), 895
i2c_config_t::slave (C++ member), 895
i2c_config_t::slave_addr (C++ member), 895
i2c_driver_delete (C++ function), 887
i2c_driver_install (C++ function), 886
i2c_filter_disable (C++ function), 893
i2c_filter_enable (C++ function), 892
i2c_get_data_mode (C++ function), 894
i2c_get_data_timing (C++ function), 894
i2c_get_period (C++ function), 892
i2c_get_start_timing (C++ function), 893
i2c_get_stop_timing (C++ function), 893
i2c_get_timeout (C++ function), 894
I2C_INTERNAL_STRUCT_SIZE (C macro), 896
i2c_isr_free (C++ function), 888
i2c_isr_register (C++ function), 887
I2C_LINK_RECOMMENDED_SIZE (C macro), 896
i2c_master_cmd_begin (C++ function), 891
i2c_master_read (C++ function), 890
i2c_master_read_byte (C++ function), 890
i2c_master_read_from_device (C++ function), 888
i2c_master_start (C++ function), 890
i2c_master_stop (C++ function), 891
i2c_master_write (C++ function), 890
i2c_master_write_byte (C++ function), 890
i2c_master_write_read_device (C++ function), 889
i2c_master_write_to_device (C++ function), 888
i2c_mode_t (C++ enum), 897
i2c_mode_t::I2C_MODE_MASTER (C++ enumerator), 897
i2c_mode_t::I2C_MODE_MAX (C++ enumerator), 897
i2c_mode_t::I2C_MODE_SLAVE (C++ enumerator), 897
I2C_NUM_0 (C macro), 896
I2C_NUM_1 (C macro), 896
I2C_NUM_MAX (C macro), 895
i2c_opmode_t (C++ enum), 898
i2c_opmode_t::I2C_CMD_END (C++ enumerator), 898
i2c_opmode_t::I2C_CMD_READ (C++ enumerator), 898
i2c_opmode_t::I2C_CMD_RESTART (C++ enumerator), 898
i2c_opmode_t::I2C_CMD_STOP (C++ enumerator), 898
i2c_opmode_t::I2C_CMD_WRITE (C++ enumerator), 898
i2c_param_config (C++ function), 887
i2c_port_t (C++ type), 896
i2c_reset_rx_fifo (C++ function), 887
i2c_reset_tx_fifo (C++ function), 887
i2c_rw_t (C++ enum), 897
i2c_rw_t::I2C_MASTER_READ (C++ enumerator), 897
i2c_rw_t::I2C_MASTER_WRITE (C++ enumerator), 897
I2C_SCLK_SRC_FLAG_AWARE_DFS (C macro), 896
I2C_SCLK_SRC_FLAG_FOR_NOMAL (C macro), 896
I2C_SCLK_SRC_FLAG_LIGHT_SLEEP (C macro), 896
i2c_sclk_t (C++ enum), 898
i2c_sclk_t::I2C_SCLK_APB (C++ enumerator), 898
i2c_sclk_t::I2C_SCLK_DEFAULT (C++ enumerator), 898
i2c_sclk_t::I2C_SCLK_MAX (C++ enumerator), 898
i2c_set_data_mode (C++ function), 894
i2c_set_data_timing (C++ function), 893
i2c_set_period (C++ function), 892
i2c_set_pin (C++ function), 888
i2c_set_start_timing (C++ function), 893
i2c_set_stop_timing (C++ function), 893
i2c_set_timeout (C++ function), 894
i2c_slave_read_buffer (C++ function), 892
i2c_slave_write_buffer (C++ function), 891
i2c_trans_mode_t (C++ enum), 897
i2c_trans_mode_t::I2C_DATA_MODE_LSB_FIRST (C++ enumerator), 897
i2c_trans_mode_t::I2C_DATA_MODE_MAX (C++ enumerator), 897
i2c_trans_mode_t::I2C_DATA_MODE_MSB_FIRST (C++ enumerator), 897
i2s_adc_disable (C++ function), 907
i2s_adc_enable (C++ function), 907
i2s_bits_per_chan_t (C++ enum), 911
i2s_bits_per_chan_t::I2S_BITS_PER_CHAN_16BIT (C++ enumerator), 911
i2s_bits_per_chan_t::I2S_BITS_PER_CHAN_24BIT (C++ enumerator), 911
i2s_bits_per_chan_t::I2S_BITS_PER_CHAN_32BIT (C++ enumerator), 912
i2s_bits_per_chan_t::I2S_BITS_PER_CHAN_8BIT (C++ enumerator), 911
i2s_bits_per_chan_t::I2S_BITS_PER_CHAN_DEFAULT (C++ enumerator), 911
i2s_bits_per_sample_t (C++ enum), 911
i2s_bits_per_sample_t::I2S_BITS_PER_SAMPLE_16BIT (C++ enumerator), 911
i2s_bits_per_sample_t::I2S_BITS_PER_SAMPLE_24BIT (C++ enumerator), 911

i2s_bits_per_sample_t::I2S_BITS_PER_SAMPLE_8BIT (C++ enumerator), 911
i2s_bits_per_sample_t::I2S_BITS_PER_SAMPLE_16BIT (C++ enumerator), 911
i2s_channel_fmt_t (C++ enum), 913
i2s_channel_fmt_t::I2S_CHANNEL_FMT_ALL_LEFT (C++ enumerator), 913
i2s_channel_fmt_t::I2S_CHANNEL_FMT_ALL_RIGHT (C++ enumerator), 913
i2s_channel_fmt_t::I2S_CHANNEL_FMT_ONLY_LEFT (C++ enumerator), 913
i2s_channel_fmt_t::I2S_CHANNEL_FMT_ONLY_RIGHT (C++ enumerator), 913
i2s_channel_fmt_t::I2S_CHANNEL_FMT_RIGHT_LEFT (C++ enumerator), 913
i2s_channel_t (C++ enum), 912
i2s_channel_t::I2S_CHANNEL_MONO (C++ enumerator), 912
i2s_channel_t::I2S_CHANNEL_STEREO (C++ enumerator), 912
i2s_clock_src_t (C++ enum), 914
i2s_clock_src_t::I2S_CLK_APLL (C++ enumerator), 914
i2s_clock_src_t::I2S_CLK_D2CLK (C++ enumerator), 914
i2s_comm_format_t (C++ enum), 912
i2s_comm_format_t::I2S_COMM_FORMAT_I2S (C++ enumerator), 912
i2s_comm_format_t::I2S_COMM_FORMAT_I2S_LSB (C++ enumerator), 912
i2s_comm_format_t::I2S_COMM_FORMAT_I2S_MSB (C++ enumerator), 912
i2s_comm_format_t::I2S_COMM_FORMAT_PCM (C++ enumerator), 912
i2s_comm_format_t::I2S_COMM_FORMAT_PCM_LONG (C++ enumerator), 913
i2s_comm_format_t::I2S_COMM_FORMAT_PCM_SHORT (C++ enumerator), 913
i2s_comm_format_t::I2S_COMM_FORMAT_STAND_I2S (C++ enumerator), 912
i2s_comm_format_t::I2S_COMM_FORMAT_STAND_MAX (C++ enumerator), 912
i2s_comm_format_t::I2S_COMM_FORMAT_STAND_MSB (C++ enumerator), 912
i2s_comm_format_t::I2S_COMM_FORMAT_STAND_PCM_LONG (C++ enumerator), 912
i2s_comm_format_t::I2S_COMM_FORMAT_STAND_PCM_SHORT (C++ enumerator), 912
i2s_config_t (C++ type), 910
i2s_dac_mode_t (C++ enum), 914
i2s_dac_mode_t::I2S_DAC_CHANNEL_BOTH_EN (C++ enumerator), 914
i2s_dac_mode_t::I2S_DAC_CHANNEL_DISABLE (C++ enumerator), 914
i2s_dac_mode_t::I2S_DAC_CHANNEL_LEFT_EN (C++ enumerator), 914
i2s_dac_mode_t::I2S_DAC_CHANNEL_MAX (C++ enumerator), 915
i2s_dac_mode_t::I2S_DAC_CHANNEL_RIGHT_EN (C++ enumerator), 914
i2s_driver_config_t (C++ struct), 908
i2s_driver_config_t::bits_per_chan (C++ member), 909
i2s_driver_config_t::bits_per_sample (C++ member), 909
i2s_driver_config_t::channel_format (C++ member), 909
i2s_driver_config_t::communication_format (C++ member), 909
i2s_driver_config_t::dma_buf_count (C++ member), 909
i2s_driver_config_t::dma_buf_len (C++ member), 909
i2s_driver_config_t::fixed_mclk (C++ member), 909
i2s_driver_config_t::intr_alloc_flags (C++ member), 909
i2s_driver_config_t::mclk_multiple (C++ member), 909
i2s_driver_config_t::mode (C++ member), 908
i2s_driver_config_t::sample_rate (C++ member), 909
i2s_driver_config_t::tx_desc_auto_clear (C++ member), 909
i2s_driver_config_t::use_apll (C++ member), 909
i2s_driver_install (C++ function), 904
i2s_driver_uninstall (C++ function), 904
i2s_event_t (C++ struct), 910
i2s_event_t::size (C++ member), 910
i2s_event_t::type (C++ member), 910
i2s_event_type_t (C++ enum), 910
i2s_event_type_t::I2S_EVENT_DMA_ERROR (C++ enumerator), 910
i2s_event_type_t::I2S_EVENT_MAX (C++ enumerator), 911
i2s_event_type_t::I2S_EVENT_RX_DONE (C++ enumerator), 911
i2s_event_type_t::I2S_EVENT_RX_Q_OVF (C++ enumerator), 911
i2s_event_type_t::I2S_EVENT_TX_DONE (C++ enumerator), 910
i2s_event_type_t::I2S_EVENT_TX_Q_OVF (C++ enumerator), 911
i2s_get_clk (C++ function), 906
i2s_isr_handle_t (C++ type), 910
i2s_mclk_multiple_t (C++ enum), 914
i2s_mclk_multiple_t::I2S_MCLK_MULTIPLE_128 (C++ enumerator), 914
i2s_mclk_multiple_t::I2S_MCLK_MULTIPLE_256 (C++ enumerator), 914
i2s_mclk_multiple_t::I2S_MCLK_MULTIPLE_384 (C++ enumerator), 914
i2s_mclk_multiple_t::I2S_MCLK_MULTIPLE_DEFAULT (C++ enumerator), 914

i2s_mode_t (*C++ enum*), 913
i2s_mode_t::I2S_MODE_ADC_BUILT_IN (*C++ enumerator*), 913
i2s_mode_t::I2S_MODE_DAC_BUILT_IN (*C++ enumerator*), 913
i2s_mode_t::I2S_MODE_MASTER (*C++ enumerator*), 913
i2s_mode_t::I2S_MODE_PDM (*C++ enumerator*), 914
i2s_mode_t::I2S_MODE_RX (*C++ enumerator*), 913
i2s_mode_t::I2S_MODE_SLAVE (*C++ enumerator*), 913
i2s_mode_t::I2S_MODE_TX (*C++ enumerator*), 913
I2S_PDM_DEFAULT_UPSAMPLE_CONFIG (*C macro*), 910
i2s_pdm_dsr_t (*C++ enum*), 915
i2s_pdm_dsr_t::I2S_PDM_DSR_16S (*C++ enumerator*), 915
i2s_pdm_dsr_t::I2S_PDM_DSR_8S (*C++ enumerator*), 915
i2s_pdm_dsr_t::I2S_PDM_DSR_MAX (*C++ enumerator*), 915
i2s_pdm_sig_scale_t (*C++ enum*), 915
i2s_pdm_sig_scale_t::I2S_PDM_SIG_SCALING_DIV_2 (*C++ enumerator*), 915
i2s_pdm_sig_scale_t::I2S_PDM_SIG_SCALING_MUL_1 (*C++ enumerator*), 915
i2s_pdm_sig_scale_t::I2S_PDM_SIG_SCALING_MUL_2 (*C++ enumerator*), 915
i2s_pdm_sig_scale_t::I2S_PDM_SIG_SCALING_MUL_4 (*C++ enumerator*), 915
i2s_pdm_tx_upsample_cfg_t (*C++ struct*), 908
i2s_pdm_tx_upsample_cfg_t::fp (*C++ member*), 908
i2s_pdm_tx_upsample_cfg_t::fs (*C++ member*), 908
i2s_pdm_tx_upsample_cfg_t::sample_rate (*C++ member*), 908
i2s_pin_config_t (*C++ struct*), 908
i2s_pin_config_t::bck_io_num (*C++ member*), 908
i2s_pin_config_t::data_in_num (*C++ member*), 908
i2s_pin_config_t::data_out_num (*C++ member*), 908
i2s_pin_config_t::mck_io_num (*C++ member*), 908
i2s_pin_config_t::ws_io_num (*C++ member*), 908
I2S_PIN_NO_CHANGE (*C macro*), 910
i2s_port_t (*C++ enum*), 910
i2s_port_t::I2S_NUM_0 (*C++ enumerator*), 910
i2s_port_t::I2S_NUM_1 (*C++ enumerator*), 910
i2s_port_t::I2S_NUM_MAX (*C++ enumerator*), 910
i2s_read (*C++ function*), 905
i2s_set_adc_mode (*C++ function*), 907
i2s_set_clk (*C++ function*), 906
i2s_set_dac_mode (*C++ function*), 907
i2s_set_pdm_rx_down_sample (*C++ function*), 903
i2s_set_pdm_tx_up_sample (*C++ function*), 904
i2s_set_pin (*C++ function*), 903
i2s_set_sample_rates (*C++ function*), 905
i2s_start (*C++ function*), 906
i2s_stop (*C++ function*), 906
i2s_write (*C++ function*), 904
i2s_write_expand (*C++ function*), 905
i2s_zero_dma_buffer (*C++ function*), 906
I_ADC (*C macro*), 2325
I_ADDI (*C macro*), 2326
I_ADDR (*C macro*), 2326
I_ANDI (*C macro*), 2326
I_ANDR (*C macro*), 2326
I_BGE (*C macro*), 2325
I_BL (*C macro*), 2325
I_BXFI (*C macro*), 2326
I_BXFR (*C macro*), 2325
I_BXI (*C macro*), 2325
I_BXR (*C macro*), 2325
I_BXZI (*C macro*), 2325
I_BXZR (*C macro*), 2325
I_DELAY (*C macro*), 2324
I_END (*C macro*), 2324
I_HALT (*C macro*), 2324
I_I2C_READ (*C macro*), 2328
I_I2C_RW (*C macro*), 2328
I_I2C_WRITE (*C macro*), 2328
I_JUMPS (*C macro*), 2328
I_LD (*C macro*), 2325
I_LSHI (*C macro*), 2326
I_LSHR (*C macro*), 2326
I_MOVI (*C macro*), 2326
I_MOVR (*C macro*), 2326
I_ORI (*C macro*), 2326
I_ORR (*C macro*), 2326
I_RD_REG (*C macro*), 2324
I_RSHI (*C macro*), 2326
I_RSHR (*C macro*), 2326
I_SLEEP_CYCLE_SEL (*C macro*), 2324
I_ST (*C macro*), 2325
I_STAGE_DEC (*C macro*), 2327
I_STAGE_INC (*C macro*), 2327
I_STAGE_RST (*C macro*), 2327
I_SUBI (*C macro*), 2326
I_SUBR (*C macro*), 2326
I_TSENS (*C macro*), 2325
I_WAKE (*C macro*), 2324
I_WR_REG (*C macro*), 2324
I_WR_REG_BIT (*C macro*), 2324
iface_destroy (*C++ type*), 1265
iface_init (*C++ type*), 1265
iface_setup (*C++ type*), 1265

iface_start (*C++ type*), 1265
intr_handle_data_t (*C++ type*), 1681
intr_handle_t (*C++ type*), 1681
intr_handler_t (*C++ type*), 1681

J

JUMPS_GE (*C macro*), 2323
JUMPS_LE (*C macro*), 2323
JUMPS_LT (*C macro*), 2323

L

lcd_clock_source_t (*C++ enum*), 916
lcd_clock_source_t::LCD_CLK_SRC_APLL (*C++ enumerator*), 916
lcd_clock_source_t::LCD_CLK_SRC_PLL160M (*C++ enumerator*), 916
lcd_clock_source_t::LCD_CLK_SRC_PLL240M (*C++ enumerator*), 916
lcd_clock_source_t::LCD_CLK_SRC_XTAL (*C++ enumerator*), 916
lcd_color_range_t (*C++ enum*), 917
lcd_color_range_t::LCD_COLOR_RANGE_FULL (*C++ enumerator*), 917
lcd_color_range_t::LCD_COLOR_RANGE_LIMIT (*C++ enumerator*), 917
lcd_color_space_t (*C++ enum*), 916
lcd_color_space_t::LCD_COLOR_SPACE_RGB (*C++ enumerator*), 916
lcd_color_space_t::LCD_COLOR_SPACE_YUV (*C++ enumerator*), 916
lcd_yuv_conv_std_t (*C++ enum*), 917
lcd_yuv_conv_std_t::LCD_YUV_CONV_STD_BT601 (*C++ enumerator*), 917
lcd_yuv_conv_std_t::LCD_YUV_CONV_STD_BT709 (*C++ enumerator*), 917
lcd_yuv_sample_t (*C++ enum*), 917
lcd_yuv_sample_t::LCD_YUV_SAMPLE_411 (*C++ enumerator*), 917
lcd_yuv_sample_t::LCD_YUV_SAMPLE_420 (*C++ enumerator*), 917
lcd_yuv_sample_t::LCD_YUV_SAMPLE_422 (*C++ enumerator*), 917
LEDC_APB_CLK_HZ (*C macro*), 941
ledc_bind_channel_timer (*C++ function*), 935
ledc_cb_event_t (*C++ enum*), 941
ledc_cb_event_t::LEDC_FADE_END_EVT (*C++ enumerator*), 941
ledc_cb_param_t (*C++ struct*), 940
ledc_cb_param_t::channel (*C++ member*), 940
ledc_cb_param_t::duty (*C++ member*), 941
ledc_cb_param_t::event (*C++ member*), 940
ledc_cb_param_t::speed_mode (*C++ member*), 940
ledc_cb_register (*C++ function*), 939
ledc_cb_t (*C++ type*), 941
ledc_cbs_t (*C++ struct*), 941
ledc_cbs_t::fade_cb (*C++ member*), 941
ledc_channel_config (*C++ function*), 931
ledc_channel_config_t (*C++ struct*), 939
ledc_channel_config_t::channel (*C++ member*), 939
ledc_channel_config_t::duty (*C++ member*), 939
ledc_channel_config_t::flags (*C++ member*), 940
ledc_channel_config_t::gpio_num (*C++ member*), 939
ledc_channel_config_t::hpoint (*C++ member*), 939
ledc_channel_config_t::intr_type (*C++ member*), 939
ledc_channel_config_t::output_invert (*C++ member*), 940
ledc_channel_config_t::speed_mode (*C++ member*), 939
ledc_channel_config_t::timer_sel (*C++ member*), 939
ledc_channel_t (*C++ enum*), 943
ledc_channel_t::LEDC_CHANNEL_0 (*C++ enumerator*), 943
ledc_channel_t::LEDC_CHANNEL_1 (*C++ enumerator*), 943
ledc_channel_t::LEDC_CHANNEL_2 (*C++ enumerator*), 944
ledc_channel_t::LEDC_CHANNEL_3 (*C++ enumerator*), 944
ledc_channel_t::LEDC_CHANNEL_4 (*C++ enumerator*), 944
ledc_channel_t::LEDC_CHANNEL_5 (*C++ enumerator*), 944
ledc_channel_t::LEDC_CHANNEL_6 (*C++ enumerator*), 944
ledc_channel_t::LEDC_CHANNEL_7 (*C++ enumerator*), 944
ledc_channel_t::LEDC_CHANNEL_MAX (*C++ enumerator*), 944
ledc_clk_cfg_t (*C++ enum*), 942
ledc_clk_cfg_t::LEDC_AUTO_CLK (*C++ enumerator*), 942
ledc_clk_cfg_t::LEDC_USE_APB_CLK (*C++ enumerator*), 943
ledc_clk_cfg_t::LEDC_USE_REF_TICK (*C++ enumerator*), 943
ledc_clk_cfg_t::LEDC_USE_RTC8M_CLK (*C++ enumerator*), 943
ledc_clk_src_t (*C++ enum*), 943
ledc_clk_src_t::LEDC_APB_CLK (*C++ enumerator*), 943
ledc_clk_src_t::LEDC_REF_TICK (*C++ enumerator*), 943
ledc_clk_src_t::LEDC_SCLK (*C++ enumerator*), 943
ledc_duty_direction_t (*C++ enum*), 942
ledc_duty_direction_t::LEDC_DUTY_DIR_DECREASE (*C++ enumerator*), 942

ledc_duty_direction_t::LEDC_DUTY_DIR_INCREASE (C++ enumerator), 942
ledc_duty_direction_t::LEDC_DUTY_DIR_MAX (C++ enumerator), 942
LEDC_ERR_DUTY (C macro), 941
LEDC_ERR_VAL (C macro), 941
ledc_fade_func_install (C++ function), 937
ledc_fade_func_uninstall (C++ function), 937
ledc_fade_mode_t (C++ enum), 945
ledc_fade_mode_t::LEDC_FADE_MAX (C++ enumerator), 945
ledc_fade_mode_t::LEDC_FADE_NO_WAIT (C++ enumerator), 945
ledc_fade_mode_t::LEDC_FADE_WAIT_DONE (C++ enumerator), 945
ledc_fade_start (C++ function), 937
ledc_get_duty (C++ function), 934
ledc_get_freq (C++ function), 932
ledc_get_hpoint (C++ function), 933
ledc_intr_type_t (C++ enum), 942
ledc_intr_type_t::LEDC_INTR_DISABLE (C++ enumerator), 942
ledc_intr_type_t::LEDC_INTR_FADE_END (C++ enumerator), 942
ledc_intr_type_t::LEDC_INTR_MAX (C++ enumerator), 942
ledc_isr_handle_t (C++ type), 941
ledc_isr_register (C++ function), 934
ledc_mode_t (C++ enum), 942
ledc_mode_t::LEDC_HIGH_SPEED_MODE (C++ enumerator), 942
ledc_mode_t::LEDC_LOW_SPEED_MODE (C++ enumerator), 942
ledc_mode_t::LEDC_SPEED_MODE_MAX (C++ enumerator), 942
LEDC_REF_CLK_HZ (C macro), 941
ledc_set_duty (C++ function), 933
ledc_set_duty_and_update (C++ function), 937
ledc_set_duty_with_hpoint (C++ function), 933
ledc_set_fade (C++ function), 934
ledc_set_fade_step_and_start (C++ function), 938
ledc_set_fade_time_and_start (C++ function), 938
ledc_set_fade_with_step (C++ function), 936
ledc_set_fade_with_time (C++ function), 936
ledc_set_freq (C++ function), 932
ledc_set_pin (C++ function), 932
ledc_slow_clk_sel_t (C++ enum), 942
ledc_slow_clk_sel_t::LEDC_SLOW_CLK_APB (C++ enumerator), 942
ledc_slow_clk_sel_t::LEDC_SLOW_CLK_RTC8M (C++ enumerator), 942
ledc_stop (C++ function), 932
ledc_timer_bit_t (C++ enum), 944
ledc_timer_bit_t::LEDC_TIMER_10_BIT (C++ enumerator), 945
ledc_timer_bit_t::LEDC_TIMER_11_BIT (C++ enumerator), 945
ledc_timer_bit_t::LEDC_TIMER_12_BIT (C++ enumerator), 945
ledc_timer_bit_t::LEDC_TIMER_13_BIT (C++ enumerator), 945
ledc_timer_bit_t::LEDC_TIMER_14_BIT (C++ enumerator), 945
ledc_timer_bit_t::LEDC_TIMER_15_BIT (C++ enumerator), 945
ledc_timer_bit_t::LEDC_TIMER_16_BIT (C++ enumerator), 945
ledc_timer_bit_t::LEDC_TIMER_17_BIT (C++ enumerator), 945
ledc_timer_bit_t::LEDC_TIMER_18_BIT (C++ enumerator), 945
ledc_timer_bit_t::LEDC_TIMER_19_BIT (C++ enumerator), 945
ledc_timer_bit_t::LEDC_TIMER_1_BIT (C++ enumerator), 944
ledc_timer_bit_t::LEDC_TIMER_20_BIT (C++ enumerator), 945
ledc_timer_bit_t::LEDC_TIMER_2_BIT (C++ enumerator), 944
ledc_timer_bit_t::LEDC_TIMER_3_BIT (C++ enumerator), 944
ledc_timer_bit_t::LEDC_TIMER_4_BIT (C++ enumerator), 944
ledc_timer_bit_t::LEDC_TIMER_5_BIT (C++ enumerator), 944
ledc_timer_bit_t::LEDC_TIMER_6_BIT (C++ enumerator), 944
ledc_timer_bit_t::LEDC_TIMER_7_BIT (C++ enumerator), 944
ledc_timer_bit_t::LEDC_TIMER_8_BIT (C++ enumerator), 944
ledc_timer_bit_t::LEDC_TIMER_9_BIT (C++ enumerator), 944
ledc_timer_bit_t::LEDC_TIMER_BIT_MAX (C++ enumerator), 945
ledc_timer_config (C++ function), 931
ledc_timer_config_t (C++ struct), 940
ledc_timer_config_t::bit_num (C++ member), 940
ledc_timer_config_t::clk_cfg (C++ member), 940
ledc_timer_config_t::duty_resolution (C++ member), 940
ledc_timer_config_t::freq_hz (C++ member), 940
ledc_timer_config_t::speed_mode (C++ member), 940
ledc_timer_config_t::timer_num (C++ member), 940
ledc_timer_pause (C++ function), 935
ledc_timer_resume (C++ function), 935

ledc_timer_rst (*C++ function*), 935
ledc_timer_set (*C++ function*), 935
ledc_timer_t (*C++ enum*), 943
ledc_timer_t::LEDC_TIMER_0 (*C++ enumerator*), 943
ledc_timer_t::LEDC_TIMER_1 (*C++ enumerator*), 943
ledc_timer_t::LEDC_TIMER_2 (*C++ enumerator*), 943
ledc_timer_t::LEDC_TIMER_3 (*C++ enumerator*), 943
ledc_timer_t::LEDC_TIMER_MAX (*C++ enumerator*), 943
ledc_update_duty (*C++ function*), 931
linenoiseCompletions (*C++ type*), 1459

M

M_BGE (*C macro*), 2327
M_BL (*C macro*), 2327
M_BRANCH (*C macro*), 2326
M_BSEQ (*C macro*), 2328
M_BSGE (*C macro*), 2327
M_BSGT (*C macro*), 2328
M_BSLE (*C macro*), 2328
M_BSLT (*C macro*), 2327
M_BX (*C macro*), 2327
M_BXF (*C macro*), 2327
M_BXZ (*C macro*), 2327
M_LABEL (*C macro*), 2326
M_LABELPC (*C macro*), 2326
M_MOVL (*C macro*), 2326
MALLOC_CAP_32BIT (*C macro*), 1644
MALLOC_CAP_8BIT (*C macro*), 1644
MALLOC_CAP_DEFAULT (*C macro*), 1644
MALLOC_CAP_DMA (*C macro*), 1644
MALLOC_CAP_EXEC (*C macro*), 1644
MALLOC_CAP_INTERNAL (*C macro*), 1644
MALLOC_CAP_INVALID (*C macro*), 1645
MALLOC_CAP_IRAM_8BIT (*C macro*), 1645
MALLOC_CAP_PID2 (*C macro*), 1644
MALLOC_CAP_PID3 (*C macro*), 1644
MALLOC_CAP_PID4 (*C macro*), 1644
MALLOC_CAP_PID5 (*C macro*), 1644
MALLOC_CAP_PID6 (*C macro*), 1644
MALLOC_CAP_PID7 (*C macro*), 1644
MALLOC_CAP_RETENTION (*C macro*), 1645
MALLOC_CAP_RTCRAM (*C macro*), 1645
MALLOC_CAP_SPIRAM (*C macro*), 1644
MAX_BLE_DEVNAME_LEN (*C macro*), 1314
MAX_BLE_MANUFACTURER_DATA_LEN (*C macro*), 1314
MAX_FDS (*C macro*), 1433
MAX_PASSPHRASE_LEN (*C macro*), 704
MAX_SSID_LEN (*C macro*), 704
MAX_WPS_AP_CRED (*C macro*), 704
mb_communication_info_t (*C++ union*), 1264
mb_communication_info_t::baudrate (*C++ member*), 1264
mb_communication_info_t::dummy_port (*C++ member*), 1264
mb_communication_info_t::ip_addr (*C++ member*), 1264
mb_communication_info_t::ip_addr_type (*C++ member*), 1264
mb_communication_info_t::ip_mode (*C++ member*), 1264
mb_communication_info_t::ip_netif_ptr (*C++ member*), 1264
mb_communication_info_t::ip_port (*C++ member*), 1264
mb_communication_info_t::mode (*C++ member*), 1264
mb_communication_info_t::parity (*C++ member*), 1264
mb_communication_info_t::port (*C++ member*), 1264
mb_communication_info_t::slave_addr (*C++ member*), 1264
mb_communication_info_t::[anonymous] (*C++ member*), 1264
MB_CONTROLLER_PRIORITY (*C macro*), 1264
MB_CONTROLLER_STACK_SIZE (*C macro*), 1264
mb_descr_size_t (*C++ enum*), 1272
mb_descr_size_t::PARAM_MAX_SIZE (*C++ enumerator*), 1272
mb_descr_size_t::PARAM_SIZE_ASCII (*C++ enumerator*), 1272
mb_descr_size_t::PARAM_SIZE_ASCII24 (*C++ enumerator*), 1272
mb_descr_size_t::PARAM_SIZE_FLOAT (*C++ enumerator*), 1272
mb_descr_size_t::PARAM_SIZE_U16 (*C++ enumerator*), 1272
mb_descr_size_t::PARAM_SIZE_U32 (*C++ enumerator*), 1272
mb_descr_size_t::PARAM_SIZE_U8 (*C++ enumerator*), 1272
mb_descr_type_t (*C++ enum*), 1272
mb_descr_type_t::PARAM_TYPE_ASCII (*C++ enumerator*), 1272
mb_descr_type_t::PARAM_TYPE_FLOAT (*C++ enumerator*), 1272
mb_descr_type_t::PARAM_TYPE_U16 (*C++ enumerator*), 1272
mb_descr_type_t::PARAM_TYPE_U32 (*C++ enumerator*), 1272
mb_descr_type_t::PARAM_TYPE_U8 (*C++ enumerator*), 1272
MB_DEVICE_ADDRESS (*C macro*), 1265
MB_DEVICE_SPEED (*C macro*), 1265
mb_event_group_t (*C++ enum*), 1266
mb_event_group_t::MB_EVENT_COILS_RD (*C++ enumerator*), 1266
mb_event_group_t::MB_EVENT_COILS_WR (*C++ enumerator*), 1266
mb_event_group_t::MB_EVENT_DISCRETE_RD

(C++ enumerator), 1266
mb_event_group_t::MB_EVENT_HOLDING_REG_RD (C++ enumerator), 1266
mb_event_group_t::MB_EVENT_HOLDING_REG_WR (C++ enumerator), 1266
mb_event_group_t::MB_EVENT_INPUT_REG_RD (C++ enumerator), 1266
mb_event_group_t::MB_EVENT_NO_EVENTS (C++ enumerator), 1266
mb_event_group_t::MB_EVENT_STACK_STARTED (C++ enumerator), 1266
MB_MASTER_ASSERT (C macro), 1272
MB_MASTER_CHECK (C macro), 1272
mb_mode_type_t (C++ enum), 1267
mb_mode_type_t::MB_MODE_ASCII (C++ enumerator), 1267
mb_mode_type_t::MB_MODE_RTU (C++ enumerator), 1267
mb_mode_type_t::MB_MODE_TCP (C++ enumerator), 1267
mb_mode_type_t::MB_MODE_UDP (C++ enumerator), 1267
MB_PAR_INFO_TOUT (C macro), 1265
mb_param_info_t (C++ struct), 1274
mb_param_info_t::address (C++ member), 1275
mb_param_info_t::mb_offset (C++ member), 1275
mb_param_info_t::size (C++ member), 1275
mb_param_info_t::time_stamp (C++ member), 1274
mb_param_info_t::type (C++ member), 1275
mb_param_perms_t (C++ enum), 1272
mb_param_perms_t::PAR_PERMS_READ (C++ enumerator), 1273
mb_param_perms_t::PAR_PERMS_READ_TRIGGER (C++ enumerator), 1273
mb_param_perms_t::PAR_PERMS_READ_WRITE (C++ enumerator), 1273
mb_param_perms_t::PAR_PERMS_READ_WRITE_TRIGGER (C++ enumerator), 1273
mb_param_perms_t::PAR_PERMS_TRIGGER (C++ enumerator), 1273
mb_param_perms_t::PAR_PERMS_WRITE (C++ enumerator), 1273
mb_param_perms_t::PAR_PERMS_WRITE_TRIGGER (C++ enumerator), 1273
mb_param_request_t (C++ struct), 1271
mb_param_request_t::command (C++ member), 1271
mb_param_request_t::reg_size (C++ member), 1271
mb_param_request_t::reg_start (C++ member), 1271
mb_param_request_t::slave_addr (C++ member), 1271
mb_param_type_t (C++ enum), 1266
mb_param_type_t::MB_PARAM_COIL (C++ enumerator), 1266
mb_param_type_t::MB_PARAM_COUNT (C++ enumerator), 1267
mb_param_type_t::MB_PARAM_DISCRETE (C++ enumerator), 1266
mb_param_type_t::MB_PARAM_HOLDING (C++ enumerator), 1266
mb_param_type_t::MB_PARAM_INPUT (C++ enumerator), 1266
mb_param_type_t::MB_PARAM_UNKNOWN (C++ enumerator), 1267
mb_parameter_descriptor_t (C++ struct), 1270
mb_parameter_descriptor_t::access (C++ member), 1271
mb_parameter_descriptor_t::cid (C++ member), 1270
mb_parameter_descriptor_t::mb_param_type (C++ member), 1271
mb_parameter_descriptor_t::mb_reg_start (C++ member), 1271
mb_parameter_descriptor_t::mb_size (C++ member), 1271
mb_parameter_descriptor_t::mb_slave_addr (C++ member), 1271
mb_parameter_descriptor_t::param_key (C++ member), 1270
mb_parameter_descriptor_t::param_offset (C++ member), 1271
mb_parameter_descriptor_t::param_opts (C++ member), 1271
mb_parameter_descriptor_t::param_size (C++ member), 1271
mb_parameter_descriptor_t::param_type (C++ member), 1271
mb_parameter_descriptor_t::param_units (C++ member), 1271
mb_parameter_opt_t (C++ union), 1270
mb_parameter_opt_t::max (C++ member), 1270
mb_parameter_opt_t::min (C++ member), 1270
mb_parameter_opt_t::opt1 (C++ member), 1270
mb_parameter_opt_t::opt2 (C++ member), 1270
mb_parameter_opt_t::opt3 (C++ member), 1270
mb_parameter_opt_t::step (C++ member), 1270
mb_parameter_opt_t::[anonymous] (C++ member), 1270
MB_PARITY_NONE (C macro), 1265
mb_port_type_t (C++ enum), 1265
mb_port_type_t::MB_PORT_COUNT (C++ enumerator), 1266
mb_port_type_t::MB_PORT_INACTIVE (C++ enumerator), 1266

mb_port_type_t::MB_PORT_SERIAL_MASTER (C++ enumerator), 1265
mb_port_type_t::MB_PORT_SERIAL_SLAVE (C++ enumerator), 1265
mb_port_type_t::MB_PORT_TCP_MASTER (C++ enumerator), 1265
mb_port_type_t::MB_PORT_TCP_SLAVE (C++ enumerator), 1265
mb_register_area_descriptor_t (C++ struct), 1275
mb_register_area_descriptor_t::address (C++ member), 1275
mb_register_area_descriptor_t::size (C++ member), 1275
mb_register_area_descriptor_t::start_offset (C++ member), 1275
mb_register_area_descriptor_t::type (C++ member), 1275
MB_RETURN_ON_FALSE (C macro), 1264
MB_SLAVE_ASSERT (C macro), 1275
MB_SLAVE_CHECK (C macro), 1275
mb_tcp_addr_type_t (C++ enum), 1267
mb_tcp_addr_type_t::MB_IPV4 (C++ enumerator), 1267
mb_tcp_addr_type_t::MB_IPV6 (C++ enumerator), 1267
MB_UART_PORT (C macro), 1265
mbc_master_destroy (C++ function), 1268
mbc_master_get_cid_info (C++ function), 1269
mbc_master_get_parameter (C++ function), 1269
mbc_master_init (C++ function), 1267
mbc_master_init_iface (C++ function), 1268
mbc_master_init_tcp (C++ function), 1267
mbc_master_send_request (C++ function), 1268
mbc_master_set_descriptor (C++ function), 1268
mbc_master_set_parameter (C++ function), 1269
mbc_master_setup (C++ function), 1268
mbc_master_start (C++ function), 1268
mbc_slave_check_event (C++ function), 1274
mbc_slave_destroy (C++ function), 1274
mbc_slave_get_param_info (C++ function), 1274
mbc_slave_init (C++ function), 1273
mbc_slave_init_iface (C++ function), 1273
mbc_slave_init_tcp (C++ function), 1273
mbc_slave_set_descriptor (C++ function), 1274
mbc_slave_setup (C++ function), 1274
mbc_slave_start (C++ function), 1274
mcpwm_action_on_pwmxa_t (C++ type), 967
mcpwm_action_on_pwmxb_t (C++ type), 967
mcpwm_capture_channel_id_t (C++ type), 967
mcpwm_capture_config_t (C++ struct), 965
mcpwm_capture_config_t::cap_edge (C++ member), 965
mcpwm_capture_config_t::cap_prescale (C++ member), 965
mcpwm_capture_config_t::capture_cb (C++ member), 965
mcpwm_capture_config_t::user_data (C++ member), 965
mcpwm_capture_disable (C++ function), 960
mcpwm_capture_disable_channel (C++ function), 961
mcpwm_capture_enable (C++ function), 960
mcpwm_capture_enable_channel (C++ function), 961
mcpwm_capture_on_edge_t (C++ enum), 971
mcpwm_capture_on_edge_t::MCPWM_BOTH_EDGE (C++ enumerator), 971
mcpwm_capture_on_edge_t::MCPWM_NEG_EDGE (C++ enumerator), 971
mcpwm_capture_on_edge_t::MCPWM_POS_EDGE (C++ enumerator), 971
mcpwm_capture_signal_get_edge (C++ function), 961
mcpwm_capture_signal_get_value (C++ function), 961
mcpwm_capture_signal_t (C++ enum), 974
mcpwm_capture_signal_t::MCPWM_SELECT_CAP0 (C++ enumerator), 974
mcpwm_capture_signal_t::MCPWM_SELECT_CAP1 (C++ enumerator), 974
mcpwm_capture_signal_t::MCPWM_SELECT_CAP2 (C++ enumerator), 974
mcpwm_carrier_config_t (C++ struct), 965
mcpwm_carrier_config_t::carrier_duty (C++ member), 965
mcpwm_carrier_config_t::carrier_ivt_mode (C++ member), 965
mcpwm_carrier_config_t::carrier_os_mode (C++ member), 965
mcpwm_carrier_config_t::carrier_period (C++ member), 965
mcpwm_carrier_config_t::pulse_width_in_os (C++ member), 965
mcpwm_carrier_disable (C++ function), 957
mcpwm_carrier_enable (C++ function), 957
mcpwm_carrier_init (C++ function), 957
mcpwm_carrier_oneshot_mode_disable (C++ function), 958
mcpwm_carrier_oneshot_mode_enable (C++ function), 958
mcpwm_carrier_os_t (C++ enum), 969
mcpwm_carrier_os_t::MCPWM_ONESHOT_MODE_DIS (C++ enumerator), 970
mcpwm_carrier_os_t::MCPWM_ONESHOT_MODE_EN (C++ enumerator), 970
mcpwm_carrier_out_ivt_t (C++ enum), 970
mcpwm_carrier_out_ivt_t::MCPWM_CARRIER_OUT_IVT_DI (C++ enumerator), 970

mcpwm_carrier_out_ivt_t::MCPWM_CARRIER_OUT_IVT_EN (C++ enumerator), 970
mcpwm_carrier_output_invert (C++ function), 958
mcpwm_carrier_set_duty_cycle (C++ function), 958
mcpwm_carrier_set_period (C++ function), 958
mcpwm_config_t (C++ struct), 964
mcpwm_config_t::cmpr_a (C++ member), 964
mcpwm_config_t::cmpr_b (C++ member), 964
mcpwm_config_t::counter_mode (C++ member), 965
mcpwm_config_t::duty_mode (C++ member), 964
mcpwm_config_t::frequency (C++ member), 964
mcpwm_counter_type_t (C++ enum), 972
mcpwm_counter_type_t::MCPWM_COUNTER_MAX (C++ enumerator), 972
mcpwm_counter_type_t::MCPWM_DOWN_COUNTER (C++ enumerator), 972
mcpwm_counter_type_t::MCPWM_FREEZE_COUNTER (C++ enumerator), 972
mcpwm_counter_type_t::MCPWM_UP_COUNTER (C++ enumerator), 972
mcpwm_counter_type_t::MCPWM_UP_DOWN_COUNTER (C++ enumerator), 972
mcpwm_deadtime_disable (C++ function), 959
mcpwm_deadtime_enable (C++ function), 959
mcpwm_deadtime_type_t (C++ enum), 973
mcpwm_deadtime_type_t::MCPWM_ACTIVE_HIGH_COMPLEMENT_MODE (C++ enumerator), 973
mcpwm_deadtime_type_t::MCPWM_ACTIVE_HIGH_MODE (C++ enumerator), 973
mcpwm_deadtime_type_t::MCPWM_ACTIVE_LOW_COMPLEMENT_MODE (C++ enumerator), 973
mcpwm_deadtime_type_t::MCPWM_ACTIVE_LOW_MODE (C++ enumerator), 973
mcpwm_deadtime_type_t::MCPWM_ACTIVE_RED_FED_FROM_PWMXA (C++ enumerator), 973
mcpwm_deadtime_type_t::MCPWM_ACTIVE_RED_FED_FROM_PWMXB (C++ enumerator), 973
mcpwm_deadtime_type_t::MCPWM_BYPASS_FED (C++ enumerator), 973
mcpwm_deadtime_type_t::MCPWM_BYPASS_RED (C++ enumerator), 973
mcpwm_deadtime_type_t::MCPWM_DEADTIME_BYPASS (C++ enumerator), 973
mcpwm_deadtime_type_t::MCPWM_DEADTIME_TYPE_MAX (C++ enumerator), 973
mcpwm_duty_type_t (C++ enum), 972
mcpwm_duty_type_t::MCPWM_DUTY_MODE_0 (C++ enumerator), 972
mcpwm_duty_type_t::MCPWM_DUTY_MODE_1 (C++ enumerator), 972
mcpwm_duty_type_t::MCPWM_DUTY_MODE_MAX (C++ enumerator), 972
mcpwm_duty_type_t::MCPWM_HAL_GENERATOR_MODE_FORCE_HIGH (C++ enumerator), 972
mcpwm_duty_type_t::MCPWM_HAL_GENERATOR_MODE_FORCE_LOW (C++ enumerator), 972
mcpwm_fault_deinit (C++ function), 960
mcpwm_fault_init (C++ function), 959
mcpwm_fault_input_level_t (C++ enum), 971
mcpwm_fault_input_level_t::MCPWM_HIGH_LEVEL_TGR (C++ enumerator), 971
mcpwm_fault_input_level_t::MCPWM_LOW_LEVEL_TGR (C++ enumerator), 971
mcpwm_fault_set_cyc_mode (C++ function), 959
mcpwm_fault_set_oneshot_mode (C++ function), 959
mcpwm_fault_signal_t (C++ enum), 970
mcpwm_fault_signal_t::MCPWM_SELECT_F0 (C++ enumerator), 970
mcpwm_fault_signal_t::MCPWM_SELECT_F1 (C++ enumerator), 970
mcpwm_fault_signal_t::MCPWM_SELECT_F2 (C++ enumerator), 970
MCPWM_FORCE_MCPWMXA_HIGH (C macro), 966
MCPWM_FORCE_MCPWMXA_LOW (C macro), 966
MCPWM_FORCE_MCPWMXB_HIGH (C macro), 967
MCPWM_FORCE_MCPWMXB_LOW (C macro), 967
mcpwm_generator_action_t (C++ enum), 953
mcpwm_generator_action_t::MCPWM_GEN_ACTION_HIGH (C++ enumerator), 953
mcpwm_generator_action_t::MCPWM_GEN_ACTION_KEEP (C++ enumerator), 953
mcpwm_generator_action_t::MCPWM_GEN_ACTION_LOW (C++ enumerator), 953
mcpwm_generator_action_t::MCPWM_GEN_ACTION_TOGGLE (C++ enumerator), 953
mcpwm_generator_t (C++ enum), 969
mcpwm_generator_t::MCPWM_GEN_A (C++ enumerator), 969
mcpwm_generator_t::MCPWM_GEN_B (C++ enumerator), 969
mcpwm_generator_t::MCPWM_GEN_MAX (C++ enumerator), 969
mcpwm_get_duty (C++ function), 956
mcpwm_get_duty_in_us (C++ function), 956
mcpwm_get_frequency (C++ function), 956
mcpwm_gpio_init (C++ function), 954
mcpwm_group_set_resolution (C++ function), 954
mcpwm_init (C++ function), 954
mcpwm_intr_t (C++ enum), 971
mcpwm_intr_t::MCPWM_LL_INTR_CAP0 (C++ enumerator), 972
mcpwm_intr_t::MCPWM_LL_INTR_CAP1 (C++ enumerator), 972
mcpwm_intr_t::MCPWM_LL_INTR_CAP2 (C++ enumerator), 972
mcpwm_io_signals_t (C++ enum), 968
mcpwm_io_signals_t::MCPWM0A (C++ enumer-

ator), 968
mcpwm_io_signals_t::MCPWM0B (*C++ enumerator*), 968
mcpwm_io_signals_t::MCPWM1A (*C++ enumerator*), 968
mcpwm_io_signals_t::MCPWM1B (*C++ enumerator*), 968
mcpwm_io_signals_t::MCPWM2A (*C++ enumerator*), 968
mcpwm_io_signals_t::MCPWM2B (*C++ enumerator*), 968
mcpwm_io_signals_t::MCPWM_CAP_0 (*C++ enumerator*), 968
mcpwm_io_signals_t::MCPWM_CAP_1 (*C++ enumerator*), 968
mcpwm_io_signals_t::MCPWM_CAP_2 (*C++ enumerator*), 969
mcpwm_io_signals_t::MCPWM_FAULT_0 (*C++ enumerator*), 968
mcpwm_io_signals_t::MCPWM_FAULT_1 (*C++ enumerator*), 968
mcpwm_io_signals_t::MCPWM_FAULT_2 (*C++ enumerator*), 968
mcpwm_io_signals_t::MCPWM_SYNC_0 (*C++ enumerator*), 968
mcpwm_io_signals_t::MCPWM_SYNC_1 (*C++ enumerator*), 968
mcpwm_io_signals_t::MCPWM_SYNC_2 (*C++ enumerator*), 968
mcpwm_isr_register (*C++ function*), 963
MCPWM_NO_CHANGE_IN_MCPWMXA (*C macro*), 966
MCPWM_NO_CHANGE_IN_MCPWMXB (*C macro*), 966
mcpwm_operator_t (*C++ type*), 967
MCPWM_OPR_A (*C macro*), 966
MCPWM_OPR_B (*C macro*), 966
MCPWM_OPR_MAX (*C macro*), 966
mcpwm_output_action_t (*C++ enum*), 973
mcpwm_output_action_t::MCPWM_ACTION_FORCE_HIGH (*C++ enumerator*), 974
mcpwm_output_action_t::MCPWM_ACTION_FORCE_LOW (*C++ enumerator*), 974
mcpwm_output_action_t::MCPWM_ACTION_NO_CHANGE (*C++ enumerator*), 973
mcpwm_output_action_t::MCPWM_ACTION_TOGGLE (*C++ enumerator*), 974
mcpwm_pin_config_t (*C++ struct*), 963
mcpwm_pin_config_t::mcpwm0a_out_num (*C++ member*), 963
mcpwm_pin_config_t::mcpwm0b_out_num (*C++ member*), 963
mcpwm_pin_config_t::mcpwm1a_out_num (*C++ member*), 963
mcpwm_pin_config_t::mcpwm1b_out_num (*C++ member*), 963
mcpwm_pin_config_t::mcpwm2a_out_num (*C++ member*), 963
mcpwm_pin_config_t::mcpwm2b_out_num (*C++ member*), 963
mcpwm_pin_config_t::mcpwm_cap0_in_num (*C++ member*), 964
mcpwm_pin_config_t::mcpwm_cap1_in_num (*C++ member*), 964
mcpwm_pin_config_t::mcpwm_cap2_in_num (*C++ member*), 964
mcpwm_pin_config_t::mcpwm_fault0_in_num (*C++ member*), 964
mcpwm_pin_config_t::mcpwm_fault1_in_num (*C++ member*), 964
mcpwm_pin_config_t::mcpwm_fault2_in_num (*C++ member*), 964
mcpwm_pin_config_t::mcpwm_sync0_in_num (*C++ member*), 963
mcpwm_pin_config_t::mcpwm_sync1_in_num (*C++ member*), 963
mcpwm_pin_config_t::mcpwm_sync2_in_num (*C++ member*), 964
MCPWM_SELCT_SYNC0 (*C macro*), 966
MCPWM_SELCT_SYNC1 (*C macro*), 966
MCPWM_SELCT_SYNC2 (*C macro*), 966
mcpwm_set_duty (*C++ function*), 955
mcpwm_set_duty_in_us (*C++ function*), 955
mcpwm_set_duty_type (*C++ function*), 955
mcpwm_set_frequency (*C++ function*), 955
mcpwm_set_pin (*C++ function*), 954
mcpwm_set_signal_high (*C++ function*), 956
mcpwm_set_signal_low (*C++ function*), 956
mcpwm_set_timer_sync_output (*C++ function*), 962
mcpwm_start (*C++ function*), 957
mcpwm_stop (*C++ function*), 957
mcpwm_sync_config_t (*C++ struct*), 965
mcpwm_sync_config_t::count_direction (*C++ member*), 966
mcpwm_sync_config_t::sync_sig (*C++ member*), 966
mcpwm_sync_config_t::timer_val (*C++ member*), 966
mcpwm_sync_configure (*C++ function*), 962
mcpwm_sync_disable (*C++ function*), 962
mcpwm_sync_enable (*C++ function*), 961
mcpwm_sync_invert_gpio_synchro (*C++ function*), 962
mcpwm_sync_signal_t (*C++ enum*), 970
mcpwm_sync_signal_t::MCPWM_SELECT_GPIO_SYNC0 (*C++ enumerator*), 970
mcpwm_sync_signal_t::MCPWM_SELECT_GPIO_SYNC1 (*C++ enumerator*), 971
mcpwm_sync_signal_t::MCPWM_SELECT_GPIO_SYNC2 (*C++ enumerator*), 971
mcpwm_sync_signal_t::MCPWM_SELECT_NO_INPUT (*C++ enumerator*), 970
mcpwm_sync_signal_t::MCPWM_SELECT_TIMER0_SYNC (*C++ enumerator*), 970
mcpwm_sync_signal_t::MCPWM_SELECT_TIMER1_SYNC (*C++ enumerator*), 970
mcpwm_sync_signal_t::MCPWM_SELECT_TIMER2_SYNC

(C++ *enumerator*), 970
mcpwm_timer_count_mode_t (C++ *enum*), 952
mcpwm_timer_count_mode_t::MCPWM_TIMER_COUNT_MODE_DOWN (C++ *enumerator*), 952
mcpwm_timer_count_mode_t::MCPWM_TIMER_COUNT_MODE_PAUSE (C++ *enumerator*), 952
mcpwm_timer_count_mode_t::MCPWM_TIMER_COUNT_MODE_UP (C++ *enumerator*), 952
mcpwm_timer_count_mode_t::MCPWM_TIMER_COUNT_MODE_UP_DOWN (C++ *enumerator*), 952
mcpwm_timer_direction_t (C++ *enum*), 952
mcpwm_timer_direction_t::MCPWM_TIMER_DIRECTION_DOWN (C++ *enumerator*), 952
mcpwm_timer_direction_t::MCPWM_TIMER_DIRECTION_UP (C++ *enumerator*), 952
mcpwm_timer_event_t (C++ *enum*), 952
mcpwm_timer_event_t::MCPWM_TIMER_EVENT_PEAK (C++ *enumerator*), 952
mcpwm_timer_event_t::MCPWM_TIMER_EVENT_ZERO (C++ *enumerator*), 952
mcpwm_timer_execute_cmd_t (C++ *enum*), 953
mcpwm_timer_execute_cmd_t::MCPWM_TIMER_START_NO_STOP (C++ *enumerator*), 953
mcpwm_timer_execute_cmd_t::MCPWM_TIMER_START_STOP_AT_PEAK (C++ *enumerator*), 953
mcpwm_timer_execute_cmd_t::MCPWM_TIMER_START_STOP_AT_ZERO (C++ *enumerator*), 953
mcpwm_timer_execute_cmd_t::MCPWM_TIMER_STOP_AT_PEAK (C++ *enumerator*), 953
mcpwm_timer_execute_cmd_t::MCPWM_TIMER_STOP_AT_ZERO (C++ *enumerator*), 953
mcpwm_timer_set_resolution (C++ *function*), 955
mcpwm_timer_sync_trigger_t (C++ *enum*), 971
mcpwm_timer_sync_trigger_t::MCPWM_SWSYNC_SOURCE_DISABLED (C++ *enumerator*), 971
mcpwm_timer_sync_trigger_t::MCPWM_SWSYNC_SOURCE_SYNCI (C++ *enumerator*), 971
mcpwm_timer_sync_trigger_t::MCPWM_SWSYNC_SOURCE_TEZ (C++ *enumerator*), 971
mcpwm_timer_sync_trigger_t::MCPWM_SWSYNC_SOURCE_TEZ2 (C++ *enumerator*), 971
mcpwm_timer_t (C++ *enum*), 969
mcpwm_timer_t::MCPWM_TIMER_0 (C++ *enumerator*), 969
mcpwm_timer_t::MCPWM_TIMER_1 (C++ *enumerator*), 969
mcpwm_timer_t::MCPWM_TIMER_2 (C++ *enumerator*), 969
mcpwm_timer_t::MCPWM_TIMER_MAX (C++ *enumerator*), 969
mcpwm_timer_trigger_soft_sync (C++ *function*), 962
MCPWM_TOG_MCPWMXA (C *macro*), 966
MCPWM_TOG_MCPWMXB (C *macro*), 967
mcpwm_trip_type_t (C++ *enum*), 953
mcpwm_trip_type_t::MCPWM_TRIP_TYPE_CBC (C++ *enumerator*), 953
mcpwm_trip_type_t::MCPWM_TRIP_TYPE_OST (C++ *enumerator*), 953
mcpwm_unit_t (C++ *enum*), 969
mcpwm_unit_t::MCPWM_UNIT_0 (C++ *enumerator*), 969
mcpwm_unit_t::MCPWM_UNIT_1 (C++ *enumerator*), 969
mcpwm_unit_t::MCPWM_UNIT_MAX (C++ *enumerator*), 969
mdns_delegate_hostname_add (C++ *function*), 1241
mdns_delegate_hostname_remove (C++ *function*), 1241
mdns_free (C++ *function*), 1240
mdns_handle_system_event (C++ *function*), 1249
mdns_hostname_exists (C++ *function*), 1241
mdns_hostname_set (C++ *function*), 1240
mdns_if_internal (C++ *enum*), 1251
mdns_if_internal::MDNS_IF_AP (C++ *enumerator*), 1251
mdns_if_internal::MDNS_IF_ETH (C++ *enumerator*), 1251
mdns_if_internal::MDNS_IF_MAX (C++ *enumerator*), 1251
mdns_if_internal::MDNS_IF_STA (C++ *enumerator*), 1251
mdns_if_t (C++ *type*), 1251
mdns_init (C++ *function*), 1240
mdns_instance_name_set (C++ *function*), 1241
mdns_ip_addr_s (C++ *struct*), 1249
mdns_ip_addr_s::addr (C++ *member*), 1249
mdns_ip_addr_s::next (C++ *member*), 1249
mdns_ip_addr_t (C++ *type*), 1251
mdns_ip_protocol_t (C++ *enum*), 1251
mdns_ip_protocol_t::MDNS_IP_PROTOCOL_MAX (C++ *enumerator*), 1251
mdns_ip_protocol_t::MDNS_IP_PROTOCOL_V4 (C++ *enumerator*), 1251
mdns_ip_protocol_t::MDNS_IP_PROTOCOL_V6 (C++ *enumerator*), 1251
mdns_query (C++ *function*), 1247
mdns_query_a (C++ *function*), 1248
mdns_query_aaaa (C++ *function*), 1248
mdns_query_async_delete (C++ *function*), 1246
mdns_query_async_get_results (C++ *function*), 1247
mdns_query_async_new (C++ *function*), 1247
mdns_query_notify_t (C++ *type*), 1251
mdns_query_ptr (C++ *function*), 1247
mdns_query_results_free (C++ *function*), 1247
mdns_query_srv (C++ *function*), 1248
mdns_query_txt (C++ *function*), 1248
mdns_result_s (C++ *struct*), 1249
mdns_result_s::addr (C++ *member*), 1250

mdns_result_s::hostname (C++ member), 1250
mdns_result_s::instance_name (C++ member), 1250
mdns_result_s::ip_protocol (C++ member), 1250
mdns_result_s::next (C++ member), 1250
mdns_result_s::port (C++ member), 1250
mdns_result_s::proto (C++ member), 1250
mdns_result_s::service_type (C++ member), 1250
mdns_result_s::tcpip_if (C++ member), 1250
mdns_result_s::ttl (C++ member), 1250
mdns_result_s::txt (C++ member), 1250
mdns_result_s::txt_count (C++ member), 1250
mdns_result_s::txt_value_len (C++ member), 1250
mdns_result_t (C++ type), 1251
mdns_search_once_t (C++ type), 1251
mdns_service_add (C++ function), 1241
mdns_service_add_for_host (C++ function), 1242
mdns_service_exists (C++ function), 1242
mdns_service_exists_with_instance (C++ function), 1242
mdns_service_instance_name_set (C++ function), 1243
mdns_service_instance_name_set_for_host (C++ function), 1243
mdns_service_port_set (C++ function), 1243
mdns_service_port_set_for_host (C++ function), 1243
mdns_service_remove (C++ function), 1242
mdns_service_remove_all (C++ function), 1246
mdns_service_remove_for_host (C++ function), 1243
mdns_service_txt_item_remove (C++ function), 1246
mdns_service_txt_item_remove_for_host (C++ function), 1246
mdns_service_txt_item_set (C++ function), 1244
mdns_service_txt_item_set_for_host (C++ function), 1245
mdns_service_txt_item_set_for_host_with_explicit_value_len (C++ function), 1245
mdns_service_txt_item_set_with_explicit_value_len (C++ function), 1245
mdns_service_txt_set (C++ function), 1244
mdns_service_txt_set_for_host (C++ function), 1244
mdns_txt_item_t (C++ struct), 1249
mdns_txt_item_t::key (C++ member), 1249
mdns_txt_item_t::value (C++ member), 1249
MDNS_TYPE_A (C macro), 1250
MDNS_TYPE_AAAA (C macro), 1250
MDNS_TYPE_ANY (C macro), 1251
MDNS_TYPE_NSEC (C macro), 1251
MDNS_TYPE_OPT (C macro), 1251
MDNS_TYPE_PTR (C macro), 1250
MDNS_TYPE_SRV (C macro), 1251
MDNS_TYPE_TXT (C macro), 1250
mesh_addr_t (C++ union), 750
mesh_addr_t::addr (C++ member), 750
mesh_addr_t::mip (C++ member), 750
mesh_ap_cfg_t (C++ struct), 756
mesh_ap_cfg_t::max_connection (C++ member), 756
mesh_ap_cfg_t::nonmesh_max_connection (C++ member), 756
mesh_ap_cfg_t::password (C++ member), 756
MESH_ASSOC_FLAG_NETWORK_FREE (C macro), 761
MESH_ASSOC_FLAG_ROOT_FIXED (C macro), 761
MESH_ASSOC_FLAG_ROOTS_FOUND (C macro), 761
MESH_ASSOC_FLAG_VOTE_IN_PROGRESS (C macro), 761
mesh_cfg_t (C++ struct), 756
mesh_cfg_t::allow_channel_switch (C++ member), 757
mesh_cfg_t::channel (C++ member), 757
mesh_cfg_t::crypto_funcs (C++ member), 757
mesh_cfg_t::mesh_ap (C++ member), 757
mesh_cfg_t::mesh_id (C++ member), 757
mesh_cfg_t::router (C++ member), 757
MESH_DATA_DROP (C macro), 760
MESH_DATA_ENC (C macro), 760
MESH_DATA_FROMDS (C macro), 760
MESH_DATA_GROUP (C macro), 760
MESH_DATA_NONBLOCK (C macro), 760
MESH_DATA_P2P (C macro), 760
mesh_data_t (C++ struct), 755
mesh_data_t::data (C++ member), 755
mesh_data_t::proto (C++ member), 756
mesh_data_t::size (C++ member), 755
mesh_data_t::tos (C++ member), 756
MESH_DATA_TODS (C macro), 760
mesh_disconnect_reason_t (C++ enum), 765
mesh_disconnect_reason_t::MESH_REASON_CYCLIC (C++ enumerator), 765
mesh_disconnect_reason_t::MESH_REASON_DIFF_ID (C++ enumerator), 765
mesh_disconnect_reason_t::MESH_REASON_EMPTY_PASSW (C++ enumerator), 765
mesh_disconnect_reason_t::MESH_REASON_IE_UNKNOWN (C++ enumerator), 765
mesh_disconnect_reason_t::MESH_REASON_LEAF (C++ enumerator), 765
mesh_disconnect_reason_t::MESH_REASON_PARENT_IDLE (C++ enumerator), 765

mesh_disconnect_reason_t::MESH_REASON_PARENT_STOPPED (C++ enumerator), 765
mesh_disconnect_reason_t::MESH_REASON_PARENT_UNENCRYPTED (C++ enumerator), 766
mesh_disconnect_reason_t::MESH_REASON_PARENT_WORSE (C++ enumerator), 765
mesh_disconnect_reason_t::MESH_REASON_ROOTS (C++ enumerator), 765
mesh_disconnect_reason_t::MESH_REASON_SCAN_FAIL (C++ enumerator), 765
mesh_disconnect_reason_t::MESH_REASON_WAIVE_ROOT (C++ enumerator), 765
mesh_event_channel_switch_t (C++ struct), 752
mesh_event_channel_switch_t::channel (C++ member), 752
mesh_event_child_connected_t (C++ type), 761
mesh_event_child_disconnected_t (C++ type), 761
mesh_event_connected_t (C++ struct), 752
mesh_event_connected_t::connected (C++ member), 752
mesh_event_connected_t::duty (C++ member), 752
mesh_event_connected_t::self_layer (C++ member), 752
mesh_event_disconnected_t (C++ type), 761
mesh_event_find_network_t (C++ struct), 753
mesh_event_find_network_t::channel (C++ member), 753
mesh_event_find_network_t::router_bssid (C++ member), 753
mesh_event_id_t (C++ enum), 762
mesh_event_id_t::MESH_EVENT_CHANNEL_SWITCH (C++ enumerator), 762
mesh_event_id_t::MESH_EVENT_CHILD_CONNECTED (C++ enumerator), 762
mesh_event_id_t::MESH_EVENT_CHILD_DISCONNECTED (C++ enumerator), 762
mesh_event_id_t::MESH_EVENT_FIND_NETWORK (C++ enumerator), 763
mesh_event_id_t::MESH_EVENT_LAYER_CHANGE (C++ enumerator), 762
mesh_event_id_t::MESH_EVENT_MAX (C++ enumerator), 763
mesh_event_id_t::MESH_EVENT_NETWORK_STATE (C++ enumerator), 763
mesh_event_id_t::MESH_EVENT_NO_PARENT_FOUND (C++ enumerator), 762
mesh_event_id_t::MESH_EVENT_PARENT_CONNECTED (C++ enumerator), 762
mesh_event_id_t::MESH_EVENT_PARENT_DISCONNECTED (C++ enumerator), 762
mesh_event_id_t::MESH_EVENT_PS_CHILD_DUTY (C++ enumerator), 763
mesh_event_id_t::MESH_EVENT_PS_DEVICE_DUTY (C++ enumerator), 763
mesh_event_id_t::MESH_EVENT_PS_PARENT_DUTY (C++ enumerator), 763
mesh_event_id_t::MESH_EVENT_ROOT_ADDRESS (C++ enumerator), 762
mesh_event_id_t::MESH_EVENT_ROOT_ASKED_YIELD (C++ enumerator), 763
mesh_event_id_t::MESH_EVENT_ROOT_FIXED (C++ enumerator), 763
mesh_event_id_t::MESH_EVENT_ROOT_SWITCH_ACK (C++ enumerator), 763
mesh_event_id_t::MESH_EVENT_ROOT_SWITCH_REQ (C++ enumerator), 762
mesh_event_id_t::MESH_EVENT_ROUTER_SWITCH (C++ enumerator), 763
mesh_event_id_t::MESH_EVENT_ROUTING_TABLE_ADD (C++ enumerator), 762
mesh_event_id_t::MESH_EVENT_ROUTING_TABLE_REMOVE (C++ enumerator), 762
mesh_event_id_t::MESH_EVENT_SCAN_DONE (C++ enumerator), 763
mesh_event_id_t::MESH_EVENT_STARTED (C++ enumerator), 762
mesh_event_id_t::MESH_EVENT_STOP_RECONNECTION (C++ enumerator), 763
mesh_event_id_t::MESH_EVENT_STOPPED (C++ enumerator), 762
mesh_event_id_t::MESH_EVENT_TODS_STATE (C++ enumerator), 762
mesh_event_id_t::MESH_EVENT_VOTE_STARTED (C++ enumerator), 762
mesh_event_id_t::MESH_EVENT_VOTE_STOPPED (C++ enumerator), 762
mesh_event_info_t (C++ union), 750
mesh_event_info_t::channel_switch (C++ member), 750
mesh_event_info_t::child_connected (C++ member), 750
mesh_event_info_t::child_disconnected (C++ member), 750
mesh_event_info_t::connected (C++ member), 751
mesh_event_info_t::disconnected (C++ member), 751
mesh_event_info_t::find_network (C++ member), 751
mesh_event_info_t::layer_change (C++ member), 751
mesh_event_info_t::network_state (C++ member), 751
mesh_event_info_t::no_parent (C++ member), 751
mesh_event_info_t::ps_duty (C++ member), 751
mesh_event_info_t::root_addr (C++ member), 751
mesh_event_info_t::root_conflict (C++ member), 751
mesh_event_info_t::root_fixed (C++

member), 751
mesh_event_info_t::router_switch (*C++ member*), 751
mesh_event_info_t::routing_table (*C++ member*), 750
mesh_event_info_t::scan_done (*C++ member*), 751
mesh_event_info_t::switch_req (*C++ member*), 751
mesh_event_info_t::toDS_state (*C++ member*), 751
mesh_event_info_t::vote_started (*C++ member*), 751
mesh_event_layer_change_t (*C++ struct*), 753
mesh_event_layer_change_t::new_layer (*C++ member*), 753
mesh_event_network_state_t (*C++ struct*), 755
mesh_event_network_state_t::is_rootless (*C++ member*), 755
mesh_event_no_parent_found_t (*C++ struct*), 752
mesh_event_no_parent_found_t::scan_times (*C++ member*), 753
mesh_event_ps_duty_t (*C++ struct*), 755
mesh_event_ps_duty_t::child_connected (*C++ member*), 755
mesh_event_ps_duty_t::duty (*C++ member*), 755
mesh_event_root_address_t (*C++ type*), 761
mesh_event_root_conflict_t (*C++ struct*), 754
mesh_event_root_conflict_t::addr (*C++ member*), 754
mesh_event_root_conflict_t::capacity (*C++ member*), 754
mesh_event_root_conflict_t::rssi (*C++ member*), 754
mesh_event_root_fixed_t (*C++ struct*), 754
mesh_event_root_fixed_t::is_fixed (*C++ member*), 754
mesh_event_root_switch_req_t (*C++ struct*), 753
mesh_event_root_switch_req_t::rc_addr (*C++ member*), 754
mesh_event_root_switch_req_t::reason (*C++ member*), 754
mesh_event_router_switch_t (*C++ type*), 761
mesh_event_routing_table_change_t (*C++ struct*), 754
mesh_event_routing_table_change_t::rt_size_change (*C++ member*), 754
mesh_event_routing_table_change_t::rt_size_new (*C++ member*), 754
mesh_event_scan_done_t (*C++ struct*), 754
mesh_event_scan_done_t::number (*C++ member*), 755
mesh_event_toDS_state_t (*C++ enum*), 766
mesh_event_toDS_state_t::MESH_TODS_REACHABLE (*C++ enumerator*), 766
mesh_event_toDS_state_t::MESH_TODS_UNREACHABLE (*C++ enumerator*), 766
mesh_event_vote_started_t (*C++ struct*), 753
mesh_event_vote_started_t::attempts (*C++ member*), 753
mesh_event_vote_started_t::rc_addr (*C++ member*), 753
mesh_event_vote_started_t::reason (*C++ member*), 753
MESH_INIT_CONFIG_DEFAULT (*C macro*), 761
MESH_MPS (*C macro*), 758
MESH_MTU (*C macro*), 758
MESH_OPT_RECV_DS_ADDR (*C macro*), 760
MESH_OPT_SEND_GROUP (*C macro*), 760
mesh_opt_t (*C++ struct*), 755
mesh_opt_t::len (*C++ member*), 755
mesh_opt_t::type (*C++ member*), 755
mesh_opt_t::val (*C++ member*), 755
mesh_proto_t (*C++ enum*), 764
mesh_proto_t::MESH_PROTO_AP (*C++ enumerator*), 764
mesh_proto_t::MESH_PROTO_BIN (*C++ enumerator*), 764
mesh_proto_t::MESH_PROTO_HTTP (*C++ enumerator*), 764
mesh_proto_t::MESH_PROTO_JSON (*C++ enumerator*), 764
mesh_proto_t::MESH_PROTO_MQTT (*C++ enumerator*), 764
mesh_proto_t::MESH_PROTO_STA (*C++ enumerator*), 764
MESH_PS_DEVICE_DUTY_DEMAND (*C macro*), 761
MESH_PS_DEVICE_DUTY_REQUEST (*C macro*), 761
MESH_PS_NETWORK_DUTY_APPLIED_ENTIRE (*C macro*), 761
MESH_PS_NETWORK_DUTY_APPLIED_UPLINK (*C macro*), 761
MESH_PS_NETWORK_DUTY_MASTER (*C macro*), 761
mesh_rc_config_t (*C++ union*), 751
mesh_rc_config_t::attempts (*C++ member*), 752
mesh_rc_config_t::rc_addr (*C++ member*), 752
MESH_ROOT_LAYER (*C macro*), 758
mesh_router_t (*C++ struct*), 756
mesh_router_t::allow_router_switch (*C++ member*), 756
mesh_router_t::bssid (*C++ member*), 756
mesh_router_t::password (*C++ member*), 756
mesh_router_t::ssid (*C++ member*), 756
mesh_router_t::ssid_len (*C++ member*), 756
mesh_rx_pending_t (*C++ struct*), 758
mesh_rx_pending_t::toDS (*C++ member*), 758
mesh_rx_pending_t::toSelf (*C++ member*),

758
mesh_tos_t (C++ enum), 764
mesh_tos_t::MESH_TOS_DEF (C++ enumerator), 764
mesh_tos_t::MESH_TOS_E2E (C++ enumerator), 764
mesh_tos_t::MESH_TOS_P2P (C++ enumerator), 764
mesh_tx_pending_t (C++ struct), 757
mesh_tx_pending_t::broadcast (C++ member), 758
mesh_tx_pending_t::mgmt (C++ member), 758
mesh_tx_pending_t::to_child (C++ member), 758
mesh_tx_pending_t::to_child_p2p (C++ member), 758
mesh_tx_pending_t::to_parent (C++ member), 757
mesh_tx_pending_t::to_parent_p2p (C++ member), 757
mesh_type_t (C++ enum), 763
mesh_type_t::MESH_IDLE (C++ enumerator), 763
mesh_type_t::MESH_LEAF (C++ enumerator), 764
mesh_type_t::MESH_NODE (C++ enumerator), 764
mesh_type_t::MESH_ROOT (C++ enumerator), 764
mesh_type_t::MESH_STA (C++ enumerator), 764
mesh_vote_reason_t (C++ enum), 765
mesh_vote_reason_t::MESH_VOTE_REASON_CHILD_INITIATED (C++ enumerator), 765
mesh_vote_reason_t::MESH_VOTE_REASON_ROOT_INITIATED (C++ enumerator), 765
mesh_vote_t (C++ struct), 757
mesh_vote_t::config (C++ member), 757
mesh_vote_t::is_rc_specified (C++ member), 757
mesh_vote_t::percentage (C++ member), 757
MessageBufferHandle_t (C++ type), 1617
mip_t (C++ struct), 752
mip_t::ip4 (C++ member), 752
mip_t::port (C++ member), 752
MQTT_ERROR_TYPE_ESP_TLS (C macro), 1136
mqtt_event_callback_t (C++ type), 1136
multi_heap_aligned_alloc (C++ function), 1646
multi_heap_aligned_free (C++ function), 1646
multi_heap_check (C++ function), 1648
multi_heap_dump (C++ function), 1648
multi_heap_free (C++ function), 1647
multi_heap_free_size (C++ function), 1648
multi_heap_get_allocated_size (C++ function), 1647
multi_heap_get_info (C++ function), 1648
multi_heap_handle_t (C++ type), 1649
multi_heap_info_t (C++ struct), 1648
multi_heap_info_t::allocated_blocks (C++ member), 1649
multi_heap_info_t::free_blocks (C++ member), 1649
multi_heap_info_t::largest_free_block (C++ member), 1649
multi_heap_info_t::minimum_free_bytes (C++ member), 1649
multi_heap_info_t::total_allocated_bytes (C++ member), 1649
multi_heap_info_t::total_blocks (C++ member), 1649
multi_heap_info_t::total_free_bytes (C++ member), 1649
multi_heap_malloc (C++ function), 1646
multi_heap_minimum_free_size (C++ function), 1648
multi_heap_realloc (C++ function), 1647
multi_heap_register (C++ function), 1647
multi_heap_set_lock (C++ function), 1647

N

name_uuid (C++ struct), 1313
name_uuid::name (C++ member), 1313
name_uuid::uuid (C++ member), 1313
nvs_close (C++ function), 1363
nvs_commit (C++ function), 1363
NVS_DEFAULT_PART_NAME (C macro), 1367
nvs_entry_find (C++ function), 1364
nvs_entry_info (C++ function), 1365
nvs_entry_info_t (C++ struct), 1365
nvs_entry_info_t::key (C++ member), 1365
nvs_entry_info_t::namespace_name (C++ member), 1365
nvs_entry_info_t::type (C++ member), 1365
nvs_entry_next (C++ function), 1365
nvs_erase_all (C++ function), 1362
nvs_erase_key (C++ function), 1362
nvs_flash_deinit (C++ function), 1355
nvs_flash_deinit_partition (C++ function), 1355
nvs_flash_erase (C++ function), 1355
nvs_flash_erase_partition (C++ function), 1355
nvs_flash_erase_partition_ptr (C++ function), 1356
nvs_flash_generate_keys (C++ function), 1357
nvs_flash_init (C++ function), 1354
nvs_flash_init_partition (C++ function), 1354
nvs_flash_init_partition_ptr (C++ function), 1355
nvs_flash_read_security_cfg (C++ function), 1357
nvs_flash_secure_init (C++ function), 1356

nvs_flash_secure_init_partition (*C++ function*), 1356
nvs_get_blob (*C++ function*), 1361
nvs_get_i16 (*C++ function*), 1359
nvs_get_i32 (*C++ function*), 1360
nvs_get_i64 (*C++ function*), 1360
nvs_get_i8 (*C++ function*), 1359
nvs_get_stats (*C++ function*), 1363
nvs_get_str (*C++ function*), 1360
nvs_get_u16 (*C++ function*), 1359
nvs_get_u32 (*C++ function*), 1360
nvs_get_u64 (*C++ function*), 1360
nvs_get_u8 (*C++ function*), 1359
nvs_get_used_entry_count (*C++ function*), 1364
nvs_handle (*C++ type*), 1368
nvs_handle_t (*C++ type*), 1368
nvs_iterator_t (*C++ type*), 1368
NVS_KEY_NAME_MAX_SIZE (*C macro*), 1367
NVS_KEY_SIZE (*C macro*), 1357
nvs_open (*C++ function*), 1361
nvs_open_from_partition (*C++ function*), 1361
nvs_open_mode (*C++ type*), 1368
nvs_open_mode_t (*C++ enum*), 1368
nvs_open_mode_t::NVS_READONLY (*C++ enumerator*), 1368
nvs_open_mode_t::NVS_READWRITE (*C++ enumerator*), 1368
NVS_PART_NAME_MAX_SIZE (*C macro*), 1367
nvs_release_iterator (*C++ function*), 1365
nvs_sec_cfg_t (*C++ struct*), 1357
nvs_sec_cfg_t::eky (*C++ member*), 1357
nvs_sec_cfg_t::tky (*C++ member*), 1357
nvs_set_blob (*C++ function*), 1362
nvs_set_i16 (*C++ function*), 1358
nvs_set_i32 (*C++ function*), 1358
nvs_set_i64 (*C++ function*), 1358
nvs_set_i8 (*C++ function*), 1357
nvs_set_str (*C++ function*), 1358
nvs_set_u16 (*C++ function*), 1358
nvs_set_u32 (*C++ function*), 1358
nvs_set_u64 (*C++ function*), 1358
nvs_set_u8 (*C++ function*), 1358
nvs_stats_t (*C++ struct*), 1365
nvs_stats_t::free_entries (*C++ member*), 1366
nvs_stats_t::namespace_count (*C++ member*), 1366
nvs_stats_t::total_entries (*C++ member*), 1366
nvs_stats_t::used_entries (*C++ member*), 1365
nvs_type_t (*C++ enum*), 1368
nvs_type_t::NVS_TYPE_ANY (*C++ enumerator*), 1369
nvs_type_t::NVS_TYPE_BLOB (*C++ enumerator*), 1369
nvs_type_t::NVS_TYPE_I16 (*C++ enumerator*), 1368
nvs_type_t::NVS_TYPE_I32 (*C++ enumerator*), 1368
nvs_type_t::NVS_TYPE_I64 (*C++ enumerator*), 1369
nvs_type_t::NVS_TYPE_I8 (*C++ enumerator*), 1368
nvs_type_t::NVS_TYPE_STR (*C++ enumerator*), 1369
nvs_type_t::NVS_TYPE_U16 (*C++ enumerator*), 1368
nvs_type_t::NVS_TYPE_U32 (*C++ enumerator*), 1368
nvs_type_t::NVS_TYPE_U64 (*C++ enumerator*), 1368
nvs_type_t::NVS_TYPE_U8 (*C++ enumerator*), 1368

O

OPCODE_ADC (*C macro*), 2321
OPCODE_ALU (*C macro*), 2321
OPCODE_BRANCH (*C macro*), 2322
OPCODE_DELAY (*C macro*), 2321
OPCODE_END (*C macro*), 2323
OPCODE_HALT (*C macro*), 2323
OPCODE_I2C (*C macro*), 2321
OPCODE_LD (*C macro*), 2323
OPCODE_MACRO (*C macro*), 2323
OPCODE_RD_REG (*C macro*), 2321
OPCODE_ST (*C macro*), 2321
OPCODE_TSENS (*C macro*), 2323
OPCODE_WR_REG (*C macro*), 2320
OTA_SIZE_UNKNOWN (*C macro*), 1703
OTA_WITH_SEQUENTIAL_WRITES (*C macro*), 1703

P

pcnt_channel_edge_action_t (*C++ enum*), 984
pcnt_channel_edge_action_t::PCNT_CHANNEL_EDGE_ACT (*C++ enumerator*), 984
pcnt_channel_edge_action_t::PCNT_CHANNEL_EDGE_ACT (*C++ enumerator*), 984
pcnt_channel_edge_action_t::PCNT_CHANNEL_EDGE_ACT (*C++ enumerator*), 984
pcnt_channel_level_action_t (*C++ enum*), 984
pcnt_channel_level_action_t::PCNT_CHANNEL_LEVEL_A (*C++ enumerator*), 984
pcnt_channel_level_action_t::PCNT_CHANNEL_LEVEL_A (*C++ enumerator*), 984
pcnt_channel_level_action_t::PCNT_CHANNEL_LEVEL_A (*C++ enumerator*), 984
pcnt_channel_t (*C++ enum*), 983
pcnt_channel_t::PCNT_CHANNEL_0 (*C++ enumerator*), 983
pcnt_channel_t::PCNT_CHANNEL_1 (*C++ enumerator*), 983

pcnt_channel_t::PCNT_CHANNEL_MAX (C++ enumerator), 983
pcnt_config_t (C++ struct), 981
pcnt_config_t::channel (C++ member), 981
pcnt_config_t::counter_h_lim (C++ member), 981
pcnt_config_t::counter_l_lim (C++ member), 981
pcnt_config_t::ctrl_gpio_num (C++ member), 981
pcnt_config_t::hctrl_mode (C++ member), 981
pcnt_config_t::lctrl_mode (C++ member), 981
pcnt_config_t::neg_mode (C++ member), 981
pcnt_config_t::pos_mode (C++ member), 981
pcnt_config_t::pulse_gpio_num (C++ member), 981
pcnt_config_t::unit (C++ member), 981
PCNT_COUNT_DEC (C macro), 982
PCNT_COUNT_DIS (C macro), 982
PCNT_COUNT_INC (C macro), 982
PCNT_COUNT_MAX (C macro), 982
pcnt_count_mode_t (C++ type), 982
pcnt_counter_clear (C++ function), 976
pcnt_counter_pause (C++ function), 976
pcnt_counter_resume (C++ function), 976
pcnt_ctrl_mode_t (C++ type), 982
pcnt_event_disable (C++ function), 977
pcnt_event_enable (C++ function), 977
pcnt_evt_type_t (C++ enum), 983
pcnt_evt_type_t::PCNT_EVT_H_LIM (C++ enumerator), 984
pcnt_evt_type_t::PCNT_EVT_L_LIM (C++ enumerator), 983
pcnt_evt_type_t::PCNT_EVT_MAX (C++ enumerator), 984
pcnt_evt_type_t::PCNT_EVT_THRES_0 (C++ enumerator), 983
pcnt_evt_type_t::PCNT_EVT_THRES_1 (C++ enumerator), 983
pcnt_evt_type_t::PCNT_EVT_ZERO (C++ enumerator), 984
pcnt_filter_disable (C++ function), 979
pcnt_filter_enable (C++ function), 979
pcnt_get_counter_value (C++ function), 976
pcnt_get_event_status (C++ function), 978
pcnt_get_event_value (C++ function), 978
pcnt_get_filter_value (C++ function), 979
pcnt_intr_disable (C++ function), 977
pcnt_intr_enable (C++ function), 977
pcnt_isr_handle_t (C++ type), 982
pcnt_isr_handler_add (C++ function), 980
pcnt_isr_handler_remove (C++ function), 980
pcnt_isr_register (C++ function), 978
pcnt_isr_service_install (C++ function), 980
pcnt_isr_service_uninstall (C++ function), 980
pcnt_isr_unregister (C++ function), 978
PCNT_MODE_DISABLE (C macro), 981
PCNT_MODE_KEEP (C macro), 981
PCNT_MODE_MAX (C macro), 982
PCNT_MODE_REVERSE (C macro), 981
PCNT_PIN_NOT_USED (C macro), 981
pcnt_port_t (C++ enum), 982
pcnt_port_t::PCNT_PORT_0 (C++ enumerator), 982
pcnt_port_t::PCNT_PORT_MAX (C++ enumerator), 982
pcnt_set_event_value (C++ function), 977
pcnt_set_filter_value (C++ function), 979
pcnt_set_mode (C++ function), 979
pcnt_set_pin (C++ function), 978
pcnt_unit_config (C++ function), 976
pcnt_unit_count_sign_t (C++ enum), 984
pcnt_unit_count_sign_t::PCNT_UNIT_COUNT_SIGN_NEG (C++ enumerator), 985
pcnt_unit_count_sign_t::PCNT_UNIT_COUNT_SIGN_POS (C++ enumerator), 985
pcnt_unit_count_sign_t::PCNT_UNIT_COUNT_SIGN_ZERO (C++ enumerator), 984
pcnt_unit_count_sign_t::PCNT_UNIT_COUNT_SIGN_ZERO (C++ enumerator), 984
pcnt_unit_t (C++ enum), 982
pcnt_unit_t::PCNT_UNIT_0 (C++ enumerator), 982
pcnt_unit_t::PCNT_UNIT_1 (C++ enumerator), 983
pcnt_unit_t::PCNT_UNIT_2 (C++ enumerator), 983
pcnt_unit_t::PCNT_UNIT_3 (C++ enumerator), 983
pcnt_unit_t::PCNT_UNIT_4 (C++ enumerator), 983
pcnt_unit_t::PCNT_UNIT_5 (C++ enumerator), 983
pcnt_unit_t::PCNT_UNIT_6 (C++ enumerator), 983
pcnt_unit_t::PCNT_UNIT_7 (C++ enumerator), 983
pcnt_unit_t::PCNT_UNIT_MAX (C++ enumerator), 983
pcQueueGetName (C++ function), 1548
pcTaskGetName (C++ function), 1523
pcTimerGetName (C++ function), 1581
PendedFunction_t (C++ type), 1592
portGET_ARGUMENT_COUNT_INNER (C macro), 1685
protocomm_add_endpoint (C++ function), 1306
protocomm_ble_config (C++ struct), 1313
protocomm_ble_config::ble_bonding (C++ member), 1314
protocomm_ble_config::ble_sm_sc (C++ member), 1314
protocomm_ble_config::device_name

(C++ *member*), 1313
protocomm_ble_config::manufacturer_data (C++ *member*), 1313
protocomm_ble_config::manufacturer_data_len (C++ *member*), 1313
protocomm_ble_config::nu_lookup (C++ *member*), 1313
protocomm_ble_config::nu_lookup_count (C++ *member*), 1313
protocomm_ble_config::service_uuid (C++ *member*), 1313
protocomm_ble_config_t (C++ *type*), 1314
protocomm_ble_name_uuid_t (C++ *type*), 1314
protocomm_ble_start (C++ *function*), 1312
protocomm_ble_stop (C++ *function*), 1312
protocomm_close_session (C++ *function*), 1307
protocomm_delete (C++ *function*), 1306
protocomm_http_server_config_t (C++ *struct*), 1312
protocomm_http_server_config_t::port (C++ *member*), 1312
protocomm_http_server_config_t::stack_size (C++ *member*), 1312
protocomm_http_server_config_t::task_priority (C++ *member*), 1312
protocomm_httpd_config_data_t (C++ *union*), 1311
protocomm_httpd_config_data_t::config (C++ *member*), 1311
protocomm_httpd_config_data_t::handle (C++ *member*), 1311
protocomm_httpd_config_t (C++ *struct*), 1312
protocomm_httpd_config_t::data (C++ *member*), 1312
protocomm_httpd_config_t::ext_handle_provided (C++ *member*), 1312
PROTOCOMM_HTTPD_DEFAULT_CONFIG (C *macro*), 1312
protocomm_httpd_start (C++ *function*), 1311
protocomm_httpd_stop (C++ *function*), 1311
protocomm_new (C++ *function*), 1306
protocomm_open_session (C++ *function*), 1307
protocomm_remove_endpoint (C++ *function*), 1306
protocomm_req_handle (C++ *function*), 1307
protocomm_req_handler_t (C++ *type*), 1309
protocomm_security (C++ *struct*), 1309
protocomm_security::cleanup (C++ *member*), 1310
protocomm_security::close_transport_session (C++ *member*), 1310
protocomm_security::decrypt (C++ *member*), 1310
protocomm_security::encrypt (C++ *member*), 1310
protocomm_security::init (C++ *member*), 1310
protocomm_security::new_transport_session (C++ *member*), 1310
protocomm_security::security_req_handler (C++ *member*), 1310
protocomm_security::ver (C++ *member*), 1310
protocomm_security_handle_t (C++ *type*), 1310
protocomm_security_pop (C++ *struct*), 1309
protocomm_security_pop::data (C++ *member*), 1309
protocomm_security_pop::len (C++ *member*), 1309
protocomm_security_pop_t (C++ *type*), 1310
protocomm_security_t (C++ *type*), 1310
protocomm_set_security (C++ *function*), 1308
protocomm_set_version (C++ *function*), 1308
protocomm_t (C++ *type*), 1309
protocomm_unset_security (C++ *function*), 1308
protocomm_unset_version (C++ *function*), 1309
PROV_DATA_FLAGS_FLAG (C *macro*), 430
PROV_DATA_IV_INDEX_FLAG (C *macro*), 430
PROV_DATA_NET_IDX_FLAG (C *macro*), 430
psk_hint_key_t (C++ *type*), 1150
psk_key_hint (C++ *struct*), 1145
psk_key_hint::hint (C++ *member*), 1146
psk_key_hint::key (C++ *member*), 1146
psk_key_hint::key_size (C++ *member*), 1146
PTHREAD_STACK_MIN (C *macro*), 1487
pvTaskGetThreadLocalStoragePointer (C++ *function*), 1525
pvTimerGetTimerID (C++ *function*), 1578
pxTaskGetStackStart (C++ *function*), 1524

Q

QueueHandle_t (C++ *type*), 1560
QueueSetHandle_t (C++ *type*), 1560
QueueSetMemberHandle_t (C++ *type*), 1560

R

R0 (C *macro*), 2320
R1 (C *macro*), 2320
R2 (C *macro*), 2320
R3 (C *macro*), 2320
RD_REG_PERIPH_RTC_CNTL (C *macro*), 2321
RD_REG_PERIPH_RTC_I2C (C *macro*), 2321
RD_REG_PERIPH_RTC_IO (C *macro*), 2321
RD_REG_PERIPH_SENS (C *macro*), 2321
RingbufferType_t (C++ *enum*), 1635
RingbufferType_t::RINGBUF_TYPE_ALLOWSPLIT (C++ *enumerator*), 1635
RingbufferType_t::RINGBUF_TYPE_BYTEBUF (C++ *enumerator*), 1635
RingbufferType_t::RINGBUF_TYPE_MAX (C++ *enumerator*), 1635

RingbufferType_t::RINGBUF_TYPE_NOSPLIT (C++ enumerator), 1635
RingbufHandle_t (C++ type), 1635
rmt_carrier_level_t (C++ enum), 1004
rmt_carrier_level_t::RMT_CARRIER_LEVEL_HIGH (C++ enumerator), 1004
rmt_carrier_level_t::RMT_CARRIER_LEVEL_LOW (C++ enumerator), 1004
rmt_carrier_level_t::RMT_CARRIER_LEVEL_MAX (C++ enumerator), 1004
RMT_CHANNEL_FLAGS_AWARE_DFS (C macro), 1001
RMT_CHANNEL_FLAGS_INVERT_SIG (C macro), 1001
rmt_channel_status_result_t (C++ struct), 1002
rmt_channel_status_result_t::status (C++ member), 1002
rmt_channel_status_t (C++ enum), 1004
rmt_channel_status_t::RMT_CHANNEL_BUSY (C++ enumerator), 1004
rmt_channel_status_t::RMT_CHANNEL_IDLE (C++ enumerator), 1004
rmt_channel_status_t::RMT_CHANNEL_UNINIT (C++ enumerator), 1004
rmt_channel_t (C++ enum), 1002
rmt_channel_t::RMT_CHANNEL_0 (C++ enumerator), 1002
rmt_channel_t::RMT_CHANNEL_1 (C++ enumerator), 1002
rmt_channel_t::RMT_CHANNEL_2 (C++ enumerator), 1002
rmt_channel_t::RMT_CHANNEL_3 (C++ enumerator), 1002
rmt_channel_t::RMT_CHANNEL_4 (C++ enumerator), 1002
rmt_channel_t::RMT_CHANNEL_5 (C++ enumerator), 1002
rmt_channel_t::RMT_CHANNEL_6 (C++ enumerator), 1002
rmt_channel_t::RMT_CHANNEL_7 (C++ enumerator), 1002
rmt_channel_t::RMT_CHANNEL_MAX (C++ enumerator), 1002
rmt_clr_intr_enable_mask (C++ function), 999
rmt_config (C++ function), 995
rmt_config_t (C++ struct), 1000
rmt_config_t::channel (C++ member), 1000
rmt_config_t::clk_div (C++ member), 1000
rmt_config_t::flags (C++ member), 1000
rmt_config_t::gpio_num (C++ member), 1000
rmt_config_t::mem_block_num (C++ member), 1000
rmt_config_t::rmt_mode (C++ member), 1000
rmt_config_t::rx_config (C++ member), 1000
rmt_config_t::tx_config (C++ member), 1000
rmt_data_mode_t (C++ enum), 1003
rmt_data_mode_t::RMT_DATA_MODE_FIFO (C++ enumerator), 1003
rmt_data_mode_t::RMT_DATA_MODE_MAX (C++ enumerator), 1003
rmt_data_mode_t::RMT_DATA_MODE_MEM (C++ enumerator), 1003
RMT_DEFAULT_CONFIG_RX (C macro), 1001
RMT_DEFAULT_CONFIG_TX (C macro), 1001
rmt_driver_install (C++ function), 996
rmt_driver_uninstall (C++ function), 996
rmt_fill_tx_items (C++ function), 996
rmt_get_channel_status (C++ function), 996
rmt_get_clk_div (C++ function), 989
rmt_get_counter_clock (C++ function), 996
rmt_get_idle_level (C++ function), 994
rmt_get_mem_block_num (C++ function), 990
rmt_get_mem_pd (C++ function), 991
rmt_get_memory_owner (C++ function), 992
rmt_get_ringbuf_handle (C++ function), 997
rmt_get_rx_idle_thresh (C++ function), 990
rmt_get_source_clk (C++ function), 993
rmt_get_status (C++ function), 994
rmt_get_tx_loop_mode (C++ function), 993
rmt_idle_level_t (C++ enum), 1003
rmt_idle_level_t::RMT_IDLE_LEVEL_HIGH (C++ enumerator), 1004
rmt_idle_level_t::RMT_IDLE_LEVEL_LOW (C++ enumerator), 1003
rmt_idle_level_t::RMT_IDLE_LEVEL_MAX (C++ enumerator), 1004
rmt_isr_deregister (C++ function), 995
rmt_isr_handle_t (C++ type), 1001
rmt_isr_register (C++ function), 995
RMT_MEM_ITEM_NUM (C macro), 1001
rmt_mem_owner_t (C++ enum), 1002
rmt_mem_owner_t::RMT_MEM_OWNER_MAX (C++ enumerator), 1003
rmt_mem_owner_t::RMT_MEM_OWNER_RX (C++ enumerator), 1002
rmt_mem_owner_t::RMT_MEM_OWNER_TX (C++ enumerator), 1002
rmt_memory_rw_rst (C++ function), 998
rmt_mode_t (C++ enum), 1003
rmt_mode_t::RMT_MODE_MAX (C++ enumerator), 1003
rmt_mode_t::RMT_MODE_RX (C++ enumerator), 1003
rmt_mode_t::RMT_MODE_TX (C++ enumerator), 1003
rmt_register_tx_end_callback (C++ function), 998
rmt_rx_config_t (C++ struct), 999
rmt_rx_config_t::filter_en (C++ member), 1000
rmt_rx_config_t::filter_ticks_thresh (C++ member), 1000

rmt_rx_config_t::idle_threshold (C++ member), 1000
rmt_rx_memory_reset (C++ function), 992
rmt_rx_start (C++ function), 992
rmt_rx_stop (C++ function), 992
rmt_set_clk_div (C++ function), 989
rmt_set_err_intr_en (C++ function), 994
rmt_set_gpio (C++ function), 995
rmt_set_idle_level (C++ function), 994
rmt_set_intr_enable_mask (C++ function), 999
rmt_set_mem_block_num (C++ function), 990
rmt_set_mem_pd (C++ function), 991
rmt_set_memory_owner (C++ function), 992
rmt_set_pin (C++ function), 999
rmt_set_rx_filter (C++ function), 993
rmt_set_rx_idle_thresh (C++ function), 990
rmt_set_rx_intr_en (C++ function), 994
rmt_set_source_clk (C++ function), 993
rmt_set_tx_carrier (C++ function), 991
rmt_set_tx_intr_en (C++ function), 994
rmt_set_tx_loop_mode (C++ function), 993
rmt_set_tx_thr_intr_en (C++ function), 995
rmt_source_clk_t (C++ enum), 1003
rmt_source_clk_t::RMT_BASECLK_APB (C++ enumerator), 1003
rmt_source_clk_t::RMT_BASECLK_MAX (C++ enumerator), 1003
rmt_source_clk_t::RMT_BASECLK_REF (C++ enumerator), 1003
rmt_translator_get_context (C++ function), 998
rmt_translator_init (C++ function), 997
rmt_translator_set_context (C++ function), 998
rmt_tx_config_t (C++ struct), 999
rmt_tx_config_t::carrier_duty_percent (C++ member), 999
rmt_tx_config_t::carrier_en (C++ member), 999
rmt_tx_config_t::carrier_freq_hz (C++ member), 999
rmt_tx_config_t::carrier_level (C++ member), 999
rmt_tx_config_t::idle_level (C++ member), 999
rmt_tx_config_t::idle_output_en (C++ member), 999
rmt_tx_config_t::loop_en (C++ member), 999
rmt_tx_end_callback_t (C++ struct), 1000
rmt_tx_end_callback_t::arg (C++ member), 1000
rmt_tx_end_callback_t::function (C++ member), 1000
rmt_tx_end_fn_t (C++ type), 1001
rmt_tx_memory_reset (C++ function), 992
rmt_tx_start (C++ function), 991
rmt_tx_stop (C++ function), 991
rmt_wait_tx_done (C++ function), 997
rmt_write_items (C++ function), 997
rmt_write_sample (C++ function), 998
rtc_gpio_deinit (C++ function), 877
rtc_gpio_force_hold_all (C++ function), 880
rtc_gpio_force_hold_dis_all (C++ function), 880
rtc_gpio_get_drive_capability (C++ function), 879
rtc_gpio_get_level (C++ function), 877
rtc_gpio_hold_dis (C++ function), 879
rtc_gpio_hold_en (C++ function), 879
rtc_gpio_init (C++ function), 877
RTC_GPIO_IS_VALID_GPIO (C macro), 880
rtc_gpio_is_valid_gpio (C++ function), 877
rtc_gpio_isolate (C++ function), 879
rtc_gpio_mode_t (C++ enum), 880
rtc_gpio_mode_t::RTC_GPIO_MODE_DISABLED (C++ enumerator), 880
rtc_gpio_mode_t::RTC_GPIO_MODE_INPUT_ONLY (C++ enumerator), 880
rtc_gpio_mode_t::RTC_GPIO_MODE_INPUT_OUTPUT (C++ enumerator), 880
rtc_gpio_mode_t::RTC_GPIO_MODE_INPUT_OUTPUT_OD (C++ enumerator), 881
rtc_gpio_mode_t::RTC_GPIO_MODE_OUTPUT_OD (C++ enumerator), 881
rtc_gpio_mode_t::RTC_GPIO_MODE_OUTPUT_ONLY (C++ enumerator), 880
rtc_gpio_pulldown_dis (C++ function), 878
rtc_gpio_pulldown_en (C++ function), 878
rtc_gpio_pullup_dis (C++ function), 878
rtc_gpio_pullup_en (C++ function), 878
rtc_gpio_set_direction (C++ function), 878
rtc_gpio_set_direction_in_sleep (C++ function), 878
rtc_gpio_set_drive_capability (C++ function), 879
rtc_gpio_set_level (C++ function), 877
rtc_gpio_wakeup_disable (C++ function), 880
rtc_gpio_wakeup_enable (C++ function), 880
rtc_io_number_get (C++ function), 877
RTC_SLOW_MEM (C macro), 2328

S

sample_to_rmt_t (C++ type), 1001
sdio_event_cb_t (C++ type), 1028
sdio_slave_buf_handle_t (C++ type), 1028
sdio_slave_clear_host_int (C++ function), 1027
sdio_slave_config_t (C++ struct), 1027
sdio_slave_config_t::event_cb (C++ member), 1028
sdio_slave_config_t::flags (C++ member), 1028
sdio_slave_config_t::recv_buffer_size (C++ member), 1028

sdio_slave_config_t::send_queue_size (*C++ member*), 1028
sdio_slave_config_t::sending_mode (*C++ member*), 1027
sdio_slave_config_t::timing (*C++ member*), 1027
sdio_slave_deinit (*C++ function*), 1024
SDIO_SLAVE_FLAG_DAT2_DISABLED (*C macro*), 1028
SDIO_SLAVE_FLAG_HOST_INTR_DISABLED (*C macro*), 1028
SDIO_SLAVE_FLAG_INTERNAL_PULLUP (*C macro*), 1028
sdio_slave_get_host_intena (*C++ function*), 1027
sdio_slave_hostint_t (*C++ enum*), 1023
sdio_slave_hostint_t::SDIO_SLAVE_HOSTINT_BIT0 (*C++ enumerator*), 1023
sdio_slave_hostint_t::SDIO_SLAVE_HOSTINT_BIT1 (*C++ enumerator*), 1023
sdio_slave_hostint_t::SDIO_SLAVE_HOSTINT_BIT2 (*C++ enumerator*), 1023
sdio_slave_hostint_t::SDIO_SLAVE_HOSTINT_BIT3 (*C++ enumerator*), 1023
sdio_slave_hostint_t::SDIO_SLAVE_HOSTINT_BIT4 (*C++ enumerator*), 1023
sdio_slave_hostint_t::SDIO_SLAVE_HOSTINT_BIT5 (*C++ enumerator*), 1023
sdio_slave_hostint_t::SDIO_SLAVE_HOSTINT_BIT6 (*C++ enumerator*), 1023
sdio_slave_hostint_t::SDIO_SLAVE_HOSTINT_BIT7 (*C++ enumerator*), 1023
sdio_slave_hostint_t::SDIO_SLAVE_HOSTINT_SEND_NEW_PACKET (*C++ enumerator*), 1023
sdio_slave_initialize (*C++ function*), 1024
sdio_slave_read_reg (*C++ function*), 1026
sdio_slave_recv (*C++ function*), 1025
sdio_slave_recv_get_buf (*C++ function*), 1026
sdio_slave_recv_load_buf (*C++ function*), 1025
SDIO_SLAVE_RECV_MAX_BUFFER (*C macro*), 1028
sdio_slave_recv_packet (*C++ function*), 1025
sdio_slave_recv_register_buf (*C++ function*), 1024
sdio_slave_recv_unregister_buf (*C++ function*), 1024
sdio_slave_reset (*C++ function*), 1024
sdio_slave_send_get_finished (*C++ function*), 1026
sdio_slave_send_host_int (*C++ function*), 1027
sdio_slave_send_queue (*C++ function*), 1026
sdio_slave_sending_mode_t (*C++ enum*), 1023
sdio_slave_sending_mode_t::SDIO_SLAVE_SEND_PACKET (*C++ enumerator*), 1023
sdio_slave_sending_mode_t::SDIO_SLAVE_SEND_STREAM (*C++ enumerator*), 1023
sdio_slave_set_host_intena (*C++ function*), 1027
sdio_slave_start (*C++ function*), 1024
sdio_slave_stop (*C++ function*), 1024
sdio_slave_timing_t (*C++ enum*), 1023
sdio_slave_timing_t::SDIO_SLAVE_TIMING_NSEND_NSAM (*C++ enumerator*), 1023
sdio_slave_timing_t::SDIO_SLAVE_TIMING_NSEND_PSAM (*C++ enumerator*), 1023
sdio_slave_timing_t::SDIO_SLAVE_TIMING_PSEND_NSAM (*C++ enumerator*), 1023
sdio_slave_timing_t::SDIO_SLAVE_TIMING_PSEND_PSAM (*C++ enumerator*), 1023
sdio_slave_transmit (*C++ function*), 1026
sdio_slave_wait_int (*C++ function*), 1027
sdio_slave_write_reg (*C++ function*), 1026
sdmmc_card_init (*C++ function*), 1378
sdmmc_card_print_info (*C++ function*), 1378
sdmmc_card_t (*C++ struct*), 1385
sdmmc_card_t::cid (*C++ member*), 1385
sdmmc_card_t::csd (*C++ member*), 1385
sdmmc_card_t::ext_csd (*C++ member*), 1385
sdmmc_card_t::host (*C++ member*), 1385
sdmmc_card_t::is_ddr (*C++ member*), 1386
sdmmc_card_t::is_mem (*C++ member*), 1385
sdmmc_card_t::is_mmc (*C++ member*), 1386
sdmmc_card_t::is_sdio (*C++ member*), 1386
sdmmc_card_t::log_bus_width (*C++ member*), 1386
sdmmc_card_t::max_freq_khz (*C++ member*), 1385
sdmmc_card_t::num_io_functions (*C++ member*), 1386
sdmmc_card_t::ocr (*C++ member*), 1385
sdmmc_card_t::raw_cid (*C++ member*), 1385
sdmmc_card_t::rca (*C++ member*), 1385
sdmmc_card_t::reserved (*C++ member*), 1386
sdmmc_card_t::scr (*C++ member*), 1385
sdmmc_cid_t (*C++ struct*), 1382
sdmmc_cid_t::date (*C++ member*), 1382
sdmmc_cid_t::mfg_id (*C++ member*), 1382
sdmmc_cid_t::name (*C++ member*), 1382
sdmmc_cid_t::oem_id (*C++ member*), 1382
sdmmc_cid_t::revision (*C++ member*), 1382
sdmmc_cid_t::serial (*C++ member*), 1382
sdmmc_command_t (*C++ struct*), 1383
sdmmc_command_t::arg (*C++ member*), 1383
sdmmc_command_t::blklen (*C++ member*), 1383
sdmmc_command_t::data (*C++ member*), 1383
sdmmc_command_t::datalen (*C++ member*), 1383
sdmmc_command_t::error (*C++ member*), 1384
sdmmc_command_t::flags (*C++ member*), 1384
sdmmc_command_t::opcode (*C++ member*), 1383

sdmmc_command_t::response (C++ member), 1383
sdmmc_command_t::timeout_ms (C++ member), 1384
sdmmc_csd_t (C++ struct), 1381
sdmmc_csd_t::capacity (C++ member), 1382
sdmmc_csd_t::card_command_class (C++ member), 1382
sdmmc_csd_t::csd_ver (C++ member), 1382
sdmmc_csd_t::mmc_ver (C++ member), 1382
sdmmc_csd_t::read_block_len (C++ member), 1382
sdmmc_csd_t::sector_size (C++ member), 1382
sdmmc_csd_t::tr_speed (C++ member), 1382
sdmmc_ext_csd_t (C++ struct), 1383
sdmmc_ext_csd_t::power_class (C++ member), 1383
SDMMC_FREQ_26M (C macro), 1387
SDMMC_FREQ_52M (C macro), 1386
SDMMC_FREQ_DEFAULT (C macro), 1386
SDMMC_FREQ_HIGHSPEED (C macro), 1386
SDMMC_FREQ_PROBING (C macro), 1386
sdmmc_get_status (C++ function), 1378
SDMMC_HOST_DEFAULT (C macro), 1013
sdmmc_host_deinit (C++ function), 1012
sdmmc_host_do_transaction (C++ function), 1011
SDMMC_HOST_FLAG_1BIT (C macro), 1386
SDMMC_HOST_FLAG_4BIT (C macro), 1386
SDMMC_HOST_FLAG_8BIT (C macro), 1386
SDMMC_HOST_FLAG_DDR (C macro), 1386
SDMMC_HOST_FLAG_DEINIT_ARG (C macro), 1386
SDMMC_HOST_FLAG_SPI (C macro), 1386
sdmmc_host_get_slot_width (C++ function), 1011
sdmmc_host_init (C++ function), 1010
sdmmc_host_init_slot (C++ function), 1010
sdmmc_host_io_int_enable (C++ function), 1012
sdmmc_host_io_int_wait (C++ function), 1012
sdmmc_host_pullup_en (C++ function), 1012
sdmmc_host_set_bus_ddr_mode (C++ function), 1011
sdmmc_host_set_bus_width (C++ function), 1010
sdmmc_host_set_card_clk (C++ function), 1011
SDMMC_HOST_SLOT_0 (C macro), 1013
SDMMC_HOST_SLOT_1 (C macro), 1013
sdmmc_host_t (C++ struct), 1384
sdmmc_host_t::command_timeout_ms (C++ member), 1385
sdmmc_host_t::deinit (C++ member), 1384
sdmmc_host_t::deinit_p (C++ member), 1385
sdmmc_host_t::do_transaction (C++ member), 1384
sdmmc_host_t::flags (C++ member), 1384
sdmmc_host_t::get_bus_width (C++ member), 1384
sdmmc_host_t::init (C++ member), 1384
sdmmc_host_t::io_int_enable (C++ member), 1385
sdmmc_host_t::io_int_wait (C++ member), 1385
sdmmc_host_t::io_voltage (C++ member), 1384
sdmmc_host_t::max_freq_khz (C++ member), 1384
sdmmc_host_t::set_bus_ddr_mode (C++ member), 1384
sdmmc_host_t::set_bus_width (C++ member), 1384
sdmmc_host_t::set_card_clk (C++ member), 1384
sdmmc_host_t::slot (C++ member), 1384
sdmmc_io_enable_int (C++ function), 1380
sdmmc_io_get_cis_data (C++ function), 1381
sdmmc_io_print_cis_info (C++ function), 1381
sdmmc_io_read_blocks (C++ function), 1380
sdmmc_io_read_byte (C++ function), 1379
sdmmc_io_read_bytes (C++ function), 1379
sdmmc_io_wait_int (C++ function), 1380
sdmmc_io_write_blocks (C++ function), 1380
sdmmc_io_write_byte (C++ function), 1379
sdmmc_io_write_bytes (C++ function), 1379
sdmmc_read_sectors (C++ function), 1378
sdmmc_response_t (C++ type), 1387
sdmmc_scr_t (C++ struct), 1382
sdmmc_scr_t::bus_width (C++ member), 1383
sdmmc_scr_t::sd_spec (C++ member), 1383
SDMMC_SLOT_CONFIG_DEFAULT (C macro), 1013
sdmmc_slot_config_t (C++ struct), 1012
sdmmc_slot_config_t::cd (C++ member), 1013
sdmmc_slot_config_t::flags (C++ member), 1013
sdmmc_slot_config_t::gpio_cd (C++ member), 1013
sdmmc_slot_config_t::gpio_wp (C++ member), 1013
sdmmc_slot_config_t::width (C++ member), 1013
sdmmc_slot_config_t::wp (C++ member), 1013
SDMMC_SLOT_FLAG_INTERNAL_PULLUP (C macro), 1013
SDMMC_SLOT_NO_CD (C macro), 1013
SDMMC_SLOT_NO_WP (C macro), 1013
SDMMC_SLOT_WIDTH_DEFAULT (C macro), 1013
sdmmc_switch_func_rsp_t (C++ struct), 1383
sdmmc_switch_func_rsp_t::data (C++ member), 1383
sdmmc_write_sectors (C++ function), 1378
SDSPI_DEFAULT_DMA (C macro), 1018

SDSPI_DEFAULT_HOST (*C macro*), 1018
sdspi_dev_handle_t (*C++ type*), 1018
SDSPI_DEVICE_CONFIG_DEFAULT (*C macro*), 1018
sdspi_device_config_t (*C++ struct*), 1017
sdspi_device_config_t::gpio_cd (*C++ member*), 1017
sdspi_device_config_t::gpio_cs (*C++ member*), 1017
sdspi_device_config_t::gpio_int (*C++ member*), 1017
sdspi_device_config_t::gpio_wp (*C++ member*), 1017
sdspi_device_config_t::host_id (*C++ member*), 1017
SDSPI_HOST_DEFAULT (*C macro*), 1018
sdspi_host_deinit (*C++ function*), 1016
sdspi_host_do_transaction (*C++ function*), 1015
sdspi_host_init (*C++ function*), 1015
sdspi_host_init_device (*C++ function*), 1015
sdspi_host_init_slot (*C++ function*), 1016
sdspi_host_io_int_enable (*C++ function*), 1016
sdspi_host_io_int_wait (*C++ function*), 1016
sdspi_host_remove_device (*C++ function*), 1015
sdspi_host_set_card_clk (*C++ function*), 1016
SDSPI_SLOT_CONFIG_DEFAULT (*C macro*), 1018
sdspi_slot_config_t (*C++ struct*), 1017
sdspi_slot_config_t::dma_channel (*C++ member*), 1018
sdspi_slot_config_t::gpio_cd (*C++ member*), 1017
sdspi_slot_config_t::gpio_cs (*C++ member*), 1017
sdspi_slot_config_t::gpio_int (*C++ member*), 1017
sdspi_slot_config_t::gpio_miso (*C++ member*), 1018
sdspi_slot_config_t::gpio_mosi (*C++ member*), 1018
sdspi_slot_config_t::gpio_sck (*C++ member*), 1018
sdspi_slot_config_t::gpio_wp (*C++ member*), 1017
SDSPI_SLOT_NO_CD (*C macro*), 1018
SDSPI_SLOT_NO_INT (*C macro*), 1018
SDSPI_SLOT_NO_WP (*C macro*), 1018
SemaphoreHandle_t (*C++ type*), 1574
semBINARY_SEMAPHORE_QUEUE_LENGTH (*C macro*), 1561
semGIVE_BLOCK_TIME (*C macro*), 1561
semSEMAPHORE_QUEUE_ITEM_LENGTH (*C macro*), 1561
shared_stack_function (*C++ type*), 1675
shutdown_handler_t (*C++ type*), 1692
sigmadelta_channel_t (*C++ enum*), 1031
sigmadelta_channel_t::SIGMADELTA_CHANNEL_0 (*C++ enumerator*), 1031
sigmadelta_channel_t::SIGMADELTA_CHANNEL_1 (*C++ enumerator*), 1031
sigmadelta_channel_t::SIGMADELTA_CHANNEL_2 (*C++ enumerator*), 1031
sigmadelta_channel_t::SIGMADELTA_CHANNEL_3 (*C++ enumerator*), 1031
sigmadelta_channel_t::SIGMADELTA_CHANNEL_4 (*C++ enumerator*), 1032
sigmadelta_channel_t::SIGMADELTA_CHANNEL_5 (*C++ enumerator*), 1032
sigmadelta_channel_t::SIGMADELTA_CHANNEL_6 (*C++ enumerator*), 1032
sigmadelta_channel_t::SIGMADELTA_CHANNEL_7 (*C++ enumerator*), 1032
sigmadelta_channel_t::SIGMADELTA_CHANNEL_MAX (*C++ enumerator*), 1032
sigmadelta_config (*C++ function*), 1030
sigmadelta_config_t (*C++ struct*), 1031
sigmadelta_config_t::channel (*C++ member*), 1031
sigmadelta_config_t::sigmadelta_duty (*C++ member*), 1031
sigmadelta_config_t::sigmadelta_gpio (*C++ member*), 1031
sigmadelta_config_t::sigmadelta_prescale (*C++ member*), 1031
sigmadelta_port_t (*C++ enum*), 1031
sigmadelta_port_t::SIGMADELTA_PORT_0 (*C++ enumerator*), 1031
sigmadelta_port_t::SIGMADELTA_PORT_MAX (*C++ enumerator*), 1031
sigmadelta_set_duty (*C++ function*), 1030
sigmadelta_set_pin (*C++ function*), 1030
sigmadelta_set_prescale (*C++ function*), 1030
slave_transaction_cb_t (*C++ type*), 1064
smartconfig_event_got_ssid_pswd_t (*C++ struct*), 718
smartconfig_event_got_ssid_pswd_t::bssid (*C++ member*), 718
smartconfig_event_got_ssid_pswd_t::bssid_set (*C++ member*), 718
smartconfig_event_got_ssid_pswd_t::cellphone_ip (*C++ member*), 718
smartconfig_event_got_ssid_pswd_t::password (*C++ member*), 718
smartconfig_event_got_ssid_pswd_t::ssid (*C++ member*), 718
smartconfig_event_got_ssid_pswd_t::token (*C++ member*), 718
smartconfig_event_got_ssid_pswd_t::type (*C++ member*), 718
smartconfig_event_t (*C++ enum*), 719
smartconfig_event_t::SC_EVENT_FOUND_CHANNEL (*C++ enumerator*), 719

smartconfig_event_t::SC_EVENT_GOT_SSID_PSWD (C++ enumerator), 719
smartconfig_event_t::SC_EVENT_SCAN_DONE (C++ enumerator), 719
smartconfig_event_t::SC_EVENT_SEND_ACK_DONE (C++ enumerator), 719
SMARTCONFIG_START_CONFIG_DEFAULT (C macro), 719
smartconfig_start_config_t (C++ struct), 718
smartconfig_start_config_t::enable_log (C++ member), 719
smartconfig_start_config_t::esp_touch_v2_enable_crypt (C++ member), 719
smartconfig_start_config_t::esp_touch_v2_key (C++ member), 719
smartconfig_type_t (C++ enum), 719
smartconfig_type_t::SC_TYPE_AIRKISS (C++ enumerator), 719
smartconfig_type_t::SC_TYPE_ESPTOUCH (C++ enumerator), 719
smartconfig_type_t::SC_TYPE_ESPTOUCH_AIRKISS (C++ enumerator), 719
smartconfig_type_t::SC_TYPE_ESPTOUCH_V2 (C++ enumerator), 719
sntp_get_sync_interval (C++ function), 1734
sntp_get_sync_mode (C++ function), 1733
sntp_get_sync_status (C++ function), 1733
sntp_restart (C++ function), 1734
sntp_set_sync_interval (C++ function), 1734
sntp_set_sync_mode (C++ function), 1733
sntp_set_sync_status (C++ function), 1733
sntp_set_time_sync_notification_cb (C++ function), 1734
sntp_sync_mode_t (C++ enum), 1734
sntp_sync_mode_t::SNTP_SYNC_MODE_IMMED (C++ enumerator), 1734
sntp_sync_mode_t::SNTP_SYNC_MODE_SMOOTH (C++ enumerator), 1734
sntp_sync_status_t (C++ enum), 1734
sntp_sync_status_t::SNTP_SYNC_STATUS_COMPLETED (C++ enumerator), 1734
sntp_sync_status_t::SNTP_SYNC_STATUS_IN_PROGRESS (C++ enumerator), 1734
sntp_sync_status_t::SNTP_SYNC_STATUS_RESET (C++ enumerator), 1734
sntp_sync_time (C++ function), 1733
sntp_sync_time_cb_t (C++ type), 1734
SOC_REG_TO_ULP_PERIPH_SEL (C++ function), 2316
spi_bus_add_device (C++ function), 1048
spi_bus_add_flash_device (C++ function), 1393
spi_bus_config_t (C++ struct), 1045
spi_bus_config_t::data0_io_num (C++ member), 1045
spi_bus_config_t::data1_io_num (C++ member), 1045
spi_bus_config_t::data2_io_num (C++ member), 1045
spi_bus_config_t::data3_io_num (C++ member), 1045
spi_bus_config_t::data4_io_num (C++ member), 1045
spi_bus_config_t::data5_io_num (C++ member), 1045
spi_bus_config_t::data6_io_num (C++ member), 1046
spi_bus_config_t::data7_io_num (C++ member), 1046
spi_bus_config_t::flags (C++ member), 1046
spi_bus_config_t::intr_flags (C++ member), 1046
spi_bus_config_t::max_transfer_sz (C++ member), 1046
spi_bus_config_t::miso_io_num (C++ member), 1045
spi_bus_config_t::mosi_io_num (C++ member), 1045
spi_bus_config_t::quadhd_io_num (C++ member), 1045
spi_bus_config_t::quadwp_io_num (C++ member), 1045
spi_bus_config_t::sclk_io_num (C++ member), 1045
spi_bus_free (C++ function), 1044
spi_bus_initialize (C++ function), 1044
spi_bus_remove_device (C++ function), 1048
spi_bus_remove_flash_device (C++ function), 1393
spi_cal_clock (C++ function), 1051
spi_command_t (C++ enum), 1043
spi_command_t::SPI_CMD_HD_EN_QPI (C++ enumerator), 1043
spi_command_t::SPI_CMD_HD_INT0 (C++ enumerator), 1044
spi_command_t::SPI_CMD_HD_INT1 (C++ enumerator), 1044
spi_command_t::SPI_CMD_HD_INT2 (C++ enumerator), 1044
spi_command_t::SPI_CMD_HD_RDBUF (C++ enumerator), 1043
spi_command_t::SPI_CMD_HD_RDDMA (C++ enumerator), 1043
spi_command_t::SPI_CMD_HD_SEG_END (C++ enumerator), 1043
spi_command_t::SPI_CMD_HD_WR_END (C++ enumerator), 1044
spi_command_t::SPI_CMD_HD_WRBUF (C++ enumerator), 1043
spi_command_t::SPI_CMD_HD_WRDMA (C++ enumerator), 1043
spi_common_dma_t (C++ enum), 1047
spi_common_dma_t::SPI_DMA_CH1 (C++ enumerator), 1047

spi_common_dma_t::SPI_DMA_CH2 (*C++ enumerator*), 1048
spi_common_dma_t::SPI_DMA_CH_AUTO (*C++ enumerator*), 1048
spi_common_dma_t::SPI_DMA_DISABLED (*C++ enumerator*), 1047
SPI_DEVICE_3WIRE (*C macro*), 1055
spi_device_acquire_bus (*C++ function*), 1050
SPI_DEVICE_BIT_LSBFIRST (*C macro*), 1055
SPI_DEVICE_CLK_AS_CS (*C macro*), 1055
SPI_DEVICE_DDRCLK (*C macro*), 1055
spi_device_get_trans_result (*C++ function*), 1049
SPI_DEVICE_HALFDUPLEX (*C macro*), 1055
spi_device_handle_t (*C++ type*), 1056
spi_device_interface_config_t (*C++ struct*), 1052
spi_device_interface_config_t::address_bits (*C++ member*), 1052
spi_device_interface_config_t::clock_speed_hz (*C++ member*), 1052
spi_device_interface_config_t::command_bits (*C++ member*), 1052
spi_device_interface_config_t::cs_ena_posttrans (*C++ member*), 1052
spi_device_interface_config_t::cs_ena_pretrans (*C++ member*), 1052
spi_device_interface_config_t::dummy_bits (*C++ member*), 1052
spi_device_interface_config_t::duty_cycle_pos (*C++ member*), 1052
spi_device_interface_config_t::flags (*C++ member*), 1052
spi_device_interface_config_t::input_delay_ns (*C++ member*), 1052
spi_device_interface_config_t::mode (*C++ member*), 1052
spi_device_interface_config_t::post_cb (*C++ member*), 1053
spi_device_interface_config_t::pre_cb (*C++ member*), 1053
spi_device_interface_config_t::queue_size (*C++ member*), 1053
spi_device_interface_config_t::spics_io_num (*C++ member*), 1052
SPI_DEVICE_NO_DUMMY (*C macro*), 1055
spi_device_polling_end (*C++ function*), 1050
spi_device_polling_start (*C++ function*), 1049
spi_device_polling_transmit (*C++ function*), 1050
SPI_DEVICE_POSITIVE_CS (*C macro*), 1055
spi_device_queue_trans (*C++ function*), 1048
spi_device_release_bus (*C++ function*), 1051
SPI_DEVICE_RXBIT_LSBFIRST (*C macro*), 1055
spi_device_transmit (*C++ function*), 1049
SPI_DEVICE_TXBIT_LSBFIRST (*C macro*), 1055
spi_dma_chan_t (*C++ type*), 1047
spi_event_t (*C++ enum*), 1043
spi_event_t::SPI_EV_BUF_RX (*C++ enumerator*), 1043
spi_event_t::SPI_EV_BUF_TX (*C++ enumerator*), 1043
spi_event_t::SPI_EV_CMD9 (*C++ enumerator*), 1043
spi_event_t::SPI_EV_CMDA (*C++ enumerator*), 1043
spi_event_t::SPI_EV_RECV (*C++ enumerator*), 1043
spi_event_t::SPI_EV_RECV_DMA_READY (*C++ enumerator*), 1043
spi_event_t::SPI_EV_SEND (*C++ enumerator*), 1043
spi_event_t::SPI_EV_SEND_DMA_READY (*C++ enumerator*), 1043
spi_event_t::SPI_EV_TRANS (*C++ enumerator*), 1043
spi_flash_chip_t (*C++ type*), 1401
SPI_FLASH_CONFIG_CONF_BITS (*C macro*), 1405
spi_flash_encryption_t (*C++ struct*), 1402
spi_flash_encryption_t::flash_encryption_check (*C++ member*), 1403
spi_flash_encryption_t::flash_encryption_data_pre (*C++ member*), 1402
spi_flash_encryption_t::flash_encryption_destroy (*C++ member*), 1403
spi_flash_encryption_t::flash_encryption_disable (*C++ member*), 1402
spi_flash_encryption_t::flash_encryption_done (*C++ member*), 1403
spi_flash_encryption_t::flash_encryption_enable (*C++ member*), 1402
spi_flash_host_driver_s (*C++ struct*), 1403
spi_flash_host_driver_s::check_suspend (*C++ member*), 1405
spi_flash_host_driver_s::common_command (*C++ member*), 1403
spi_flash_host_driver_s::configure_host_io_mode (*C++ member*), 1404
spi_flash_host_driver_s::dev_config (*C++ member*), 1403
spi_flash_host_driver_s::erase_block (*C++ member*), 1404
spi_flash_host_driver_s::erase_chip (*C++ member*), 1403
spi_flash_host_driver_s::erase_sector (*C++ member*), 1403
spi_flash_host_driver_s::flush_cache (*C++ member*), 1405
spi_flash_host_driver_s::host_status (*C++ member*), 1404
spi_flash_host_driver_s::poll_cmd_done (*C++ member*), 1404
spi_flash_host_driver_s::program_page (*C++ member*), 1404
spi_flash_host_driver_s::read (*C++*

member), 1404
spi_flash_host_driver_s::read_data_slicer (C++ member), 1404
spi_flash_host_driver_s::read_id (C++ member), 1403
spi_flash_host_driver_s::read_status (C++ member), 1404
spi_flash_host_driver_s::resume (C++ member), 1405
spi_flash_host_driver_s::set_write_protect (C++ member), 1404
spi_flash_host_driver_s::supports_direct_read (C++ member), 1404
spi_flash_host_driver_s::supports_direct_write (C++ member), 1404
spi_flash_host_driver_s::sus_setup (C++ member), 1405
spi_flash_host_driver_s::suspend (C++ member), 1405
spi_flash_host_driver_s::write_data_slicer (C++ member), 1404
spi_flash_host_driver_t (C++ type), 1405
spi_flash_host_inst_t (C++ struct), 1403
spi_flash_host_inst_t::driver (C++ member), 1403
SPI_FLASH_OPI_FLAG (C macro), 1405
SPI_FLASH_READ_MODE_MIN (C macro), 1405
spi_flash_sus_cmd_conf (C++ struct), 1402
spi_flash_sus_cmd_conf::cmd_rdsr (C++ member), 1402
spi_flash_sus_cmd_conf::res_cmd (C++ member), 1402
spi_flash_sus_cmd_conf::reserved (C++ member), 1402
spi_flash_sus_cmd_conf::sus_cmd (C++ member), 1402
spi_flash_sus_cmd_conf::sus_mask (C++ member), 1402
SPI_FLASH_TRANS_FLAG_BYTE_SWAP (C macro), 1405
SPI_FLASH_TRANS_FLAG_CMD16 (C macro), 1405
SPI_FLASH_TRANS_FLAG_IGNORE_BASEIO (C macro), 1405
spi_flash_trans_t (C++ struct), 1401
spi_flash_trans_t::address (C++ member), 1401
spi_flash_trans_t::address_bitlen (C++ member), 1401
spi_flash_trans_t::command (C++ member), 1402
spi_flash_trans_t::dummy_bitlen (C++ member), 1402
spi_flash_trans_t::flags (C++ member), 1402
spi_flash_trans_t::io_mode (C++ member), 1402
spi_flash_trans_t::miso_data (C++ member), 1401
spi_flash_trans_t::miso_len (C++ member), 1401
spi_flash_trans_t::mosi_data (C++ member), 1401
spi_flash_trans_t::mosi_len (C++ member), 1401
spi_flash_trans_t::reserved (C++ member), 1401
SPI_FLASH_YIELD_REQ_SUSPEND (C macro), 1401
SPI_FLASH_YIELD_REQ_YIELD (C macro), 1401
SPI_FLASH_YIELD_STA_RESUME (C macro), 1401
spi_get_actual_clock (C++ function), 1051
spi_get_freq_limit (C++ function), 1051
spi_get_timing (C++ function), 1051
spi_host_device_t (C++ enum), 1042
spi_host_device_t::SPI1_HOST (C++ enumerator), 1042
spi_host_device_t::SPI2_HOST (C++ enumerator), 1042
spi_host_device_t::SPI3_HOST (C++ enumerator), 1042
spi_line_mode_t (C++ struct), 1042
spi_line_mode_t::addr_lines (C++ member), 1042
spi_line_mode_t::cmd_lines (C++ member), 1042
spi_line_mode_t::data_lines (C++ member), 1042
SPI_MASTER_FREQ_10M (C macro), 1054
SPI_MASTER_FREQ_11M (C macro), 1054
SPI_MASTER_FREQ_13M (C macro), 1054
SPI_MASTER_FREQ_16M (C macro), 1055
SPI_MASTER_FREQ_20M (C macro), 1055
SPI_MASTER_FREQ_26M (C macro), 1055
SPI_MASTER_FREQ_40M (C macro), 1055
SPI_MASTER_FREQ_80M (C macro), 1055
SPI_MASTER_FREQ_8M (C macro), 1054
SPI_MASTER_FREQ_9M (C macro), 1054
SPI_MAX_DMA_LEN (C macro), 1046
SPI_SLAVE_BIT_LSBFIRST (C macro), 1064
spi_slave_free (C++ function), 1062
spi_slave_get_trans_result (C++ function), 1062
spi_slave_initialize (C++ function), 1061
spi_slave_interface_config_t (C++ struct), 1063
spi_slave_interface_config_t::flags (C++ member), 1063
spi_slave_interface_config_t::mode (C++ member), 1063
spi_slave_interface_config_t::post_setup_cb (C++ member), 1063
spi_slave_interface_config_t::post_trans_cb (C++ member), 1063
spi_slave_interface_config_t::queue_size (C++ member), 1063
spi_slave_interface_config_t::spics_io_num

(C++ *member*), 1063
spi_slave_queue_trans (C++ *function*), 1062
SPI_SLAVE_RXBIT_LSBFIRST (C *macro*), 1064
spi_slave_transaction_t (C++ *struct*), 1064
spi_slave_transaction_t (C++ *type*), 1064
spi_slave_transaction_t::length (C++ *member*), 1064
spi_slave_transaction_t::rx_buffer (C++ *member*), 1064
spi_slave_transaction_t::trans_len (C++ *member*), 1064
spi_slave_transaction_t::tx_buffer (C++ *member*), 1064
spi_slave_transaction_t::user (C++ *member*), 1064
spi_slave_transmit (C++ *function*), 1063
SPI_SLAVE_TXBIT_LSBFIRST (C *macro*), 1064
SPI_SWAP_DATA_RX (C *macro*), 1046
SPI_SWAP_DATA_TX (C *macro*), 1046
SPI_TRANS_CS_KEEP_ACTIVE (C *macro*), 1056
SPI_TRANS_MODE_DIO (C *macro*), 1055
SPI_TRANS_MODE_DIOQIO_ADDR (C *macro*), 1056
SPI_TRANS_MODE_OCT (C *macro*), 1056
SPI_TRANS_MODE_QIO (C *macro*), 1056
SPI_TRANS_MULTILINE_ADDR (C *macro*), 1056
SPI_TRANS_MULTILINE_CMD (C *macro*), 1056
SPI_TRANS_USE_RXDATA (C *macro*), 1056
SPI_TRANS_USE_TXDATA (C *macro*), 1056
SPI_TRANS_VARIABLE_ADDR (C *macro*), 1056
SPI_TRANS_VARIABLE_CMD (C *macro*), 1056
SPI_TRANS_VARIABLE_DUMMY (C *macro*), 1056
spi_transaction_ext_t (C++ *struct*), 1054
spi_transaction_ext_t::address_bits (C++ *member*), 1054
spi_transaction_ext_t::base (C++ *member*), 1054
spi_transaction_ext_t::command_bits (C++ *member*), 1054
spi_transaction_ext_t::dummy_bits (C++ *member*), 1054
spi_transaction_t (C++ *struct*), 1053
spi_transaction_t (C++ *type*), 1056
spi_transaction_t::addr (C++ *member*), 1053
spi_transaction_t::cmd (C++ *member*), 1053
spi_transaction_t::flags (C++ *member*), 1053
spi_transaction_t::length (C++ *member*), 1053
spi_transaction_t::rx_buffer (C++ *member*), 1054
spi_transaction_t::rx_data (C++ *member*), 1054
spi_transaction_t::rxlength (C++ *member*), 1053
spi_transaction_t::tx_buffer (C++ *member*), 1054
spi_transaction_t::tx_data (C++ *member*), 1054
spi_transaction_t::user (C++ *member*), 1053
SPICOMMON_BUSFLAG_DUAL (C *macro*), 1047
SPICOMMON_BUSFLAG_GPIO_PINS (C *macro*), 1047
SPICOMMON_BUSFLAG_IO4_IO7 (C *macro*), 1047
SPICOMMON_BUSFLAG_IOMUX_PINS (C *macro*), 1047
SPICOMMON_BUSFLAG_MASTER (C *macro*), 1046
SPICOMMON_BUSFLAG_MISO (C *macro*), 1047
SPICOMMON_BUSFLAG_MOSI (C *macro*), 1047
SPICOMMON_BUSFLAG_NATIVE_PINS (C *macro*), 1047
SPICOMMON_BUSFLAG_OCTAL (C *macro*), 1047
SPICOMMON_BUSFLAG_QUAD (C *macro*), 1047
SPICOMMON_BUSFLAG_SCLK (C *macro*), 1047
SPICOMMON_BUSFLAG_SLAVE (C *macro*), 1046
SPICOMMON_BUSFLAG_WPHD (C *macro*), 1047
StaticRingbuffer_t (C++ *type*), 1635
StreamBufferHandle_t (C++ *type*), 1609
SUB_OPCODE_ALU_CNT (C *macro*), 2321
SUB_OPCODE_ALU_IMM (C *macro*), 2321
SUB_OPCODE_ALU_REG (C *macro*), 2321
SUB_OPCODE_B (C *macro*), 2323
SUB_OPCODE_BR (C *macro*), 2322
SUB_OPCODE_BS (C *macro*), 2322
SUB_OPCODE_BX (C *macro*), 2322
SUB_OPCODE_END (C *macro*), 2323
SUB_OPCODE_I2C_RD (C *macro*), 2321
SUB_OPCODE_I2C_WR (C *macro*), 2321
SUB_OPCODE_MACRO_BRANCH (C *macro*), 2323
SUB_OPCODE_MACRO_LABEL (C *macro*), 2323
SUB_OPCODE_MACRO_LABELPC (C *macro*), 2324
SUB_OPCODE_SLEEP (C *macro*), 2323
SUB_OPCODE_ST (C *macro*), 2321
system_event_ap_probe_req_rx_t (C++ *type*), 1504
SYSTEM_EVENT_AP_STA_GOT_IP6 (C *macro*), 1503
system_event_ap_staconnected_t (C++ *type*), 1503
system_event_ap_stadisconnected_t (C++ *type*), 1504
system_event_ap_staipassigned_t (C++ *type*), 1504
system_event_cb_t (C++ *type*), 1504
system_event_ftm_report_t (C++ *type*), 1504
system_event_got_ip6_t (C++ *type*), 1504
system_event_handler_t (C++ *type*), 1504
system_event_id_t (C++ *enum*), 1504
system_event_id_t::SYSTEM_EVENT_ACTION_TX_STATUS (C++ *enumerator*), 1506
system_event_id_t::SYSTEM_EVENT_AP_PROBEREQRECVED (C++ *enumerator*), 1506
system_event_id_t::SYSTEM_EVENT_AP_STACONNECTED (C++ *enumerator*), 1505

system_event_id_t::SYSTEM_EVENT_AP_STADISCONNECTED (C++ enumerator), 1505
system_event_id_t::SYSTEM_EVENT_AP_STAIPASSIGNED (C++ enumerator), 1506
system_event_id_t::SYSTEM_EVENT_AP_START (C++ enumerator), 1505
system_event_id_t::SYSTEM_EVENT_AP_STOP (C++ enumerator), 1505
system_event_id_t::SYSTEM_EVENT_ETH_CONNECTED (C++ enumerator), 1506
system_event_id_t::SYSTEM_EVENT_ETH_DISCONNECTED (C++ enumerator), 1506
system_event_id_t::SYSTEM_EVENT_ETH_GOT_IP (C++ enumerator), 1506
system_event_id_t::SYSTEM_EVENT_ETH_LOST_IP (C++ enumerator), 1506
system_event_id_t::SYSTEM_EVENT_ETH_START (C++ enumerator), 1506
system_event_id_t::SYSTEM_EVENT_ETH_STOP (C++ enumerator), 1506
system_event_id_t::SYSTEM_EVENT_FTM_REPORT (C++ enumerator), 1506
system_event_id_t::SYSTEM_EVENT_GOT_IP6 (C++ enumerator), 1506
system_event_id_t::SYSTEM_EVENT_MAX (C++ enumerator), 1506
system_event_id_t::SYSTEM_EVENT_ROC_DONE (C++ enumerator), 1506
system_event_id_t::SYSTEM_EVENT_SCAN_DONE (C++ enumerator), 1504
system_event_id_t::SYSTEM_EVENT_STA_AUTHMODE_CHANGE (C++ enumerator), 1505
system_event_id_t::SYSTEM_EVENT_STA_BEACON_TIMEOUT (C++ enumerator), 1506
system_event_id_t::SYSTEM_EVENT_STA_BSS_RSSI_LOW (C++ enumerator), 1505
system_event_id_t::SYSTEM_EVENT_STA_CONNECTED (C++ enumerator), 1505
system_event_id_t::SYSTEM_EVENT_STA_DISCONNECTED (C++ enumerator), 1505
system_event_id_t::SYSTEM_EVENT_STA_GOT_IP (C++ enumerator), 1505
system_event_id_t::SYSTEM_EVENT_STA_LOST_IP (C++ enumerator), 1505
system_event_id_t::SYSTEM_EVENT_STA_START (C++ enumerator), 1504
system_event_id_t::SYSTEM_EVENT_STA_STOP (C++ enumerator), 1505
system_event_id_t::SYSTEM_EVENT_STA_WPS_ER_FAILED (C++ enumerator), 1505
system_event_id_t::SYSTEM_EVENT_STA_WPS_ER_PBC_OVERLAP (C++ enumerator), 1505
system_event_id_t::SYSTEM_EVENT_STA_WPS_ER_PIN (C++ enumerator), 1505
system_event_id_t::SYSTEM_EVENT_STA_WPS_ER_SUCCESS (C++ enumerator), 1505
system_event_id_t::SYSTEM_EVENT_STA_WPS_ER_TIMEOUT (C++ enumerator), 1505
system_event_id_t::SYSTEM_EVENT_WIFI_READY (C++ enumerator), 1504
system_event_info_t (C++ union), 1502
system_event_info_t::ap_probereqrecved (C++ member), 1502
system_event_info_t::ap_staipassigned (C++ member), 1503
system_event_info_t::auth_change (C++ member), 1502
system_event_info_t::connected (C++ member), 1502
system_event_info_t::disconnected (C++ member), 1502
system_event_info_t::ftm_report (C++ member), 1502
system_event_info_t::got_ip (C++ member), 1502
system_event_info_t::got_ip6 (C++ member), 1503
system_event_info_t::scan_done (C++ member), 1502
system_event_info_t::sta_connected (C++ member), 1502
system_event_info_t::sta_disconnected (C++ member), 1502
system_event_info_t::sta_er_fail_reason (C++ member), 1502
system_event_info_t::sta_er_pin (C++ member), 1502
system_event_info_t::sta_er_success (C++ member), 1502
system_event_sta_authmode_change_t (C++ type), 1503
system_event_sta_connected_t (C++ type), 1503
system_event_sta_disconnected_t (C++ type), 1503
system_event_sta_got_ip_t (C++ type), 1504
system_event_sta_scan_done_t (C++ type), 1503
system_event_sta_wps_er_pin_t (C++ type), 1503
system_event_sta_wps_er_success_t (C++ type), 1503
system_event_sta_wps_fail_reason_t (C++ type), 1503
system_event_t (C++ struct), 1503
system_event_t::event_id (C++ member), 1503
system_event_t::event_info (C++ member), 1503

T

taskDISABLE_INTERRUPTS (C macro), 1538
taskENABLE_INTERRUPTS (C macro), 1538
taskENTER_CRITICAL (C macro), 1538
taskENTER_CRITICAL_FROM_ISR (C macro), 1538

taskENTER_CRITICAL_ISR (*C macro*), 1538
taskEXIT_CRITICAL (*C macro*), 1538
taskEXIT_CRITICAL_FROM_ISR (*C macro*), 1538
taskEXIT_CRITICAL_ISR (*C macro*), 1538
TaskHandle_t (*C++ type*), 1540
TaskHookFunction_t (*C++ type*), 1540
taskSCHEDULER_NOT_STARTED (*C macro*), 1538
taskSCHEDULER_RUNNING (*C macro*), 1538
taskSCHEDULER_SUSPENDED (*C macro*), 1538
taskYIELD (*C macro*), 1538
timer_alarm_t (*C++ enum*), 859
timer_alarm_t::TIMER_ALARM_DIS (*C++ enumerator*), 859
timer_alarm_t::TIMER_ALARM_EN (*C++ enumerator*), 859
timer_alarm_t::TIMER_ALARM_MAX (*C++ enumerator*), 859
timer_autoreload_t (*C++ enum*), 859
timer_autoreload_t::TIMER_AUTORELOAD_DIS (*C++ enumerator*), 859
timer_autoreload_t::TIMER_AUTORELOAD_EN (*C++ enumerator*), 859
timer_autoreload_t::TIMER_AUTORELOAD_MAX (*C++ enumerator*), 859
TIMER_BASE_CLK (*C macro*), 856
timer_config_t (*C++ struct*), 857
timer_config_t::alarm_en (*C++ member*), 857
timer_config_t::auto_reload (*C++ member*), 857
timer_config_t::counter_dir (*C++ member*), 857
timer_config_t::counter_en (*C++ member*), 857
timer_config_t::divider (*C++ member*), 857
timer_config_t::intr_type (*C++ member*), 857
timer_count_dir_t (*C++ enum*), 858
timer_count_dir_t::TIMER_COUNT_DOWN (*C++ enumerator*), 858
timer_count_dir_t::TIMER_COUNT_MAX (*C++ enumerator*), 858
timer_count_dir_t::TIMER_COUNT_UP (*C++ enumerator*), 858
timer_deinit (*C++ function*), 853
timer_disable_intr (*C++ function*), 854
timer_enable_intr (*C++ function*), 854
timer_get_alarm_value (*C++ function*), 852
timer_get_config (*C++ function*), 854
timer_get_counter_time_sec (*C++ function*), 850
timer_get_counter_value (*C++ function*), 850
timer_group_clr_intr_sta_in_isr (*C++ function*), 855
timer_group_clr_intr_status_in_isr (*C++ function*), 855
timer_group_enable_alarm_in_isr (*C++ function*), 855
timer_group_get_auto_reload_in_isr (*C++ function*), 856
timer_group_get_counter_value_in_isr (*C++ function*), 855
timer_group_get_intr_status_in_isr (*C++ function*), 855
timer_group_intr_clr_in_isr (*C++ function*), 854
timer_group_intr_disable (*C++ function*), 854
timer_group_intr_enable (*C++ function*), 854
timer_group_intr_get_in_isr (*C++ function*), 855
timer_group_set_alarm_value_in_isr (*C++ function*), 855
timer_group_set_counter_enable_in_isr (*C++ function*), 855
timer_group_t (*C++ enum*), 857
timer_group_t::TIMER_GROUP_0 (*C++ enumerator*), 857
timer_group_t::TIMER_GROUP_1 (*C++ enumerator*), 857
timer_group_t::TIMER_GROUP_MAX (*C++ enumerator*), 857
timer_idx_t (*C++ enum*), 857
timer_idx_t::TIMER_0 (*C++ enumerator*), 858
timer_idx_t::TIMER_1 (*C++ enumerator*), 858
timer_idx_t::TIMER_MAX (*C++ enumerator*), 858
timer_init (*C++ function*), 853
timer_intr_mode_t (*C++ enum*), 859
timer_intr_mode_t::TIMER_INTR_LEVEL (*C++ enumerator*), 859
timer_intr_mode_t::TIMER_INTR_MAX (*C++ enumerator*), 859
timer_intr_t (*C++ enum*), 858
timer_intr_t::TIMER_INTR_NONE (*C++ enumerator*), 858
timer_intr_t::TIMER_INTR_T0 (*C++ enumerator*), 858
timer_intr_t::TIMER_INTR_T1 (*C++ enumerator*), 858
timer_intr_t::TIMER_INTR_WDT (*C++ enumerator*), 858
timer_isr_callback_add (*C++ function*), 852
timer_isr_callback_remove (*C++ function*), 853
timer_isr_handle_t (*C++ type*), 857
timer_isr_register (*C++ function*), 853
timer_isr_t (*C++ type*), 856
timer_pause (*C++ function*), 851
timer_set_alarm (*C++ function*), 852
timer_set_alarm_value (*C++ function*), 852
timer_set_auto_reload (*C++ function*), 851
timer_set_counter_mode (*C++ function*), 851
timer_set_counter_value (*C++ function*), 850
timer_set_divider (*C++ function*), 851
timer_spinlock_give (*C++ function*), 856

timer_spinlock_take (C++ function), 856
timer_start (C++ function), 851
timer_start_t (C++ enum), 858
timer_start_t::TIMER_PAUSE (C++ enumerator), 858
timer_start_t::TIMER_START (C++ enumerator), 858
TimerCallbackFunction_t (C++ type), 1592
TimerHandle_t (C++ type), 1592
tls_keep_alive_cfg (C++ struct), 1146
tls_keep_alive_cfg::keep_alive_count (C++ member), 1146
tls_keep_alive_cfg::keep_alive_enable (C++ member), 1146
tls_keep_alive_cfg::keep_alive_idle (C++ member), 1146
tls_keep_alive_cfg::keep_alive_interval (C++ member), 1146
tls_keep_alive_cfg_t (C++ type), 1150
TlsDeleteCallbackFunction_t (C++ type), 1540
tmrCOMMAND_CHANGE_PERIOD (C macro), 1582
tmrCOMMAND_CHANGE_PERIOD_FROM_ISR (C macro), 1583
tmrCOMMAND_DELETE (C macro), 1582
tmrCOMMAND_EXECUTE_CALLBACK (C macro), 1582
tmrCOMMAND_EXECUTE_CALLBACK_FROM_ISR (C macro), 1582
tmrCOMMAND_RESET (C macro), 1582
tmrCOMMAND_RESET_FROM_ISR (C macro), 1582
tmrCOMMAND_START (C macro), 1582
tmrCOMMAND_START_DONT_TRACE (C macro), 1582
tmrCOMMAND_START_FROM_ISR (C macro), 1582
tmrCOMMAND_STOP (C macro), 1582
tmrCOMMAND_STOP_FROM_ISR (C macro), 1583
tmrFIRST_FROM_ISR_COMMAND (C macro), 1582
touch_cnt_slope_t (C++ enum), 1079
touch_cnt_slope_t::TOUCH_PAD_SLOPE_0 (C++ enumerator), 1079
touch_cnt_slope_t::TOUCH_PAD_SLOPE_1 (C++ enumerator), 1079
touch_cnt_slope_t::TOUCH_PAD_SLOPE_2 (C++ enumerator), 1080
touch_cnt_slope_t::TOUCH_PAD_SLOPE_3 (C++ enumerator), 1080
touch_cnt_slope_t::TOUCH_PAD_SLOPE_4 (C++ enumerator), 1080
touch_cnt_slope_t::TOUCH_PAD_SLOPE_5 (C++ enumerator), 1080
touch_cnt_slope_t::TOUCH_PAD_SLOPE_6 (C++ enumerator), 1080
touch_cnt_slope_t::TOUCH_PAD_SLOPE_7 (C++ enumerator), 1080
touch_cnt_slope_t::TOUCH_PAD_SLOPE_MAX (C++ enumerator), 1080
TOUCH_FSM_MODE_DEFAULT (C macro), 1077
touch_fsm_mode_t (C++ enum), 1080
touch_fsm_mode_t::TOUCH_FSM_MODE_MAX (C++ enumerator), 1080
touch_fsm_mode_t::TOUCH_FSM_MODE_SW (C++ enumerator), 1080
touch_fsm_mode_t::TOUCH_FSM_MODE_TIMER (C++ enumerator), 1080
touch_high_volt_t (C++ enum), 1078
touch_high_volt_t::TOUCH_HVOLT_2V4 (C++ enumerator), 1078
touch_high_volt_t::TOUCH_HVOLT_2V5 (C++ enumerator), 1078
touch_high_volt_t::TOUCH_HVOLT_2V6 (C++ enumerator), 1078
touch_high_volt_t::TOUCH_HVOLT_2V7 (C++ enumerator), 1078
touch_high_volt_t::TOUCH_HVOLT_KEEP (C++ enumerator), 1078
touch_high_volt_t::TOUCH_HVOLT_MAX (C++ enumerator), 1078
touch_low_volt_t (C++ enum), 1078
touch_low_volt_t::TOUCH_LVOLT_0V5 (C++ enumerator), 1079
touch_low_volt_t::TOUCH_LVOLT_0V6 (C++ enumerator), 1079
touch_low_volt_t::TOUCH_LVOLT_0V7 (C++ enumerator), 1079
touch_low_volt_t::TOUCH_LVOLT_0V8 (C++ enumerator), 1079
touch_low_volt_t::TOUCH_LVOLT_KEEP (C++ enumerator), 1079
touch_low_volt_t::TOUCH_LVOLT_MAX (C++ enumerator), 1079
TOUCH_PAD_ATTEN_VOLTAGE_THRESHOLD (C macro), 1077
TOUCH_PAD_BIT_MASK_ALL (C macro), 1077
TOUCH_PAD_BIT_MASK_MAX (C macro), 1077
touch_pad_clear_group_mask (C++ function), 1071
touch_pad_clear_status (C++ function), 1075
touch_pad_config (C++ function), 1068
touch_pad_deinit (C++ function), 1073
touch_pad_filter_delete (C++ function), 1073
touch_pad_filter_start (C++ function), 1072
touch_pad_filter_stop (C++ function), 1072
touch_pad_get_cnt_mode (C++ function), 1074
touch_pad_get_filter_period (C++ function), 1072
touch_pad_get_fsm_mode (C++ function), 1075
touch_pad_get_group_mask (C++ function), 1071
touch_pad_get_meas_time (C++ function), 1070
touch_pad_get_status (C++ function), 1075
touch_pad_get_thresh (C++ function), 1070
touch_pad_get_trigger_mode (C++ function), 1071

touch_pad_get_trigger_source (*C++ function*), 1071
touch_pad_get_voltage (*C++ function*), 1074
touch_pad_get_wakeup_status (*C++ function*), 1075
TOUCH_PAD_GPIO0_CHANNEL (*C macro*), 1076
TOUCH_PAD_GPIO12_CHANNEL (*C macro*), 1076
TOUCH_PAD_GPIO13_CHANNEL (*C macro*), 1076
TOUCH_PAD_GPIO14_CHANNEL (*C macro*), 1076
TOUCH_PAD_GPIO15_CHANNEL (*C macro*), 1076
TOUCH_PAD_GPIO27_CHANNEL (*C macro*), 1076
TOUCH_PAD_GPIO2_CHANNEL (*C macro*), 1076
TOUCH_PAD_GPIO32_CHANNEL (*C macro*), 1076
TOUCH_PAD_GPIO33_CHANNEL (*C macro*), 1076
TOUCH_PAD_GPIO4_CHANNEL (*C macro*), 1076
TOUCH_PAD_HIGH_VOLTAGE_THRESHOLD (*C macro*), 1077
TOUCH_PAD_IDLE_CH_CONNECT_DEFAULT (*C macro*), 1077
touch_pad_init (*C++ function*), 1073
touch_pad_intr_clear (*C++ function*), 1072
touch_pad_intr_disable (*C++ function*), 1072
touch_pad_intr_enable (*C++ function*), 1072
touch_pad_io_init (*C++ function*), 1073
touch_pad_isr_deregister (*C++ function*), 1075
touch_pad_isr_register (*C++ function*), 1069
TOUCH_PAD_LOW_VOLTAGE_THRESHOLD (*C macro*), 1077
touch_pad_meas_is_done (*C++ function*), 1075
TOUCH_PAD_MEASURE_CYCLE_DEFAULT (*C macro*), 1077
TOUCH_PAD_NUM0_GPIO_NUM (*C macro*), 1076
TOUCH_PAD_NUM1_GPIO_NUM (*C macro*), 1076
TOUCH_PAD_NUM2_GPIO_NUM (*C macro*), 1076
TOUCH_PAD_NUM3_GPIO_NUM (*C macro*), 1076
TOUCH_PAD_NUM4_GPIO_NUM (*C macro*), 1076
TOUCH_PAD_NUM5_GPIO_NUM (*C macro*), 1076
TOUCH_PAD_NUM6_GPIO_NUM (*C macro*), 1076
TOUCH_PAD_NUM7_GPIO_NUM (*C macro*), 1076
TOUCH_PAD_NUM8_GPIO_NUM (*C macro*), 1076
TOUCH_PAD_NUM9_GPIO_NUM (*C macro*), 1076
touch_pad_read (*C++ function*), 1068
touch_pad_read_filtered (*C++ function*), 1069
touch_pad_read_raw_data (*C++ function*), 1069
touch_pad_set_cnt_mode (*C++ function*), 1074
touch_pad_set_filter_period (*C++ function*), 1072
touch_pad_set_filter_read_cb (*C++ function*), 1069
touch_pad_set_fsm_mode (*C++ function*), 1075
touch_pad_set_group_mask (*C++ function*), 1071
touch_pad_set_meas_time (*C++ function*), 1070
touch_pad_set_thresh (*C++ function*), 1070
touch_pad_set_trigger_mode (*C++ function*), 1070
touch_pad_set_trigger_source (*C++ function*), 1071
touch_pad_set_voltage (*C++ function*), 1074
TOUCH_PAD_SLEEP_CYCLE_DEFAULT (*C macro*), 1077
TOUCH_PAD_SLOPE_DEFAULT (*C macro*), 1077
touch_pad_sw_start (*C++ function*), 1070
touch_pad_t (*C++ enum*), 1077
touch_pad_t::TOUCH_PAD_MAX (*C++ enumerator*), 1078
touch_pad_t::TOUCH_PAD_NUM0 (*C++ enumerator*), 1077
touch_pad_t::TOUCH_PAD_NUM1 (*C++ enumerator*), 1077
touch_pad_t::TOUCH_PAD_NUM2 (*C++ enumerator*), 1077
touch_pad_t::TOUCH_PAD_NUM3 (*C++ enumerator*), 1078
touch_pad_t::TOUCH_PAD_NUM4 (*C++ enumerator*), 1078
touch_pad_t::TOUCH_PAD_NUM5 (*C++ enumerator*), 1078
touch_pad_t::TOUCH_PAD_NUM6 (*C++ enumerator*), 1078
touch_pad_t::TOUCH_PAD_NUM7 (*C++ enumerator*), 1078
touch_pad_t::TOUCH_PAD_NUM8 (*C++ enumerator*), 1078
touch_pad_t::TOUCH_PAD_NUM9 (*C++ enumerator*), 1078
TOUCH_PAD_THRESHOLD_MAX (*C macro*), 1077
TOUCH_PAD_TIE_OPT_DEFAULT (*C macro*), 1077
touch_tie_opt_t (*C++ enum*), 1080
touch_tie_opt_t::TOUCH_PAD_TIE_OPT_HIGH (*C++ enumerator*), 1080
touch_tie_opt_t::TOUCH_PAD_TIE_OPT_LOW (*C++ enumerator*), 1080
touch_tie_opt_t::TOUCH_PAD_TIE_OPT_MAX (*C++ enumerator*), 1080
TOUCH_TRIGGER_MODE_DEFAULT (*C macro*), 1077
touch_trigger_mode_t (*C++ enum*), 1080
touch_trigger_mode_t::TOUCH_TRIGGER_ABOVE (*C++ enumerator*), 1081
touch_trigger_mode_t::TOUCH_TRIGGER_BELOW (*C++ enumerator*), 1081
touch_trigger_mode_t::TOUCH_TRIGGER_MAX (*C++ enumerator*), 1081
TOUCH_TRIGGER_SOURCE_DEFAULT (*C macro*), 1077
touch_trigger_src_t (*C++ enum*), 1081
touch_trigger_src_t::TOUCH_TRIGGER_SOURCE_BOTH (*C++ enumerator*), 1081
touch_trigger_src_t::TOUCH_TRIGGER_SOURCE_MAX (*C++ enumerator*), 1081
touch_trigger_src_t::TOUCH_TRIGGER_SOURCE_SET1 (*C++ enumerator*), 1081

touch_volt_atten_t (C++ enum), 1079
touch_volt_atten_t::TOUCH_HVOLT_ATTEN_0V (C++ enumerator), 1079
touch_volt_atten_t::TOUCH_HVOLT_ATTEN_0V5 (C++ enumerator), 1079
touch_volt_atten_t::TOUCH_HVOLT_ATTEN_1V (C++ enumerator), 1079
touch_volt_atten_t::TOUCH_HVOLT_ATTEN_1V5 (C++ enumerator), 1079
touch_volt_atten_t::TOUCH_HVOLT_ATTEN_KEEP (C++ enumerator), 1079
touch_volt_atten_t::TOUCH_HVOLT_ATTEN_MAX (C++ enumerator), 1079
transaction_cb_t (C++ type), 1056
tskDEFAULT_INDEX_TO_NOTIFY (C macro), 1538
tskIDLE_PRIORITY (C macro), 1538
tskKERNEL_VERSION_BUILD (C macro), 1537
tskKERNEL_VERSION_MAJOR (C macro), 1537
tskKERNEL_VERSION_MINOR (C macro), 1537
tskKERNEL_VERSION_NUMBER (C macro), 1537
tskMPU_REGION_DEVICE_MEMORY (C macro), 1538
tskMPU_REGION_EXECUTE_NEVER (C macro), 1537
tskMPU_REGION_NORMAL_MEMORY (C macro), 1538
tskMPU_REGION_READ_ONLY (C macro), 1537
tskMPU_REGION_READ_WRITE (C macro), 1537
tskNO_AFFINITY (C macro), 1538
twai_clear_receive_queue (C++ function), 1096
twai_clear_transmit_queue (C++ function), 1096
twai_driver_install (C++ function), 1093
twai_driver_uninstall (C++ function), 1093
TWAI_ERR_PASS_THRESH (C macro), 1092
TWAI_EXTD_ID_MASK (C macro), 1092
twai_filter_config_t (C++ struct), 1092
twai_filter_config_t::acceptance_code (C++ member), 1092
twai_filter_config_t::acceptance_mask (C++ member), 1092
twai_filter_config_t::single_filter (C++ member), 1092
TWAI_FRAME_EXTD_ID_LEN_BYTES (C macro), 1092
TWAI_FRAME_MAX_DLC (C macro), 1092
TWAI_FRAME_STD_ID_LEN_BYTES (C macro), 1092
twai_general_config_t (C++ struct), 1096
twai_general_config_t::alerts_enabled (C++ member), 1097
twai_general_config_t::bus_off_io (C++ member), 1097
twai_general_config_t::clkout_divider (C++ member), 1097
twai_general_config_t::clkout_io (C++ member), 1097
twai_general_config_t::intr_flags (C++ member), 1097
twai_general_config_t::mode (C++ member), 1096
twai_general_config_t::rx_io (C++ member), 1097
twai_general_config_t::rx_queue_len (C++ member), 1097
twai_general_config_t::tx_io (C++ member), 1096
twai_general_config_t::tx_queue_len (C++ member), 1097
twai_get_status_info (C++ function), 1096
twai_initiate_recovery (C++ function), 1095
TWAI_IO_UNUSED (C macro), 1098
twai_message_t (C++ struct), 1090
twai_message_t::data (C++ member), 1091
twai_message_t::data_length_code (C++ member), 1091
twai_message_t::dlc_non_comp (C++ member), 1091
twai_message_t::extd (C++ member), 1090
twai_message_t::flags (C++ member), 1091
twai_message_t::identifier (C++ member), 1091
twai_message_t::reserved (C++ member), 1091
twai_message_t::rtr (C++ member), 1091
twai_message_t::self (C++ member), 1091
twai_message_t::ss (C++ member), 1091
twai_mode_t (C++ enum), 1092
twai_mode_t::TWAI_MODE_LISTEN_ONLY (C++ enumerator), 1093
twai_mode_t::TWAI_MODE_NO_ACK (C++ enumerator), 1093
twai_mode_t::TWAI_MODE_NORMAL (C++ enumerator), 1092
twai_read_alerts (C++ function), 1095
twai_receive (C++ function), 1094
twai_reconfigure_alerts (C++ function), 1095
twai_start (C++ function), 1093
twai_state_t (C++ enum), 1098
twai_state_t::TWAI_STATE_BUS_OFF (C++ enumerator), 1098
twai_state_t::TWAI_STATE_RECOVERING (C++ enumerator), 1098
twai_state_t::TWAI_STATE_RUNNING (C++ enumerator), 1098
twai_state_t::TWAI_STATE_STOPPED (C++ enumerator), 1098
twai_status_info_t (C++ struct), 1097
twai_status_info_t::arb_lost_count (C++ member), 1098
twai_status_info_t::bus_error_count (C++ member), 1098
twai_status_info_t::msgs_to_rx (C++ member), 1097

twai_status_info_t::msgs_to_tx (C++ member), 1097
twai_status_info_t::rx_error_counter (C++ member), 1097
twai_status_info_t::rx_missed_count (C++ member), 1098
twai_status_info_t::rx_overrun_count (C++ member), 1098
twai_status_info_t::state (C++ member), 1097
twai_status_info_t::tx_error_counter (C++ member), 1097
twai_status_info_t::tx_failed_count (C++ member), 1097
TWAI_STD_ID_MASK (C macro), 1092
twai_stop (C++ function), 1094
twai_timing_config_t (C++ struct), 1091
twai_timing_config_t::brp (C++ member), 1091
twai_timing_config_t::sjw (C++ member), 1091
twai_timing_config_t::triple_sampling (C++ member), 1092
twai_timing_config_t::tseg_1 (C++ member), 1091
twai_timing_config_t::tseg_2 (C++ member), 1091
twai_transmit (C++ function), 1094

U

uart_at_cmd_t (C++ struct), 1119
uart_at_cmd_t::char_num (C++ member), 1119
uart_at_cmd_t::cmd_char (C++ member), 1119
uart_at_cmd_t::gap_tout (C++ member), 1119
uart_at_cmd_t::post_idle (C++ member), 1119
uart_at_cmd_t::pre_idle (C++ member), 1119
UART_BITRATE_MAX (C macro), 1118
uart_clear_intr_status (C++ function), 1107
uart_config_t (C++ struct), 1119
uart_config_t::baud_rate (C++ member), 1119
uart_config_t::data_bits (C++ member), 1119
uart_config_t::flow_ctrl (C++ member), 1120
uart_config_t::parity (C++ member), 1120
uart_config_t::rx_flow_ctrl_thresh (C++ member), 1120
uart_config_t::source_clk (C++ member), 1120
uart_config_t::stop_bits (C++ member), 1120
uart_config_t::use_ref_tick (C++ member), 1120
UART_CTS_GPIO19_DIRECT_CHANNEL (C macro), 1124
UART_CTS_GPIO6_DIRECT_CHANNEL (C macro), 1124
UART_CTS_GPIO8_DIRECT_CHANNEL (C macro), 1125
uart_disable_intr_mask (C++ function), 1108
uart_disable_pattern_det_intr (C++ function), 1112
uart_disable_rx_intr (C++ function), 1108
uart_disable_tx_intr (C++ function), 1108
uart_driver_delete (C++ function), 1105
uart_driver_install (C++ function), 1105
uart_enable_intr_mask (C++ function), 1107
uart_enable_pattern_det_baud_intr (C++ function), 1113
uart_enable_pattern_det_intr (C++ function), 1112
uart_enable_rx_intr (C++ function), 1108
uart_enable_tx_intr (C++ function), 1108
uart_event_t (C++ struct), 1117
uart_event_t::size (C++ member), 1117
uart_event_t::timeout_flag (C++ member), 1117
uart_event_t::type (C++ member), 1117
uart_event_type_t (C++ enum), 1118
uart_event_type_t::UART_BREAK (C++ enumerator), 1118
uart_event_type_t::UART_BUFFER_FULL (C++ enumerator), 1118
uart_event_type_t::UART_DATA (C++ enumerator), 1118
uart_event_type_t::UART_DATA_BREAK (C++ enumerator), 1118
uart_event_type_t::UART_EVENT_MAX (C++ enumerator), 1118
uart_event_type_t::UART_FIFO_OVF (C++ enumerator), 1118
uart_event_type_t::UART_FRAME_ERR (C++ enumerator), 1118
uart_event_type_t::UART_PARITY_ERR (C++ enumerator), 1118
uart_event_type_t::UART_PATTERN_DET (C++ enumerator), 1118
UART_FIFO_LEN (C macro), 1118
uart_flush (C++ function), 1111
uart_flush_input (C++ function), 1112
uart_get_baudrate (C++ function), 1106
uart_get_buffered_data_len (C++ function), 1112
uart_get_collision_flag (C++ function), 1115
uart_get_hw_flow_ctrl (C++ function), 1107
uart_get_parity (C++ function), 1106
uart_get_stop_bits (C++ function), 1106
uart_get_tx_buffer_free_size (C++ func-

tion), 1112
uart_get_wakeup_threshold (C++ function), 1116
uart_get_word_length (C++ function), 1105
UART_GPIO10_DIRECT_CHANNEL (C macro), 1124
UART_GPIO11_DIRECT_CHANNEL (C macro), 1124
UART_GPIO16_DIRECT_CHANNEL (C macro), 1124
UART_GPIO17_DIRECT_CHANNEL (C macro), 1124
UART_GPIO19_DIRECT_CHANNEL (C macro), 1123
UART_GPIO1_DIRECT_CHANNEL (C macro), 1123
UART_GPIO22_DIRECT_CHANNEL (C macro), 1123
UART_GPIO3_DIRECT_CHANNEL (C macro), 1123
UART_GPIO6_DIRECT_CHANNEL (C macro), 1124
UART_GPIO7_DIRECT_CHANNEL (C macro), 1124
UART_GPIO8_DIRECT_CHANNEL (C macro), 1124
UART_GPIO9_DIRECT_CHANNEL (C macro), 1124
uart_hw_flowcontrol_t (C++ enum), 1121
uart_hw_flowcontrol_t::UART_HW_FLOWCTRL_CTS (C++ enumerator), 1122
uart_hw_flowcontrol_t::UART_HW_FLOWCTRL_CTS_RTS (C++ enumerator), 1122
uart_hw_flowcontrol_t::UART_HW_FLOWCTRL_DISABLE (C++ enumerator), 1122
uart_hw_flowcontrol_t::UART_HW_FLOWCTRL_MAX (C++ enumerator), 1122
uart_hw_flowcontrol_t::UART_HW_FLOWCTRL_RTS (C++ enumerator), 1122
uart_intr_config (C++ function), 1110
uart_intr_config_t (C++ struct), 1117
uart_intr_config_t::intr_enable_mask (C++ member), 1117
uart_intr_config_t::rx_timeout_thresh (C++ member), 1117
uart_intr_config_t::rxfifo_full_thresh (C++ member), 1117
uart_intr_config_t::txfifo_empty_intr_thresh (C++ member), 1117
uart_is_driver_installed (C++ function), 1105
uart_isr_free (C++ function), 1109
uart_isr_handle_t (C++ type), 1118
uart_isr_register (C++ function), 1108
uart_mode_t (C++ enum), 1120
uart_mode_t::UART_MODE_IRDA (C++ enumerator), 1120
uart_mode_t::UART_MODE_RS485_APP_CTRL (C++ enumerator), 1120
uart_mode_t::UART_MODE_RS485_COLLISION_DETECT (C++ enumerator), 1120
uart_mode_t::UART_MODE_RS485_HALF_DUPLEX (C++ enumerator), 1120
uart_mode_t::UART_MODE_UART (C++ enumerator), 1120
UART_NUM_0 (C macro), 1117
UART_NUM_0_CTS_DIRECT_GPIO_NUM (C macro), 1123
UART_NUM_0_RTS_DIRECT_GPIO_NUM (C macro), 1123
UART_NUM_0_RXD_DIRECT_GPIO_NUM (C macro), 1123
UART_NUM_0_TXD_DIRECT_GPIO_NUM (C macro), 1123
UART_NUM_1 (C macro), 1117
UART_NUM_1_CTS_DIRECT_GPIO_NUM (C macro), 1124
UART_NUM_1_RTS_DIRECT_GPIO_NUM (C macro), 1124
UART_NUM_1_RXD_DIRECT_GPIO_NUM (C macro), 1124
UART_NUM_1_TXD_DIRECT_GPIO_NUM (C macro), 1124
UART_NUM_2 (C macro), 1117
UART_NUM_2_CTS_DIRECT_GPIO_NUM (C macro), 1124
UART_NUM_2_RTS_DIRECT_GPIO_NUM (C macro), 1124
UART_NUM_2_RXD_DIRECT_GPIO_NUM (C macro), 1124
UART_NUM_2_TXD_DIRECT_GPIO_NUM (C macro), 1124
UART_NUM_MAX (C macro), 1117
uart_param_config (C++ function), 1110
uart_parity_t (C++ enum), 1121
uart_parity_t::UART_PARITY_DISABLE (C++ enumerator), 1121
uart_parity_t::UART_PARITY_EVEN (C++ enumerator), 1121
uart_parity_t::UART_PARITY_ODD (C++ enumerator), 1121
uart_pattern_get_pos (C++ function), 1113
uart_pattern_pop_pos (C++ function), 1113
uart_pattern_queue_reset (C++ function), 1114
UART_PIN_NO_CHANGE (C macro), 1117
uart_port_t (C++ type), 1120
uart_read_bytes (C++ function), 1111
UART_RTS_GPIO11_DIRECT_CHANNEL (C macro), 1124
UART_RTS_GPIO22_DIRECT_CHANNEL (C macro), 1124
UART_RTS_GPIO7_DIRECT_CHANNEL (C macro), 1125
UART_RXD_GPIO16_DIRECT_CHANNEL (C macro), 1125
UART_RXD_GPIO3_DIRECT_CHANNEL (C macro), 1124
UART_RXD_GPIO9_DIRECT_CHANNEL (C macro), 1124
uart_sclk_t (C++ enum), 1122
uart_sclk_t::UART_SCLK_APB (C++ enumerator), 1123
uart_sclk_t::UART_SCLK_REF_TICK (C++ enumerator), 1123
uart_set_always_rx_timeout (C++ function), 1116
uart_set_baudrate (C++ function), 1106

uart_set_dtr (C++ function), 1109
uart_set_hw_flow_ctrl (C++ function), 1107
uart_set_line_inverse (C++ function), 1106
uart_set_loop_back (C++ function), 1116
uart_set_mode (C++ function), 1114
uart_set_parity (C++ function), 1106
uart_set_pin (C++ function), 1109
uart_set_rts (C++ function), 1109
uart_set_rx_full_threshold (C++ function), 1114
uart_set_rx_timeout (C++ function), 1115
uart_set_stop_bits (C++ function), 1106
uart_set_sw_flow_ctrl (C++ function), 1107
uart_set_tx_empty_threshold (C++ function), 1114
uart_set_tx_idle_num (C++ function), 1110
uart_set_wakeup_threshold (C++ function), 1115
uart_set_word_length (C++ function), 1105
uart_signal_inv_t (C++ enum), 1122
uart_signal_inv_t::UART_SIGNAL_CTS_INV (C++ enumerator), 1122
uart_signal_inv_t::UART_SIGNAL_DSR_INV (C++ enumerator), 1122
uart_signal_inv_t::UART_SIGNAL_DTR_INV (C++ enumerator), 1122
uart_signal_inv_t::UART_SIGNAL_INV_DISABLE (C++ enumerator), 1122
uart_signal_inv_t::UART_SIGNAL_IRDA_RX_INV (C++ enumerator), 1122
uart_signal_inv_t::UART_SIGNAL_IRDA_TX_INV (C++ enumerator), 1122
uart_signal_inv_t::UART_SIGNAL_RTS_INV (C++ enumerator), 1122
uart_signal_inv_t::UART_SIGNAL_RXD_INV (C++ enumerator), 1122
uart_signal_inv_t::UART_SIGNAL_TXD_INV (C++ enumerator), 1122
uart_stop_bits_t (C++ enum), 1121
uart_stop_bits_t::UART_STOP_BITS_1 (C++ enumerator), 1121
uart_stop_bits_t::UART_STOP_BITS_1_5 (C++ enumerator), 1121
uart_stop_bits_t::UART_STOP_BITS_2 (C++ enumerator), 1121
uart_stop_bits_t::UART_STOP_BITS_MAX (C++ enumerator), 1121
uart_sw_flowctrl_t (C++ struct), 1119
uart_sw_flowctrl_t::xoff_char (C++ member), 1119
uart_sw_flowctrl_t::xoff_thrd (C++ member), 1119
uart_sw_flowctrl_t::xon_char (C++ member), 1119
uart_sw_flowctrl_t::xon_thrd (C++ member), 1119
uart_tx_chars (C++ function), 1110
UART_TXD_GPIO10_DIRECT_CHANNEL (C macro), 1124
UART_TXD_GPIO17_DIRECT_CHANNEL (C macro), 1125
UART_TXD_GPIO1_DIRECT_CHANNEL (C macro), 1123
uart_wait_tx_done (C++ function), 1110
uart_wait_tx_idle_polling (C++ function), 1116
uart_word_length_t (C++ enum), 1120
uart_word_length_t::UART_DATA_5_BITS (C++ enumerator), 1121
uart_word_length_t::UART_DATA_6_BITS (C++ enumerator), 1121
uart_word_length_t::UART_DATA_7_BITS (C++ enumerator), 1121
uart_word_length_t::UART_DATA_8_BITS (C++ enumerator), 1121
uart_word_length_t::UART_DATA_BITS_MAX (C++ enumerator), 1121
uart_write_bytes (C++ function), 1111
uart_write_bytes_with_break (C++ function), 1111
UINT16 (C++ type), 448
UINT32 (C++ type), 448
UINT64 (C++ type), 448
UINT8 (C++ type), 448
ULP_FSM_PREPARE_SLEEP_CYCLES (C macro), 2320
ULP_FSM_WAKEUP_SLEEP_CYCLES (C macro), 2320
ulp_insn (C++ union), 2316
ulp_insn::adc (C++ member), 2319
ulp_insn::addr (C++ member), 2318
ulp_insn::alu_imm (C++ member), 2318
ulp_insn::alu_reg (C++ member), 2318
ulp_insn::alu_reg_s (C++ member), 2318
ulp_insn::b (C++ member), 2318
ulp_insn::bs (C++ member), 2318
ulp_insn::bx (C++ member), 2318
ulp_insn::cmp (C++ member), 2318
ulp_insn::cycle_sel (C++ member), 2320
ulp_insn::cycles (C++ member), 2316
ulp_insn::data (C++ member), 2319
ulp_insn::delay (C++ member), 2316
ulp_insn::dreg (C++ member), 2317
ulp_insn::end (C++ member), 2320
ulp_insn::halt (C++ member), 2317
ulp_insn::high (C++ member), 2319
ulp_insn::high_bits (C++ member), 2319
ulp_insn::i2c (C++ member), 2320
ulp_insn::i2c_addr (C++ member), 2319
ulp_insn::i2c_sel (C++ member), 2319
ulp_insn::imm (C++ member), 2318
ulp_insn::instruction (C++ member), 2320
ulp_insn::label (C++ member), 2320
ulp_insn::ld (C++ member), 2317
ulp_insn::low (C++ member), 2319
ulp_insn::low_bits (C++ member), 2319

ulp_insn::macro (C++ member), 2320
ulp_insn::mux (C++ member), 2319
ulp_insn::offset (C++ member), 2317
ulp_insn::opcode (C++ member), 2316
ulp_insn::periph_sel (C++ member), 2319
ulp_insn::rd_reg (C++ member), 2319
ulp_insn::reg (C++ member), 2318
ulp_insn::reserved (C++ member), 2319
ulp_insn::rw (C++ member), 2320
ulp_insn::sar_sel (C++ member), 2319
ulp_insn::sel (C++ member), 2318
ulp_insn::sign (C++ member), 2318
ulp_insn::sleep (C++ member), 2320
ulp_insn::sreg (C++ member), 2317
ulp_insn::st (C++ member), 2317
ulp_insn::sub_opcode (C++ member), 2317
ulp_insn::treg (C++ member), 2318
ulp_insn::tsens (C++ member), 2319
ulp_insn::type (C++ member), 2318
ulp_insn::unused (C++ member), 2316
ulp_insn::unused1 (C++ member), 2317
ulp_insn::unused2 (C++ member), 2317
ulp_insn::wait_delay (C++ member), 2319
ulp_insn::wakeup (C++ member), 2320
ulp_insn::wr_reg (C++ member), 2319
ulp_insn_t (C++ type), 2333
ulp_load_binary (C++ function), 2331, 2336
ulp_process_macros_and_load (C++ function), 2331
ulp_run (C++ function), 2332, 2336
ulp_set_wakeup_period (C++ function), 2332, 2337
ulp_timer_resume (C++ function), 2332
ulp_timer_stop (C++ function), 2332
ulTaskGenericNotifyTake (C++ function), 1534
ulTaskGenericNotifyValueClear (C++ function), 1535
ulTaskGetIdleRunTimeCounter (C++ function), 1529
ulTaskNotifyTake (C macro), 1540
ulTaskNotifyTakeIndexed (C macro), 1540
ulTaskNotifyValueClear (C macro), 1540
ulTaskNotifyValueClearIndexed (C macro), 1540
uxQueueMessagesWaiting (C++ function), 1545
uxQueueMessagesWaitingFromISR (C++ function), 1548
uxQueueSpacesAvailable (C++ function), 1545
uxSemaphoreGetCount (C macro), 1574
uxTaskGetNumberOfTasks (C++ function), 1523
uxTaskGetStackHighWaterMark (C++ function), 1524
uxTaskGetStackHighWaterMark2 (C++ function), 1524
uxTaskGetSystemState (C++ function), 1526
uxTaskPriorityGet (C++ function), 1517
uxTaskPriorityGetFromISR (C++ function), 1518
uxTimerGetReloadMode (C++ function), 1581

V

vApplicationGetIdleTaskMemory (C++ function), 1526
vApplicationGetTimerTaskMemory (C++ function), 1582
vendor_ie_data_t (C++ struct), 692
vendor_ie_data_t::element_id (C++ member), 693
vendor_ie_data_t::length (C++ member), 693
vendor_ie_data_t::payload (C++ member), 693
vendor_ie_data_t::vendor_oui (C++ member), 693
vendor_ie_data_t::vendor_oui_type (C++ member), 693
vEventGroupDelete (C++ function), 1598
vMessageBufferDelete (C macro), 1615
vprintf_like_t (C++ type), 1688
vQueueAddToRegistry (C++ function), 1548
vQueueDelete (C++ function), 1545
vQueueUnregisterQueue (C++ function), 1548
vRingbufferDelete (C++ function), 1633
vRingbufferGetInfo (C++ function), 1634
vRingbufferReturnItem (C++ function), 1632
vRingbufferReturnItemFromISR (C++ function), 1632
vSemaphoreCreateBinary (C macro), 1561
vSemaphoreDelete (C macro), 1573
vStreamBufferDelete (C++ function), 1605
vTaskAllocateMPURegions (C++ function), 1514
vTaskDelay (C++ function), 1515
vTaskDelayUntil (C macro), 1538
vTaskDelete (C++ function), 1515
vTaskEndScheduler (C++ function), 1521
vTaskGenericNotifyGiveFromISR (C++ function), 1533
vTaskGetInfo (C++ function), 1518
vTaskGetRunTimeStats (C++ function), 1528
vTaskList (C++ function), 1528
vTaskNotifyGiveFromISR (C macro), 1540
vTaskNotifyGiveIndexedFromISR (C macro), 1540
vTaskPrioritySet (C++ function), 1519
vTaskResume (C++ function), 1520
vTaskSetApplicationTaskTag (C++ function), 1524
vTaskSetThreadLocalStoragePointer (C++ function), 1525
vTaskSetThreadLocalStoragePointerAndDelCallback (C++ function), 1525
vTaskSetTimeOutState (C++ function), 1536
vTaskStartScheduler (C++ function), 1521

vTaskSuspend (C++ function), 1519
vTaskSuspendAll (C++ function), 1522
vTimerSetReloadMode (C++ function), 1581
vTimerSetTimerID (C++ function), 1578

W

wifi_action_rx_cb_t (C++ type), 705
wifi_action_tx_req_t (C++ struct), 697
wifi_action_tx_req_t::data (C++ member), 698
wifi_action_tx_req_t::data_len (C++ member), 697
wifi_action_tx_req_t::dest_mac (C++ member), 697
wifi_action_tx_req_t::ifx (C++ member), 697
wifi_action_tx_req_t::no_ack (C++ member), 697
wifi_action_tx_req_t::rx_cb (C++ member), 697
wifi_active_scan_time_t (C++ struct), 687
wifi_active_scan_time_t::max (C++ member), 687
wifi_active_scan_time_t::min (C++ member), 687
WIFI_AMPDU_RX_ENABLED (C macro), 685
WIFI_AMPDU_TX_ENABLED (C macro), 685
WIFI_AMSDU_TX_ENABLED (C macro), 685
wifi_ant_config_t (C++ struct), 697
wifi_ant_config_t::enabled_ant0 (C++ member), 697
wifi_ant_config_t::enabled_ant1 (C++ member), 697
wifi_ant_config_t::rx_ant_default (C++ member), 697
wifi_ant_config_t::rx_ant_mode (C++ member), 697
wifi_ant_config_t::tx_ant_mode (C++ member), 697
wifi_ant_gpio_config_t (C++ struct), 696
wifi_ant_gpio_config_t::gpio_cfg (C++ member), 697
wifi_ant_gpio_t (C++ struct), 696
wifi_ant_gpio_t::gpio_num (C++ member), 696
wifi_ant_gpio_t::gpio_select (C++ member), 696
wifi_ant_mode_t (C++ enum), 711
wifi_ant_mode_t::WIFI_ANT_MODE_ANT0 (C++ enumerator), 712
wifi_ant_mode_t::WIFI_ANT_MODE_ANT1 (C++ enumerator), 712
wifi_ant_mode_t::WIFI_ANT_MODE_AUTO (C++ enumerator), 712
wifi_ant_mode_t::WIFI_ANT_MODE_MAX (C++ enumerator), 712
wifi_ant_t (C++ enum), 709
wifi_ant_t::WIFI_ANT_ANT0 (C++ enumerator), 709
wifi_ant_t::WIFI_ANT_ANT1 (C++ enumerator), 709
wifi_ant_t::WIFI_ANT_MAX (C++ enumerator), 709
wifi_ap_config_t (C++ struct), 690
wifi_ap_config_t::authmode (C++ member), 690
wifi_ap_config_t::beacon_interval (C++ member), 690
wifi_ap_config_t::channel (C++ member), 690
wifi_ap_config_t::ftm_responder (C++ member), 690
wifi_ap_config_t::max_connection (C++ member), 690
wifi_ap_config_t::pairwise_cipher (C++ member), 690
wifi_ap_config_t::password (C++ member), 690
wifi_ap_config_t::ssid (C++ member), 690
wifi_ap_config_t::ssid_hidden (C++ member), 690
wifi_ap_config_t::ssid_len (C++ member), 690
wifi_ap_record_t (C++ struct), 688
wifi_ap_record_t::ant (C++ member), 688
wifi_ap_record_t::authmode (C++ member), 688
wifi_ap_record_t::bssid (C++ member), 688
wifi_ap_record_t::country (C++ member), 689
wifi_ap_record_t::ftm_initiator (C++ member), 689
wifi_ap_record_t::ftm_responder (C++ member), 689
wifi_ap_record_t::group_cipher (C++ member), 688
wifi_ap_record_t::pairwise_cipher (C++ member), 688
wifi_ap_record_t::phy_11b (C++ member), 689
wifi_ap_record_t::phy_11g (C++ member), 689
wifi_ap_record_t::phy_11n (C++ member), 689
wifi_ap_record_t::phy_lr (C++ member), 689
wifi_ap_record_t::primary (C++ member), 688
wifi_ap_record_t::reserved (C++ member), 689
wifi_ap_record_t::rssi (C++ member), 688
wifi_ap_record_t::second (C++ member), 688
wifi_ap_record_t::ssid (C++ member), 688
wifi_ap_record_t::wps (C++ member), 689

wifi_auth_mode_t (*C++ enum*), 706
wifi_auth_mode_t::WIFI_AUTH_MAX (*C++ enumerator*), 706
wifi_auth_mode_t::WIFI_AUTH_OPEN (*C++ enumerator*), 706
wifi_auth_mode_t::WIFI_AUTH_WAPI_PSK (*C++ enumerator*), 706
wifi_auth_mode_t::WIFI_AUTH_WEP (*C++ enumerator*), 706
wifi_auth_mode_t::WIFI_AUTH_WPA2_ENTERPRISE (*C++ enumerator*), 706
wifi_auth_mode_t::WIFI_AUTH_WPA2_PSK (*C++ enumerator*), 706
wifi_auth_mode_t::WIFI_AUTH_WPA2_WPA3_PSK (*C++ enumerator*), 706
wifi_auth_mode_t::WIFI_AUTH_WPA3_PSK (*C++ enumerator*), 706
wifi_auth_mode_t::WIFI_AUTH_WPA_PSK (*C++ enumerator*), 706
wifi_auth_mode_t::WIFI_AUTH_WPA_WPA2_PSK (*C++ enumerator*), 706
wifi_bandwidth_t (*C++ enum*), 710
wifi_bandwidth_t::WIFI_BW_HT20 (*C++ enumerator*), 710
wifi_bandwidth_t::WIFI_BW_HT40 (*C++ enumerator*), 710
WIFI_CACHE_TX_BUFFER_NUM (*C macro*), 685
wifi_cipher_type_t (*C++ enum*), 708
wifi_cipher_type_t::WIFI_CIPHER_TYPE_AES_CMAC128 (*C++ enumerator*), 709
wifi_cipher_type_t::WIFI_CIPHER_TYPE_AES_GMAC128 (*C++ enumerator*), 709
wifi_cipher_type_t::WIFI_CIPHER_TYPE_AES_GMAC256 (*C++ enumerator*), 709
wifi_cipher_type_t::WIFI_CIPHER_TYPE_CCMP (*C++ enumerator*), 709
wifi_cipher_type_t::WIFI_CIPHER_TYPE_GCMP (*C++ enumerator*), 709
wifi_cipher_type_t::WIFI_CIPHER_TYPE_GCMP256 (*C++ enumerator*), 709
wifi_cipher_type_t::WIFI_CIPHER_TYPE_NONE (*C++ enumerator*), 708
wifi_cipher_type_t::WIFI_CIPHER_TYPE_SMS4 (*C++ enumerator*), 709
wifi_cipher_type_t::WIFI_CIPHER_TYPE_TKIP (*C++ enumerator*), 708
wifi_cipher_type_t::WIFI_CIPHER_TYPE_TKIP_CCMP (*C++ enumerator*), 709
wifi_cipher_type_t::WIFI_CIPHER_TYPE_UNKNOWN (*C++ enumerator*), 709
wifi_cipher_type_t::WIFI_CIPHER_TYPE_WEP104 (*C++ enumerator*), 708
wifi_cipher_type_t::WIFI_CIPHER_TYPE_WEP40 (*C++ enumerator*), 708
wifi_config_t (*C++ union*), 686
wifi_config_t::ap (*C++ member*), 686
wifi_config_t::sta (*C++ member*), 686
wifi_country_policy_t (*C++ enum*), 705
wifi_country_policy_t::WIFI_COUNTRY_POLICY_AUTO (*C++ enumerator*), 706
wifi_country_policy_t::WIFI_COUNTRY_POLICY_MANUAL (*C++ enumerator*), 706
wifi_country_t (*C++ struct*), 686
wifi_country_t::cc (*C++ member*), 687
wifi_country_t::max_tx_power (*C++ member*), 687
wifi_country_t::nchan (*C++ member*), 687
wifi_country_t::policy (*C++ member*), 687
wifi_country_t::schan (*C++ member*), 687
wifi_csi_cb_t (*C++ type*), 686
wifi_csi_config_t (*C++ struct*), 695
wifi_csi_config_t::channel_filter_en (*C++ member*), 696
wifi_csi_config_t::htltf_en (*C++ member*), 695
wifi_csi_config_t::lltf_en (*C++ member*), 695
wifi_csi_config_t::ltf_merge_en (*C++ member*), 696
wifi_csi_config_t::manu_scale (*C++ member*), 696
wifi_csi_config_t::shift (*C++ member*), 696
wifi_csi_config_t::stbc_htltf2_en (*C++ member*), 695
WIFI_CSI_ENABLED (*C macro*), 685
wifi_csi_info_t (*C++ struct*), 696
wifi_csi_info_t::buf (*C++ member*), 696
wifi_csi_info_t::first_word_invalid (*C++ member*), 696
wifi_csi_info_t::len (*C++ member*), 696
wifi_csi_info_t::mac (*C++ member*), 696
wifi_csi_info_t::rx_ctrl (*C++ member*), 696
WIFI_DEFAULT_RX_BA_WIN (*C macro*), 685
WIFI_DYNAMIC_TX_BUFFER_NUM (*C macro*), 685
wifi_err_reason_t (*C++ enum*), 706
wifi_err_reason_t::WIFI_REASON_4WAY_HANDSHAKE_TIM (*C++ enumerator*), 707
wifi_err_reason_t::WIFI_REASON_802_1X_AUTH_FAILED (*C++ enumerator*), 707
wifi_err_reason_t::WIFI_REASON_AKMP_INVALID (*C++ enumerator*), 707
wifi_err_reason_t::WIFI_REASON_AP_TSF_RESET (*C++ enumerator*), 708
wifi_err_reason_t::WIFI_REASON_ASSOC_EXPIRE (*C++ enumerator*), 707
wifi_err_reason_t::WIFI_REASON_ASSOC_FAIL (*C++ enumerator*), 708
wifi_err_reason_t::WIFI_REASON_ASSOC_LEAVE (*C++ enumerator*), 707
wifi_err_reason_t::WIFI_REASON_ASSOC_NOT_AUTHED (*C++ enumerator*), 707
wifi_err_reason_t::WIFI_REASON_ASSOC_TOOMANY (*C++ enumerator*), 707
wifi_err_reason_t::WIFI_REASON_AUTH_EXPIRE

(C++ *enumerator*), 706
wifi_err_reason_t::WIFI_REASON_AUTH_FAIL (C++ *enumerator*), 708
wifi_err_reason_t::WIFI_REASON_AUTH_LEAVE (C++ *enumerator*), 706
wifi_err_reason_t::WIFI_REASON_BEACON_TIMEOUT (C++ *enumerator*), 707
wifi_err_reason_t::WIFI_REASON_BSS_TRANSITION_DISASSOC (C++ *enumerator*), 707
wifi_err_reason_t::WIFI_REASON_CIPHER_SUITE_REJECTED (C++ *enumerator*), 707
wifi_err_reason_t::WIFI_REASON_CONNECTION_FAIL (C++ *enumerator*), 708
wifi_err_reason_t::WIFI_REASON_DISASSOC_PWRCAP_BAD (C++ *enumerator*), 707
wifi_err_reason_t::WIFI_REASON_DISASSOC_STA_HAS_LEFT (C++ *enumerator*), 707
wifi_err_reason_t::WIFI_REASON_GROUP_CIPHER_INVALID (C++ *enumerator*), 707
wifi_err_reason_t::WIFI_REASON_GROUP_KEY_UPDATE_TIMEOUT (C++ *enumerator*), 707
wifi_err_reason_t::WIFI_REASON_HANDSHAKE_TIMEOUT (C++ *enumerator*), 708
wifi_err_reason_t::WIFI_REASON_IE_IN_4WAY_DIFFERS (C++ *enumerator*), 707
wifi_err_reason_t::WIFI_REASON_IE_INVALID (C++ *enumerator*), 707
wifi_err_reason_t::WIFI_REASON_INVALID_PMKID (C++ *enumerator*), 707
wifi_err_reason_t::WIFI_REASON_INVALID_RSN_IE_CAP (C++ *enumerator*), 707
wifi_err_reason_t::WIFI_REASON_MIC_FAILURE (C++ *enumerator*), 707
wifi_err_reason_t::WIFI_REASON_NO_AP_FOUND (C++ *enumerator*), 708
wifi_err_reason_t::WIFI_REASON_NOT_ASSOCED (C++ *enumerator*), 707
wifi_err_reason_t::WIFI_REASON_NOT_AUTHED (C++ *enumerator*), 707
wifi_err_reason_t::WIFI_REASON_PAIRWISE_CIPHER_INVALID (C++ *enumerator*), 707
wifi_err_reason_t::WIFI_REASON_ROAMING (C++ *enumerator*), 708
wifi_err_reason_t::WIFI_REASON_UNSPECIFIED (C++ *enumerator*), 706
wifi_err_reason_t::WIFI_REASON_UNSUPP_RSN_IE_VERSION (C++ *enumerator*), 707
wifi_event_action_tx_status_t (C++ *struct*), 702
wifi_event_action_tx_status_t::context (C++ *member*), 702
wifi_event_action_tx_status_t::da (C++ *member*), 702
wifi_event_action_tx_status_t::ifx (C++ *member*), 702
wifi_event_action_tx_status_t::status (C++ *member*), 702
wifi_event_ap_probe_req_rx_t (C++ *struct*), 701
wifi_event_ap_probe_req_rx_t::mac (C++ *member*), 701
wifi_event_ap_probe_req_rx_t::rssi (C++ *member*), 701
wifi_event_ap_staconnected_t (C++ *struct*), 700
wifi_event_ap_staconnected_t::aid (C++ *member*), 700
wifi_event_ap_staconnected_t::is_mesh_child (C++ *member*), 700
wifi_event_ap_staconnected_t::mac (C++ *member*), 700
wifi_event_ap_stadisconnected_t (C++ *struct*), 700
wifi_event_ap_stadisconnected_t::aid (C++ *member*), 700
wifi_event_ap_stadisconnected_t::is_mesh_child (C++ *member*), 700
wifi_event_ap_stadisconnected_t::mac (C++ *member*), 700
wifi_event_bss_rssi_low_t (C++ *struct*), 701
wifi_event_bss_rssi_low_t::rssi (C++ *member*), 701
wifi_event_ftm_report_t (C++ *struct*), 702
wifi_event_ftm_report_t::dist_est (C++ *member*), 702
wifi_event_ftm_report_t::ftm_report_data (C++ *member*), 702
wifi_event_ftm_report_t::ftm_report_num_entries (C++ *member*), 702
wifi_event_ftm_report_t::peer_mac (C++ *member*), 702
wifi_event_ftm_report_t::rtt_est (C++ *member*), 702
wifi_event_ftm_report_t::rtt_raw (C++ *member*), 702
wifi_event_ftm_report_t::status (C++ *member*), 702
WIFI_EVENT_MASK_ALL (C *macro*), 704
WIFI_EVENT_MASK_AP_PROBEREQRECVED (C *macro*), 704
WIFI_EVENT_MASK_NONE (C *macro*), 704
wifi_event_roc_done_t (C++ *struct*), 702
wifi_event_roc_done_t::context (C++ *member*), 703
wifi_event_sta_authmode_change_t (C++ *struct*), 699
wifi_event_sta_authmode_change_t::new_mode (C++ *member*), 699
wifi_event_sta_authmode_change_t::old_mode (C++ *member*), 699
wifi_event_sta_connected_t (C++ *struct*), 698
wifi_event_sta_connected_t::authmode (C++ *member*), 699
wifi_event_sta_connected_t::bssid (C++ *member*), 699

wifi_event_sta_connected_t::channel (C++ member), 699
wifi_event_sta_connected_t::ssid (C++ member), 698
wifi_event_sta_connected_t::ssid_len (C++ member), 698
wifi_event_sta_disconnected_t (C++ struct), 699
wifi_event_sta_disconnected_t::bssid (C++ member), 699
wifi_event_sta_disconnected_t::reason (C++ member), 699
wifi_event_sta_disconnected_t::ssid (C++ member), 699
wifi_event_sta_disconnected_t::ssid_len (C++ member), 699
wifi_event_sta_scan_done_t (C++ struct), 698
wifi_event_sta_scan_done_t::number (C++ member), 698
wifi_event_sta_scan_done_t::scan_id (C++ member), 698
wifi_event_sta_scan_done_t::status (C++ member), 698
wifi_event_sta_wps_er_pin_t (C++ struct), 699
wifi_event_sta_wps_er_pin_t::pin_code (C++ member), 699
wifi_event_sta_wps_er_success_t (C++ struct), 700
wifi_event_sta_wps_er_success_t::ap_cred (C++ member), 700
wifi_event_sta_wps_er_success_t::ap_cred_cnt (C++ member), 700
wifi_event_sta_wps_er_success_t::passphrase (C++ member), 700
wifi_event_sta_wps_er_success_t::ssid (C++ member), 700
wifi_event_sta_wps_fail_reason_t (C++ enum), 716
wifi_event_sta_wps_fail_reason_t::WPS_FAIL_REASON_MAX (C++ enumerator), 716
wifi_event_sta_wps_fail_reason_t::WPS_FAIL_REASON_NORMAL (C++ enumerator), 716
wifi_event_sta_wps_fail_reason_t::WPS_FAIL_REASON_RECV_M2D (C++ enumerator), 716
wifi_event_t (C++ enum), 714
wifi_event_t::WIFI_EVENT_ACTION_TX_STATUS (C++ enumerator), 715
wifi_event_t::WIFI_EVENT_AP_PROBEREQRECVED (C++ enumerator), 715
wifi_event_t::WIFI_EVENT_AP_STACONNECTED (C++ enumerator), 715
wifi_event_t::WIFI_EVENT_AP_STADISCONNECTED (C++ enumerator), 715
wifi_event_t::WIFI_EVENT_AP_START (C++ enumerator), 715
wifi_event_t::WIFI_EVENT_AP_STOP (C++ enumerator), 715
wifi_event_t::WIFI_EVENT_FTM_REPORT (C++ enumerator), 715
wifi_event_t::WIFI_EVENT_MAX (C++ enumerator), 715
wifi_event_t::WIFI_EVENT_ROC_DONE (C++ enumerator), 715
wifi_event_t::WIFI_EVENT_SCAN_DONE (C++ enumerator), 714
wifi_event_t::WIFI_EVENT_STA_AUTHMODE_CHANGE (C++ enumerator), 714
wifi_event_t::WIFI_EVENT_STA_BEACON_TIMEOUT (C++ enumerator), 715
wifi_event_t::WIFI_EVENT_STA_BSS_RSSI_LOW (C++ enumerator), 715
wifi_event_t::WIFI_EVENT_STA_CONNECTED (C++ enumerator), 714
wifi_event_t::WIFI_EVENT_STA_DISCONNECTED (C++ enumerator), 714
wifi_event_t::WIFI_EVENT_STA_START (C++ enumerator), 714
wifi_event_t::WIFI_EVENT_STA_STOP (C++ enumerator), 714
wifi_event_t::WIFI_EVENT_STA_WPS_ER_FAILED (C++ enumerator), 715
wifi_event_t::WIFI_EVENT_STA_WPS_ER_PBC_OVERLAP (C++ enumerator), 715
wifi_event_t::WIFI_EVENT_STA_WPS_ER_PIN (C++ enumerator), 715
wifi_event_t::WIFI_EVENT_STA_WPS_ER_SUCCESS (C++ enumerator), 715
wifi_event_t::WIFI_EVENT_STA_WPS_ER_TIMEOUT (C++ enumerator), 715
wifi_event_t::WIFI_EVENT_WIFI_READY (C++ enumerator), 714
wifi_ftm_initiator_cfg_t (C++ struct), 698
wifi_ftm_initiator_cfg_t::burst_period (C++ member), 698
wifi_ftm_initiator_cfg_t::channel (C++ member), 698
wifi_ftm_initiator_cfg_t::frm_count (C++ member), 698
wifi_ftm_initiator_cfg_t::resp_mac (C++ member), 698
wifi_ftm_report_entry_t (C++ struct), 701
wifi_ftm_report_entry_t::dlog_token (C++ member), 701
wifi_ftm_report_entry_t::rssi (C++ member), 701
wifi_ftm_report_entry_t::rtt (C++ member), 701
wifi_ftm_report_entry_t::t1 (C++ member), 701
wifi_ftm_report_entry_t::t2 (C++ member), 701
wifi_ftm_report_entry_t::t3 (C++ member), 701
wifi_ftm_report_entry_t::t4 (C++ mem-

ber), 701
wifi_ftm_status_t (*C++ enum*), 716
wifi_ftm_status_t::FTM_STATUS_CONF_REJECTED (*C++ enumerator*), 716
wifi_ftm_status_t::FTM_STATUS_FAIL (*C++ enumerator*), 716
wifi_ftm_status_t::FTM_STATUS_NO_RESPONSE (*C++ enumerator*), 716
wifi_ftm_status_t::FTM_STATUS_SUCCESS (*C++ enumerator*), 716
wifi_ftm_status_t::FTM_STATUS_UNSUPPORTED (*C++ enumerator*), 716
WIFI_INIT_CONFIG_DEFAULT (*C macro*), 685
WIFI_INIT_CONFIG_MAGIC (*C macro*), 685
wifi_init_config_t (*C++ struct*), 682
wifi_init_config_t::ampdu_rx_enable (*C++ member*), 683
wifi_init_config_t::ampdu_tx_enable (*C++ member*), 683
wifi_init_config_t::amsdu_tx_enable (*C++ member*), 683
wifi_init_config_t::beacon_max_len (*C++ member*), 683
wifi_init_config_t::cache_tx_buf_num (*C++ member*), 682
wifi_init_config_t::csi_enable (*C++ member*), 682
wifi_init_config_t::dynamic_rx_buf_num (*C++ member*), 682
wifi_init_config_t::dynamic_tx_buf_num (*C++ member*), 682
wifi_init_config_t::event_handler (*C++ member*), 682
wifi_init_config_t::feature_caps (*C++ member*), 683
wifi_init_config_t::magic (*C++ member*), 683
wifi_init_config_t::mgmt_sbuf_num (*C++ member*), 683
wifi_init_config_t::nano_enable (*C++ member*), 683
wifi_init_config_t::nvs_enable (*C++ member*), 683
wifi_init_config_t::osi_funcs (*C++ member*), 682
wifi_init_config_t::rx_ba_win (*C++ member*), 683
wifi_init_config_t::sta_disconnected_pm (*C++ member*), 683
wifi_init_config_t::static_rx_buf_num (*C++ member*), 682
wifi_init_config_t::static_tx_buf_num (*C++ member*), 682
wifi_init_config_t::tx_buf_type (*C++ member*), 682
wifi_init_config_t::wifi_task_core_id (*C++ member*), 683
wifi_init_config_t::wpa_crypto_funcs (*C++ member*), 682
wifi_interface_t (*C++ enum*), 705
wifi_interface_t::WIFI_IF_AP (*C++ enumerator*), 705
wifi_interface_t::WIFI_IF_STA (*C++ enumerator*), 705
WIFI_MGMT_SBUF_NUM (*C macro*), 685
wifi_mode_t (*C++ enum*), 705
wifi_mode_t::WIFI_MODE_AP (*C++ enumerator*), 705
wifi_mode_t::WIFI_MODE_APSTA (*C++ enumerator*), 705
wifi_mode_t::WIFI_MODE_MAX (*C++ enumerator*), 705
wifi_mode_t::WIFI_MODE_NULL (*C++ enumerator*), 705
wifi_mode_t::WIFI_MODE_STA (*C++ enumerator*), 705
WIFI_NANO_FORMAT_ENABLED (*C macro*), 685
WIFI_NVS_ENABLED (*C macro*), 685
WIFI_OFFCHAN_TX_CANCEL (*C macro*), 703
WIFI_OFFCHAN_TX_REQ (*C macro*), 703
wifi_phy_rate_t (*C++ enum*), 712
wifi_phy_rate_t::WIFI_PHY_RATE_11M_L (*C++ enumerator*), 712
wifi_phy_rate_t::WIFI_PHY_RATE_11M_S (*C++ enumerator*), 712
wifi_phy_rate_t::WIFI_PHY_RATE_12M (*C++ enumerator*), 712
wifi_phy_rate_t::WIFI_PHY_RATE_18M (*C++ enumerator*), 713
wifi_phy_rate_t::WIFI_PHY_RATE_1M_L (*C++ enumerator*), 712
wifi_phy_rate_t::WIFI_PHY_RATE_24M (*C++ enumerator*), 712
wifi_phy_rate_t::WIFI_PHY_RATE_2M_L (*C++ enumerator*), 712
wifi_phy_rate_t::WIFI_PHY_RATE_2M_S (*C++ enumerator*), 712
wifi_phy_rate_t::WIFI_PHY_RATE_36M (*C++ enumerator*), 713
wifi_phy_rate_t::WIFI_PHY_RATE_48M (*C++ enumerator*), 712
wifi_phy_rate_t::WIFI_PHY_RATE_54M (*C++ enumerator*), 713
wifi_phy_rate_t::WIFI_PHY_RATE_5M_L (*C++ enumerator*), 712
wifi_phy_rate_t::WIFI_PHY_RATE_5M_S (*C++ enumerator*), 712
wifi_phy_rate_t::WIFI_PHY_RATE_6M (*C++ enumerator*), 713
wifi_phy_rate_t::WIFI_PHY_RATE_9M (*C++ enumerator*), 713
wifi_phy_rate_t::WIFI_PHY_RATE_LORA_250K (*C++ enumerator*), 714
wifi_phy_rate_t::WIFI_PHY_RATE_LORA_500K (*C++ enumerator*), 714
wifi_phy_rate_t::WIFI_PHY_RATE_MAX

(C++ *enumerator*), 714
wifi_phy_rate_t::WIFI_PHY_RATE_MCS0_LGI (C++ *enumerator*), 713
wifi_phy_rate_t::WIFI_PHY_RATE_MCS0_SGI (C++ *enumerator*), 713
wifi_phy_rate_t::WIFI_PHY_RATE_MCS1_LGI (C++ *enumerator*), 713
wifi_phy_rate_t::WIFI_PHY_RATE_MCS1_SGI (C++ *enumerator*), 713
wifi_phy_rate_t::WIFI_PHY_RATE_MCS2_LGI (C++ *enumerator*), 713
wifi_phy_rate_t::WIFI_PHY_RATE_MCS2_SGI (C++ *enumerator*), 713
wifi_phy_rate_t::WIFI_PHY_RATE_MCS3_LGI (C++ *enumerator*), 713
wifi_phy_rate_t::WIFI_PHY_RATE_MCS3_SGI (C++ *enumerator*), 714
wifi_phy_rate_t::WIFI_PHY_RATE_MCS4_LGI (C++ *enumerator*), 713
wifi_phy_rate_t::WIFI_PHY_RATE_MCS4_SGI (C++ *enumerator*), 714
wifi_phy_rate_t::WIFI_PHY_RATE_MCS5_LGI (C++ *enumerator*), 713
wifi_phy_rate_t::WIFI_PHY_RATE_MCS5_SGI (C++ *enumerator*), 714
wifi_phy_rate_t::WIFI_PHY_RATE_MCS6_LGI (C++ *enumerator*), 713
wifi_phy_rate_t::WIFI_PHY_RATE_MCS6_SGI (C++ *enumerator*), 714
wifi_phy_rate_t::WIFI_PHY_RATE_MCS7_LGI (C++ *enumerator*), 713
wifi_phy_rate_t::WIFI_PHY_RATE_MCS7_SGI (C++ *enumerator*), 714
wifi_pkt_rx_ctrl_t (C++ *struct*), 693
wifi_pkt_rx_ctrl_t::__pad0__ (C++ *member*), 693
wifi_pkt_rx_ctrl_t::__pad1__ (C++ *member*), 693
wifi_pkt_rx_ctrl_t::__pad2__ (C++ *member*), 694
wifi_pkt_rx_ctrl_t::__pad3__ (C++ *member*), 694
wifi_pkt_rx_ctrl_t::__pad4__ (C++ *member*), 694
wifi_pkt_rx_ctrl_t::__pad5__ (C++ *member*), 694
wifi_pkt_rx_ctrl_t::__pad6__ (C++ *member*), 694
wifi_pkt_rx_ctrl_t::__pad7__ (C++ *member*), 695
wifi_pkt_rx_ctrl_t::aggregation (C++ *member*), 694
wifi_pkt_rx_ctrl_t::ampdu_cnt (C++ *member*), 694
wifi_pkt_rx_ctrl_t::ant (C++ *member*), 695
wifi_pkt_rx_ctrl_t::channel (C++ *member*), 694
wifi_pkt_rx_ctrl_t::cwb (C++ *member*), 693
wifi_pkt_rx_ctrl_t::fec_coding (C++ *member*), 694
wifi_pkt_rx_ctrl_t::mcs (C++ *member*), 693
wifi_pkt_rx_ctrl_t::noise_floor (C++ *member*), 694
wifi_pkt_rx_ctrl_t::not_sounding (C++ *member*), 694
wifi_pkt_rx_ctrl_t::rate (C++ *member*), 693
wifi_pkt_rx_ctrl_t::rssi (C++ *member*), 693
wifi_pkt_rx_ctrl_t::rx_state (C++ *member*), 695
wifi_pkt_rx_ctrl_t::secondary_channel (C++ *member*), 694
wifi_pkt_rx_ctrl_t::sgi (C++ *member*), 694
wifi_pkt_rx_ctrl_t::sig_len (C++ *member*), 695
wifi_pkt_rx_ctrl_t::sig_mode (C++ *member*), 693
wifi_pkt_rx_ctrl_t::smoothing (C++ *member*), 694
wifi_pkt_rx_ctrl_t::stbc (C++ *member*), 694
wifi_pkt_rx_ctrl_t::timestamp (C++ *member*), 694
wifi_pmf_config_t (C++ *struct*), 689
wifi_pmf_config_t::capable (C++ *member*), 689
wifi_pmf_config_t::required (C++ *member*), 690
WIFI_PROMIS_CTRL_FILTER_MASK_ACK (C *macro*), 704
WIFI_PROMIS_CTRL_FILTER_MASK_ALL (C *macro*), 704
WIFI_PROMIS_CTRL_FILTER_MASK_BA (C *macro*), 704
WIFI_PROMIS_CTRL_FILTER_MASK_BAR (C *macro*), 704
WIFI_PROMIS_CTRL_FILTER_MASK_CFEND (C *macro*), 704
WIFI_PROMIS_CTRL_FILTER_MASK_CFENDACK (C *macro*), 704
WIFI_PROMIS_CTRL_FILTER_MASK_CTS (C *macro*), 704
WIFI_PROMIS_CTRL_FILTER_MASK_PSPOLL (C *macro*), 704
WIFI_PROMIS_CTRL_FILTER_MASK_RTS (C *macro*), 704
WIFI_PROMIS_CTRL_FILTER_MASK_WRAPPER (C *macro*), 704
WIFI_PROMIS_FILTER_MASK_ALL (C *macro*), 703
WIFI_PROMIS_FILTER_MASK_CTRL (C *macro*), 703
WIFI_PROMIS_FILTER_MASK_DATA (C *macro*), 703
WIFI_PROMIS_FILTER_MASK_DATA_AMPDU (C

macro), 703
WIFI_PROMIS_FILTER_MASK_DATA_MPDU (*C macro*), 703
WIFI_PROMIS_FILTER_MASK_FCSFAIL (*C macro*), 703
WIFI_PROMIS_FILTER_MASK_MGMT (*C macro*), 703
WIFI_PROMIS_FILTER_MASK_MISC (*C macro*), 703
wifi_promiscuous_cb_t (*C++ type*), 686
wifi_promiscuous_filter_t (*C++ struct*), 695
wifi_promiscuous_filter_t::filter_mask (*C++ member*), 695
wifi_promiscuous_pkt_t (*C++ struct*), 695
wifi_promiscuous_pkt_t::payload (*C++ member*), 695
wifi_promiscuous_pkt_t::rx_ctrl (*C++ member*), 695
wifi_promiscuous_pkt_type_t (*C++ enum*), 711
wifi_promiscuous_pkt_type_t::WIFI_PKT_CTRL (*C++ enumerator*), 711
wifi_promiscuous_pkt_type_t::WIFI_PKT_DATA (*C++ enumerator*), 711
wifi_promiscuous_pkt_type_t::WIFI_PKT_MGMT (*C++ enumerator*), 711
wifi_promiscuous_pkt_type_t::WIFI_PKT_MISC (*C++ enumerator*), 711
WIFI_PROTOCOL_11B (*C macro*), 703
WIFI_PROTOCOL_11G (*C macro*), 703
WIFI_PROTOCOL_11N (*C macro*), 703
WIFI_PROTOCOL_LR (*C macro*), 703
wifi_prov_cb_event_t (*C++ enum*), 1331
wifi_prov_cb_event_t::WIFI_PROV_CRED_FAIL (*C++ enumerator*), 1332
wifi_prov_cb_event_t::WIFI_PROV_CRED_RECV (*C++ enumerator*), 1332
wifi_prov_cb_event_t::WIFI_PROV_CRED_SUCCESS (*C++ enumerator*), 1332
wifi_prov_cb_event_t::WIFI_PROV_DEINIT (*C++ enumerator*), 1332
wifi_prov_cb_event_t::WIFI_PROV_END (*C++ enumerator*), 1332
wifi_prov_cb_event_t::WIFI_PROV_INIT (*C++ enumerator*), 1332
wifi_prov_cb_event_t::WIFI_PROV_START (*C++ enumerator*), 1332
wifi_prov_cb_func_t (*C++ type*), 1331
wifi_prov_config_data_handler (*C++ function*), 1334
wifi_prov_config_get_data_t (*C++ struct*), 1334
wifi_prov_config_get_data_t::conn_info (*C++ member*), 1335
wifi_prov_config_get_data_t::fail_reason (*C++ member*), 1335
wifi_prov_config_get_data_t::wifi_state (*C++ member*), 1335
wifi_prov_config_handlers (*C++ struct*), 1335
wifi_prov_config_handlers::apply_config_handler (*C++ member*), 1335
wifi_prov_config_handlers::ctx (*C++ member*), 1335
wifi_prov_config_handlers::get_status_handler (*C++ member*), 1335
wifi_prov_config_handlers::set_config_handler (*C++ member*), 1335
wifi_prov_config_handlers_t (*C++ type*), 1336
wifi_prov_config_set_data_t (*C++ struct*), 1335
wifi_prov_config_set_data_t::bssid (*C++ member*), 1335
wifi_prov_config_set_data_t::channel (*C++ member*), 1335
wifi_prov_config_set_data_t::password (*C++ member*), 1335
wifi_prov_config_set_data_t::ssid (*C++ member*), 1335
wifi_prov_ctx_t (*C++ type*), 1336
WIFI_PROV_EVENT_HANDLER_NONE (*C macro*), 1331
wifi_prov_event_handler_t (*C++ struct*), 1329
wifi_prov_event_handler_t::event_cb (*C++ member*), 1330
wifi_prov_event_handler_t::user_data (*C++ member*), 1330
wifi_prov_mgr_config_t (*C++ struct*), 1330
wifi_prov_mgr_config_t::app_event_handler (*C++ member*), 1331
wifi_prov_mgr_config_t::scheme (*C++ member*), 1331
wifi_prov_mgr_config_t::scheme_event_handler (*C++ member*), 1331
wifi_prov_mgr_configure_sta (*C++ function*), 1329
wifi_prov_mgr_deinit (*C++ function*), 1325
wifi_prov_mgr_disable_auto_stop (*C++ function*), 1326
wifi_prov_mgr_endpoint_create (*C++ function*), 1327
wifi_prov_mgr_endpoint_register (*C++ function*), 1328
wifi_prov_mgr_endpoint_unregister (*C++ function*), 1328
wifi_prov_mgr_event_handler (*C++ function*), 1328
wifi_prov_mgr_get_wifi_disconnect_reason (*C++ function*), 1329
wifi_prov_mgr_get_wifi_state (*C++ function*), 1329
wifi_prov_mgr_init (*C++ function*), 1325
wifi_prov_mgr_is_provisioned (*C++ function*), 1325

wifi_prov_mgr_reset_provisioning (*C++ function*), 1329
wifi_prov_mgr_reset_sm_state_on_failure (*C++ function*), 1329
wifi_prov_mgr_set_app_info (*C++ function*), 1327
wifi_prov_mgr_start_provisioning (*C++ function*), 1325
wifi_prov_mgr_stop_provisioning (*C++ function*), 1326
wifi_prov_mgr_wait (*C++ function*), 1326
wifi_prov_scheme (*C++ struct*), 1330
wifi_prov_scheme::delete_config (*C++ member*), 1330
wifi_prov_scheme::new_config (*C++ member*), 1330
wifi_prov_scheme::prov_start (*C++ member*), 1330
wifi_prov_scheme::prov_stop (*C++ member*), 1330
wifi_prov_scheme::set_config_endpoint (*C++ member*), 1330
wifi_prov_scheme::set_config_service (*C++ member*), 1330
wifi_prov_scheme::wifi_mode (*C++ member*), 1330
wifi_prov_scheme_ble_event_cb_free_ble (*C++ function*), 1332
wifi_prov_scheme_ble_event_cb_free_bt (*C++ function*), 1332
wifi_prov_scheme_ble_event_cb_free_btdm (*C++ function*), 1332
WIFI_PROV_SCHEME_BLE_EVENT_HANDLER_FREE_BLE (*C macro*), 1333
WIFI_PROV_SCHEME_BLE_EVENT_HANDLER_FREE_BT (*C macro*), 1333
WIFI_PROV_SCHEME_BLE_EVENT_HANDLER_FREE_BTDM (*C macro*), 1333
wifi_prov_scheme_ble_set_mfg_data (*C++ function*), 1333
wifi_prov_scheme_ble_set_service_uuid (*C++ function*), 1333
wifi_prov_scheme_softap_set_httpd_handle (*C++ function*), 1334
wifi_prov_scheme_t (*C++ type*), 1331
wifi_prov_security (*C++ enum*), 1332
wifi_prov_security::WIFI_PROV_SECURITY_0 (*C++ enumerator*), 1332
wifi_prov_security::WIFI_PROV_SECURITY_1 (*C++ enumerator*), 1332
wifi_prov_security_t (*C++ type*), 1331
wifi_prov_sta_conn_info_t (*C++ struct*), 1334
wifi_prov_sta_conn_info_t::auth_mode (*C++ member*), 1334
wifi_prov_sta_conn_info_t::bssid (*C++ member*), 1334
wifi_prov_sta_conn_info_t::channel (*C++ member*), 1334
wifi_prov_sta_conn_info_t::ip_addr (*C++ member*), 1334
wifi_prov_sta_conn_info_t::ssid (*C++ member*), 1334
wifi_prov_sta_fail_reason_t (*C++ enum*), 1336
wifi_prov_sta_fail_reason_t::WIFI_PROV_STA_AP_NOT (*C++ enumerator*), 1336
wifi_prov_sta_fail_reason_t::WIFI_PROV_STA_AUTH_E (*C++ enumerator*), 1336
wifi_prov_sta_state_t (*C++ enum*), 1336
wifi_prov_sta_state_t::WIFI_PROV_STA_CONNECTED (*C++ enumerator*), 1336
wifi_prov_sta_state_t::WIFI_PROV_STA_CONNECTING (*C++ enumerator*), 1336
wifi_prov_sta_state_t::WIFI_PROV_STA_DISCONNECTED (*C++ enumerator*), 1336
wifi_ps_type_t (*C++ enum*), 710
wifi_ps_type_t::WIFI_PS_MAX_MODEM (*C++ enumerator*), 710
wifi_ps_type_t::WIFI_PS_MIN_MODEM (*C++ enumerator*), 710
wifi_ps_type_t::WIFI_PS_NONE (*C++ enumerator*), 710
WIFI_ROC_CANCEL (*C macro*), 703
WIFI_ROC_REQ (*C macro*), 703
wifi_sae_pwe_method_t (*C++ enum*), 710
wifi_sae_pwe_method_t::WPA3_SAE_PWE_BOTH (*C++ enumerator*), 710
wifi_sae_pwe_method_t::WPA3_SAE_PWE_HASH_TO_ELEME (*C++ enumerator*), 710
wifi_sae_pwe_method_t::WPA3_SAE_PWE_HUNT_AND_PECK (*C++ enumerator*), 710
wifi_sae_pwe_method_t::WPA3_SAE_PWE_UNSPECIFIED (*C++ enumerator*), 710
wifi_scan_config_t (*C++ struct*), 687
wifi_scan_config_t::bssid (*C++ member*), 688
wifi_scan_config_t::channel (*C++ member*), 688
wifi_scan_config_t::scan_time (*C++ member*), 688
wifi_scan_config_t::scan_type (*C++ member*), 688
wifi_scan_config_t::show_hidden (*C++ member*), 688
wifi_scan_config_t::ssid (*C++ member*), 687
wifi_scan_method_t (*C++ enum*), 709
wifi_scan_method_t::WIFI_ALL_CHANNEL_SCAN (*C++ enumerator*), 709
wifi_scan_method_t::WIFI_FAST_SCAN (*C++ enumerator*), 709
wifi_scan_threshold_t (*C++ struct*), 689
wifi_scan_threshold_t::authmode (*C++ member*), 689
wifi_scan_threshold_t::rssi (*C++ mem-*

ber), 689
wifi_scan_time_t (C++ struct), 687
wifi_scan_time_t::active (C++ member), 687
wifi_scan_time_t::passive (C++ member), 687
wifi_scan_type_t (C++ enum), 708
wifi_scan_type_t::WIFI_SCAN_TYPE_ACTIVE (C++ enumerator), 708
wifi_scan_type_t::WIFI_SCAN_TYPE_PASSIVE (C++ enumerator), 708
wifi_second_chan_t (C++ enum), 708
wifi_second_chan_t::WIFI_SECOND_CHAN_ABOVE (C++ enumerator), 708
wifi_second_chan_t::WIFI_SECOND_CHAN_BELOW (C++ enumerator), 708
wifi_second_chan_t::WIFI_SECOND_CHAN_NONE (C++ enumerator), 708
WIFI_SOFTAP_BEACON_MAX_LEN (C macro), 685
wifi_sort_method_t (C++ enum), 710
wifi_sort_method_t::WIFI_CONNECT_AP_BY_SECURITY (C++ enumerator), 710
wifi_sort_method_t::WIFI_CONNECT_AP_BY_SIGNAL (C++ enumerator), 710
wifi_sta_config_t (C++ struct), 690
wifi_sta_config_t::bssid (C++ member), 691
wifi_sta_config_t::bssid_set (C++ member), 691
wifi_sta_config_t::btm_enabled (C++ member), 691
wifi_sta_config_t::channel (C++ member), 691
wifi_sta_config_t::listen_interval (C++ member), 691
wifi_sta_config_t::mbo_enabled (C++ member), 691
wifi_sta_config_t::password (C++ member), 691
wifi_sta_config_t::pmf_cfg (C++ member), 691
wifi_sta_config_t::reserved (C++ member), 691
wifi_sta_config_t::rm_enabled (C++ member), 691
wifi_sta_config_t::sae_pwe_h2e (C++ member), 692
wifi_sta_config_t::scan_method (C++ member), 691
wifi_sta_config_t::sort_method (C++ member), 691
wifi_sta_config_t::ssid (C++ member), 691
wifi_sta_config_t::threshold (C++ member), 691
WIFI_STA_DISCONNECTED_PM_ENABLED (C macro), 685
wifi_sta_info_t (C++ struct), 692
wifi_sta_info_t::is_mesh_child (C++ member), 692
wifi_sta_info_t::mac (C++ member), 692
wifi_sta_info_t::phy_11b (C++ member), 692
wifi_sta_info_t::phy_11g (C++ member), 692
wifi_sta_info_t::phy_11n (C++ member), 692
wifi_sta_info_t::phy_lr (C++ member), 692
wifi_sta_info_t::reserved (C++ member), 692
wifi_sta_info_t::rssi (C++ member), 692
wifi_sta_list_t (C++ struct), 692
wifi_sta_list_t::num (C++ member), 692
wifi_sta_list_t::sta (C++ member), 692
WIFI_STATIC_TX_BUFFER_NUM (C macro), 685
WIFI_STATIS_ALL (C macro), 705
WIFI_STATIS_BUFFER (C macro), 704
WIFI_STATIS_DIAG (C macro), 705
WIFI_STATIS_HW (C macro), 705
WIFI_STATIS_PS (C macro), 705
WIFI_STATIS_RXTX (C macro), 705
wifi_storage_t (C++ enum), 710
wifi_storage_t::WIFI_STORAGE_FLASH (C++ enumerator), 710
wifi_storage_t::WIFI_STORAGE_RAM (C++ enumerator), 711
WIFI_TASK_CORE_ID (C macro), 685
WIFI_VENDOR_IE_ELEMENT_ID (C macro), 703
wifi_vendor_ie_id_t (C++ enum), 711
wifi_vendor_ie_id_t::WIFI_VND_IE_ID_0 (C++ enumerator), 711
wifi_vendor_ie_id_t::WIFI_VND_IE_ID_1 (C++ enumerator), 711
wifi_vendor_ie_type_t (C++ enum), 711
wifi_vendor_ie_type_t::WIFI_VND_IE_TYPE_ASSOC_REQ (C++ enumerator), 711
wifi_vendor_ie_type_t::WIFI_VND_IE_TYPE_ASSOC_RES (C++ enumerator), 711
wifi_vendor_ie_type_t::WIFI_VND_IE_TYPE_BEACON (C++ enumerator), 711
wifi_vendor_ie_type_t::WIFI_VND_IE_TYPE_PROBE_REQ (C++ enumerator), 711
wifi_vendor_ie_type_t::WIFI_VND_IE_TYPE_PROBE_RES (C++ enumerator), 711
wl_erase_range (C++ function), 1438
wl_handle_t (C++ type), 1439
WL_INVALID_HANDLE (C macro), 1439
wl_mount (C++ function), 1438
wl_read (C++ function), 1439
wl_sector_size (C++ function), 1439
wl_size (C++ function), 1439
wl_unmount (C++ function), 1438
wl_write (C++ function), 1439

X

xEventGroupClearBits (C++ function), 1595

xEventGroupClearBitsFromISR (*C macro*), 1599
xEventGroupCreate (*C++ function*), 1592
xEventGroupCreateStatic (*C++ function*), 1593
xEventGroupGetBits (*C macro*), 1600
xEventGroupGetBitsFromISR (*C++ function*), 1598
xEventGroupSetBits (*C++ function*), 1596
xEventGroupSetBitsFromISR (*C macro*), 1599
xEventGroupSync (*C++ function*), 1597
xEventGroupWaitBits (*C++ function*), 1594
xMessageBufferCreate (*C macro*), 1609
xMessageBufferCreateStatic (*C macro*), 1610
xMessageBufferIsEmpty (*C macro*), 1616
xMessageBufferIsFull (*C macro*), 1616
xMessageBufferNextLengthBytes (*C macro*), 1616
xMessageBufferReceive (*C macro*), 1613
xMessageBufferReceiveCompletedFromISR (*C macro*), 1617
xMessageBufferReceiveFromISR (*C macro*), 1614
xMessageBufferReset (*C macro*), 1616
xMessageBufferSend (*C macro*), 1611
xMessageBufferSendCompletedFromISR (*C macro*), 1616
xMessageBufferSendFromISR (*C macro*), 1612
xMessageBufferSpaceAvailable (*C macro*), 1616
xMessageBufferSpacesAvailable (*C macro*), 1616
xQueueAddToSet (*C++ function*), 1549
xQueueCreate (*C macro*), 1550
xQueueCreateSet (*C++ function*), 1549
xQueueCreateStatic (*C macro*), 1551
xQueueGenericCreate (*C++ function*), 1548
xQueueGenericCreateStatic (*C++ function*), 1548
xQueueGenericSend (*C++ function*), 1542
xQueueGenericSendFromISR (*C++ function*), 1546
xQueueGiveFromISR (*C++ function*), 1547
xQueueIsQueueEmptyFromISR (*C++ function*), 1548
xQueueIsQueueFullFromISR (*C++ function*), 1548
xQueueOverwrite (*C macro*), 1555
xQueueOverwriteFromISR (*C macro*), 1558
xQueuePeek (*C++ function*), 1543
xQueuePeekFromISR (*C++ function*), 1544
xQueueReceive (*C++ function*), 1544
xQueueReceiveFromISR (*C++ function*), 1547
xQueueRemoveFromSet (*C++ function*), 1549
xQueueReset (*C macro*), 1560
xQueueSelectFromSet (*C++ function*), 1550
xQueueSelectFromSetFromISR (*C++ function*), 1550
xQueueSend (*C macro*), 1554
xQueueSendFromISR (*C macro*), 1559
xQueueSendToBack (*C macro*), 1553
xQueueSendToBackFromISR (*C macro*), 1557
xQueueSendToFront (*C macro*), 1552
xQueueSendToFrontFromISR (*C macro*), 1556
xRingbufferAddToQueueSetRead (*C++ function*), 1633
xRingbufferCanRead (*C++ function*), 1634
xRingbufferCreate (*C++ function*), 1627
xRingbufferCreateNoSplit (*C++ function*), 1628
xRingbufferCreateStatic (*C++ function*), 1628
xRingbufferGetCurFreeSize (*C++ function*), 1633
xRingbufferGetMaxItemSize (*C++ function*), 1633
xRingbufferPrintInfo (*C++ function*), 1634
xRingbufferReceive (*C++ function*), 1630
xRingbufferReceiveFromISR (*C++ function*), 1630
xRingbufferReceiveSplit (*C++ function*), 1630
xRingbufferReceiveSplitFromISR (*C++ function*), 1631
xRingbufferReceiveUpTo (*C++ function*), 1631
xRingbufferReceiveUpToFromISR (*C++ function*), 1632
xRingbufferRemoveFromQueueSetRead (*C++ function*), 1634
xRingbufferSend (*C++ function*), 1628
xRingbufferSendAcquire (*C++ function*), 1629
xRingbufferSendComplete (*C++ function*), 1629
xRingbufferSendFromISR (*C++ function*), 1629
xSemaphoreCreateBinary (*C macro*), 1561
xSemaphoreCreateBinaryStatic (*C macro*), 1561
xSemaphoreCreateCounting (*C macro*), 1571
xSemaphoreCreateCountingStatic (*C macro*), 1572
xSemaphoreCreateMutex (*C macro*), 1568
xSemaphoreCreateMutexStatic (*C macro*), 1569
xSemaphoreCreateRecursiveMutex (*C macro*), 1570
xSemaphoreCreateRecursiveMutexStatic (*C macro*), 1570
xSemaphoreGetMutexHolder (*C macro*), 1573
xSemaphoreGetMutexHolderFromISR (*C macro*), 1573
xSemaphoreGive (*C macro*), 1564
xSemaphoreGiveFromISR (*C macro*), 1566
xSemaphoreGiveRecursive (*C macro*), 1565
xSemaphoreTake (*C macro*), 1562
xSemaphoreTakeFromISR (*C macro*), 1568
xSemaphoreTakeRecursive (*C macro*), 1563

xSTATIC_RINGBUFFER (*C++ struct*), 1634
xStreamBufferBytesAvailable (*C++ function*), 1606
xStreamBufferCreate (*C macro*), 1607
xStreamBufferCreateStatic (*C macro*), 1608
xStreamBufferIsEmpty (*C++ function*), 1605
xStreamBufferIsFull (*C++ function*), 1605
xStreamBufferReceive (*C++ function*), 1603
xStreamBufferReceiveCompletedFromISR (*C++ function*), 1607
xStreamBufferReceiveFromISR (*C++ function*), 1604
xStreamBufferReset (*C++ function*), 1605
xStreamBufferSend (*C++ function*), 1601
xStreamBufferSendCompletedFromISR (*C++ function*), 1606
xStreamBufferSendFromISR (*C++ function*), 1602
xStreamBufferSetTriggerLevel (*C++ function*), 1606
xStreamBufferSpacesAvailable (*C++ function*), 1606
xTaskAbortDelay (*C++ function*), 1517
xTaskCallApplicationTaskHook (*C++ function*), 1526
xTaskCatchUpTicks (*C++ function*), 1537
xTaskCheckForTimeOut (*C++ function*), 1536
xTaskCreate (*C++ function*), 1508
xTaskCreatePinnedToCore (*C++ function*), 1508
xTaskCreateRestricted (*C++ function*), 1512
xTaskCreateRestrictedStatic (*C++ function*), 1513
xTaskCreateStatic (*C++ function*), 1510
xTaskCreateStaticPinnedToCore (*C++ function*), 1510
xTaskDelayUntil (*C++ function*), 1516
xTaskGenericNotify (*C++ function*), 1529
xTaskGenericNotifyFromISR (*C++ function*), 1530
xTaskGenericNotifyStateClear (*C++ function*), 1535
xTaskGenericNotifyWait (*C++ function*), 1532
xTaskGetApplicationTaskTag (*C++ function*), 1525
xTaskGetApplicationTaskTagFromISR (*C++ function*), 1525
xTaskGetHandle (*C++ function*), 1524
xTaskGetIdleTaskHandle (*C++ function*), 1526
xTaskGetTickCount (*C++ function*), 1523
xTaskGetTickCountFromISR (*C++ function*), 1523
xTaskNotify (*C macro*), 1538
xTaskNotifyAndQuery (*C macro*), 1539
xTaskNotifyAndQueryFromISR (*C macro*), 1539
xTaskNotifyAndQueryIndexed (*C macro*), 1539
xTaskNotifyAndQueryIndexedFromISR (*C macro*), 1539
xTaskNotifyFromISR (*C macro*), 1539
xTaskNotifyGive (*C macro*), 1540
xTaskNotifyGiveIndexed (*C macro*), 1539
xTaskNotifyIndexed (*C macro*), 1538
xTaskNotifyIndexedFromISR (*C macro*), 1539
xTaskNotifyStateClear (*C macro*), 1540
xTaskNotifyStateClearIndexed (*C macro*), 1540
xTaskNotifyWait (*C macro*), 1539
xTaskNotifyWaitIndexed (*C macro*), 1539
xTaskResumeAll (*C++ function*), 1522
xTaskResumeFromISR (*C++ function*), 1521
xtensa_perfmon_config (*C++ struct*), 1707
xtensa_perfmon_config::call_function (*C++ member*), 1707
xtensa_perfmon_config::call_params (*C++ member*), 1707
xtensa_perfmon_config::callback (*C++ member*), 1707
xtensa_perfmon_config::callback_params (*C++ member*), 1707
xtensa_perfmon_config::counters_size (*C++ member*), 1708
xtensa_perfmon_config::max_deviation (*C++ member*), 1707
xtensa_perfmon_config::repeat_count (*C++ member*), 1707
xtensa_perfmon_config::select_mask (*C++ member*), 1708
xtensa_perfmon_config::tracelevel (*C++ member*), 1707
xtensa_perfmon_config_t (*C++ type*), 1708
xtensa_perfmon_dump (*C++ function*), 1706
xtensa_perfmon_exec (*C++ function*), 1707
xtensa_perfmon_init (*C++ function*), 1706
xtensa_perfmon_overflow (*C++ function*), 1706
xtensa_perfmon_reset (*C++ function*), 1706
xtensa_perfmon_start (*C++ function*), 1706
xtensa_perfmon_stop (*C++ function*), 1706
xtensa_perfmon_value (*C++ function*), 1706
xtensa_perfmon_view_cb (*C++ function*), 1707
xTimerChangePeriod (*C macro*), 1584
xTimerChangePeriodFromISR (*C macro*), 1590
xTimerCreate (*C++ function*), 1574
xTimerCreateStatic (*C++ function*), 1576
xTimerDelete (*C macro*), 1585
xTimerGetExpiryTime (*C++ function*), 1582
xTimerGetPeriod (*C++ function*), 1582
xTimerGetTimerDaemonTaskHandle (*C++ function*), 1579
xTimerIsTimerActive (*C++ function*), 1579
xTimerPendFunctionCall (*C++ function*), 1581
xTimerPendFunctionCallFromISR (*C++ function*), 1579
xTimerReset (*C macro*), 1585
xTimerResetFromISR (*C macro*), 1591
xTimerStart (*C macro*), 1583

xTimerStartFromISR (*C macro*), 1587
xTimerStop (*C macro*), 1583
xTimerStopFromISR (*C macro*), 1589